Engine Workshop Manual
L8
LF
L3

CONTENTS

Title	Section
General Information	GI
Engine	B
Technical Data	TD
Special Tools	ST

© 2002 Mazda Motor Corporation
PRINTED IN The Netherlands, MARCH 2002
1731–1E–02C

FOREWORD

This manual explains the disassembly, inspection, repair, and reassembly procedures for the above-indicated engine. In order to do these procedures safety, quickly, and correctly, you must first read this manual and any other relevant service materials carefully.

The information in this manual is current up to March, 2002. Any changes that occur after that time will not be reflected in this particular manual. Therefore, the contents of this manual may not exactly match the mechanism that you are currently serving.

Mazda Motor Corporation
HIROSHIMA, JAPAN

WARNING

Servicing a vehicle can be dangerous. If you have not received service-related training, the risks of injury, property damage, and failure of servicing increase. The recommended servicing procedures for the vehicle in this workshop manual were developed with Mazda-trained technicians in mind. This manual may be useful to non-Mazda trained technicians, but a technician with our service-related training and experience will be at less risk when performing service operations. However, all users of this manual are expected to at least know general safety procedures.

This manual contains "Warnings" and "Cautions" applicable to risks not normally encountered in a general technician's experience. They should be followed to reduce the risk of injury and the risk that improper service or repair may damage the vehicle or render it unsafe. It is also important to understand that the "Warnings" and "Cautions" are not exhaustive. It is impossible to warn of all the hazardous consequences that might result from failure to follow the procedures.

The procedures recommended and described in this manual are effective methods of performing service and repair. Some require tools specifically designed for a specific purpose. Persons using procedures and tools which are not recommended by Mazda Motor Corporation must satisfy themselves thoroughly that neither personal safety nor safety of the vehicle will be jeopardized.

The contents of this manual, including drawings and specifications, are the latest available at the time of printing, and Mazda Motor Corporation reserves the right to change the vehicle designs and alter the contents of this manual without notice and without incurring obligation.

Parts should be replaced with genuine Mazda replacement parts or with parts which match the quality of genuine Mazda replacement parts. Persons using replacement parts of lesser quality than that of genuine Mazda replacement parts must satisfy themselves thoroughly that neither personal safety nor safety of the vehicle will be jeopardized.

Mazda Motor Corporation is not responsible for any problems which may arise from the use of this manual. The cause of such problems includes but is not limited to insufficient service-related training, use of improper tools, use of replacement parts of lesser quality than that of genuine Mazda replacement parts, or not being aware of any revision of this manual.

GENERAL INFORMATION

HOW TO USE THIS MANUAL GI-2
RANGE OF TOPICS GI-2
SERVICE PROCEDURE GI-2
SYMBOLS GI-3
ADVISORY MESSAGES GI-4
UNITS GI-5
UNITS GI-5
FUNDAMENTAL PROCEDURES GI-6
PREPARATION OF TOOLS AND MEASURING EQUIPMENT GI-6
SPECIAL SERVICE TOOLS GI-6
DISASSEMBLY GI-6
INSPECTION DURING REMOVAL, DISASSEMBLY GI-7
ARRANGEMENT OF PARTS GI-7
CLEANING OF PARTS GI-7
REASSEMBLY GI-7
ADJUSTMENT GI-8
RUBBER PARTS AND TUBING GI-8
HOSE CLAMPS GI-8
TORQUE FORMULAS GI-9
VISE GI-9
SST GI-9
ELECTRICAL SYSTEM GI-10
ELECTRICAL PARTS GI-10
CONNECTORS GI-10
NEW STANDARDS GI-13
NEW STANDARDS GI-13
ABBREVIATIONS GI-15
ABBREVIATIONS GI-15

HOW TO USE THIS MANUAL

RANGE OF TOPICS

A6E201000001E01

- This manual contains procedures for performing all required service operations. The procedures are divided into the following five basic operations:
  — Removal/Installation
  — Disassembly/Assembly
  — Replacement
  — Inspection
  — Adjustment
- Simple operations which can be performed easily just by looking at the vehicle (i.e., removal/installation of parts, jacking, vehicle lifting, cleaning of parts and visual inspection) have been omitted.

SERVICE PROCEDURE

A6E201000001E02

Inspection, adjustment

- Inspection and adjustment procedures are divided into steps. Important points regarding the location and contents of the procedures are explained in detail and shown in the illustrations.

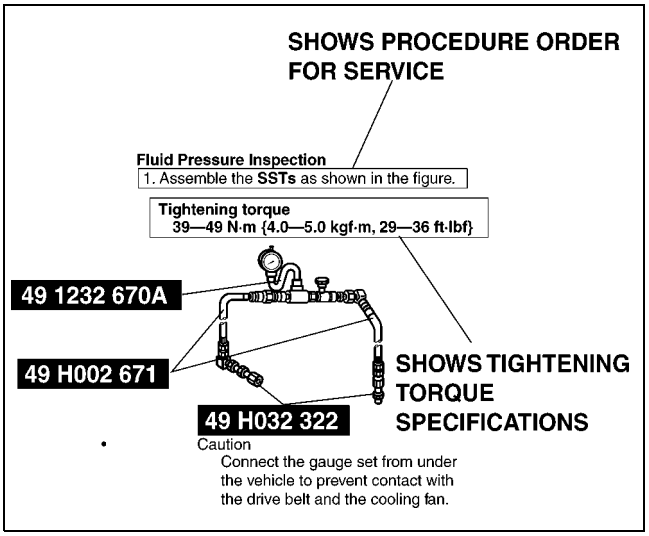

XME2010001

Repair procedure

1. Most repair operations begin with an overview illustration. It identifies the components, shows how the parts fit together and describes visual part inspection. However, only removal/installation procedures that need to be performed methodically have written instructions.
2. Expendable parts, tightening torques and symbols for oil, grease, and sealant are shown in the overview illustration. In addition, symbols indicating parts requiring the use of special service tools or equivalent are also shown.
3. Procedure steps are numbered and the part that is the main point of that procedure is shown in the illustration with the corresponding number. Occasionally, there are important points or additional information concerning a procedure. Refer to this information when servicing the related part.

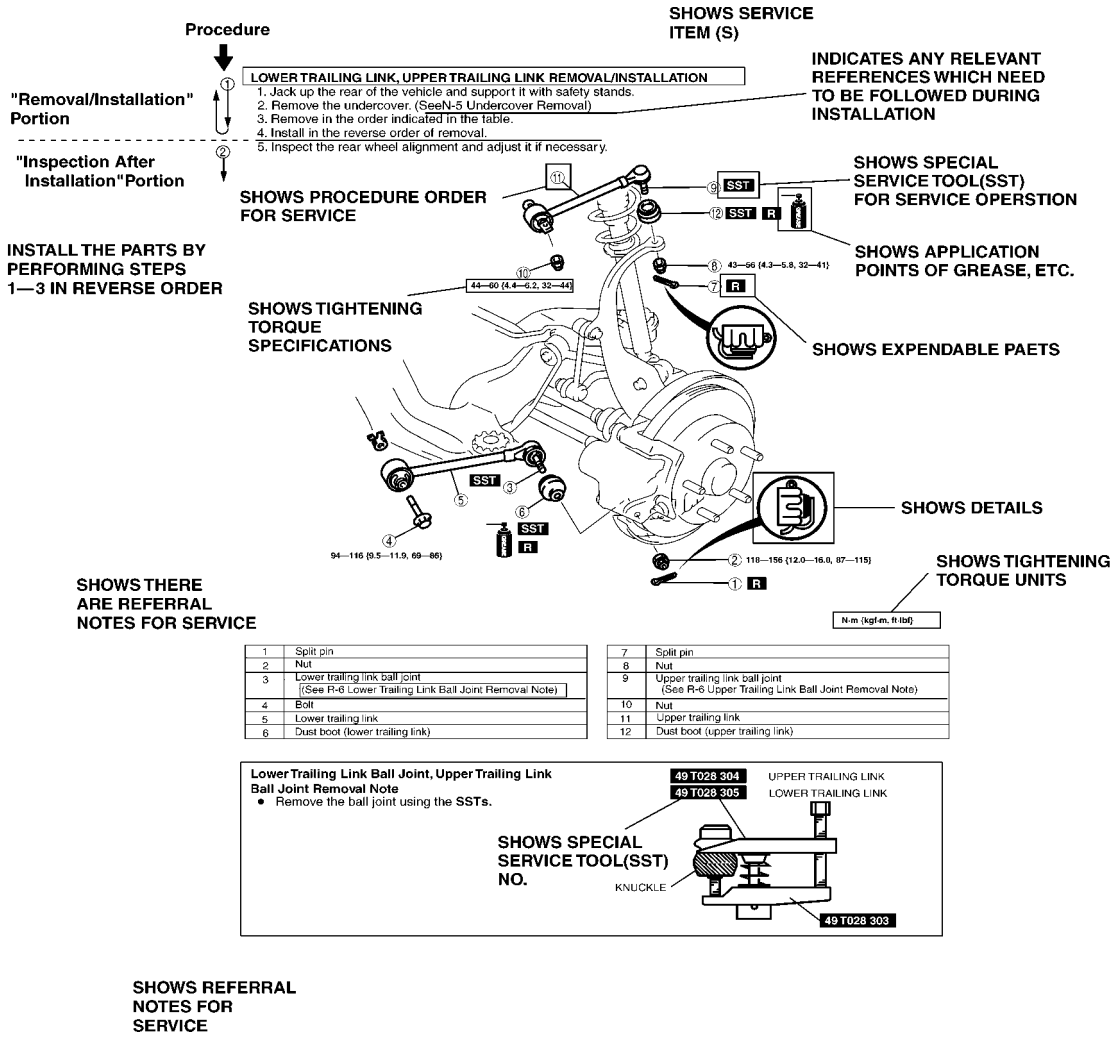

XME2010010

SYMBOLS

A6E201000001E03

- There are eight symbols indicating oil, grease, fluids, sealant, and **SST** or equivalent use. These symbols show application points or use of these materials during service.

Symbol	Meaning	Kind
	Apply oil	New appropriate engine oil or gear oil
	Apply brake fluid	New appropriate brake fluid

Symbol	Meaning	Kind
	Apply automatic transaxle/ transmission fluid	New appropriate automatic transaxle/ transmission fluid
	Apply grease	Appropriate grease
	Apply sealant	Appropriate sealant
	Apply petroleum jelly	Appropriate petroleum jelly
	Replace part	O-ring, gasket, etc.
	Use SST or equivalent	Appropriate tools

ADVISORY MESSAGES

A6E201000001E04

- You'll find several **Warnings**, **Cautions**, **Notes**, **Specifications** and **Upper and Lower Limits** in this manual.

Warning

- A Warning indicates a situation in which serious injury or death could result if the warning is ignored.

Caution

- A Caution indicates a situation in which damage to the vehicle or parts could result if the caution is ignored.

Note

- A Note provides added information that will help you to complete a particular procedure.

Specification

- The values indicate the allowable range when performing inspections or adjustments.

Upper and lower limits

- The values indicate the upper and lower limits that must not be exceeded when performing inspections or adjustments.

UNITS

UNITS

A6E201200002E01

Electrical current	A (ampere)
Electric power	W (watt)
Electric resistance	ohm
Electric voltage	V (volt)
Length	mm (millimeter)
	in (inch)
Negative pressure	kPa (kilo pascal)
	mmHg (millimeters of mercury)
	inHg (inches of mercury)
Positive pressure	kPa (kilo pascal)
	kgf/cm^2 (kilogram force per square centimeter)
	psi (pounds per square inch)
Torque	N·m (Newton meter)
	kgf·m (kilogram force meter)
	kgf·cm (kilogram force centimeter)
	ft·lbf (foot pound force)
	in·lbf (inch pound force)
Volume	L (liter)
	US qt (U.S. quart)
	Imp qt (Imperial quart)
	ml (milliliter)
	cc (cubic centimeter)
	cu in (cubic inch)
	fl oz (fluid ounce)
Weight	g (gram)
	oz (ounce)

Conversion to SI Units (Système International d'Unités)

- All numerical values in this manual are based on SI units. Numbers shown in conventional units are converted from these values.

Rounding Off

- Converted values are rounded off to the same number of places as the SI unit value. For example, if the SI unit value is 17.2 and the value after conversion is 37.84, the converted value will be rounded off to 37.8.

Upper and Lower Limits

- When the data indicates upper and lower limits, the converted values are rounded down if the SI unit value is an upper limit and rounded up if the SI unit value is a lower limit. Therefore, converted values for the same SI unit value may differ after conversion. For example, consider 2.7 kgf/cm^2 in the following specifications:

  210—260 kPa {2.1—2.7 kgf/cm^2, 30—38 psi}
  270—310 kPa {2.7—3.2 kgf/cm^2, 39—45 psi}

- The actual converted values for 2.7 kgf/cm^2 are 264 kPa and 38.4 psi. In the first specification, 2.7 is used as an upper limit, so the converted values are rounded down to 260 and 38. In the second specification, 2.7 is used as a lower limit, so the converted values are rounded up to 270 and 39.

FUNDAMENTAL PROCEDURES

PREPARATION OF TOOLS AND MEASURING EQUIPMENT

- Be sure that all necessary tools and measuring equipment are available before starting any work.

A6E201400004E02

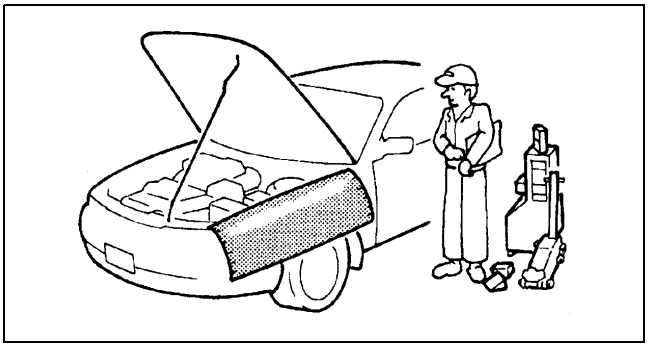

X3U000WAH

SPECIAL SERVICE TOOLS

- Use special service tools or equivalent when they are required.

A6E201400004E03

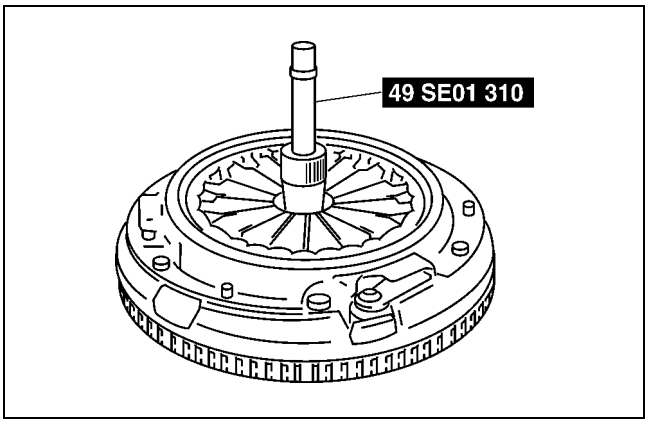

X3U000WAJ

DISASSEMBLY

- If the disassembly procedure is complex, requiring many parts to be disassembled, all parts should be marked in a place that will not affect their performance or external appearance and identified so that reassembly can be performed easily and efficiently.

A6E201400004E07

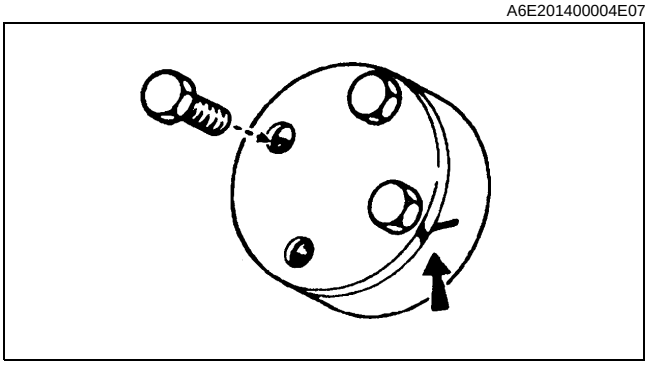

X3U000WAL

INSPECTION DURING REMOVAL, DISASSEMBLY

- When removed, each part should be carefully inspected for malfunction, deformation, damage, and other problems.

A6E201400004E08

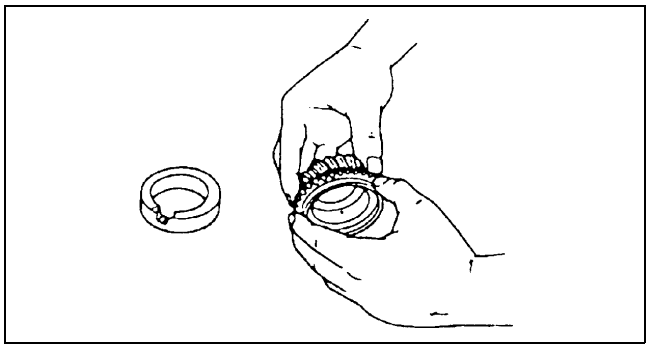

X3U000WAM

ARRANGEMENT OF PARTS

- All disassembled parts should be carefully arranged for reassembly.
- Be sure to separate or otherwise identify the parts to be replaced from those that will be reused.

A6E201400004E09

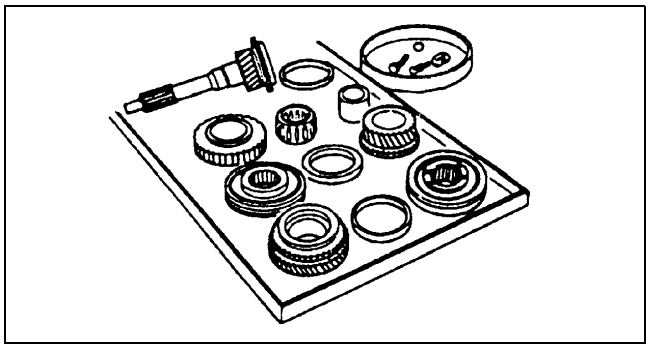

X3U000WAN

CLEANING OF PARTS

- All parts to be reused should be carefully and thoroughly cleaned in the appropriate method.

  Warning
  - **Using compressed air can cause dirt and other particles to fly out causing injury to the eyes. Wear protective eye wear whenever using compressed air.**

A6E201400004E10

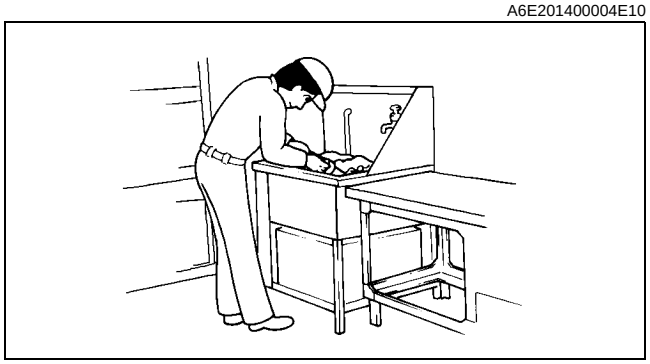

WGIWXX0030J

REASSEMBLY

- Standard values, such as torques and certain adjustments, must be strictly observed in the reassembly of all parts.
- If removed, these parts should be replaced with new ones:
  — Oil seals
  — Gaskets
  — O-rings
  — Lockwashers
  — Cotter pins
  — Nylon nuts

A6E201400004E11

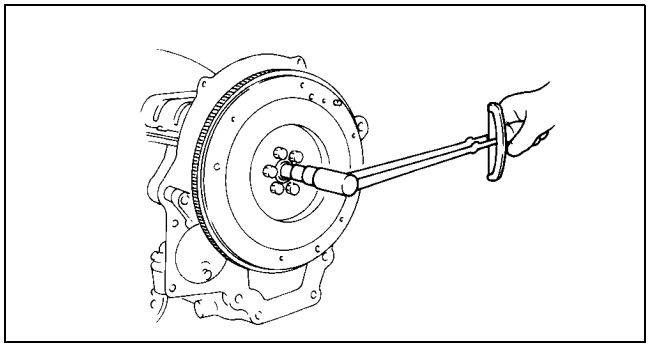

WGIWXX0031J

- Depending on location:
  — Sealant and gaskets, or both, should be applied to specified locations. When sealant is applied, parts should be installed before sealant hardens to prevent leakage.
  — Oil should be applied to the moving components of parts.
  — Specified oil or grease should be applied at the prescribed locations (such as oil seals) before reassembly.

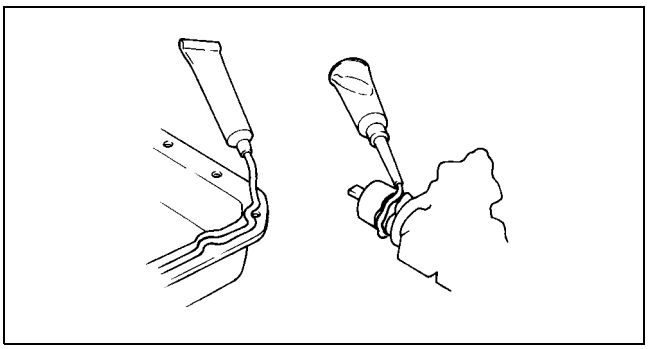

WGIWXX0032J

ADJUSTMENT

A6E201400004E12

- Use suitable gauges and/or testers when making adjustments.

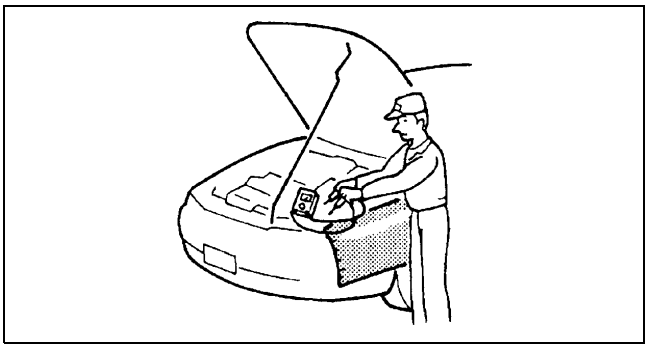

X3U000WAS

RUBBER PARTS AND TUBING

A6E201400004E13

- Prevent gasoline or oil from getting on rubber parts or tubing.

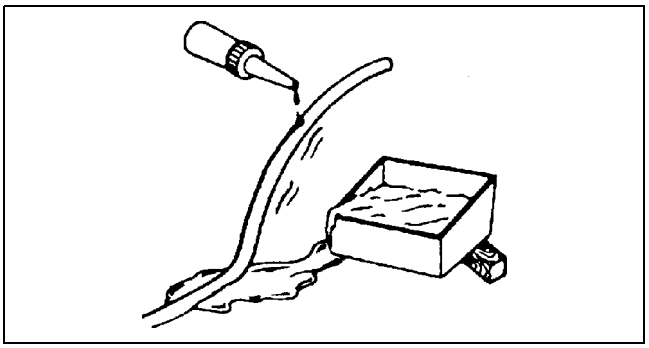

WGIWXX0034E

HOSE CLAMPS

A6E201400004E14

- When reinstalling, position the hose clamp in the original location on the hose and squeeze the clamp lightly with large pliers to ensure a good fit.

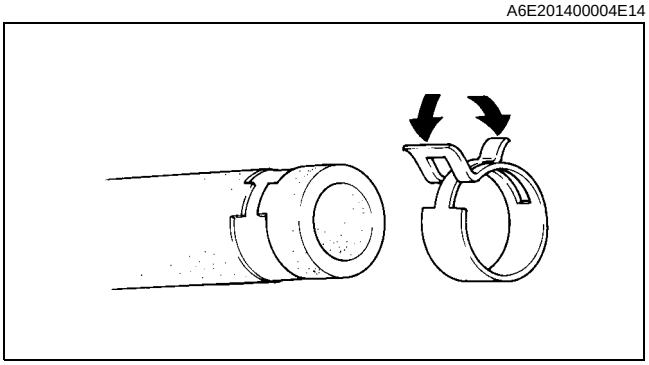

WGIWXX0035J

TORQUE FORMULAS

- When using a torque wrench-**SST** or equivalent combination, the written torque must be recalculated due to the extra length that the **SST** or equivalent adds to the torque wrench. Recalculate the torque using the following formulas. Choose the formula that applies to you.

Torque Unit	Formula
N·m	N·m × [L/(L+A)]
kgf·m	kgf·m × [L/(L+A)]
kgf·cm	kgf·cm × [L/(L+A)]
ft·lbf	ft·lbf × [L/(L+A)]
in·lbf	in·lbf × [L/(L+A)]

A : The length of the **SST** past the torque wrench drive
L : The length of the torque wrench

A6E201400004E15

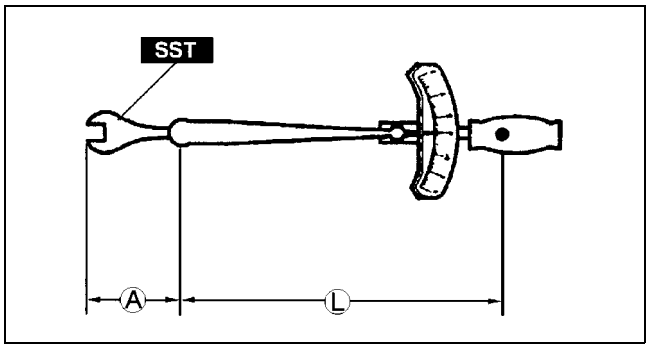

WGIWXX0036E

VISE

- When using a vise, put protective plates in the jaws of the vise to prevent damage to parts.

A6E201400004E16

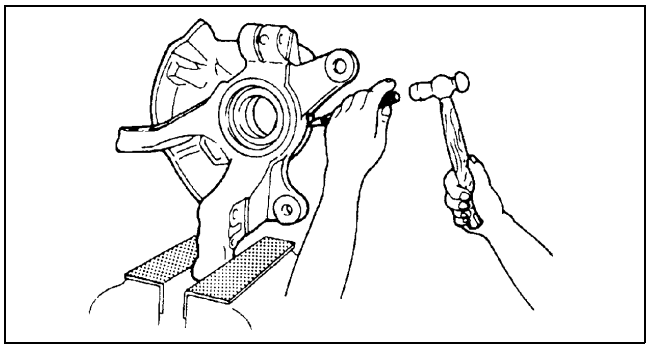

X3U000WAW

SST

A6E201400004E18

- Some Ford **SST** or equivalent are used as **SSTs** necessary for engine repair. Note that these **SSTs** are marked with Ford **SST** numbers.
- Note that a Ford **SST** number is written together with a corresponding Mazda **SST** number as shown below.

Example (section ST)

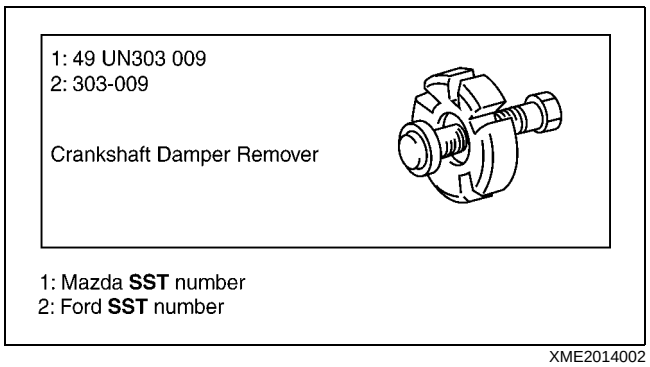

XME2014002

Example (except section ST)

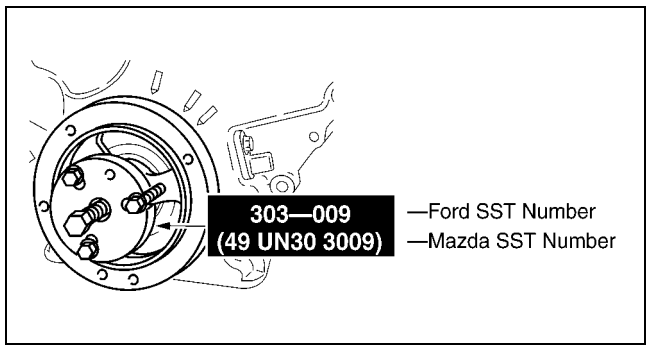

XME2014001

ELECTRICAL SYSTEM

ELECTRICAL PARTS

A6E201700006E01

Battery cable

- Before disconnecting connectors or removing electrical parts, disconnect the negative battery cable.

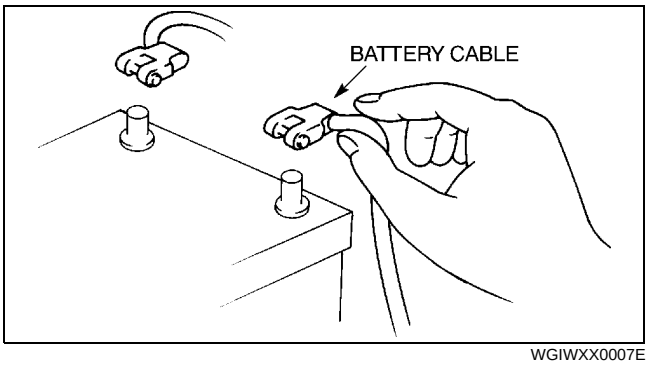

WGIWXX0007E

Wiring Harness

- To remove the wiring harness from the clip in the engine room, pry up the hook of the clip using a flathead screwdriver.

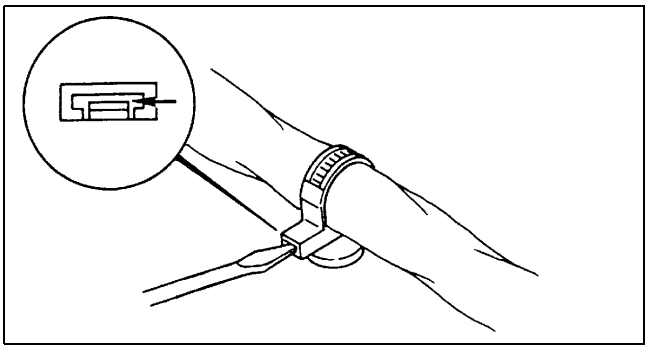

X3U000WBU

CONNECTORS

A6E201700006E02

Data link connector

- Insert the probe into the terminal when connecting a jumper wire to the data link connector.

Caution

- **Inserting a jumper wire probe into the data link connector terminal may damage the terminal.**

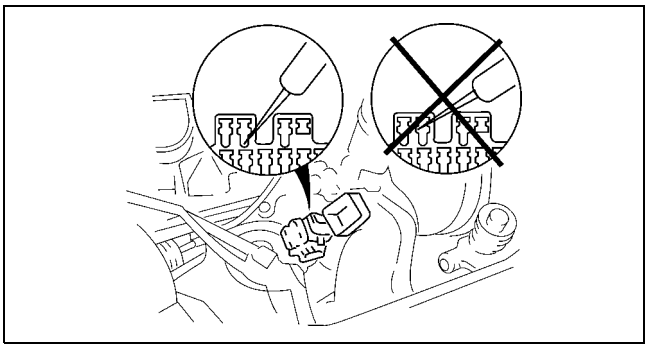

X3U000WAY

Disconnecting connectors

- When disconnecting connector, grasp the connectors, not the wires.

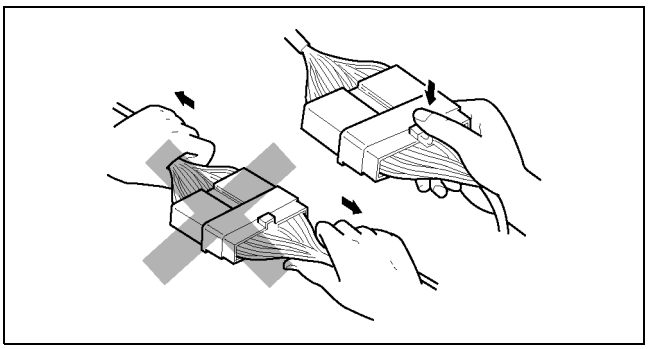

WGIWXX0041E

- Connectors can be disconnected by pressing or pulling the lock lever as shown.

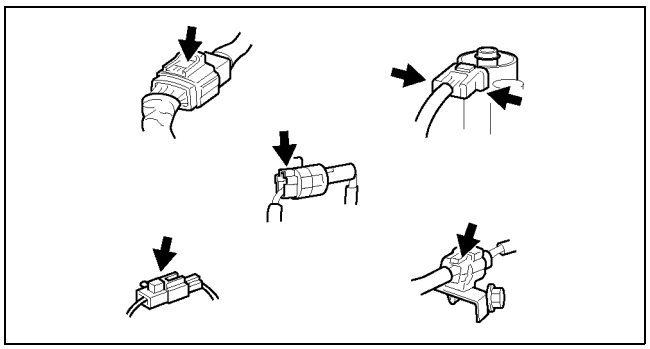

WGIWXX0042E

Locking connector

- When locking connectors, listen for a click indicating they are securely locked.

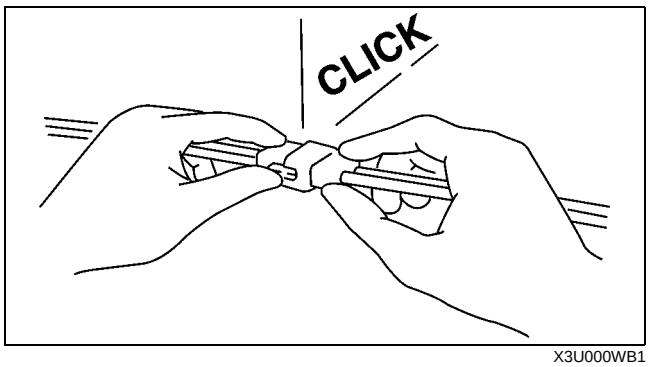

X3U000WB1

Inspection

- When a tester is used to inspect for continuity or measuring voltage, insert the tester probe from the wiring harness side.

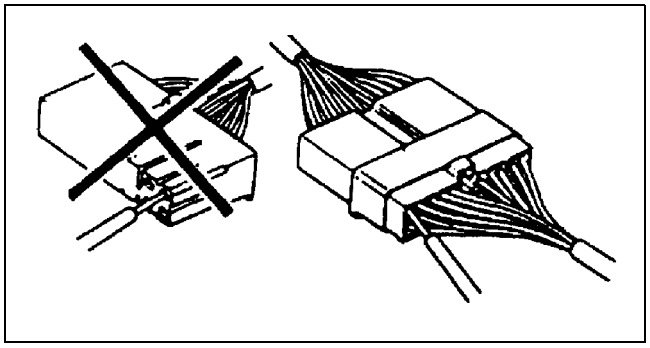

X3U000WB2

- Inspect the terminals of waterproof connectors from the connector side since they cannot be accessed from the wiring harness side.

  Caution

  - **To prevent damage to the terminal, wrap a thin wire around the tester probe before inserting into terminal.**

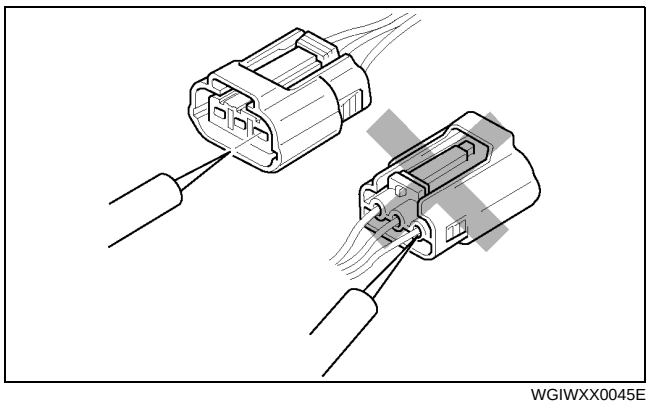

WGIWXX0045E

Terminals
Inspection

- Pull lightly on individual wires to verify that they are secured in the terminal.

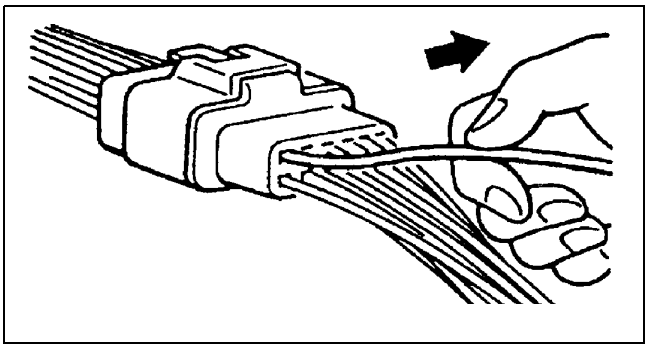

X3U000WB4

Wiring Harness
Wiring color codes

- Two-color wires are indicated by a two-color code symbol.
- The first letter indicates the base color of the wire and the second the color of the stripe.

CODE	COLOR	CODE	COLOR
B	Black	O	Orange
BR	Brown	P	Pink
G	Green	R	Red
GY	Gray	V	Violet
L	Blue	W	White
LB	Light Blue	Y	Yellow
LG	Light Green		

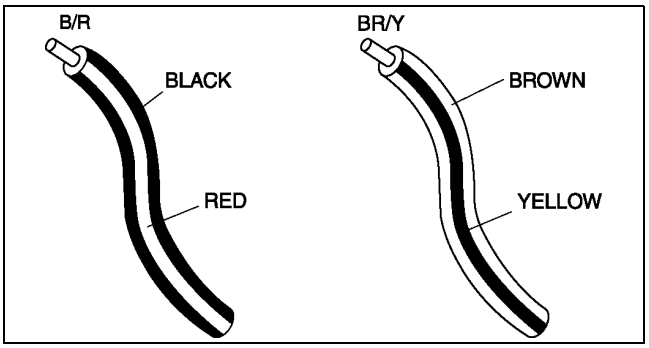

X3U000WB7

NEW STANDARDS

NEW STANDARDS

A6E202800020E01

- Following is a comparison of the previous standard and the new standard.

New Standard		Previous Standard		Remark
Abbreviation	Name	Abbreviation	Name	
AP	Accelerator Pedal	—	Accelerator Pedal	
ACL	Air Cleaner	—	Air Cleaner	
A/C	Air Conditioning	—	Air Conditioning	
BARO	Barometric Pressure	—	Atmospheric Pressure	
B+	Battery Positive Voltage	Vb	Battery Voltage	
—	Brake Switch	—	Stoplight Switch	
—	Calibration Resistor	—	Corrected Resistance	#6
CMP sensor	Camshaft Position Sensor	—	Crank Angle Sensor	
CAC	Charge Air Cooler	—	Intercooler	
CLS	Closed Loop System	—	Feedback System	
CTP	Closed Throttle Position	—	Fully Closed	
CPP	Clutch Pedal Position	—	Idle Switch	
CIS	Continuous Fuel Injection System	—	Clutch Position	
CS sensor	Control Sleeve Sensor	CSP sensor	Control Sleeve Position Sensor	#6
CKP sensor	Crankshaft Position Sensor	—	Crank Angle Sensor 2	
DLC	Data Link Connector	—	Diagnosis Connector	
DTM	Diagnostic Test Mode	—	Test Mode	#1
DTC	Diagnostic Trouble Code(s)	—	Service Code(s)	
DI	Distributor Ignition	—	Spark Ignition	
DLI	Distributorless Ignition	—	Direct Ignition	
EI	Electronic Ignition	—	Electronic Spark Ignition	#2
ECT	Engine Coolant Temperature	—	Water Thermo	
EM	Engine Modification	—	Engine Modification	
—	Engine Speed Input Signal	—	Engine RPM Signal	
EVAP	Evaporative Emission	—	Evaporative Emission	
EGR	Exhaust Gas Recirculation	—	Exhaust Gas Recirculation	
FC	Fan Control	—	Fan Control	
FF	Flexible Fuel	—	Flexible Fuel	
4GR	Fourth Gear	—	Overdrive	
—	Fuel Pump Relay	—	Circuit Opening Relay	#3
FSO solenoid	Fuel Shut Off Solenoid	FCV	Fuel Cut Valve	#6
GEN	Generator	—	Alternator	
GND	Ground	—	Ground/Earth	
HO2S	Heated Oxygen Sensor	—	Oxygen Sensor	With heater
IAC	Idle Air control	—	Idle Speed Control	
—	IDM Relay	—	Spill Valve Relay	#6
—	Incorrect Gear Ratio	—	—	
—	Injection Pump	FIP	Fuel Injection Pump	#6
—	Input/Turbine Speed Sensor	—	Pulse Generator	
IAT	Intake Air Temperature	—	Intake Air Thermo	
KS	Knock Sensor	—	Knock Sensor	
MIL	Malfunction Indicator Lamp	—	Malfunction Indicator Light	
MAP	Manifold Absolute Pressure	—	Intake Air Pressure	
MAF sensor	Mass Air Flow Sensor	—	Airflow Sensor	
MFL	Multiport Fuel Injection	—	Multiport Fuel Injection	
OBD	On-Board Diagnostic	—	Diagnosis/SelfDiagnosis	
OL	Open Loop	—	Open Loop	

New Standard		Previous Standard		Remark
Abbrevi-ation	Name	Abbrevi-ation	Name	
—	Output Speed Sensor	—	Vehicle Speed Sensor 1	
OC	Oxidation Catalytic Converter	—	Catalytic Converter	
O2S	Oxygen Sensor	—	Oxygen Sensor	
PNP	Park/Neutral Position	—	Park/Neutral Range	
—	PCM Control Relay	—	Main Relay	#6
PSP	Power Steering Pressure	—	Power Steering Pressure	
PCM	Powertrain Control Module	ECU	Engine Control Unit	#4
—	Pressure Control Solenoid	—	Line Pressure Solenoid Valve	
PAIR	Pulsed Secondary Air Injection	—	Secondary Air Injection System	Pulsed injection
—	Pump Speed Sensor	—	NE Sensor	#6
AIR	Secondary Air Injection	—	Secondary Air Injection System	Injection with air pump
SAPV	Secondary Air Pulse Valve	—	Reed Valve	
SFI	Sequential Multipoint Fuel Injection	—	Sequential Fuel Injection	
—	Shift Solenoid A	—	1–2 Shift Solenoid Valve	
		—	Shift A Solenoid Valve	
—	Shift Solenoid B	—	2–3 Shift Solenoid Valve	
		—	Shift B Solenoid Valve	
—	Shift Solenoid C	—	3–4 Shift Solenoid Valve	
3GR	Third Gear	—	3rd Gear	
TWC	Three Way Catalytic Converter	—	Catalytic Converter	
TB	Throttle Body	—	Throttle Body	
TP sensor	Throttle Position Sensor	—	Throttle Sensor	
TCV	Timer Control Valve	TCV	Timing Control Valve	#6
TCC	Torque Converter Clutch	—	Lockup Position	
TCM	Transmission (Transaxle) Control Module	—	ECAT Control Unit	
—	Transmission (Transaxle) Fluid Temperature Sensor	—	ATF Thermosensor	
TR	Transmission (Transaxle) Range	—	Inhibitor Position	
TC	Turbocharger	—	Turbocharger	
VSS	Vehicle Speed Sensor	—	Vehicle Speed Sensor	
VR	Voltage Regulator	—	IC Regulator	
VAF sensor	Volume Air Flow Sensor	—	Air flow Sensor	
WUTWC	Warm Up Three Way Catalytic Converter	—	Catalytic Converter	#5
WOT	Wide Open Throttle	—	Fully Open	

#1 : Diagnostic trouble codes depend on the diagnostic test mode
#2 : Controlled by the PCM
#3 : In some models, there is a fuel pump relay that controls pump speed. That relay is now called the fuel pump relay (speed).
#4 : Device that controls engine and powertrain
#5 : Directly connected to exhaust manifold
#6 : Part name of diesel engine

ABBREVIATIONS

ABBREVIATIONS

A6E203000011E01

MTX	Manual transaxle
ATX	Automatic transaxle
ATDC	After top dead center
TDC	Top dead center
IN	Intake
EX	Exhaust
EGR	Exhaust gas recirculation
OCV	Oil control valve
SST	Special service tool

ENGINE

ENGINE B-2
ENGINE OVERHAUL SERVICE WARNING B-2
ENGINE MOUNTING/DISMOUNTING B-2
TIMING CHAIN DISASSEMBLY B-3
CYLINDER HEAD (I) DISASSEMBLY B-5
CYLINDER HEAD (II) DISASSEMBLY B-7
CYLINDER BLOCK (I) DISASSEMBLY B-9
CYLINDER BLOCK (II) DISASSEMBLY B-10
CYLINDER HEAD INSPECTION B-11
VALVE, VALVE GUIDE INSPECTION B-12
VALVE GUIDE REPLACEMENT B-13
VALVE SEAT INSPECTION/REPAIR B-15
VALVE SPRING INSPECTION B-15
CAMSHAFT INSPECTION B-16
TAPPET INSPECTION B-17
CYLINDER BLOCK INSPECTION B-18
OIL JET VALVE INSPECTION B-19
PISTON INSPECTION B-19
CRANKSHAFT INSPECTION B-20
CONNECTING ROD INSPECTION B-22
BOLT INSPECTION B-22
VARIABLE VALVE TIMING ACTUATOR INSPECTION B-23
OIL CONTROL VALVE (OCV) INSPECTION B-23
VALVE CLEARANCE INSPECTION B-24
VALVE CLEARANCE ADJUSTMENT B-25
CYLINDER BLOCK (I) ASSEMBLY B-29
CYLINDER BLOCK (II) ASSEMBLY B-34
CYLINDER HEAD (I) ASSEMBLY B-37
CYLINDER HEAD (II) ASSEMBLY B-39
TIMING CHAIN ASSEMBLY B-41

ENGINE

ENGINE OVERHAUL SERVICE WARNING

A6E242402000E01

Warning
- **Continuous exposure with USED engine oil has caused skin cancer in laboratory mice. Protect your skin by washing with soap and water immediately after this work.**

ENGINE MOUNTING/DISMOUNTING

A6E242402000E02

1. Install the **SSTs** (arms) to the cylinder block holes as shown, and hand-tighten the bolts **(part No.: 9YA20-1003) or M10×1.5T length 90 mm {3.55 in}**.

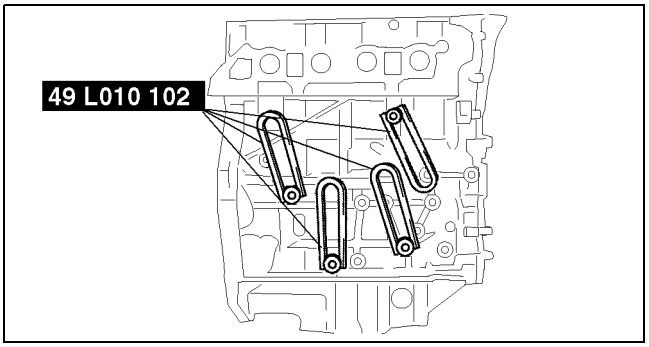

AME2224E065

2. Assemble the **SSTs** (bolts, nuts and plate) to the specified positions.
3. Adjust the **SSTs** (bolts) so that less than **20 mm {0.79 in}** of thread is exposed.
4. Make the **SSTs** (arms and plate) parallel by adjusting the **SSTs** (bolts and nuts).

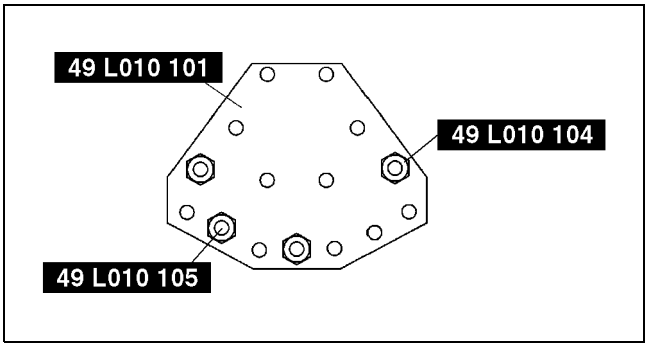

AME2224E300

5. Tighten the **SSTs** (bolts and nuts) to affix the **SSTs** firmly.

Warning
- **Self-locking brake system of the engine stand may not be effective when the engine is held in an unbalanced position. This could lead to sudden, rapid movement of the engine and mounting stand handle and cause serious injury. Never keep the engine in an unbalanced position, and always hold the rotating handle firmly when turning the engine.**

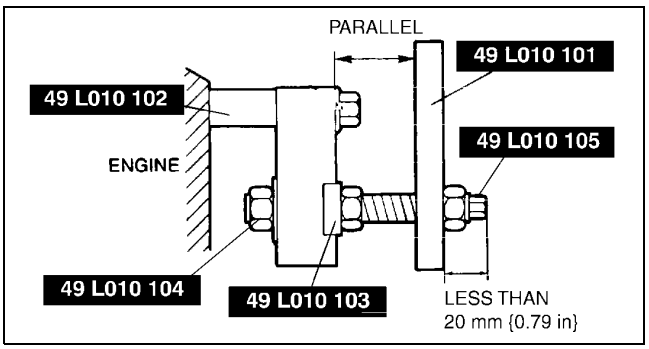

AME2224E301

6. Mount the engine on the **SST** (engine stand).
7. Drain the engine oil into a container.
8. Clean the flange surface (seal rubber) of the oil pan drain plug, then install the oil pan drain plug.

Tightening torque
20—30 N·m {2.1—3.0 kgf·m, 15—22 ft·lbf}

DISMOUNTING

- Dismount in the reverse order of mounting.

TIMING CHAIN DISASSEMBLY

A6E242402000E04

1. Disassemble in the order indicated in the table.

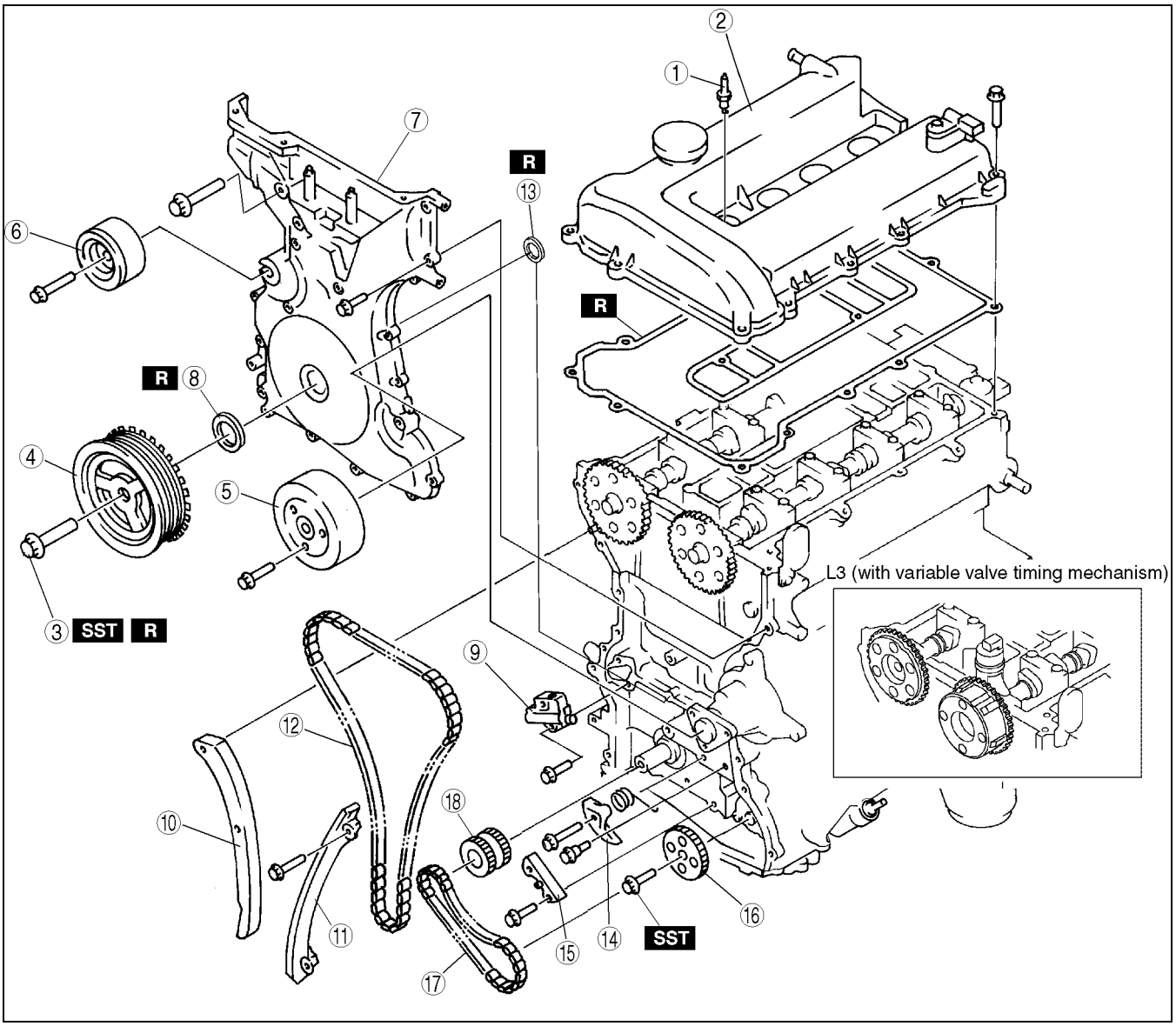

AME2224E337

1	Spark plug
2	Cylinder head cover
3	Crankshaft pulley lock bolt (See B–4 Crankshaft Pulley Lock Bolt Disassembly Note)
4	Crankshaft pulley
5	Water pump pulley
6	Drive belt idler pulley
7	Engine front cover
8	Front oil seal (See B–4 Front Oil Seal Disassembly Note)

9	Chain tensioner (See B–4 Chain Tensioner Disassembly Note)
10	Tensioner arm
11	Chain guide
12	Timing chain
13	Seal (L3 (with variable valve timing mechanism))
14	Oil pump chain tensioner
15	Oil pump chain guide
16	Oil pump sprocket (See B–4 Oil Pump Sprocket Disassembly Note)
17	Oil pump chain
18	Crankshaft sprocket

Crankshaft Pulley Lock Bolt Disassembly Note

1. Hold the crankshaft using the SST.
2. Remove the crankshaft pulley lock bolt.

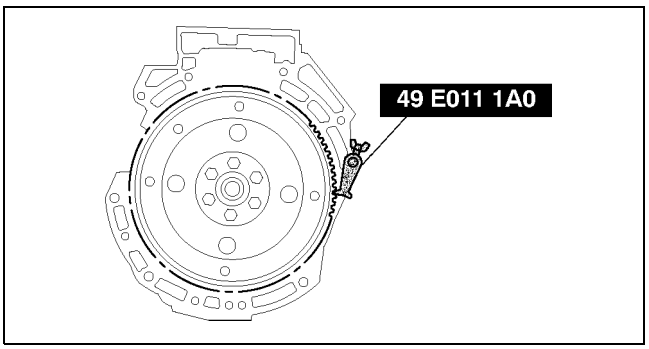

AME2224E106

Front Oil Seal Disassembly Note

1. Remove the oil seal using a screwdriver.

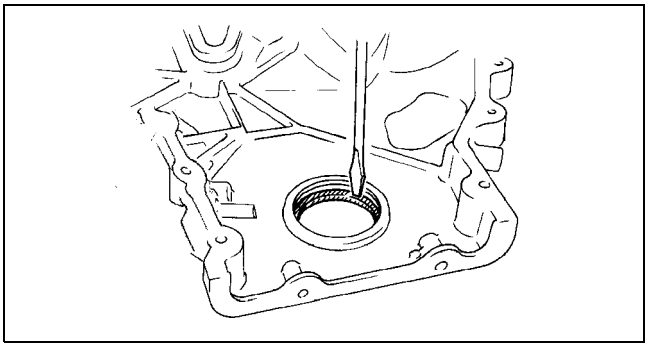

AME2224E338

Chain Tensioner Disassembly Note

1. Hold the chain tensioner ratchet lock mechanism away from the ratchet stem with a thin screwdriver.
2. Slowly press the tensioner piston.
3. Hold the chain tensioner piston with a **1.5 mm {0.06 in}** wire or paper clip.

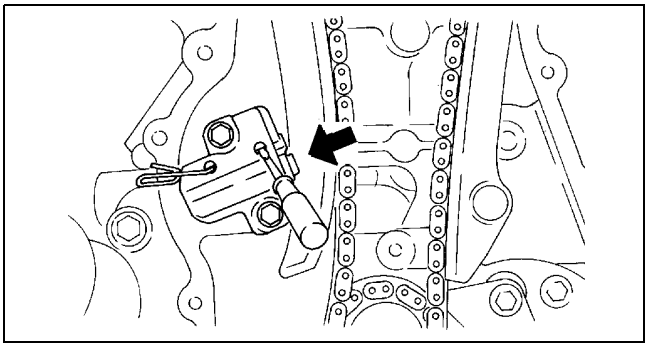

AME2224E339

Oil Pump Sprocket Disassembly Note

1. Hold the oil pump sprocket using the **SST**.

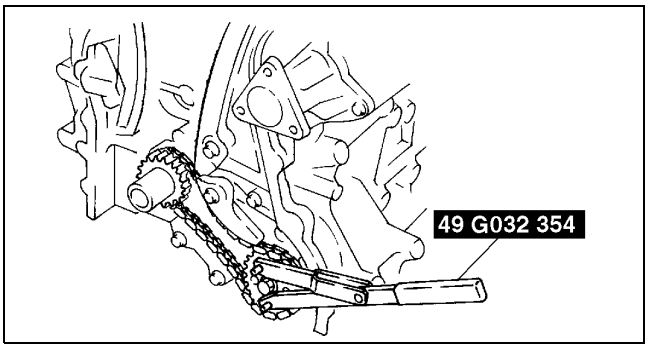

AME2224E340

CYLINDER HEAD (I) DISASSEMBLY

A6E242402000E05

1. Disassemble in the order indicated in the table.

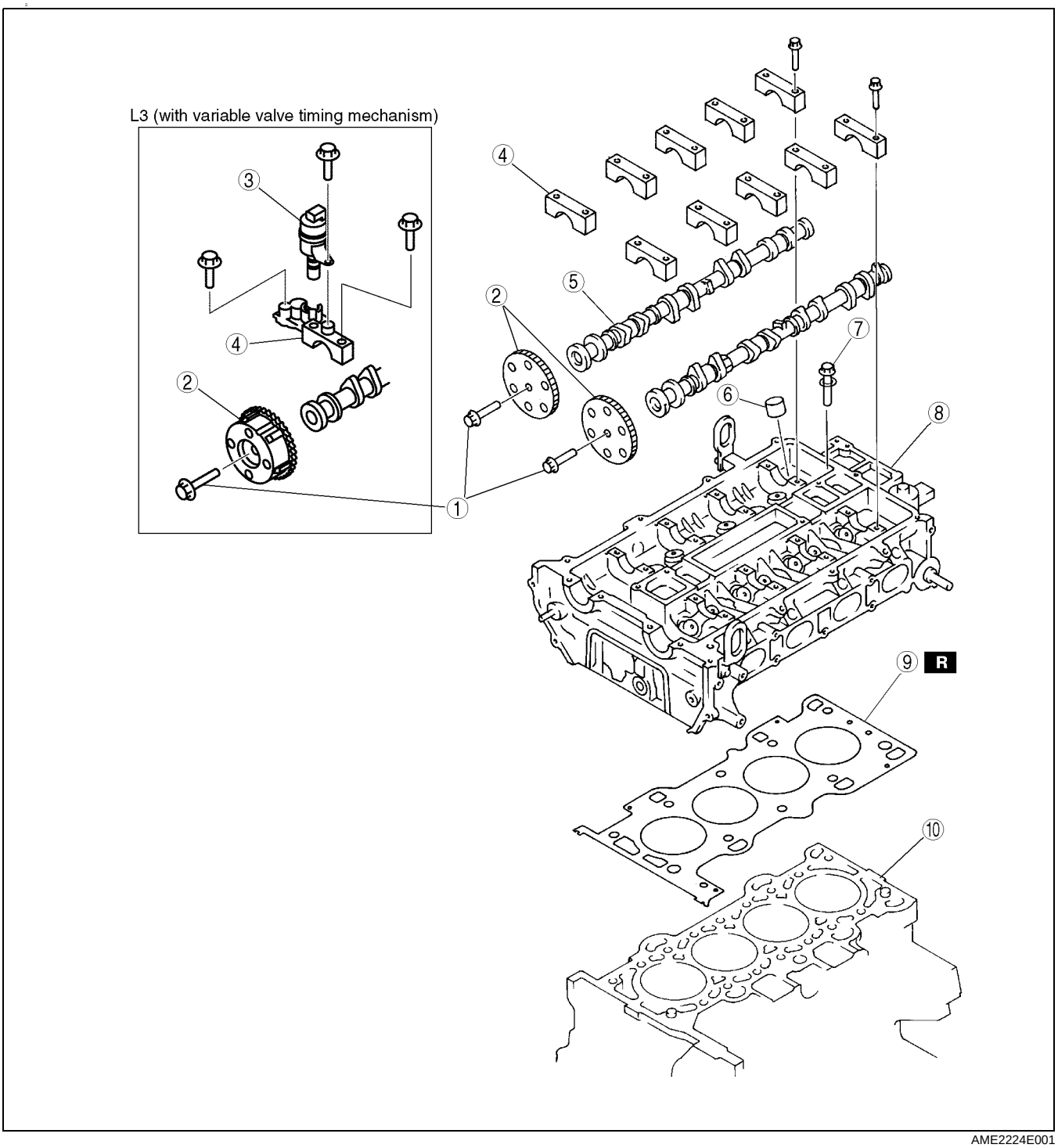

AME2224E001

1	Camshaft sprocket lock bolt,Variable valve timing actuator lock bolt (L3 (with variable valve timing mechanism)) (See B–6 Camshaft Sprocket Lock Bolt, Variable Valve Timing Actuator Lock Bolt (L3 (with variable valve timing mechanism)) Disassembly Note)
2	Camshaft sprocket,Variable valve timing actuator (L3 (with variable valve timing mechanism))
3	Oil control valve (OCV) (L3 (with variable valve timing mechanism))

4	Camshaft cap (See B–6 Camshaft Cap Disassembly Note)
5	Camshaft
6	Tappet (See B–7 Tappet Disassembly Note)
7	Cylinder head bolt (See B–7 Cylinder Head Bolt Disassembly Note)
8	Cylinder head
9	Cylinder head gasket
10	Cylinder block

Camshaft Sprocket Lock Bolt, Variable Valve Timing Actuator Lock Bolt (L3 (with variable valve timing mechanism)) Disassembly Note

1. Hold the camshaft by using a wrench on the cast hexagon as shown, and loosen the camshaft sprocket lock bolt or variable valve timing actuator lock bolt (L3 (with variable valve timing mechanism)).

L8, LF, L3

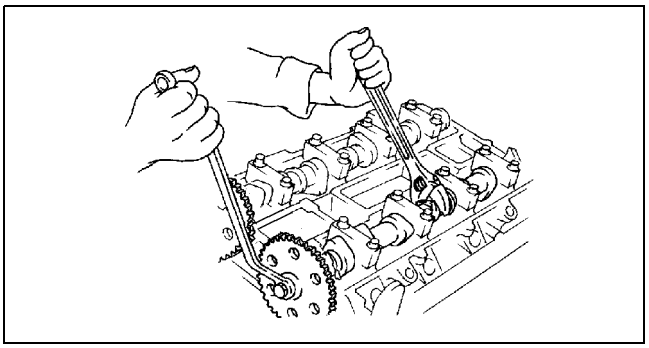

AME2224E077

L3 (with variable valve timing mechanism)

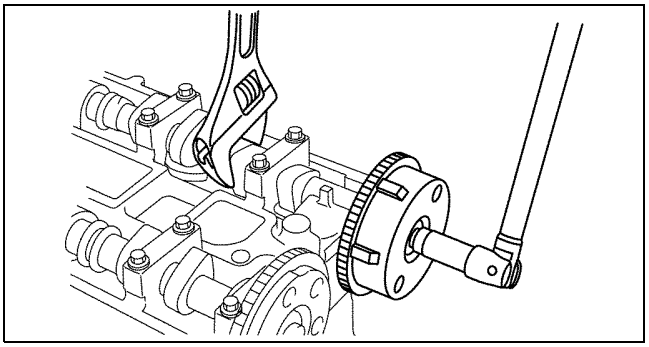

AME2224E078

Camshaft Cap Disassembly Note

1. Before removing the camshaft caps, inspect the following.
   — Camshaft end play and camshaft journal oil clearance (See B–16 CAMSHAFT INSPECTION.)

   Note
   - The camshaft caps are numbered to make sure they are assembled in their original positions. When removed, keep the caps with the cylinder head they were removed from. Do not mix the caps.

2. Loosen the camshaft caps bolts in two or three steps in the order shown.

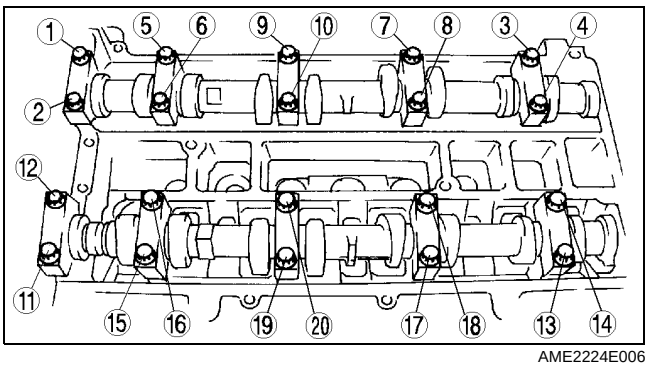

AME2224E006

Tappet Disassembly Note

Note

- The tappets are numbered to make sure they are assembled in their original positions. When removed, keep the tappets with the cylinder head they were removed from. Do not mix the tappets.

Cylinder Head Bolt Disassembly Note

1. Loosen the cylinder head bolts in two or three steps in the order shown.

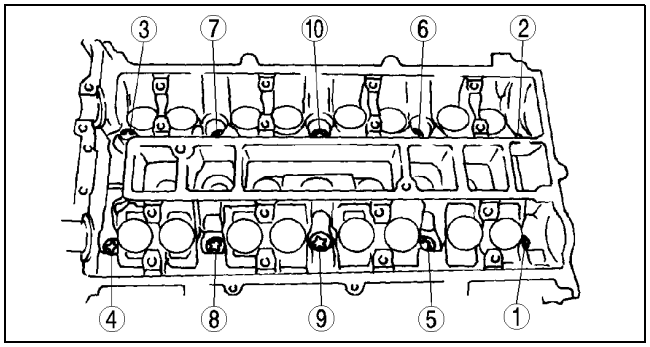

AME2224E005

CYLINDER HEAD (II) DISASSEMBLY

A6E242402000E06

1. Disassemble in the order indicated in the table.

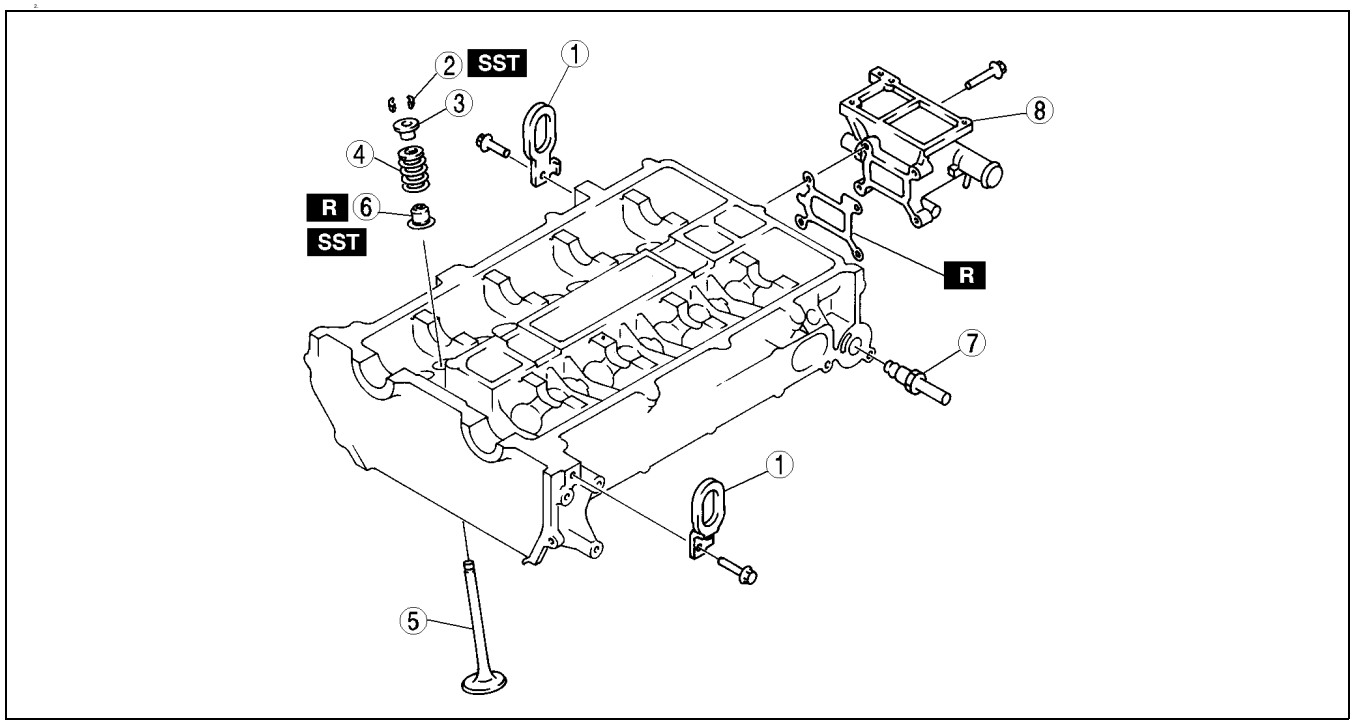

AME2224E008

1	Engine hanger
2	Valve keeper (See B–8 Valve Keeper Disassembly Note)
3	Upper valve spring seat
4	Valve spring

5	Valve
6	Valve seal (See B–8 Valve Seal Disassembly Note)
7	EGR pipe
8	Water outlet case

Valve Keeper Disassembly Note

1. Remove the valve keeper using the **SSTs**.

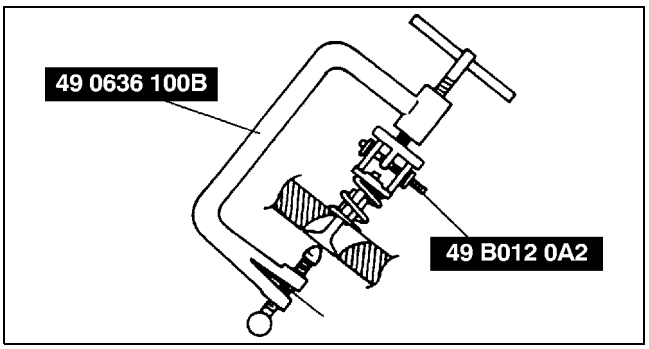

AME2224E302

Valve Seal Disassembly Note

1. Remove the valve seal using the **SST**.

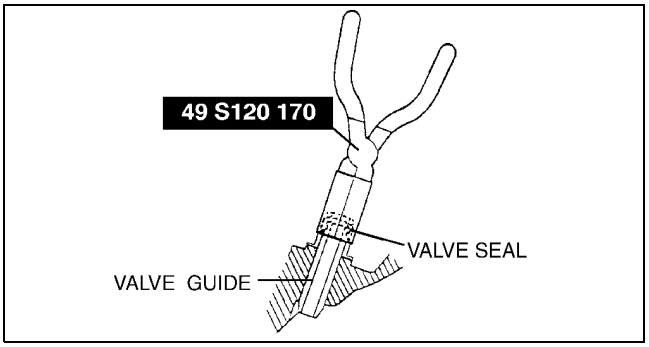

AME2224E303

CYLINDER BLOCK (I) DISASSEMBLY

A6E242402000E07

1. Disassemble in the order indicated in the table.

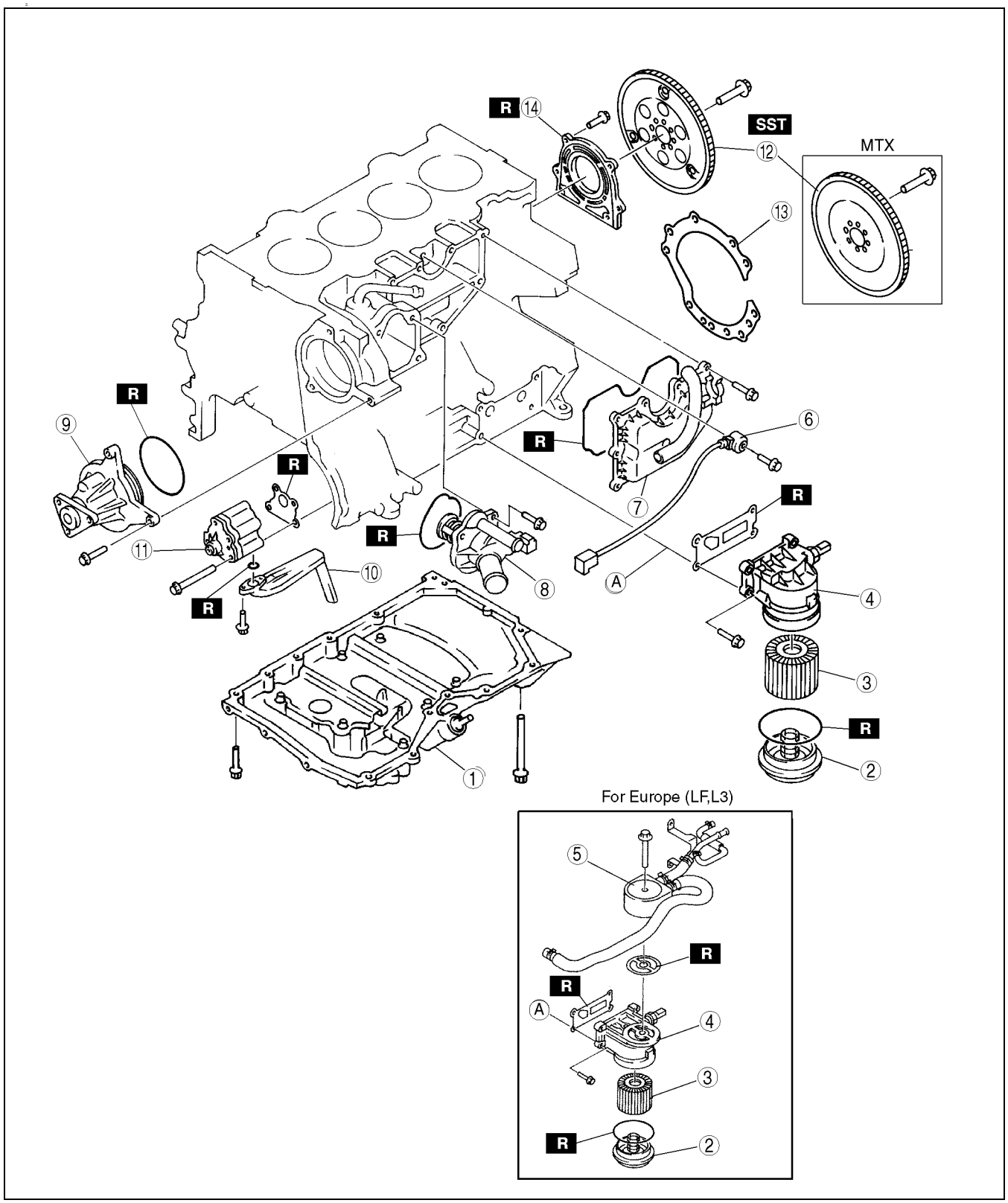

AME2224E011

1	Oil pan
2	Oil filter cover
3	Oil filter
4	Oil filter adapter
5	Oil cooler

6	Knock sensor
7	Oil separator
8	Thermostat
9	Water pump
10	Oil strainer

11	Oil pump
12	Flywheel (MTX), Drive plate (ATX) (See B–10 Drive Plate (ATX), Flywheel (MTX) Disassembly Note)
13	End plate (MTX)
14	Rear oil seal

Drive Plate (ATX), Flywheel (MTX) Disassembly Note

1. Hold the crankshaft using the SST.
2. Remove the bolts in several passes.

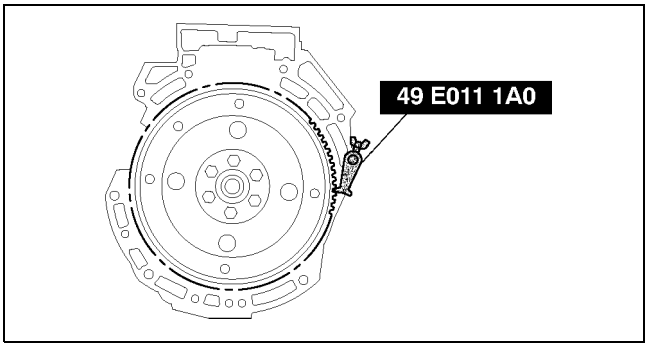

AME2224E106

CYLINDER BLOCK (II) DISASSEMBLY

A6E242402000E08

1. Disassemble in the order indicated in the table.

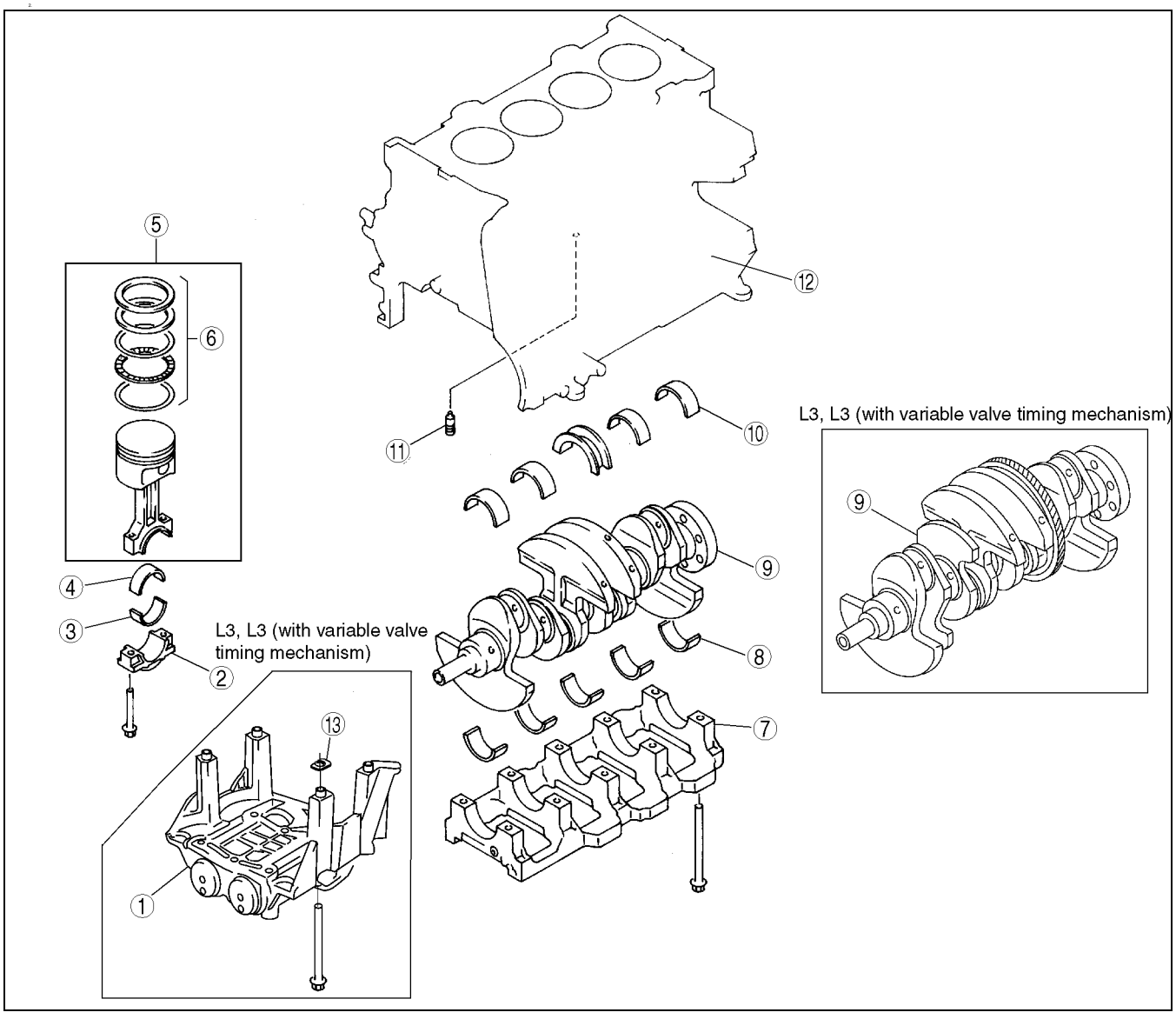

AME2224E012

1	Balancer unit (L3, L3 (with variable valve timing mechanism))
2	Connecting rod cap (See B–11 Connecting Rod Cap Disassembly Note)
3	Lower connecting rod bearing
4	Upper connecting rod bearing
5	Connecting rod, Piston assembly
6	Piston ring

7	Main bearing cap (See B–11 Main Bearing Cap Disassembly Note)
8	Lower main bearing, thrust bearing
9	Crankshaft
10	Upper main bearing, thrust bearing
11	Oil jet valve
12	Cylinder block
13	Adjustment shim

Connecting Rod Cap Disassembly Note

1. Inspect the connecting rod side clearance. (See B–22 CONNECTING ROD INSPECTION .)
2. Remove the connecting rod bolt from the connecting rod cap by tapping the bolt with a plastic hammer.

Note

- The tappets are numbered to make sure they are assembled in their original positions. When removed, keep the tappets with the cylinder head they were removed from. Do not mix the tappets.

Main Bearing Cap Disassembly Note

1. Inspect the crankshaft end play. (See B–20 CRANKSHAFT INSPECTION .)
2. Loosen the main bearing cap bolts in two or three steps in the order shown.

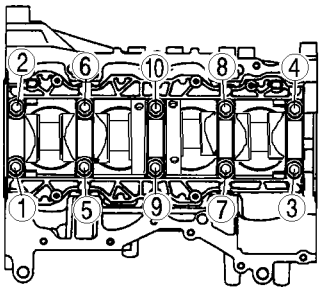

AME2224E341

CYLINDER HEAD INSPECTION

A6E242410100E01

1. Carry out color contrast penetrate examination on the cylinder head surface.
   - Replace the cylinder head if necessary.
2. Inspect for the following and repair or replace if necessary.
   (1) Sunken valve seats
   (2) Excessive camshaft oil clearance and end play
3. Measure the cylinder head for distortion in the six directions as shown.
   - If the distortion exceeds the maximum, replace the cylinder head.

   Maximum distortion:
   0.10 mm {0.004 in}

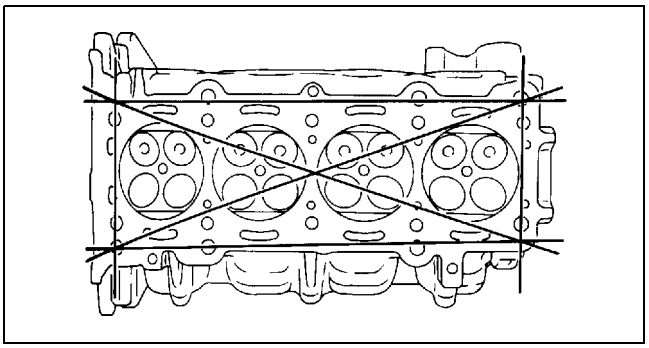

AME2224E317

4. Measure the manifold contact surface distortion as shown.
   - If the distortion exceeds the maximum, grind the surface or replace the cylinder head.

   Maximum distortion:
   0.10 mm {0.004 in}

   Maximum grinding:
   0.15 mm {0.006 in}

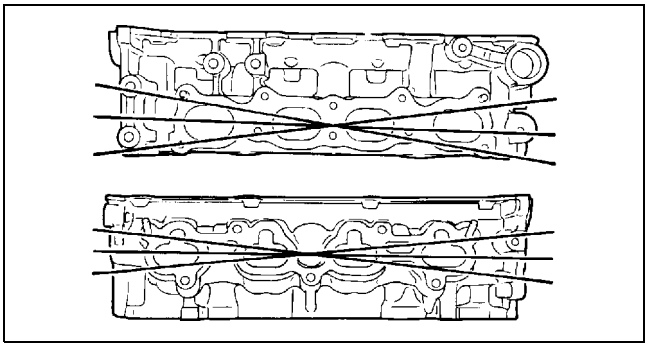

AME2224E318

VALVE, VALVE GUIDE INSPECTION

A6E242412111E01

1. Measure the valve head margin thickness of each valve.
   - If not specified, replace the valve.

   Margin thickness:
   IN: 1.62 mm {0.0637 in}
   EX: 1.82 mm {0.0716 in}

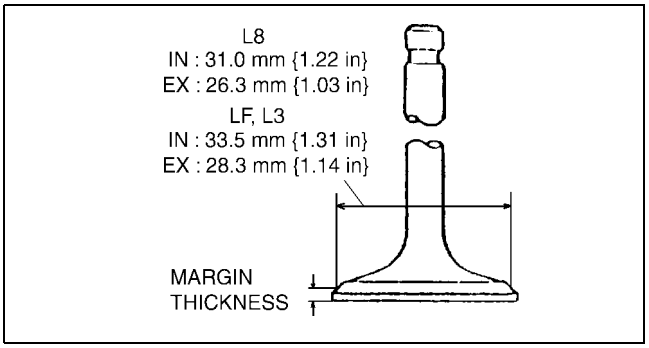

AME2224E070

2. Measure the length of each valve. Replace the valve if necessary.
   - If not specified, replace the valve.

   Standard length L:
   IN: 102.99—103.79 mm {4.055—4.086 in}
   EX: 104.25—105.05 mm {4.105—4.135 in}

   Minimum length L:
   IN: 102.99 mm {4.055 in}
   EX: 103.79 mm {4.086 in}

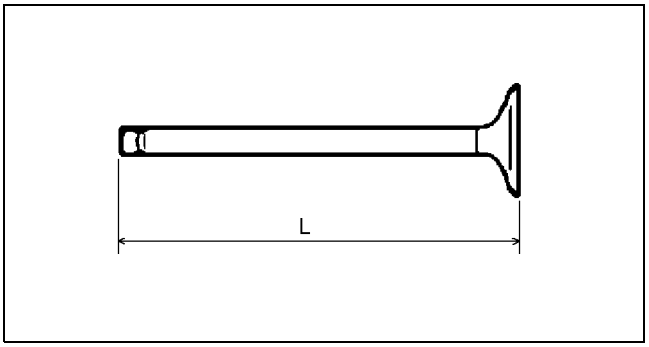

AME2224E071

3. Measure the stem diameter of each valve in X and Y directions at the three points (A, B, and C) as indicated in the figure.
   - If not as specified, replace the valve.

   Standard diameter:
   IN: 5.470—5.485 mm {0.2154—0.2159 in}
   EX: 5.465—5.480 mm {0.2152—0.2157 in}

   Maximum diameter:
   IN: 5.440 mm {0.2142 in}
   EX: 5.435 mm {0.2140 in}

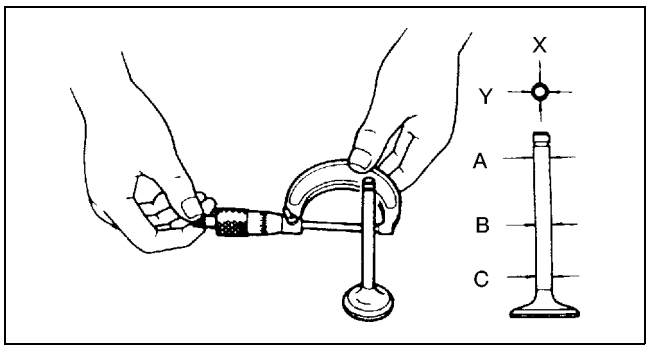

AME2224E313

4. Measure the inner diameter of each valve guide in X and Y directions at the three points (A, B, and C) as indicated in the figure.
   - If not as specified, replace the valve guide.

   Standard Inner diameter:
   IN: 5.509—5.539 mm {0.2169—0.2180 in}
   EX: 5.509—5.539 mm {0.2169—0.2180 in}

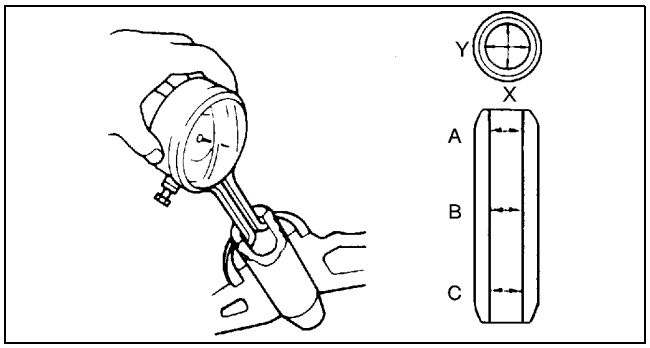

AME2224E314

5. Calculate the valve stem to guide clearance by subtracting the outer diameter of the valve stem from the inner diameter of the corresponding valve guide.
   - If not as specified, replace the valve and/or the valve guide.

   Standard clearance:
   IN: 0.024—0.069 mm {0.0009—0.0027 in}
   EX: 0.029—0.074 mm {0.0012—0.0029 in}

   Maximum clearance:
   0.10 mm {0.004 in}

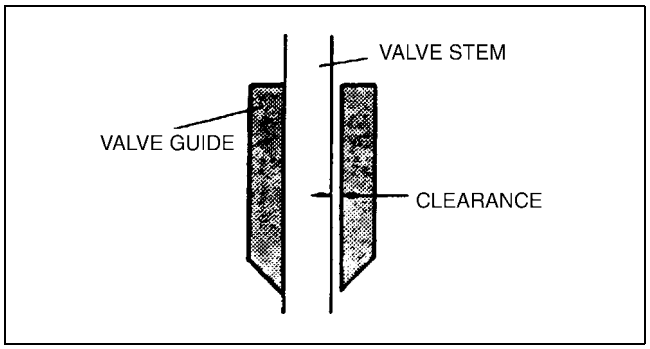

AME2224E315

6. Measure the protrusion height (dimension A) of each valve guide without lower valve spring seat.
   - If not as specified, replace the valve guide.

   Standard diameter:
   IN: 12.2—12.8 mm {0.481—0.503 in}
   EX: 12.2—12.8 mm {0.481—0.503 in}

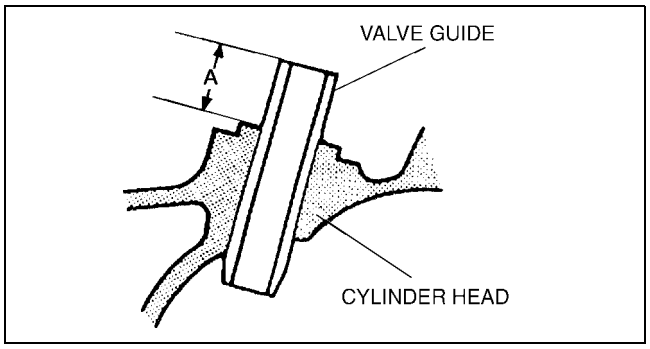

AME2224E073

VALVE GUIDE REPLACEMENT

A6E242412111E04

Valve Guide Removal

1. Remove the valve guide from the combustion chamber side using the **SST**.

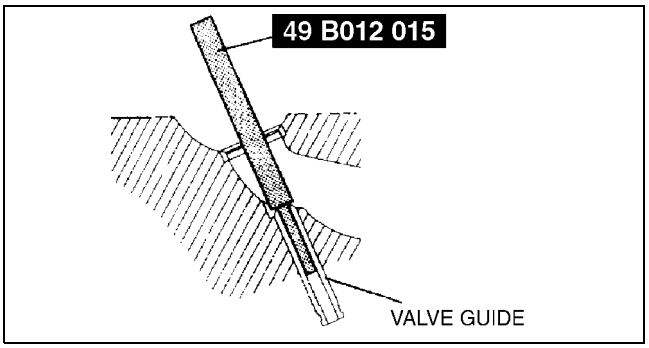

AME2224E312

Valve Guide Installation

1. Assemble the SSTs so that depth L is as specified.

   Depth L:
   IN: 12.2—12.8 mm {0.481—0.501 in}
   EX: 12.2—12.8 mm {0.481—0.501 in}

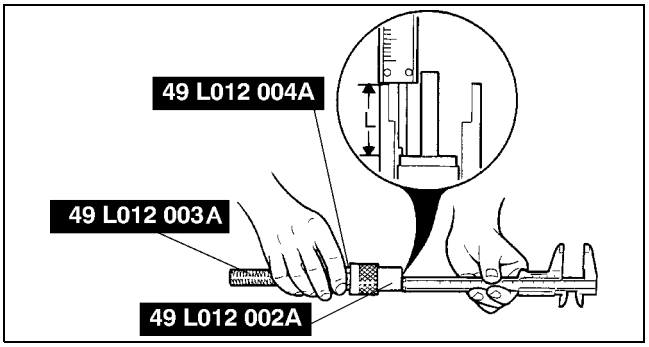

AME2224E107

2. Tap the valve guide in from the side opposite the camshaft side until the **SSTs** contacts the cylinder head.

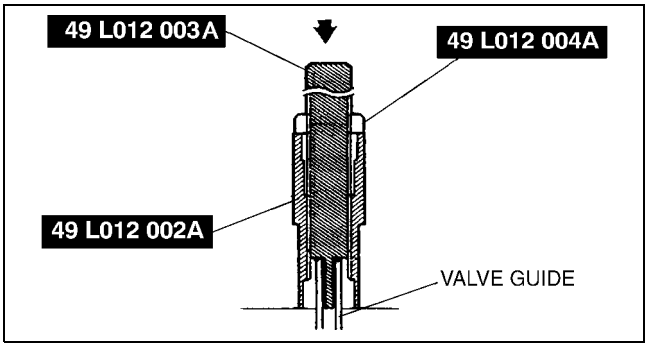

AME2224E018

3. Verify that the valve guide projection height (dimension A) is within the specification.

   Standard height:
   IN: 12.2—12.8 mm {0.481—0.501 in}
   EX: 12.2—12.8 mm {0.481—0.501 in}

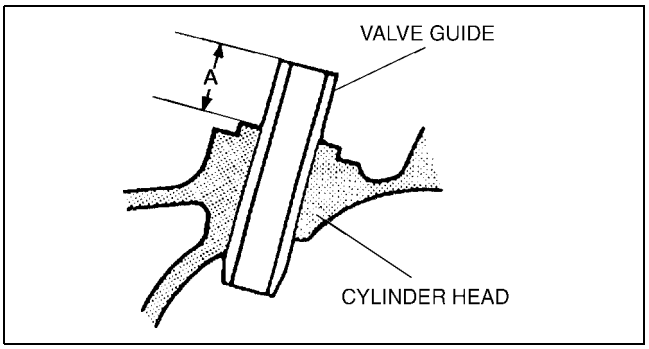

AME2224E073

VALVE SEAT INSPECTION/REPAIR

A6E242410102E01

1. Measure the seat contact width.
   - If necessary, resurface the valve seat using a 45° valve seat cutter and/or resurface the valve face.

   Standard width:
   1.2—1.6 mm {0.048—0.062 in}

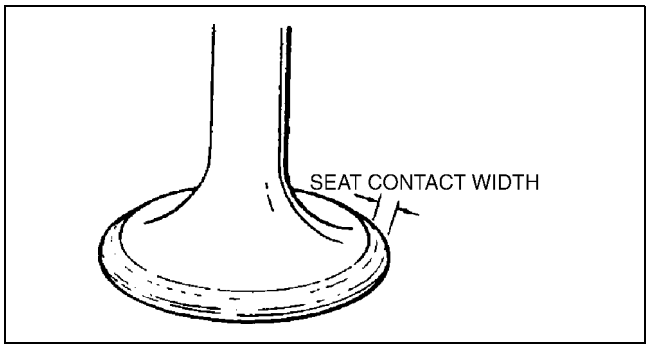

AME2224E316

2. Verify that the valve seating position is at the center of the valve face.

   (1) If the seating position is too out side, correct the valve seat using a **70°** (IN) or **65°** (EX) cutter, and a **45°** cutter.
   (2) If the seating position is too inner side, correct the valve seat using a **30°** (IN) cutter, and a **0°** (EX) cutter, and a **45°** cutter.

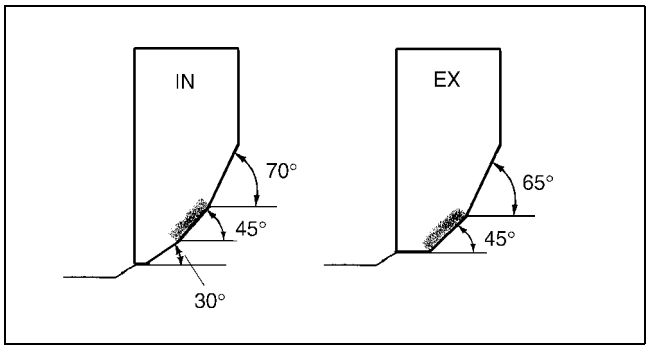

AME2224E020

3. Inspect the sinking of the valve seat. Measure the protruding length (dimension L) of the valve stem.
   - If not specified, replace the cylinder head.

   Standard dimension L:
   IN: 40.64—42.24 mm {1.600—1.662 in}

   EX: 40.50—42.10 mm {1.595—1.657 in}

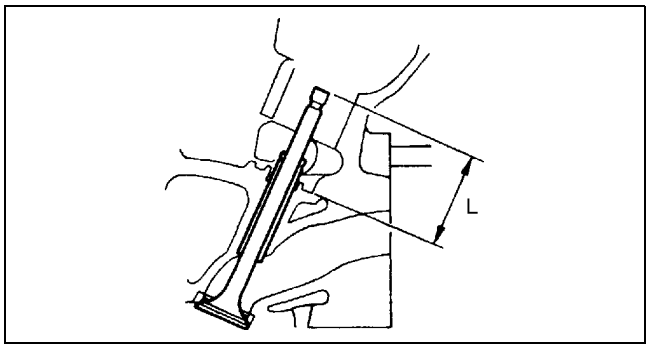

AME2224E079

VALVE SPRING INSPECTION

A6E242412125E01

1. Apply pressing force to the pressure spring and inspect the spring height.
   - If not as specified, replace the valve spring.

   Pressing force:
   494.9 N {50.47 kgf, 111.2 lbf}
   Standard height:
   27.80 mm {1.094 in}

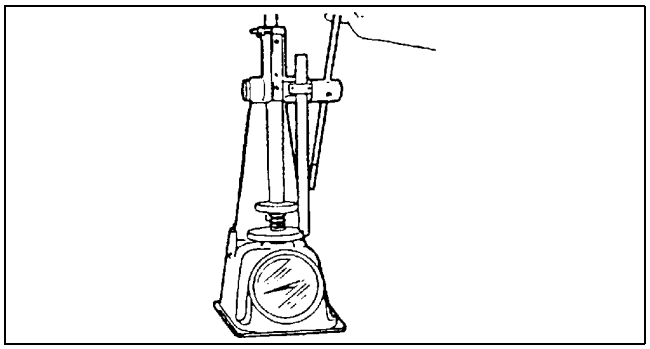

AME2224E308

2. Measure the out-of-square of the valve spring, using a square, as shown.
   (1) Rotate the valve spring one full turn and measure "A" at the point where the gap is the largest.
      - If not as specified, replace the valve spring.

Valve spring maximum out-of-square:
1% (2.10 mm {0.0826 in})

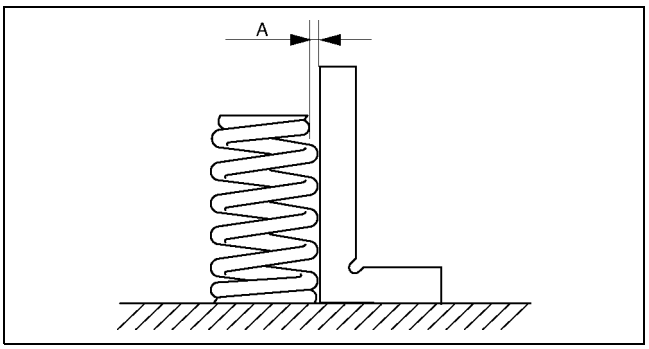

AME2224E309

CAMSHAFT INSPECTION

A6E242412420E01

1. Set the No.1 and No.5 journals on V-blocks.
2. Measure the camshaft runout.
   - If not as specified, replace the camshaft.

Maximum runout:
0.03 mm {0.0012 in}

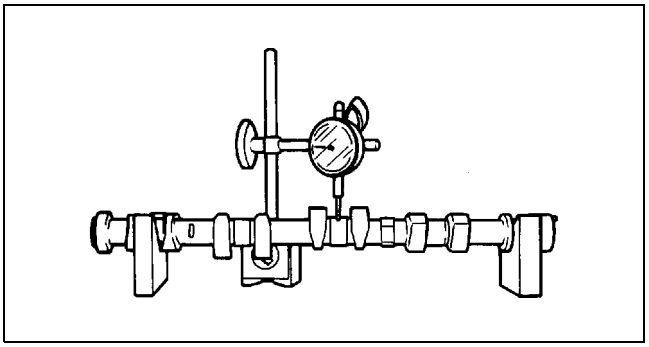
AME2224E082

3. Measure the cam lobe height at the two points as shown.
   - If not as specified, replace the camshaft.

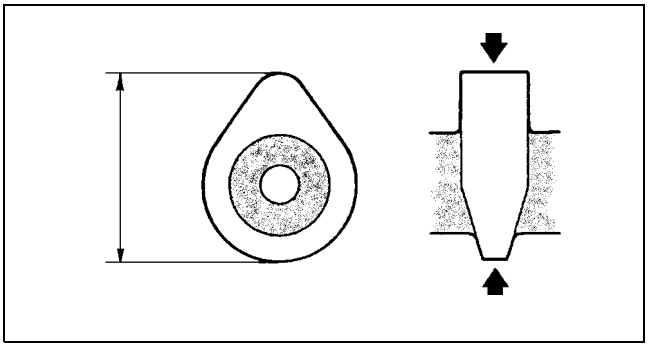
AME2224E343

Standard height (mm) {in}

Camshaft	L8	LF, L3	L3 (with variable valve timing mechanism)
INT	40.79 {1.606}	42.12 {1.659}	42.44 {1.671}
EXH	41.08 {1.618}	41.08 {1.618}	41.18 {1.622}

Minimum height (mm) {in}

Camshaft	L8	LF, L3	L3 (with variable valve timing mechanism)
INT	40.692 {1.603}	42.022 {1.655}	42.342 {1.667}
EXH	40.982 {1.614}	40.982 {1.614}	41.082 {1.618}

4. Measure the journal diameters in X and Y directions at the two points (A and B) as indicated in the figure.
   - If not as specified, replace the camshaft.

   Standard diameter:
   24.96—24.98 mm {0.9827—0.9834 in}

   Minimum diameter:
   24.95 mm {0.982 in}

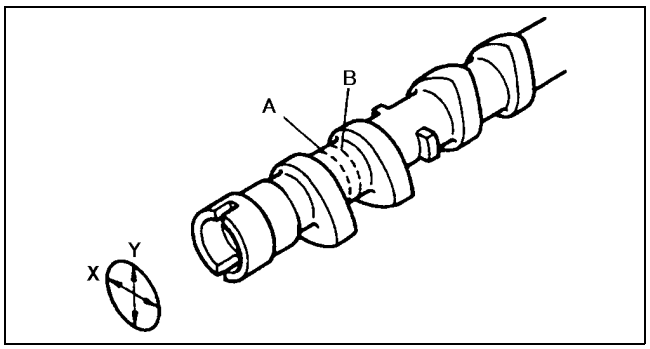

AME2224E344

5. Remove the tappet.
6. Position plasticgage atop the journals in the axial direction.
7. IInstall the camshaft cap. (See B–40 Camshaft Assembly Note.)
8. Remove the camshaft cap. (See B–6 Camshaft Cap Disassembly Note.)
9. Measure the oil clearance.
   - If not as specified, replace the cylinder head.

   Standard clearance:
   0.04—0.08 mm {0.002—0.003 in}

   Maximum clearance:
   0.09 mm {0.0035 in}

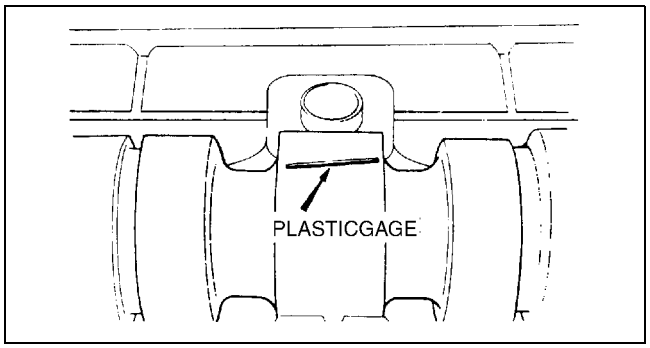

AME2224E307

10. Install the camshaft cap. (See B–40 Camshaft Assembly Note)

11. Measure the camshaft end play.
    - If not as specified, replace the cylinder head or camshaft.

    Standard end play:
    0.09—0.24 mm {0.0035—0.0094 in}

    Maximum end play:
    0.25 mm {0.0099 in}

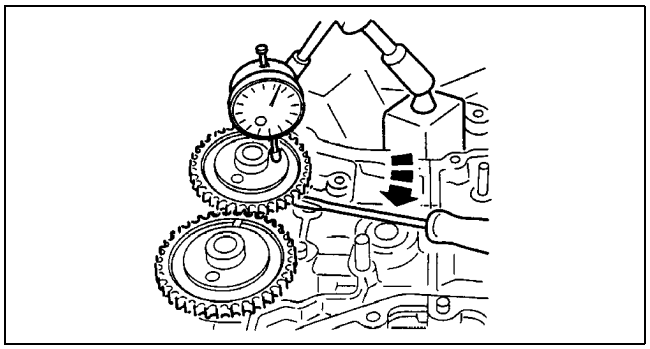
AME2224E025

12. Remove the camshaft cap. (See B–6 Camshaft Cap Disassembly Note.)

TAPPET INSPECTION

1. Measure the tappet hole inner diameter in X and Y directions at the two points (A and B) shown.

   Inner diameter:
   31.000—31.030 mm {1.2205—1.2216 in}

A6E242412310E01

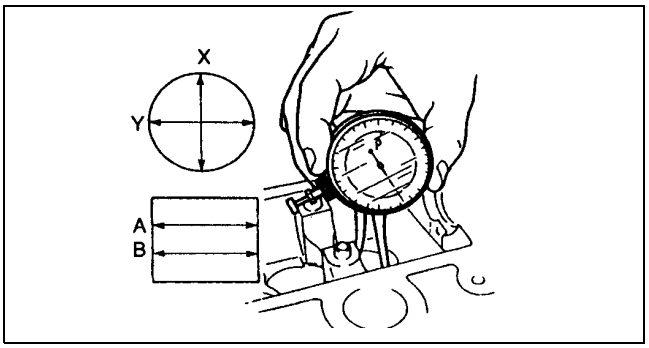

AME2224E319

2. Measure the tappet body outer diameter in X and Y directions at the two points (A and B) shown.

   Outer diameter:
   30.970—30.980 mm {1.2193—1.2196 in}

3. Subtract the tappet body outer diameter from the tappet hole inner diameter.
   - If not as specified, replace the tappet or cylinder head.

   Clearance
   Standard:
   0.02—0.06 mm {0.0008—0.0023 in}

   Maximum:
   0.15 mm {0.006 in}

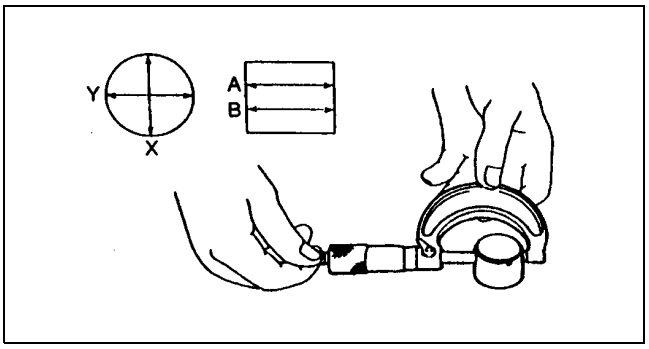

AME2224E320

CYLINDER BLOCK INSPECTION

1. Measure the distortion of the cylinder block top surface in the six directions as indicated in the figure.
   - If the distortion exceeds the maximum, replace the cylinder block.

   Maximum cylinder block distortion:
   0.10 mm {0.004 in}

A6E242410300E01

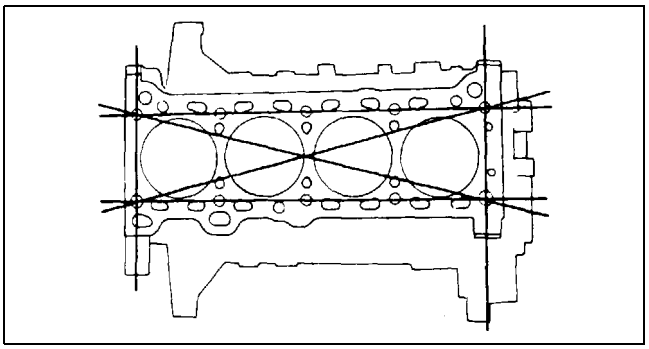

AME2224E089

2. Measure the cylinder bores in X and Y directions at 42 mm {1.65 in} below the top surface.
   - If the cylinder bore exceeds the wear limit, replace the cylinder block.

   Standard diameter limit
   L8:
   83.000—83.030 mm {3.2677—3.2689 in}
   LF, L3, L3 (with variable valve timing mechanism):
   87.500—87.530 mm {3.4449—3.4460 in}
   Minimum / maximum bore diameter limit
   L8:
   82.940—83.090 mm {3.2653—3.2712 in}
   LF, L3, L3 (with variable valve timing mechanism):
   87.440—87.590 mm {3.4425—3.4484 in}

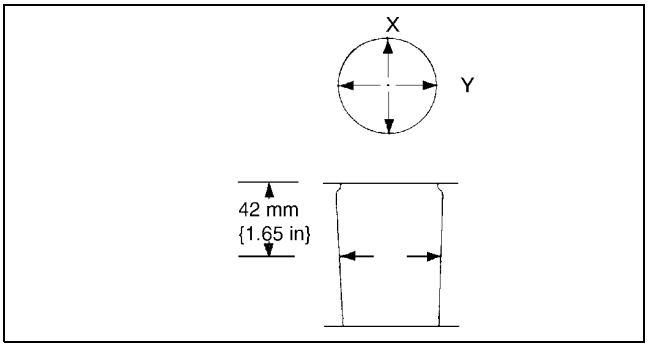

AME2224E090

OIL JET VALVE INSPECTION

A6E242410730E02

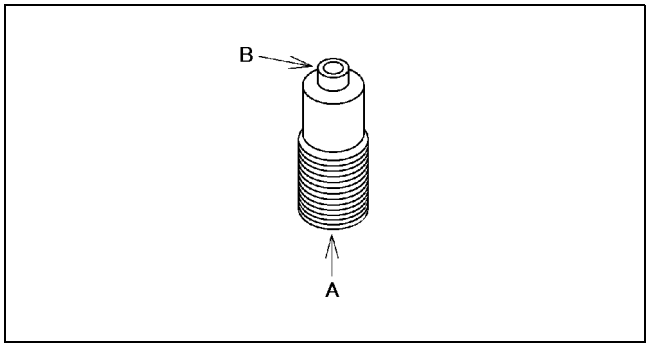

AME2224E105

1. Apply compressed air to oil jet valve A and verify that air passes through oil jet valve B.
   - If not ventilation,replace the oil jet valve.

   Air pressure:
   216—274 kPa {2.2—2.7kgf•cm^2 31.4—39.7 psi}

PISTON INSPECTION

A6E242411010E01

Caution
- **The piston, piston ring and connecting rod cannot be disassembled.**
- **When replacing the piston, piston pin, piston ring and connecting rod, replace them together as a single unit.**

1. Measure the outer diameter of each piston at right angle 90° to the piston pin, 10.0 mm {0.40 in} above the under of the piston.
   - If the piston diameter is below the standard diameter, replace the piston, piston pin, piston ring and connecting rod as a single unit.

   Piston diameter
   L8:
   82.965—82.995 mm {3.2664—3.2675 in}
   LF, L3, L3 (with variable valve timing mechanism):
   87.465—87.495 mm {3.4435—3.4446 in}

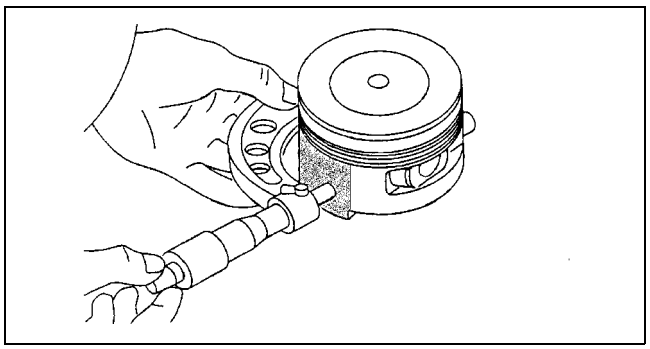

AME2224E030

2. Measure the piston-to-cylinder clearance.
   - If not as specified, replace the piston, piston pin, piston ring and connecting rod as a single unit.

   Standard clearance:
   0.025—0.045 mm {0.0010—0.0017 in}

   Maximum clearance:
   0.11 mm {0.0043 in}

3. Measure the piston ring-to-ring groove clearance around the entire circumference.
   - If the piston ring-to-ring groove clearance exceeds the maximum clearance, replace the piston, piston pin, piston ring and connecting rod as a single unit.

   Standard clearance:
   Top: 0.03—0.08 mm {0.0012—0.0031 in}
   Second: 0.03—0.07 mm {0.0012—0.0027in}
   Oil: 0.03—0.07 mm {0.0012—0.0027 in}

   Maximum clearance:
   Top: 0.17 mm {0.0067 in}
   Second, Oil: 0.15 mm {0.0059 in}

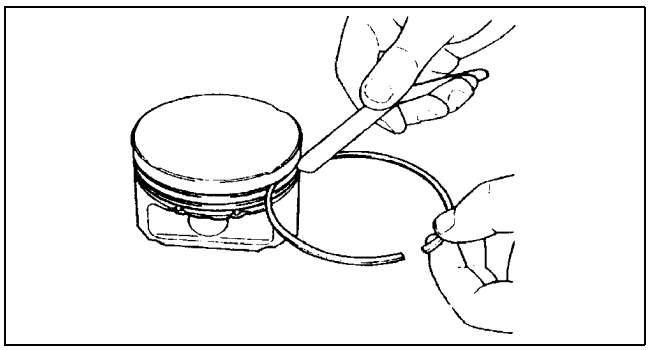

AME2224E029

4. Insert the piston ring into the cylinder by hand and use the piston to push it to the bottom of the ring travel.
5. Measure each piston ring end gap with a feeler gauge.
   - If the piston ring end gap exceeds the maximum end gap, replace the piston, piston pin, piston ring and connecting rod as a single unit.

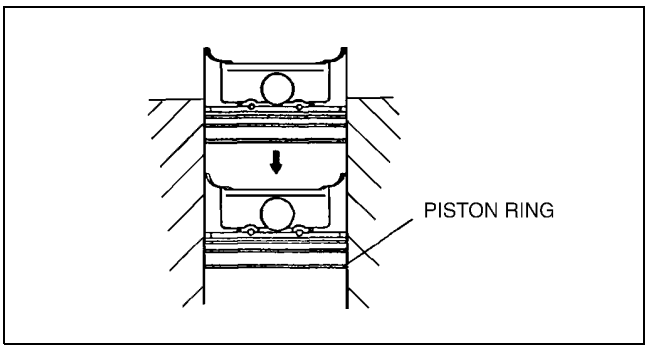

AME2224E104

Standard end gap:
Top: 0.16—0.31 mm {0.0063—0.012 in}
Second: 0.33—0.48 mm {0.0130—0.0189 in}
Oil (rail): 0.20—0.70 mm {0.0079—0.0275 in}

Maximum end gap:
1.0 mm {0.0393 in}

CRANKSHAFT INSPECTION

A6E242411301E01

1. Install the main bearing cap. (See B–30 Main Bearing Caps Assembly Note.)
2. Measure the crankshaft end play.
   - If not as specified, replace the thrust bearing or crankshaft so that the specified end play is obtained.

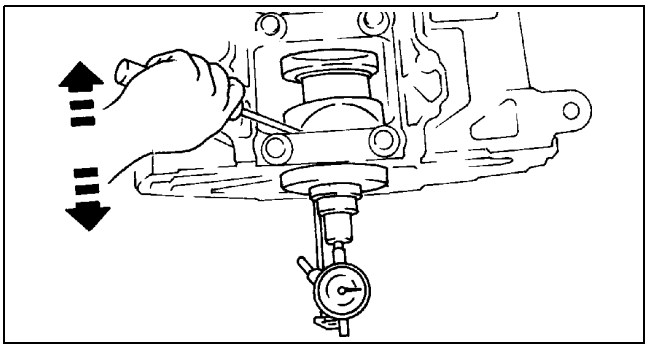
AME2224E034

Standard end play:
0.22—0.45 mm {0.0087—0.0177 in}

Maximum end play:
0.55 mm {0.022 in}

3. Remove the main bearing cap. (See B–11 Main Bearing Cap Disassembly Note.)
4. Measure the crankshaft runout.
   - If the crankshaft runout exceeds the maximum runout, replace the crankshaft.

Maximum runout:
0.05 mm {0.0019 in}

L8, LF

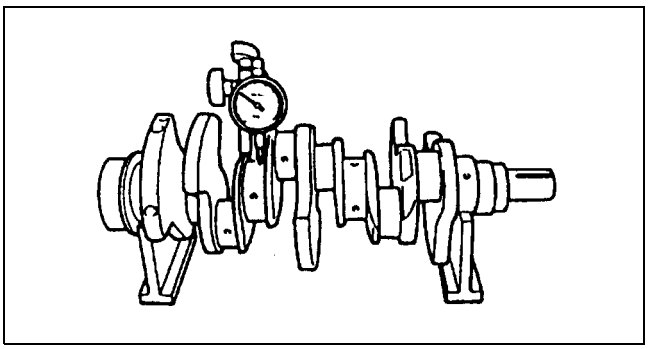
AME2224E035

L3, L3 (with variable valve timing mechanism)

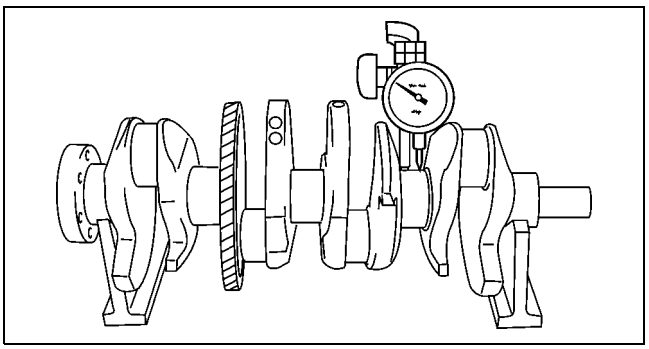
AME2224E311

5. Measure the journal diameter in X and Y directions at the two points (A and B) as indicated in the figure.
   - If not as specified, replace the crankshaft or grind the journal and install the undersize bearing.

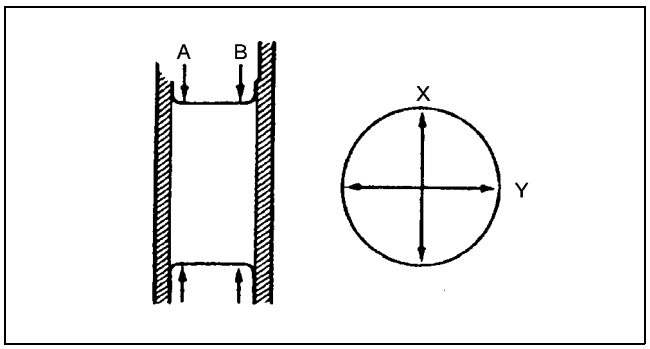

AME2224E036

Main journal

mm {in}

Bearing size	Standard diameter
Standard	51.980—52.000 {2.0464—2.0472}
0.25 {0.01} undersize	51.730—51.750 {2.0366—2.0373}

Maximum out-of-round:
0.05 mm {0.0019 in}

Crank pin

mm {in}

Bearing size	Standard diameter
Standard	49.980—50.000 {1.9677—1.9685}
0.25 {0.01} undersize	49.730—49.750 {1.9579—1.9586}

Maximum out-of-round:
0.05 mm {0.0019 in}

6. Install the main bearing caps and crankshaft.
7. Position a plastigage atop the journals in the axial direction.
8. Install the main bearing caps and cylinder block. (See B–30 Main Bearing Caps Assembly Note.)
9. Remove the main bearing caps. (See B–11 Main Bearing Cap Disassembly Note.)
10. Measure the main journal oil clearance.
    - If the clearance exceeds the maximum, replace the main bearing using the main bearing selection table or grind the main journal and install the oversize bearings so that the specified oil clearance is obtained.

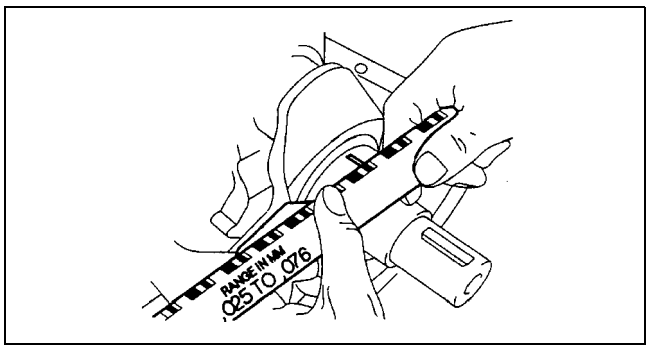

AME2224E038

Standard clearance:
0.019—0.035 mm {0.0007—0.0013 in}

Maximum clearance:
0.10 mm {0.0039 in}

mm {in}

Bearing size	Color	Bearing thickness
Standard	Green	2.506—2.509 {0.0987—0.0988}
0.25 {0.01} oversize		2.628—2.634 {0.1034—0.1037}
0.50 {0.02} oversize		2.753—2.759 {0.1084—0.1086}

CONNECTING ROD INSPECTION

A6E242411211E01

Caution
- **The piston, piston ring and connecting rod cannot be disassembled.**
- **When replacing the piston, piston pin, piston ring and connecting rod, replace them together as a single unit.**

1. Install the connecting rod cap. (See B–31 Connecting Rod Cap Assembly Note.)
2. Measure the connecting rod large end side clearance.
   - If the connecting rod large end side clearance exceeds the maximum clearance, replace the piston, piston pin, piston ring and connecting rod as a single unit.

   Standard clearance:
   0.14—0.36 mm {0.0056—0.0141 in}

   Maximum clearance:
   0.435 mm {0.0172 in}

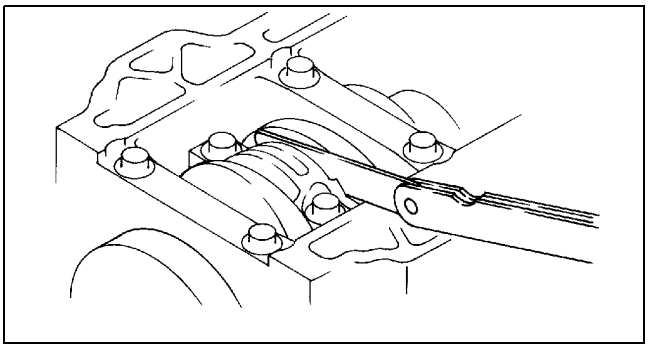

AME2224E059

3. Remove the connecting rod cap.
4. Position plastigage atop the journals in the axial direction.
5. Install the connecting rod bearing and connecting rod cap. (See B–31 Connecting Rod Cap Assembly Note.)
6. Remove the connecting rod cap.
7. Measure the connecting rod oil clearance.
   - If not as specified, replace the connecting rod bearing or grind the crank pin and use oversize bearings so that the specified clearance is obtained.

   Standard clearance:
   0.026—0.052 mm {0.0011—0.0020 in}

   Maximum clearance:
   0.1 mm {0.0039 in}

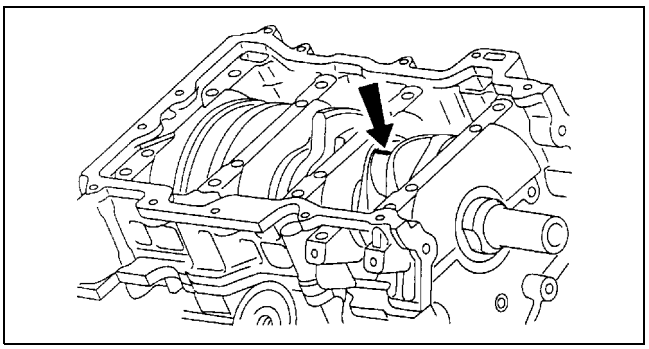

AME2224E310

mm {in}

Bearing size	Color	Bearing thickness
Standard	Green	1.496—1.502 {0.0589—0.0591}
0.50 {0.02} oversize	1.748—1.754 {0.0688—0.0690}	
0.25 {0.01} oversize	1.623—1.629 {0.0639—0.0641}	

BOLT INSPECTION

A6E242410135E01

1. Measure the length of each bolt.
   - Replace any that exceeds maximum length.

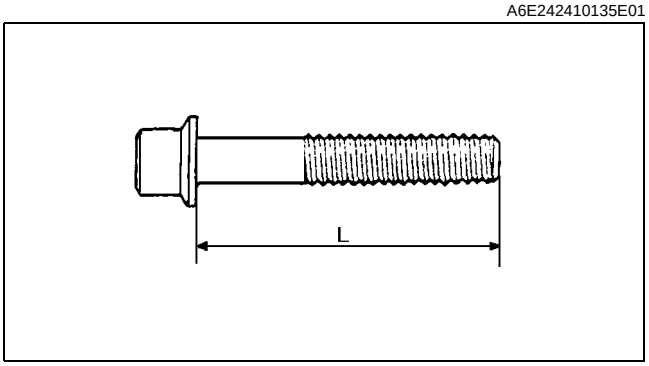

AME2224E050

Length L

bolt	Standard (mm) {in}	Maximum (mm) {in}
Cylinder head bolt	149.0—150 {5.86—5.90}	150.5 {5.92}
Connecting rod bolt	44.7—45.3 {1.75—1.78}	46.0 {1.81}
Main bearing cap bolt	110.0—110.6 {4.33—4.35}	111.3 {4.38}

VARIABLE VALVE TIMING ACTUATOR INSPECTION

A6E242400142E02

L3 (with variable valve timing mechanism)

Caution
- **Variable valve timing actuator can not be disassembled it is a precision unit /**

1. Confirm that notch of the rotor and bump of the cover at the variable valve timing actuator are aligned and fitted.
   - If the notch and the bump are not aligned, rotate the rotor toward the bulb timing retard position by hand until they are in place.
   - If the rotor and cover are not secured even though their notch and groove are aligned, replace the variable valve timing actuator.

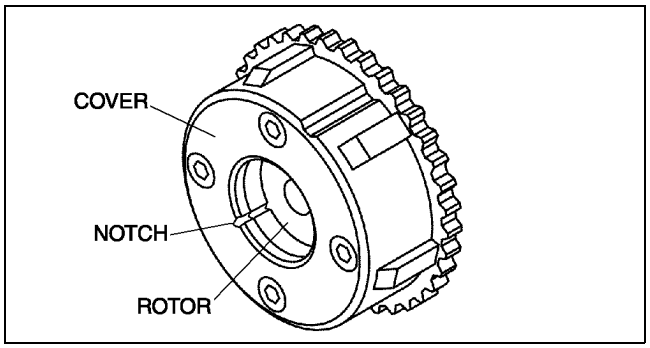

AME2224E342

OIL CONTROL VALVE (OCV) INSPECTION

A6E242414420E02

L3 (with variable valve timing mechanism)
Coil resistance inspection

1. Disconnect the negative battery cable.
2. Disconnect the oil control valve (OCV) connector.
3. Measure the resistance between terminals A and B using an ohmmeter.
   - If not as specified, replace the oil control valve (OCV).

Specification
6.9—7.9 ohms

4. Connect the oil control valve (OCV) connector.

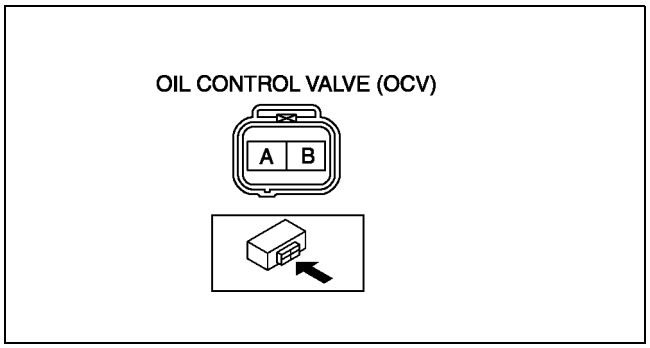

A6E2226W002

Spool valve operation inspection

1. Disconnect the negative battery cable.
2. Remove the oil control valve (OCV).
3. Verify that the spool valve in the oil control valve (OCV) is in the maximum valve timing retard position as indicated in the figure.
   - If not as specified, replace the oil control valve (OCV).
4. Verify that the battery is fully charged.
   - If not as specified, recharge the battery.

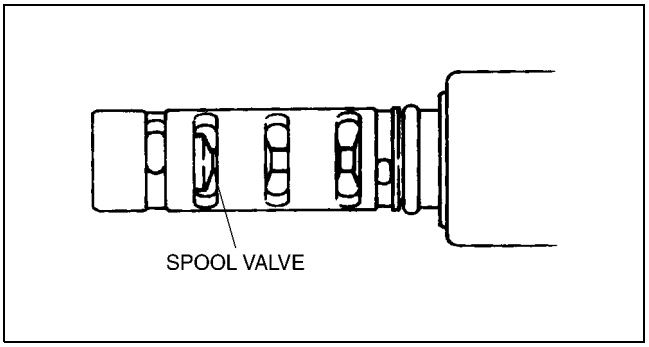

AME2226W003

5. Apply battery positive voltage between the oil control valve (OCV) terminals and verify that the spool valve operates and moves to the maximum valve timing advance position.
   - If not as specified, replace the oil control valve (OCV).

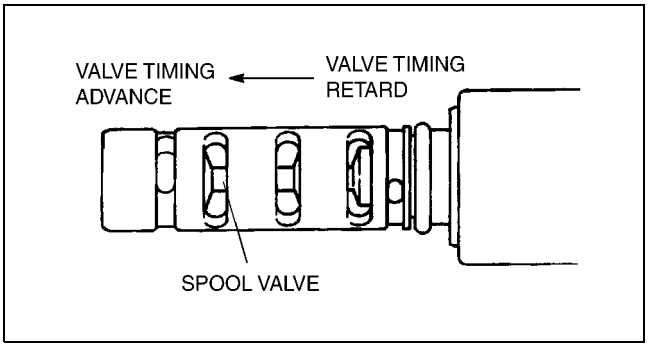

AME2226W004

Note
- When applying battery positive voltage between the oil control valve (OCV) terminals, the connection can be either of the following:
  — Positive battery cable to terminal A, negative battery cable to terminal B
  — Positive battery cable to terminal B, negative battery cable to terminal A

6. Stop applying battery positive voltage and verify that the spool valve returns to the maximum valve timing retard position.
   - If not as specified, replace the oil control valve (OCV).

VALVE CLEARANCE INSPECTION

A6E242412111E02

1. Measure the valve clearance as follows.
   (1) Turn the crankshaft clockwise so that the No.1 piston is at TDC of the compression stroke.
   (2) Measure the valve clearance at A in the figure.
      - If the valve clearance exceeds the space the tappet. (See B–25 VALVE CLEARANCE ADJUSTMENT.)

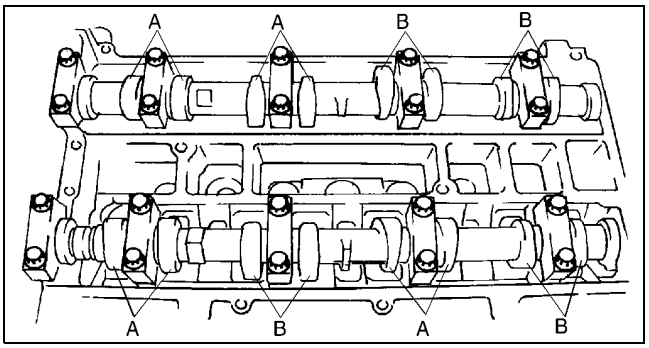

AME2212W001

Note
- Make sure to note the measured values for choosing the suitable replacement tappets.

Standard [Engine cold]
IN: 0.22—0.28 mm {0.0087—0.0110 in} (0.25±0.03 mm {0.0098±0.0011 in})
EX: 0.27—0.33 mm {0.0106—0.0130 in} (0.30±0.03 mm {0.0118±0.0011 in})

(3) Turn the crankshaft **360°** clockwise so that the No.4 piston is at TDC of the compression stroke.
(4) Measure the valve clearance at B in the figure.
   - If the valve clearance exceeds the standard, replace the tappet. (See B–25 VALVE CLEARANCE ADJUSTMENT.)

Note
- Make sure to note the measured values for choosing the suitable replacement tappets.

Standard [Engine cold]
IN: 0.22—0.28 mm {0.0087—0.0110 in} (0.25±0.03 mm {0.0098±0.0011 in})
EX: 0.27—0.33 mm {0.0106—0.0130 in} (0.30±0.03 mm {0.0118±0.0011 in})

VALVE CLEARANCE ADJUSTMENT

A6E242412111E03

1. Remove the engine front cover lower blind plug.
2. Remove the engine front cover upper blind plug.
3. Remove the cylinder block lower blind plug.

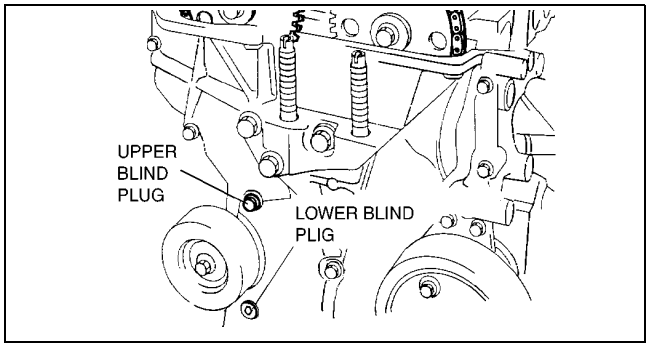

AMJ2212E004

4. Install the SST as shown.
5. Turn the crankshaft clockwise the crankshaft is in the No.1 cylinder TDC position.

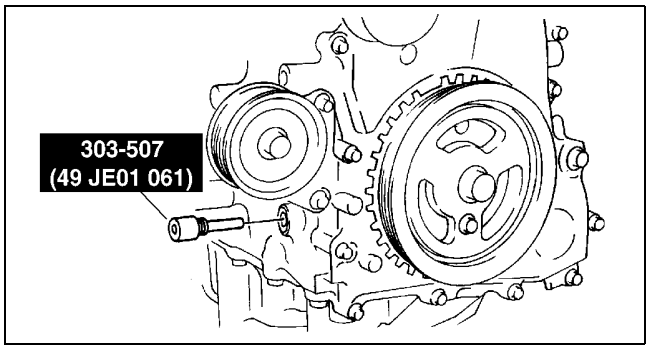

AME2212W004

6. Loosen the timing chain.
   (1) Using a suitable screwdriver or equivalent tool, unlock the chain tensioner ratchet.
   (2) Turn the exhaust camshaft clockwise using a suitable wrench on the cast hexagon and loosened the timing chain.
   (3) Placing the suitable bolt **(M6 X 1.0 Length 25—35 mm {0.9—1.3 in})** at the engine front cover upper blind plug, secure the chain guide at the position where the tension is released.

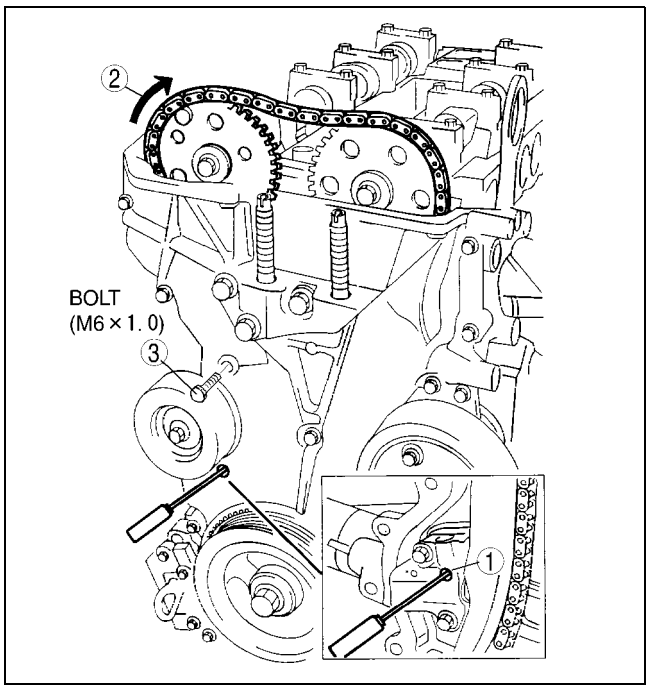

AME2212W005

7. Hold the exhaust camshaft using a suitable wrench on the cast hexagon as shown.

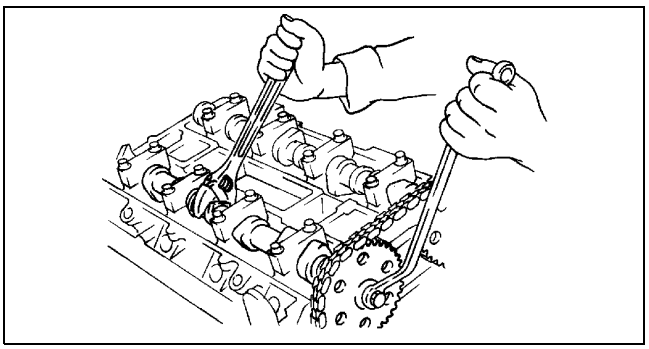

AME2212W006

8. Remove the exhaust camshaft sprocket.

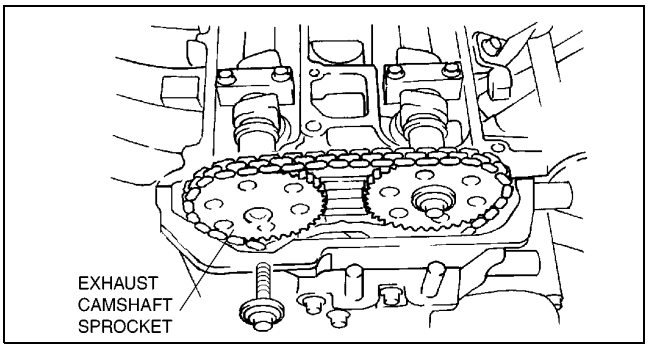

AME2212W007

9. Loosen the camshaft cap bolts in several passes in the order shown.

Note
- The cylinder head and the camshaft caps are numbered to make sure they are reassembled in their original position. When removed, keep the caps with the cylinder head they were removed from. Do not mix the caps.

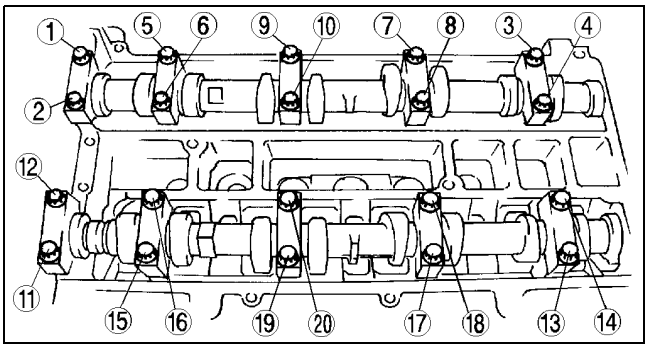

AME2212W008

10. Remove the camshaft.
11. Remove the tappet.
12. Select proper adjustment shim.

New adjustment shim
= Removed shim thickness + Measured valve clearance - Standard valve clearance (IN: 0.25 mm {0.0098 in}, EX: 0.30 mm {0.0118 in})

Standard [Engine cold]
IN: 0.22—0.28 mm {0.0087—0.0110 in} (0.25±0.03 mm {0.0098±0.0011 in})
EX: 0.27—0.33 mm {0.0106—0.0130 in} (0.30±0.03 mm {0.0118±0.0011 in})

13. Install the camshaft with No.1 cylinder aligned with the TDC position.
14. Tighten the camshaft cap bolt using the following two steps.
    (1) Tighten to **5.0—9.0 N·m {51.0—91.7 kgf·cm, 44.3—79.5 in·lbf}**.
    (2) Tighten to **14.0—17.0 N·m {1.5—1.7 kgf·m, 10.4—12.5 ft·lbf}.**

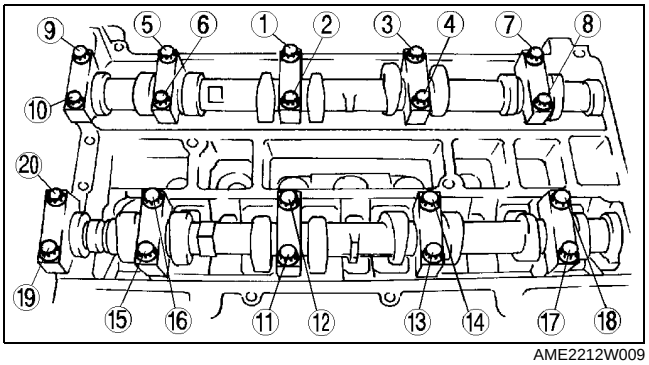

AME2212W009

15. Install the exhaust camshaft sprocket.

Note
- Do not tighten the bolt for the camshaft sprocket during this step. First confirm the valve timing, then tighten the bolt.

16. Install the **SST** to the camshaft as shown.

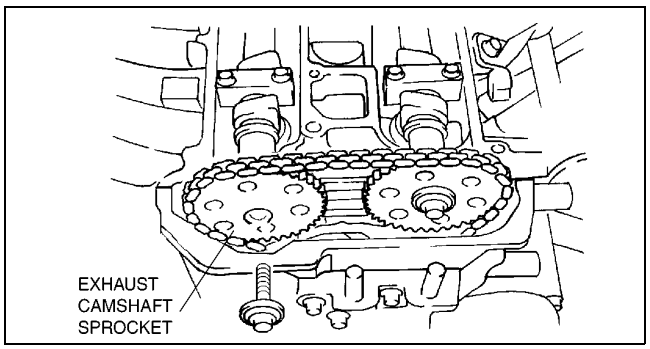

AME2212W007

Europe

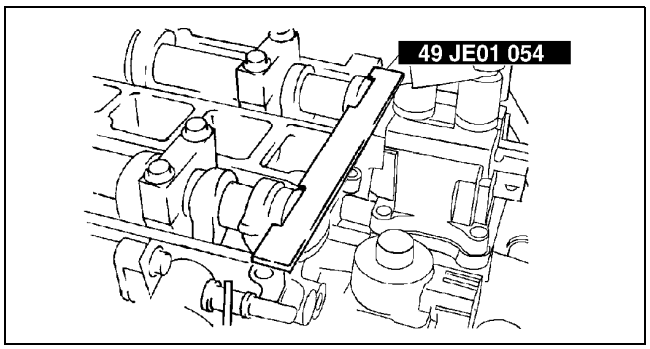

AME2212W010

Except Europe

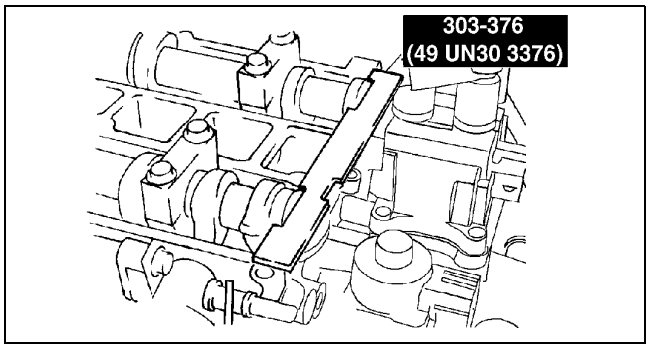

AME2212W011

17. Remove the M6 x 1.0 bolt from the engine front cover to apply tension to the timing chain.
18. Turn the crankshaft clockwise the crankshaft is in the No.1 cylinder TDC position.
19. Hold the exhaust camshaft using a suitable wrench on the cast hexagon as shown.
20. Tighten the exhaust camshaft sprocket lock bolt

Tightening torque
69—75 N·m {7.10—7.6 kgf·m, 50.9—55.3 ft·lbf}

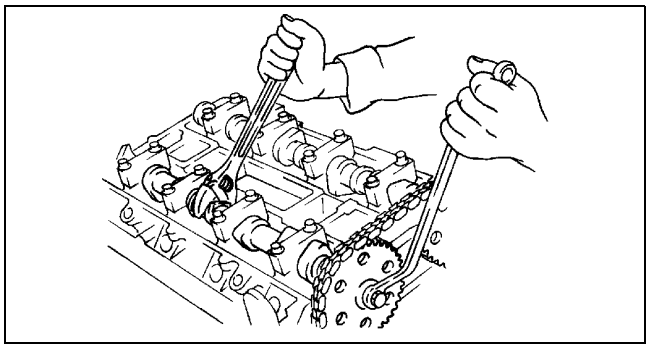
AME2212W006

21. Remove the **SST** from the camshaft.
22. Remove the **SST** from the block lower blind plug.
23. Rotate the crankshaft clockwise two turns until the TDC position.
    - If not aligned, loosen the crankshaft pulley lock bolt and repeat from Step 14.
24. Apply silicone sealant to the engine front cover upper blind plug.

25. Install the engine front cover upper blind plug.

Tightening torque:
10 N·m {1.0 kgf·m, 7.4 ft·lbf}

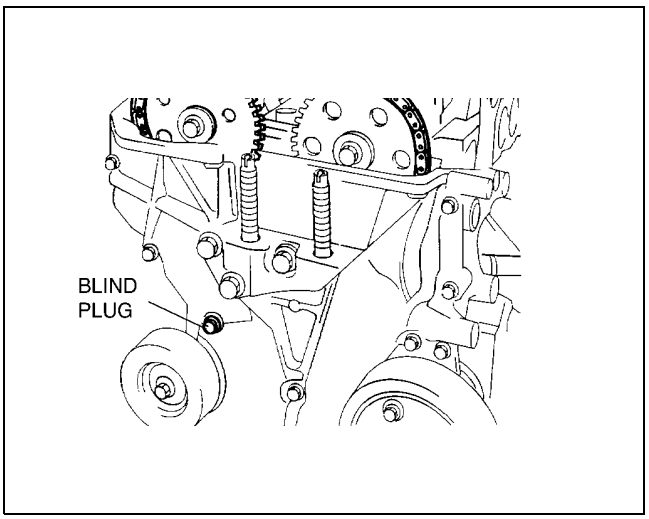

AME2212W003

26. Install the cylinder block lower blind plug.

Tightening torque:
20 N·m {2.0 kgf·m, 14.8 ft·lbf}

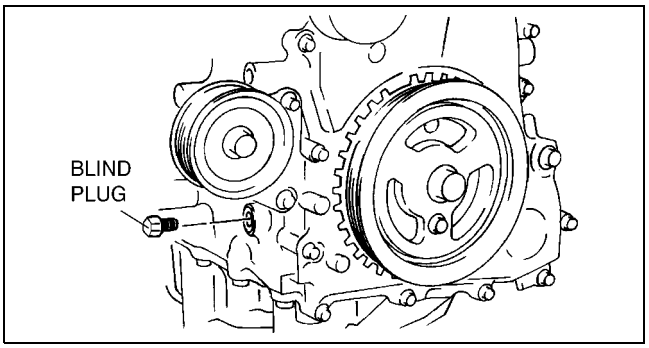

AME2212W012

27. Install the new engine front cover lower blind plug.

Tightening torque:
12 N·m {1.2 kgf·m, 8.9 ft·lbf}

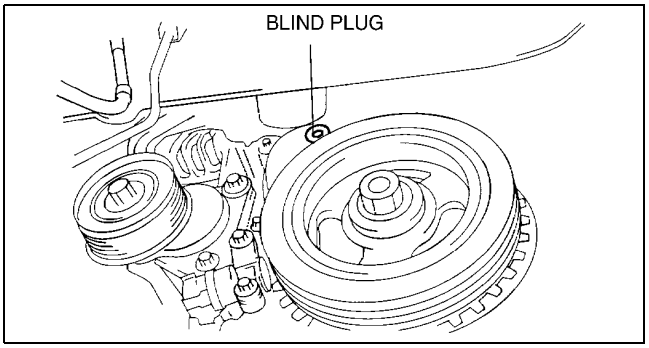

AME2212W002

CYLINDER BLOCK (I) ASSEMBLY

A6E242402000E09

1. Assemble in the order indicated in the table.

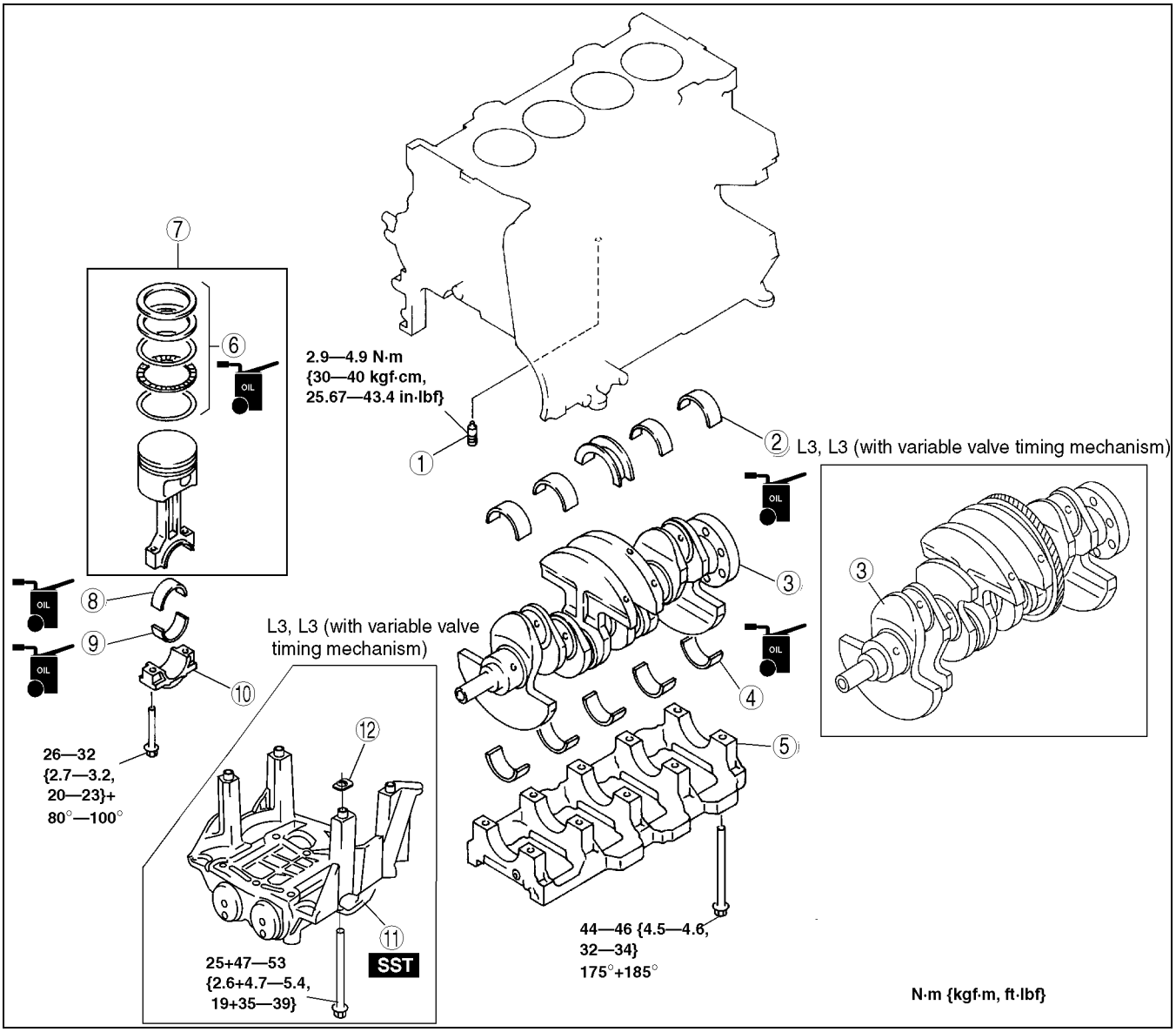

AME2224E039

1	Oil jet valve
2	Upper main bearing, thrust bearing
3	Crankshaft
4	Lower main bearing, thrust bearing
5	Main bearing cap (See B–30 Main Bearing Caps Assembly Note)
6	Piston ring (See B–30 Piston Ring Assembly Note)
7	Connecting rod, Piston assembly (See B–30 Piston Assembly Note)

8	Upper connecting rod bearing (See B–31 Connecting Rod Bearing Assembly Note)
9	Lower connecting rod bearing (See B–31 Connecting Rod Bearing Assembly Note)
10	Connecting rod cap (See B–31 Connecting Rod Cap Assembly Note)
11	Engine balancer (L3 (with variable valve timing mechanism)) (See B–31 Balancer Unit Assembly Note)
12	Adjustment shim

Main Bearing Caps Assembly Note

1. Install the main bearing caps in the order indicated in the figure.

   Tightening torque:
   (1) 44—46 N·m
   {4.5—4.6 kgf·m, 32.5—33.9 ft·lbf}
   (2) 175°—185°

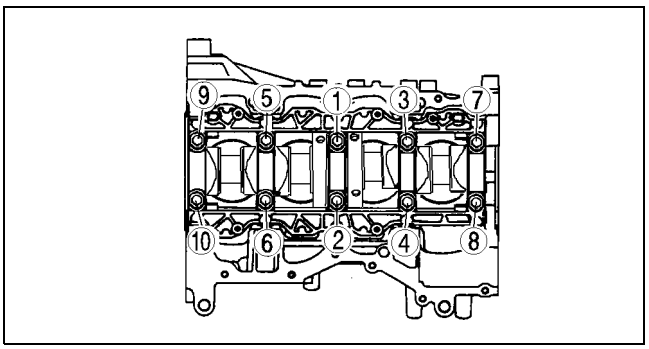

AME2224E052

Piston Ring Assembly Note

1. Install the two oil control ring segments and spacer.
2. Verify that the second ring is installed with scraper face side downward.
3. Verify that the top ring is installed with scraper face side inner of upper.

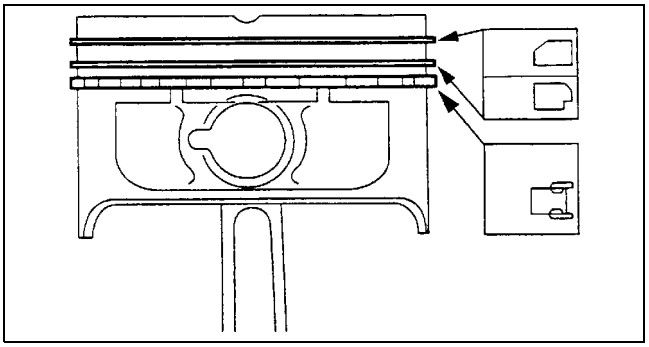

AME2224E322

Piston Assembly Note

1. Position the end gap of each ring as indicated in the figure.

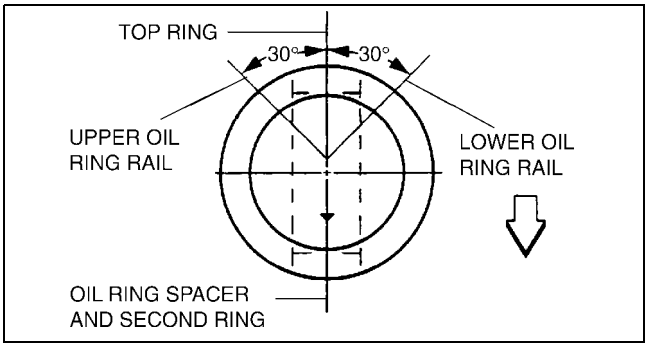

AME2224E323

2. Insert the piston and connecting rod into the cylinder with the arrow mark to front of the engine.

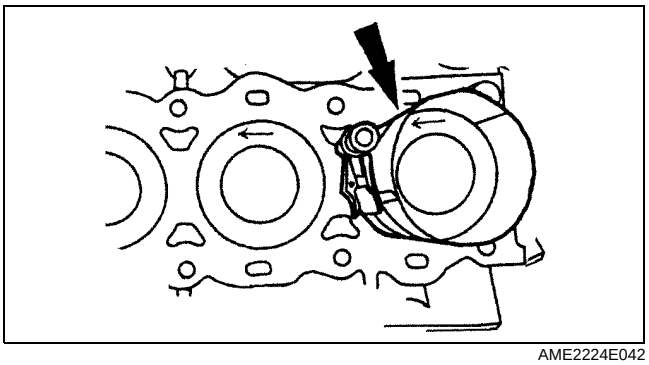

AME2224E042

Connecting Rod Bearing Assembly Note

1. Install the connecting rod bearing to the connecting rod and connecting rod caps, as shown in the figure.

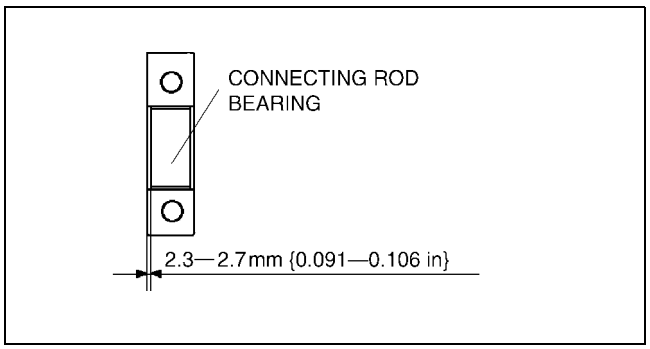

AME2224E053

Connecting Rod Cap Assembly Note

Caution
- **When assembling the connecting rod caps, align the broken, rough faces of the connecting rods and connecting rod caps.**

1. Tighten the connecting rod bolts in two steps.

Tightening torque:
(1) 26—32 N·m
{2.7—3.2 kgf·m, 19.2—23.6 ft·lbf}
(2) 80°—100°

Balancer Unit Assembly Note

1. Confirm by visual inspection that there is no damage to the balancer unit gear and verify that the shaft turns smoothly.
   - If there is any damage or malfunction, replace the balancer unit.

Caution
- **Due to the precision interior construction of the balancer unit, it cannot be disassembled.**

2. Rotate the crankshaft clockwise and align the No. 1 cylinder to the TDC.
3. Install the adjustment shim to the seat face of the balancer unit.
4. With the balancer unit marks at the exact top center, assemble the unit to the cylinder block.

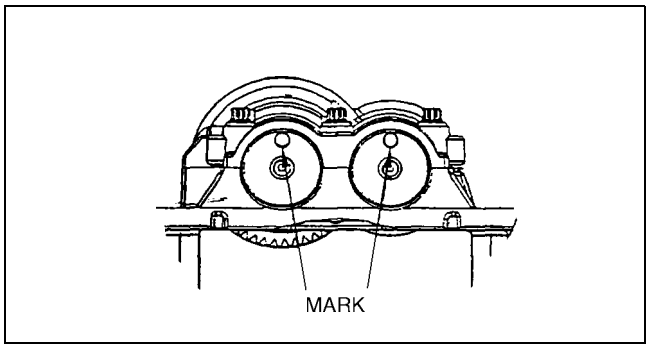

AME2224E061

5. Insert a screwdriver into the crankshaft No. 1 crankweight area and set both the rotation and the thrust direction with the screwdriver, using a prying action, as shown.

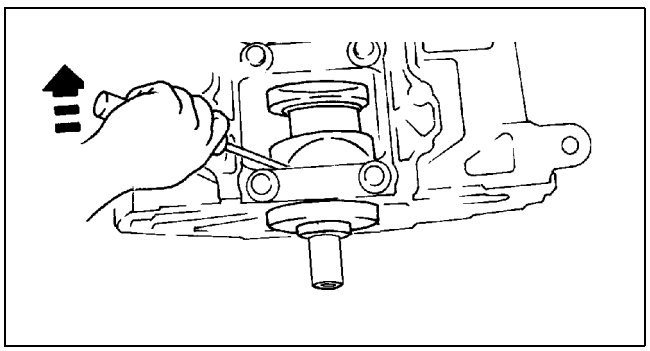

AME2224E080

6. Set the SST as shown, then measure the gear backlash using a dial gauge.
   - If the backlash exceeds the specified range, remeasure the backlash and, using the adjustment shim selection table, select the proper shim, according to the following procedure.

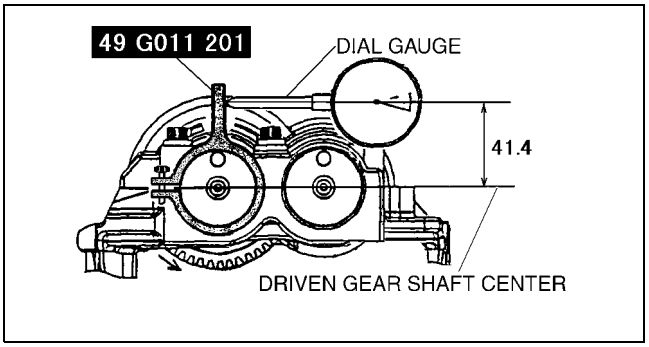

AME2224E060

Caution
- **When measuring the backlash, rotate the crankshaft one full rotation and verify that it is within the specified range at all of the following six positions: 10°, 30°, 100°, 190°, 210°, 280° ATDC.**

Value range:
0.005—0.101 mm {0.00019—0.0039 in}

(1) Using master adjustment shim (No.50), assemble the balancer unit to the cylinder block, then measure the backlash.
(2) Select the proper adjustment shim according to the measured value.
(3) Install the selected adjustment shim to the balancer unit, then assemble the balancer unit to the cylinder block.

Adjustment shim selection table

Backlash mm {in}	Selection shim (No.)	Shim thickness mm {in}	Backlash mm {in}	Selection shim (No.)	Shim thickness mm {in}
0.256—0.262 {0.0100—0.01031}	15	1.15 {0.0452}	0.116—0.122 {0.00456—0.00480}	35	1.35 {0.0531}
0.249—0.255 {0.0098—0.010039}	16	1.16 {0.0456}	0.109—0.115 {0.00429—0.00452}	36	1.36 {0.0535}
0.242—0.248 {0.0096—0.00976}	17	1.17 {0.0460}	0.102—0.108 {0.00401—0.00425}	37	1.37 {0.0539}
0.235—0.241 {0.0093—0.0948}	18	1.18 {0.0464}	0.095—0.101 {0.00374—0.00397}	38	1.38 {0.0543}
0.228—0.234 {0.00897—0.00921}	19	1.19 {0.0468}	0.088—0.094 {0.00346—0.00370}	39	1.39 {0.0547}
0.221—0.227 {0.00870—0.00893}	20	1.20 {0.0472}	0.081—0.087 {0.00318—0.00342}	40	1.40 {0.0551}
0.214—0.220 {0.00842—0.00874}	21	1.21 {0.0476}	0.074—0.080 {0.00291—0.00314}	41	1.41 {0.0555}
0.207—0.213 {0.00814—0.00838}	22	1.22 {0.0480}	0.067—0.073 {0.00263—0.00287}	42	1.42 {0.0559}
0.200—0.206 {0.00787—0.00811}	23	1.23 {0.0484}	0.060—0.066 {0.00236—0.00259}	43	1.43 {0.0562}
0.193—0.199 {0.00759—0.00783}	24	1.24 {0.0488}	0.053—0.059 {0.00208—0.00232}	44	1.44 {0.0566}
0.186—0.192 {0.00732—0.00755}	25	1.25 {0.492}	0.046—0.052 {0.00181—0.00204}	45	1.45 {0.0570}
0.179—0.185 {0.00704—0.00728}	26	1.26 {0.496}	0.039—0.045 {0.00153—0.00177}	46	1.46 {0.0574}

Backlash mm {in}	Selection shim (No.)	Shim thickness mm {in}	Backlash mm {in}	Selection shim (No.)	Shim thickness mm {in}
0.172—0.178 {0.00677—0.00700}	27	1.27 {0.499}	0.032—0.038 {0.00125—0.00149}	47	1.47 {0.0578}
0.165—0.171 {0.00649—0.00673}	28	1.28 {0.503}	0.025—0.031 {0.000984—0.00122}	48	1.48 {0.0582}
0.158—0.164 {0.00622—0.00645	29	1.29 {0.507}	0.018—0.024 {0.000708—0.000944}	49	1.49 {0.0586}
0.151—0.157 {0.00594—0.00618}	30	1.30 {0.511}	0.011—0.017 {0.000433—0.000669}	50 (master)	1.50 {0.0590}
0.144—0.150 {0.0566—0.0590}	31	1.31 {0.515}	0.004—0.010 {0.00015—0.000393}	51	1.51 {0.0594}
0.137—0.143 {0.00539—0.00562}	32	1.32 {0.519}	0.000—0.004 {0.000—0.000157}	52	1.52 {0.0598}
0.130—0.136 {0.00511—0.00535}	33	1.33 {0.523}	0.000—0.000 {0.000—0.000}	53	1.53 {0.0602}
0.123—0.129 {0.00484—0.00507}	34	1.34 {0.527}	0.000—0.000 {0.000—0.000}	54	1.54 {0.0606}

CYLINDER BLOCK (II) ASSEMBLY

A6E242402000E10

1. Assemble in the order indicated in the table.

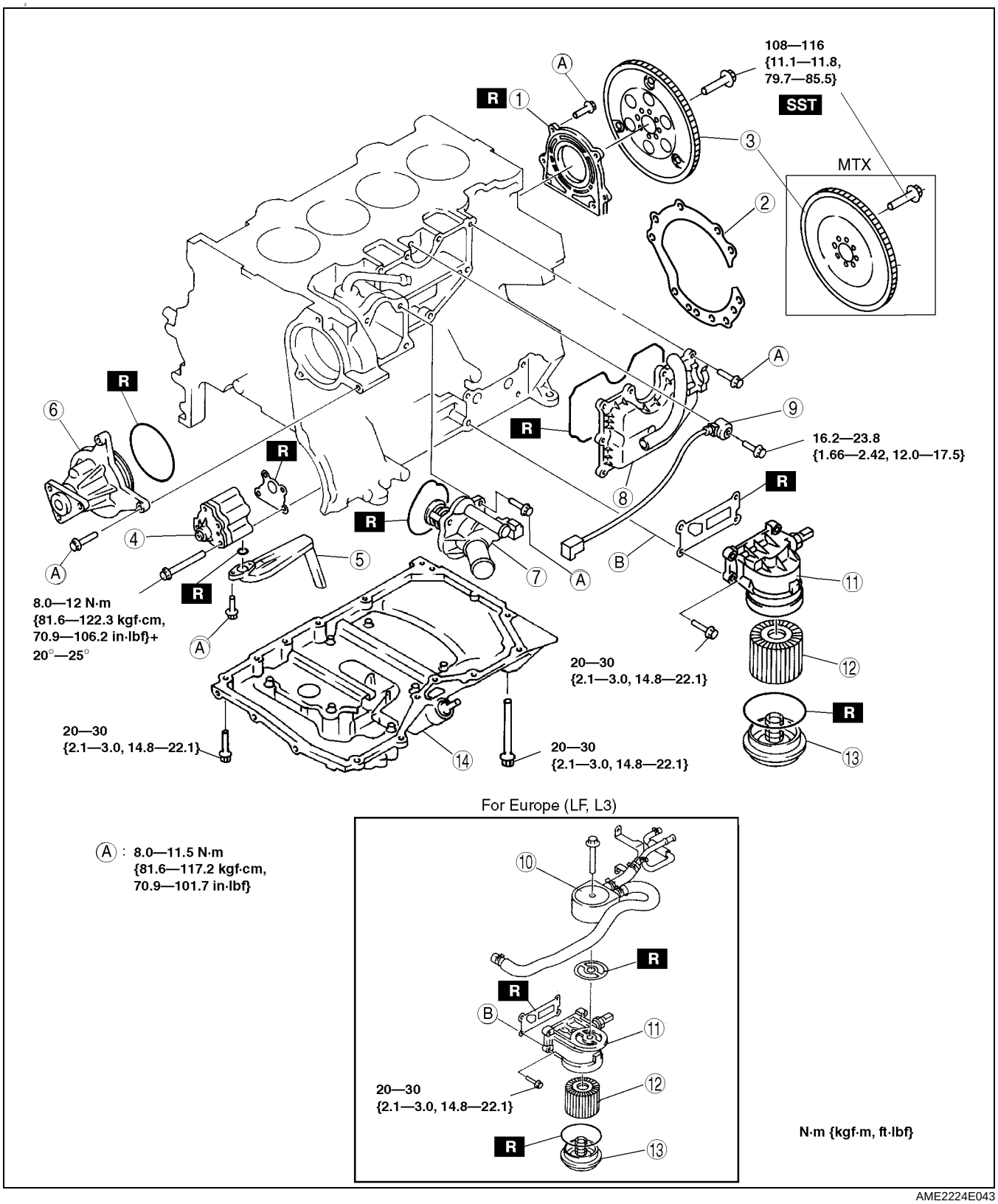

AME2224E043

1	Rear oil seal (See B–35 Rear Oil Seal Assembly Note)
2	End plate (MPV)
3	Flywheel (MTX), Drive plate (ATX) (See B–36 Drive Plate (ATX), Flywheel (MTX) Assembly Note)
4	Oil pump
5	Oil strainer
6	Water pump
7	Thermostat

8	Oil separator
9	Knock sensor
10	Oil cooler
11	Oil filter adapter
12	Oil filter
13	Oil filter cover
14	Oil pan (See B–36 Oil pan Assembly Note)
15	MTX

Rear Oil Seal Assembly Note

1. Apply silicone sealant to the mating faces as shown.

   Dot diameter:
   4.0—6.0 mm {0.16—0.23 in}

2. Apply clean engine oil to the new oil seal lip.

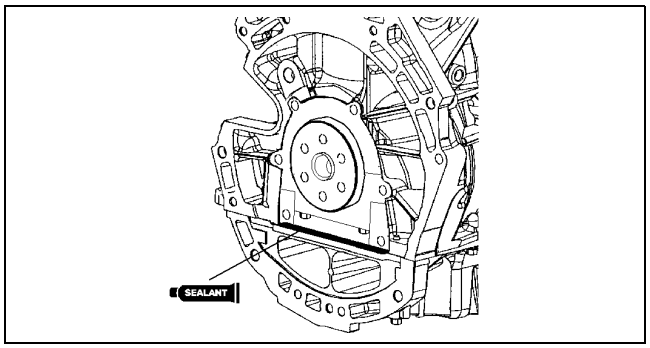

AME2224E325

3. Install the rear oil seal using the installer as shown.

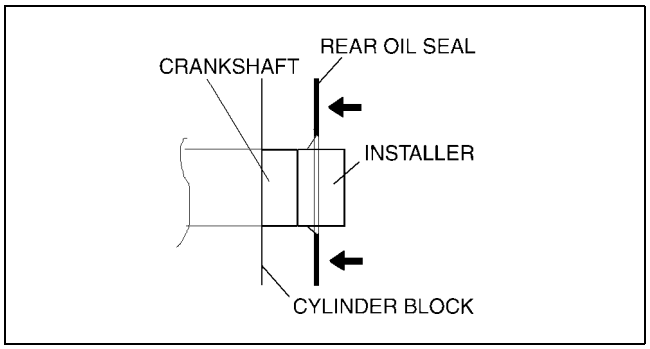

AME2224E326

4. Tighten the rear oil seal bolts in the order as shown.

   Tightening torque:
   8.0—11.5 N·m {81.6—117.2 kgf·m, 70.9—101.7 in·lbf}

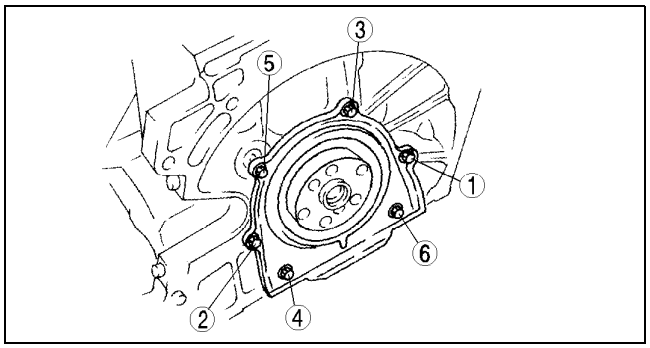

AME2224E002

Drive Plate (ATX), Flywheel (MTX) Assembly Note

1. Hold the crankshaft using the **SST**.
2. Tighten the bolts in the order indicated in the figure in several passes.

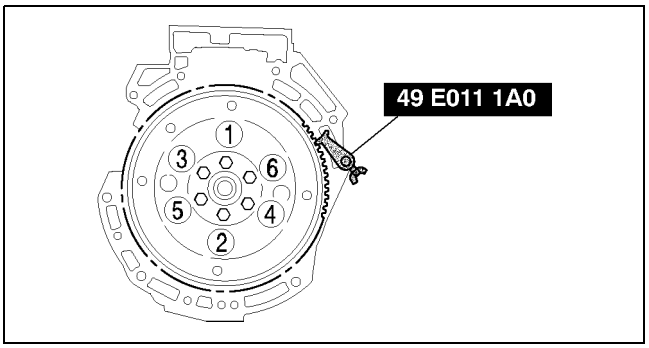

AME2224E102

Oil pan Assembly Note

1. Apply a continuous bead of silicone sealant to the oil pan as indicated in the figure.

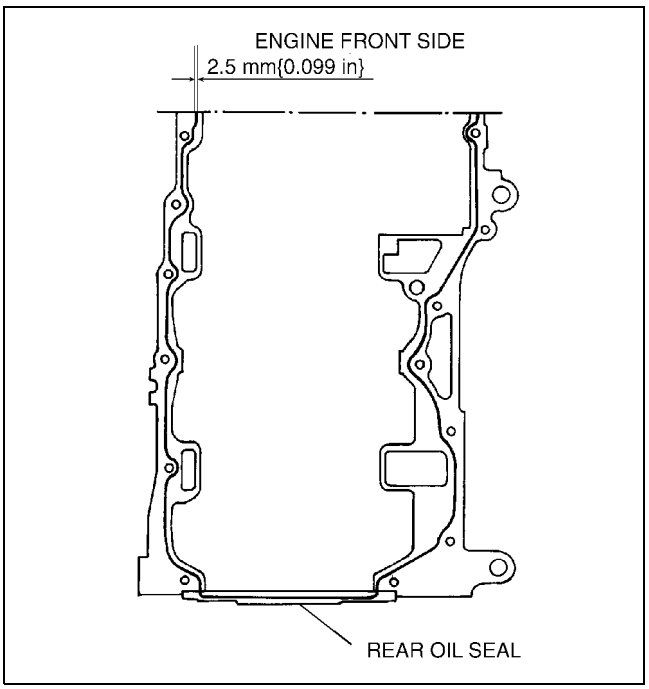

AME2224E555

2. Use a square ruler to unite the oil pan and the cylinder block junction side on the engine front cover side.

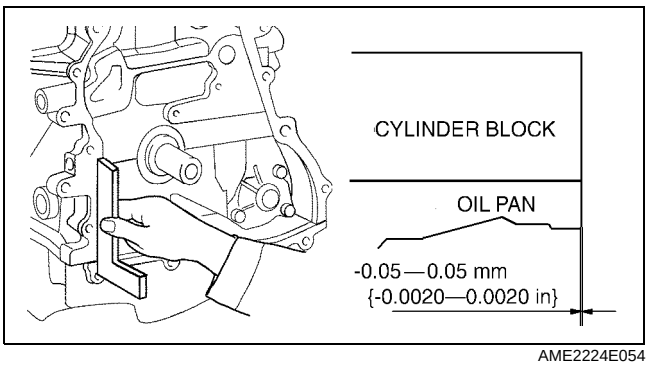

AME2224E054

3. Tighten the rear oil pan bolts in the order as shown.

Tightening torque:
20—30 N·m {2.1—3.0 kgf·m, 15.2—21.6 in·lbf}

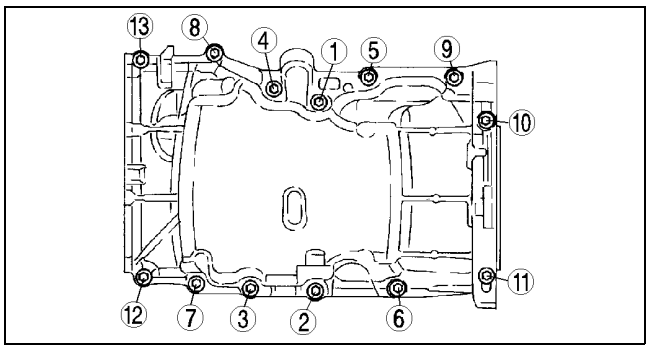

AME2224E056

CYLINDER HEAD (I) ASSEMBLY

A6E242402000E11

1. Assemble in the order indicated in the table.

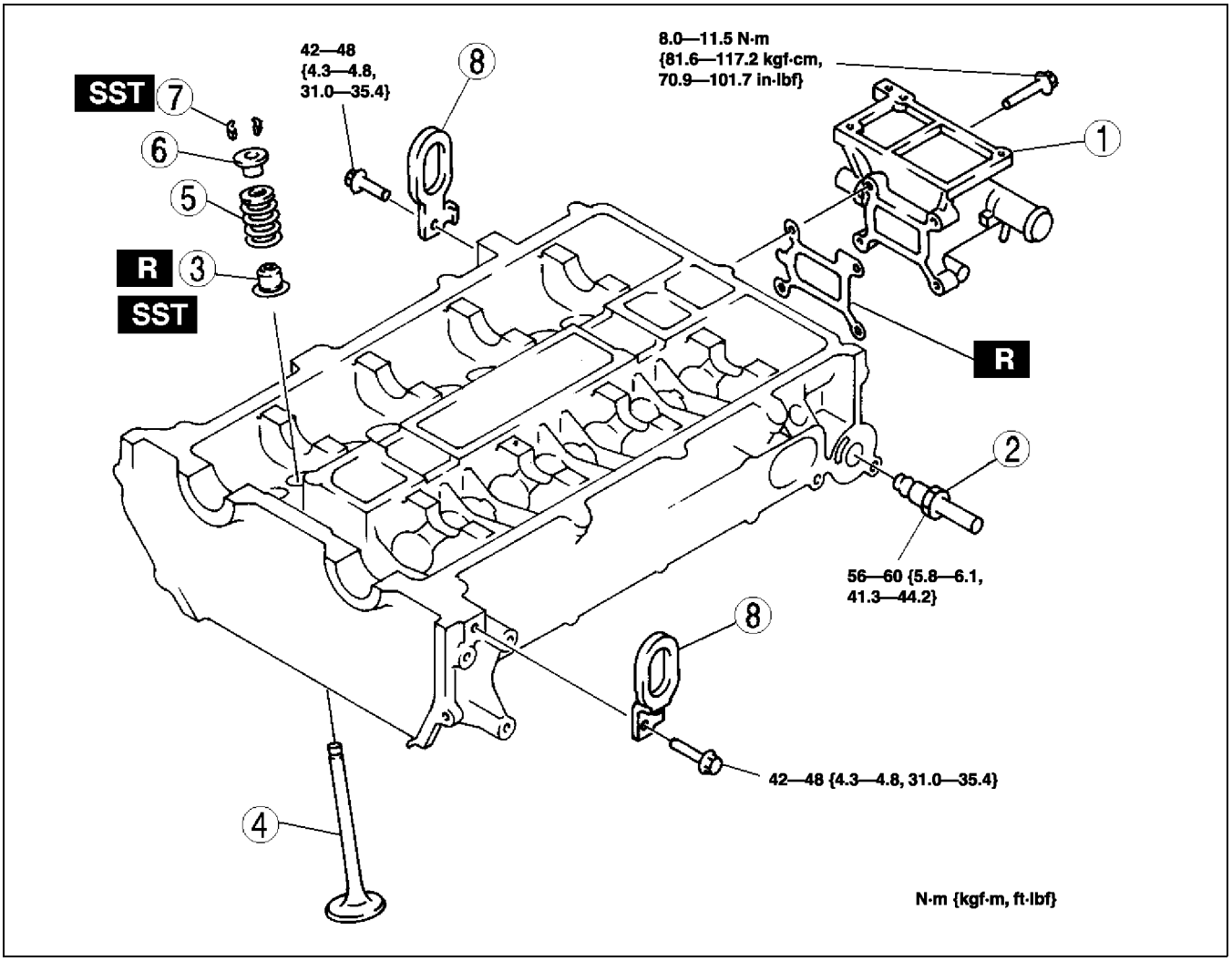

AME2224E044

1	Water outlet case
2	EGR pipe
3	Valve seal (See B–38 Valve Seal Assembly Note)
4	Valve

5	Valve spring
6	Upper valve spring seat
7	Valve keeper (See B–38 Valve Keeper Assembly Note)
8	Engine hanger

Valve Seal Assembly Note

1. Press the valve seal onto the valve guide by hand.
2. Lightly tap the **SST** using a plastic hammer.

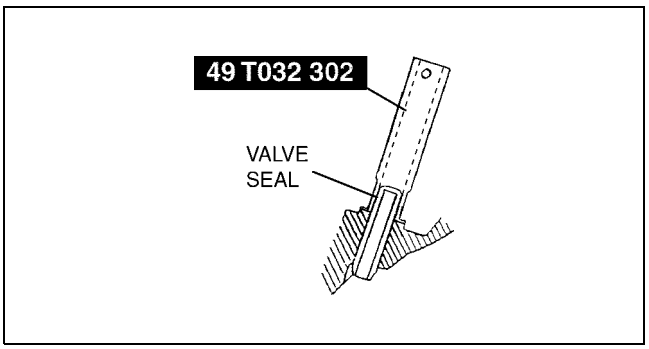

AME2224E321

Valve Keeper Assembly Note

1. Install the valve keeper using the **SSTs**.

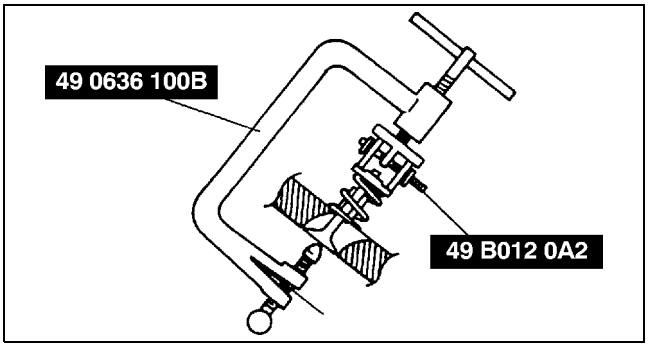

AME2224E302

CYLINDER HEAD (II) ASSEMBLY

A6E242402000E12

1. Assemble in the order indicated in the table.

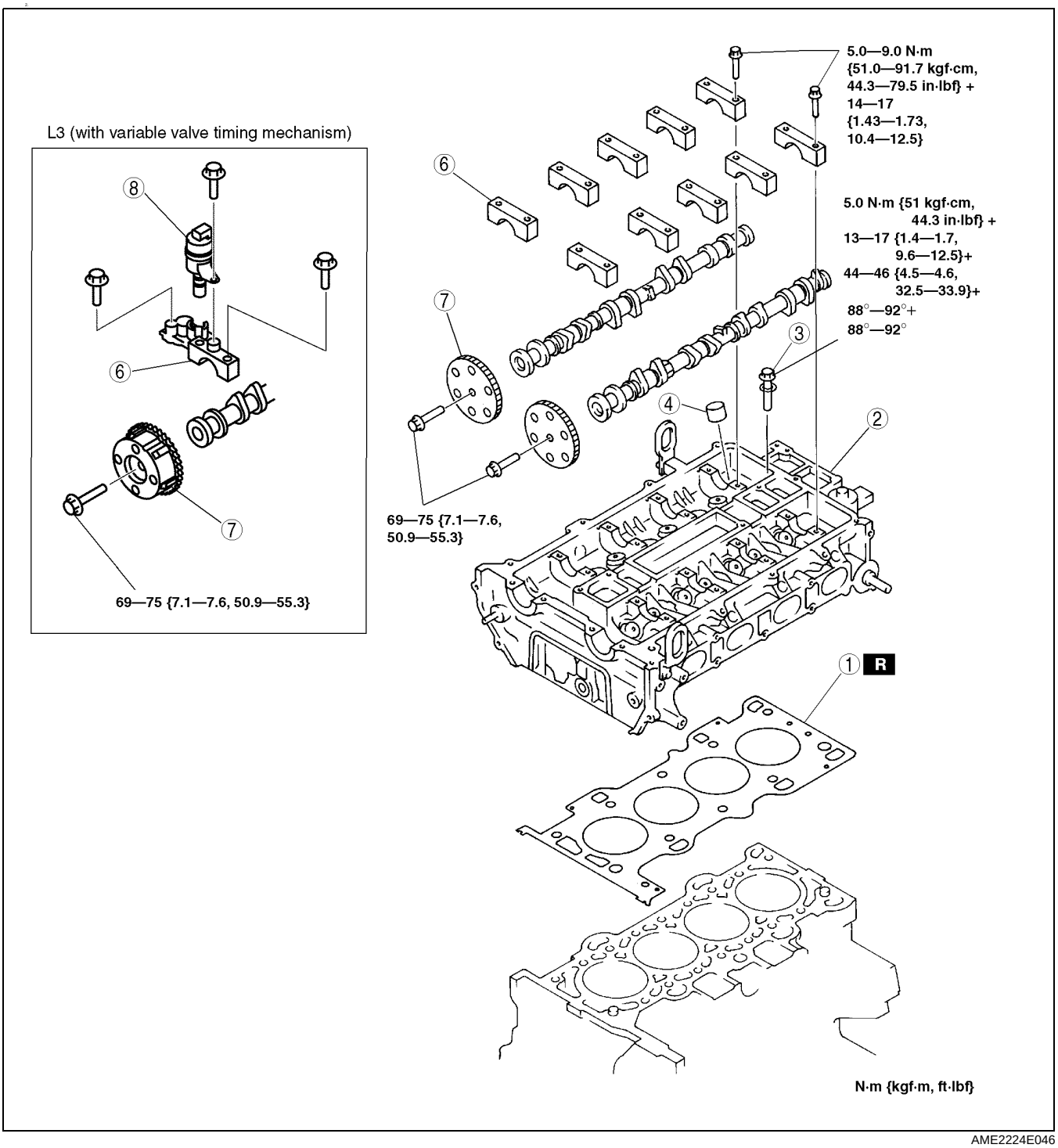

AME2224E046

1	Cylinder head gasket
2	Cylinder head
3	Cylinder head bolt (See B–40 Cylinder Head Bolt Assembly Note)
4	Tappet
5	Camshaft (See B–40 Camshaft Assembly Note)

6	Camshaft cap
7	Camshaft sprocket, Variable valve timing actuator (L3 (with variable valve timing mechanism)) (See B–40 Camshaft Sprocket, Variable Valve Timing Actuator (L3 (with variable valve timing mechanism)) Assembly Note)
8	Oil control valve (OCV) (L3 (with variable valve timing mechanism))

Cylinder Head Bolt Assembly Note

1. Tighten the cylinder head bolts in the order indicated in the figure in six steps.
   (1) Tighten to **5.0 N·m {51 kgf·cm, 44.3 in·lbf}**.
   (2) Tighten to **13— 17 N·m {1.4 —1.7 kgf·m, 9.6—12.5 ft·lbf}.**
   (3) Tighten to **44— 46 N·m {4.5 —4.6 kgf·m, 32.5—33.9 ft·lbf}**.
   (4) Tighten **88°—92°**.
   (5) Tighten **88°—92°**.

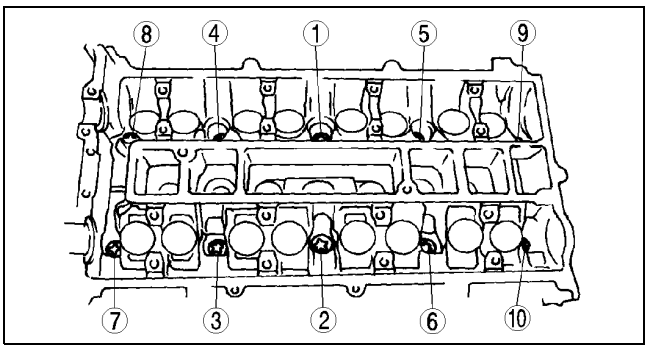

AME2224E047

Camshaft Assembly Note

1. Install the camshaft with No.1 cylinder aligned with TDC position.
2. Tighten the camshaft cap bolt using the following two steps.
   (1) Tighten to **5.0—9.0 N·m {51.0—91.7 kgf·cm, 44.3—79.5 in·lbf}**.
   (2) Tighten to **14.0—17.0 N·m {1.5—1.7 kgf·m, 10.4—12.5 ft·lbf}.**

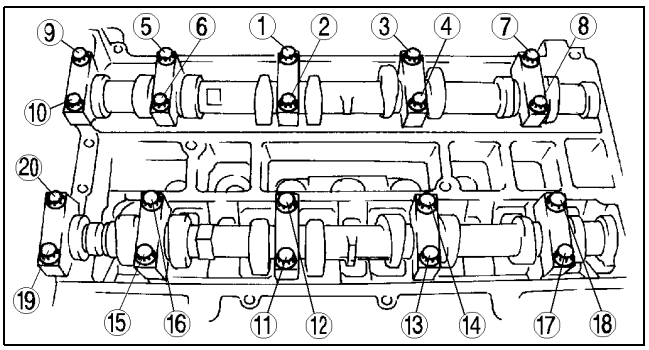

AME2224E048

Camshaft Sprocket, Variable Valve Timing Actuator (L3 (with variable valve timing mechanism)) Assembly Note

1. Camshaft sprocket or variable valve timing actuator (L3 (with variable valve timing mechanism)) attachment bolt is changed into the state of a temporary bundle by hand until it attaches timing chain.
2. The attachment bolt of camshaft sprocket or variable valve timing actuator (L3 (with variable valve timing mechanism)) is bound tight for timing chain after attachment.

Tightening torque
69—75 N·m {7.10—7.60 kgf·m, 50.9—55.3 ft·lbf}

L8, LF, L3

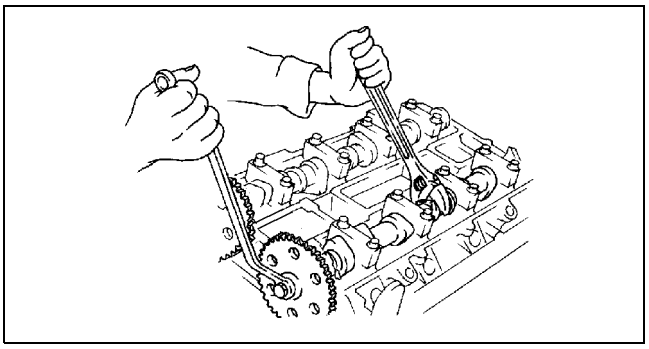
AME2224E077

L3 (with variable valve timing mechanism)

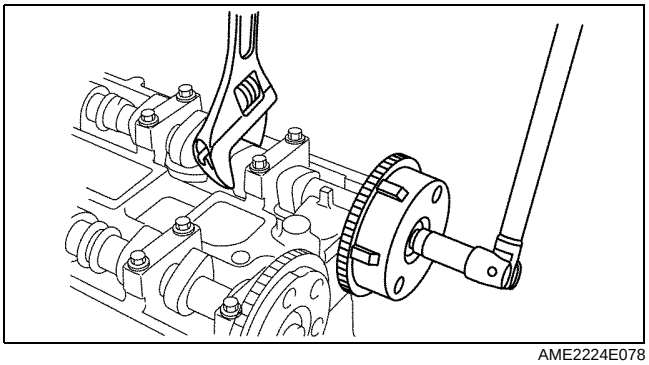
AME2224E078

TIMING CHAIN ASSEMBLY

A6E242402000E13

1. Assemble in the order indicated in the table.

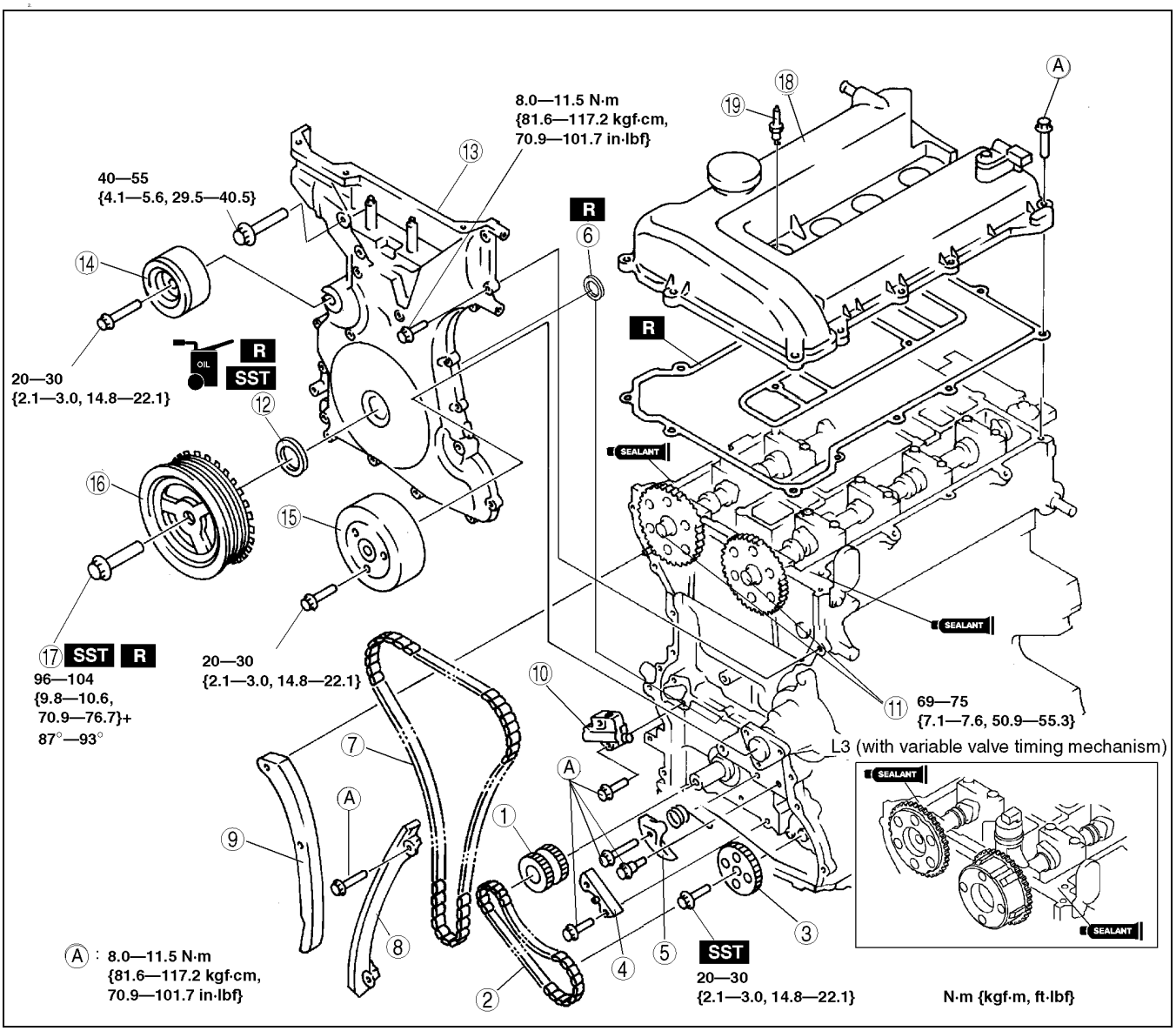

AME2224E327

1	Crankshaft sprocket
2	Oil pump chain
3	Oil pump sprocket (See B–42 Oil Pump Sprocket Assembly Note)
4	Oil pump chain guide
5	Oil pump chain tensioner
6	Seal (L3 (with variable valve timing mechanism))
7	Timing chain (See B–42 Timing Chain Aassembly Note)
8	Chain guide
9	Tensioner arm
10	Chain tensioner
11	Camshaft sprocket, Variable Valve Timing Actuator (L3 (with variable valve timing mechanism)) (See B–43 Camshaft Sprocket, Variable Valve Timing Actuator (L3 (with variable valve timing mechanism)) Assembly Note)

12	Front oil seal (See B–44 Front Oil Seal Aassembly Note)
13	Engine front cover (See B–44 Engine Front Cover Aassembly Note)
14	Drive belt idler pulley
15	Water pump pulley
16	Crankshaft pulley
17	Crankshaft pulley lock bolt (See B–45 Crankshaft Pulley Lock Bolt Aassembly Note)
18	Cylinder head cover (See B–46 Cylinder Head Cover Aassembly Note)
19	Spark plug

Oil Pump Sprocket Assembly Note

1. Hold the oil pump sprocket using the **SST**.

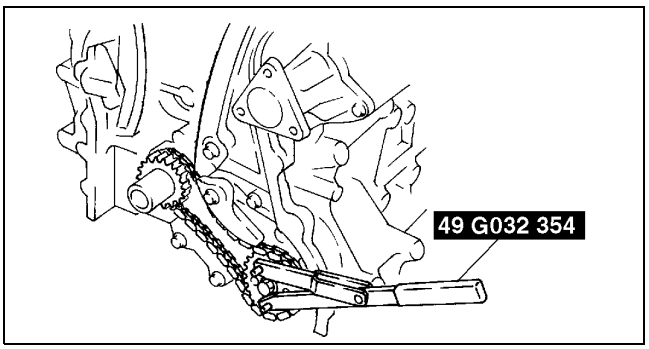

AME2224E340

Timing Chain Aassembly Note

1. Install the **SST** to the camshaft, then align the No. 1 camshaft position with the TDC.

Europe

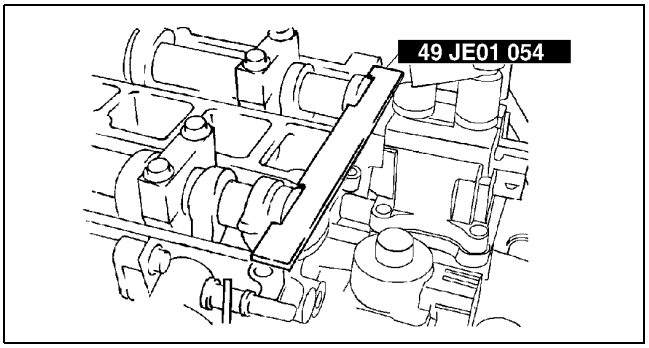

AME2224E329

Except Europe

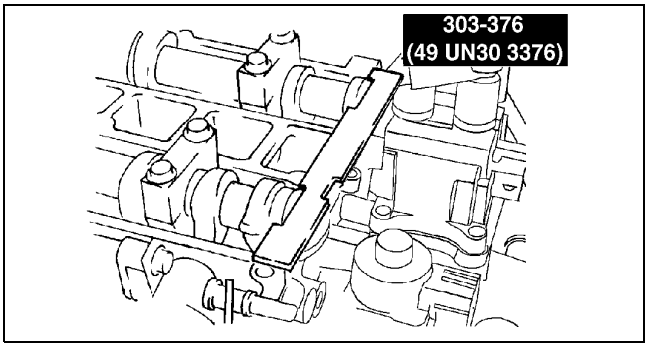

AME2224E328

2. Remove the cylinder block lower blind plug.
3. Install the **SST** as shown.
4. Turn the crankshaft clockwise so that the crankshaft is in the No.1 cylinder TDC position.
5. Install the timing chain.

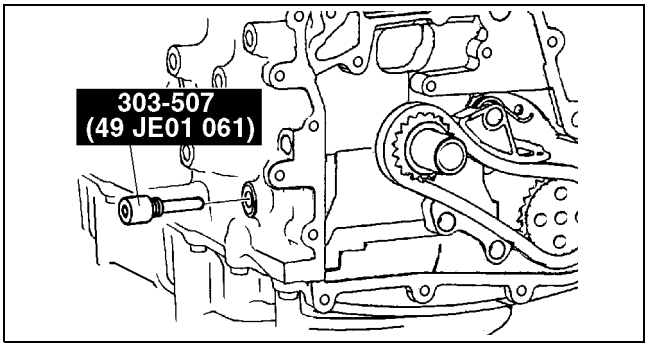

AMJ2224E666

6. Install the chain tensioner and remove the retaining wire.

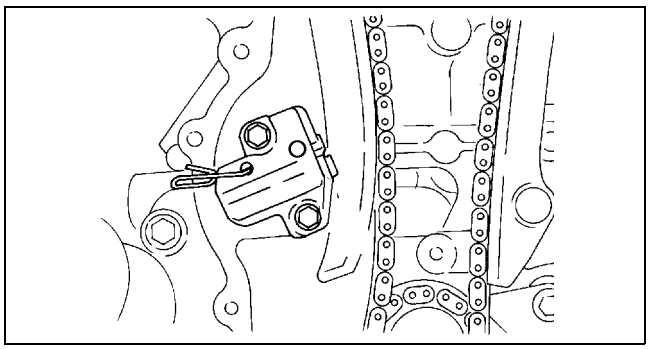

AME2224E330

Camshaft Sprocket, Variable Valve Timing Actuator (L3 (with variable valve timing mechanism)) Assembly Note

1. Hold the camshaft using a suitable wrench on the cast hexagon as shown.

L8, LF, L3

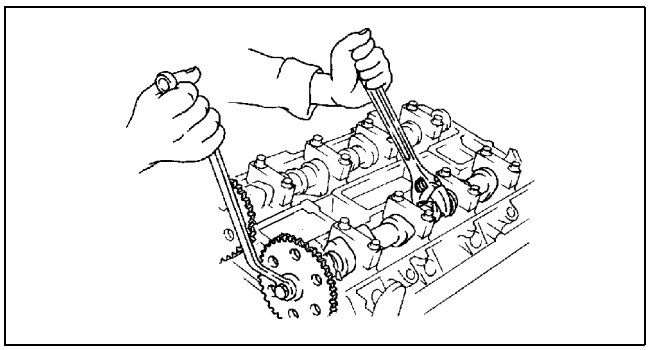

AME2224E077

L3 (with variable valve timing mechanism)

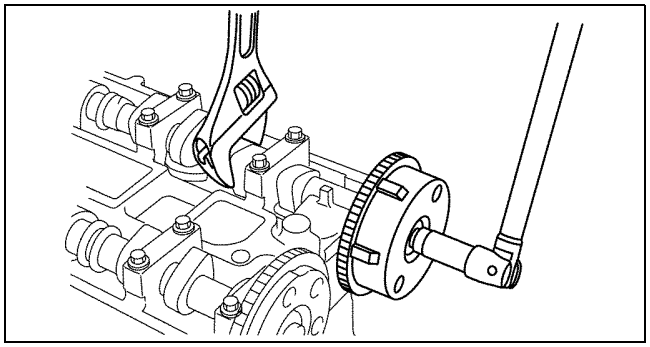

AME2224E078

2. Tighten the camshaft sprocket lock bolt.

Tightening torque: 69—75 N·m {7.10—7.6 kgf·m, 50.9—55.3 ft·lbf}

Front Oil Seal Aassembly Note

1. Apply clean engine oil to the oil seal.
2. Push the oil seal slightly in by hand.
3. Compress the oil seal using the SST and a hammer.

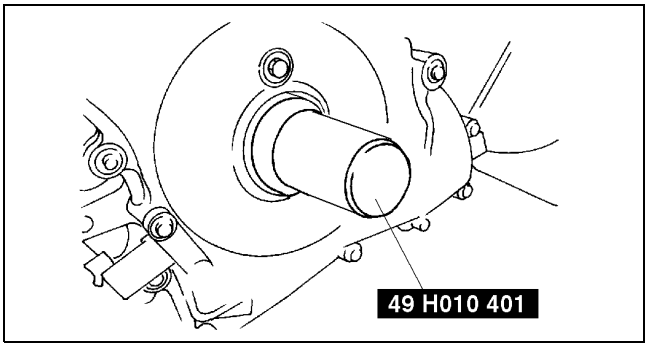

AME2224E331

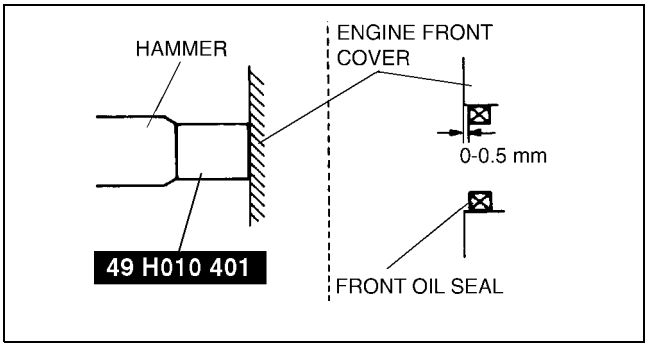

AME2224E332

Engine Front Cover Aassembly Note

1. Apply silicone sealant to the engine front cover as shown.

Caution

- **Install the cylinder head cover within 10 minutes of applying the silicone sealant.**
- **Silicone sealant is not need in area C as indicated below due to an existing. (L3 (with variable valve timing mechanism))**

Thickness

A: 2.0—3.0 mm {0.079—0.118 in}
B: 1.5—2.5 mm {0.059—0.098 in}

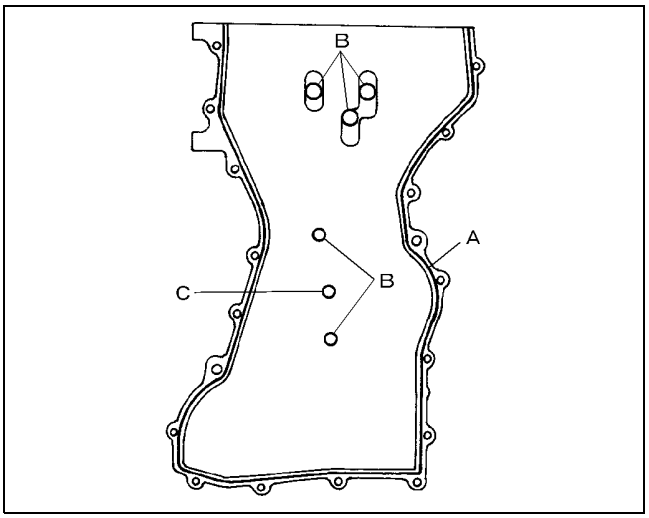

AME2224E333

2. Install the cylinder head cover bolts in the order as shown.

Bolt No.	Tigtining torque N·m {kgf·m, ft·lbf}
1—18	8.0—11.5 N·m {81.6—117.2 kgf·cm, 70.9—101.7 in·lbf}
19—22	40—55 {4.1—5.6, 29.7—40.5}

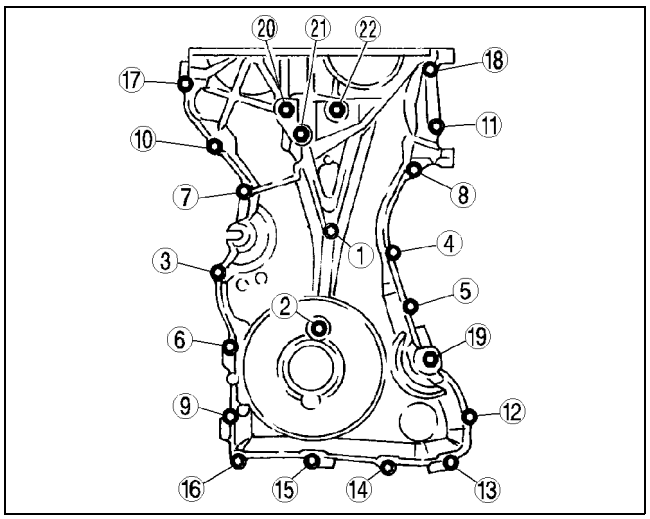

AME2224E334

Crankshaft Pulley Lock Bolt Aassembly Note

1. Install the **SST** to the camshaft as shown.

Europe

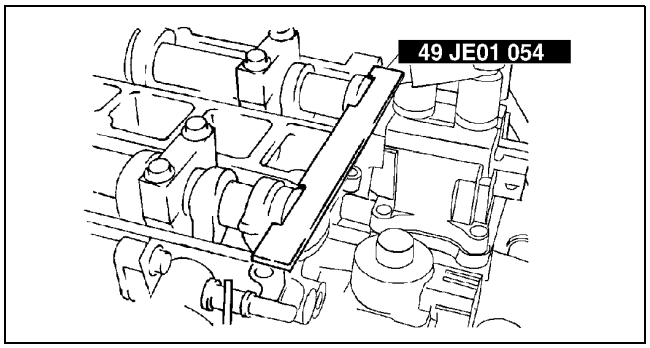

AME2224E329

Except Europe

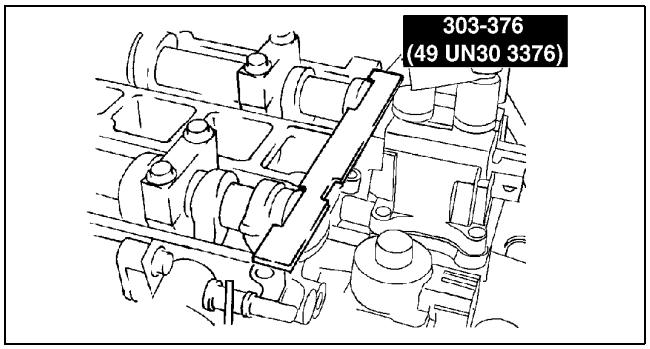

AME2224E328

2. Install the M6 x 1.0 bolt in by hand.
3. Turn the crankshaft clockwise so that the crankshaft is in the No.1 cylinder TDC position.

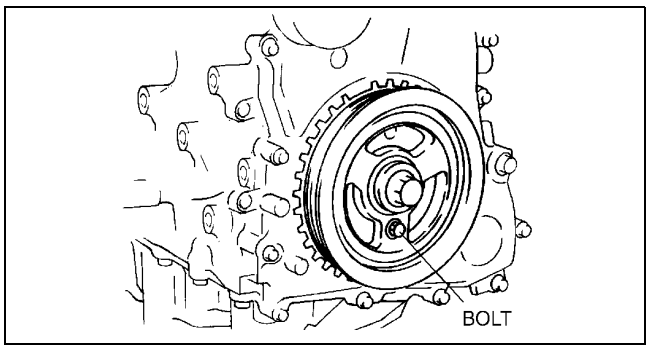

AME2224E009

4. Hold the crankshaft pully using the **SST**.
5. Tighten the crankshaft pulley lock bolt in the following two steps.
   (1) Tighten to **96—104 N·m {9.8—10.6 kgf·m, 70.9—76.7 ft·lbf}**
   (2) Tighten **87°—93° .**
6. Remove the M6 x 1.0 bolt.
7. Remove the **SST** from the camshaft.
8. Remove the **SST** from the block lower blind plug.
9. Rotate the crankshaft clockwise two turns until the TDC position.
   - If not aligned, loosen the crankshaft pulley lock bolt and repeat from Step 1.
10. Install the cylinder block lower blind plug.

Tightening torque: 20 N·m {2.0 kgf·m, 14.8 ft·lbf}

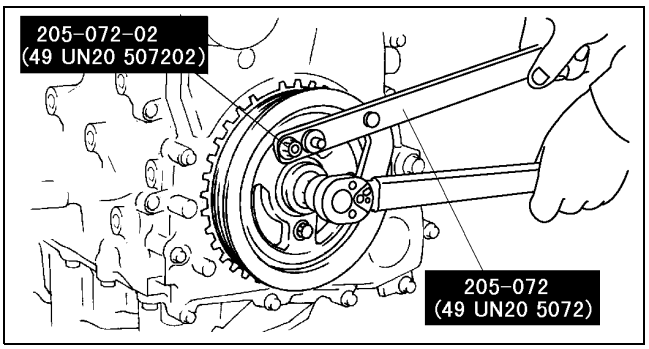

AME2224E015

Cylinder Head Cover Aassembly Note

1. Apply silicone sealant to the mating faces as shown.

   Caution
   - **Install the cylinder head cover within 10 minutes of applying the silicone sealant.**

   Dot diameter: 4.0—6.0 mm {0.16—0.23 in}

2. Install the cylinder head cover with a new gasket.

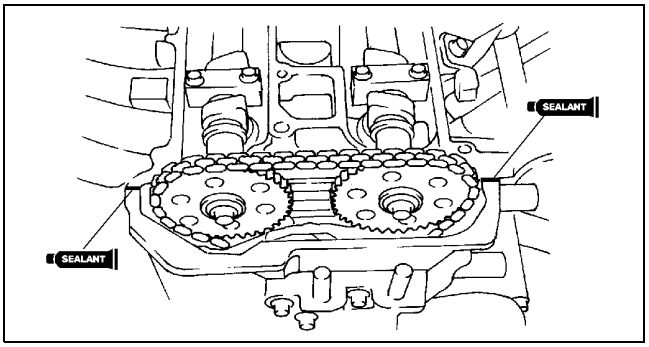

AME2224E335

3. Tighten the bolts in the order shown.

   Tightening torque: 8.0 —12 N·m {81.6—122.3 kgf·cm, 70.9—106.2 in·lbf}

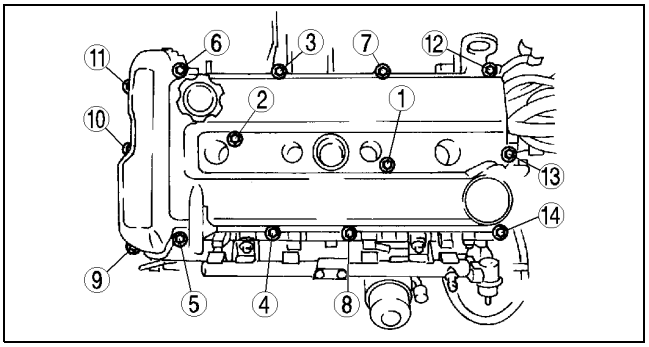

AME2224E336

TECHNICAL DATA

TECHNICAL DATA TD-2
ENGINE TECHNICAL DATA TD-2

TECHNICAL DATA

ENGINE TECHNICAL DATA

A6E931001001E01

Item				Engine		
				L8	LF	L3, L3 (with variable valve timing mechanism)
Cylinder head						
Cylinder head gasket contact surfaces distortion	(mm {in})	Maximum		0.10 {0.004}		
Manifold contact surfaces distortion	(mm {in})	Maximum		0.10 {0.004}		
		Maximum grinding		0.15 {0.006}		
Valve clearance [Engine cold]	(mm {in})		IN	0.22—0.28 {0.0087—0.0110}		
			EX	0.27—0.33 {0.0106—0.0130}		
Valve and valve guide						
Valve stem diameter	(mm {in})	Standard	IN	5.470—5.485 {0.2154—0.2159}		
			EX	5.465—5.480 {0.2152—0.2157}		
		Minimum	IN	5.440 {0.2142}		
			EX	5.435 {0.2140}		
Valve stem to guide clearance	(mm {in})	Standard	IN	0.024—0.069 {0.0009—0.0027}		
			EX	0.029—0.074 {0.0012—0.0029}		
		Maximum	IN	0.10 {0.004}		
			EX	0.10 {0.004}		
Valve length	(mm {in})	Standard	IN	102.99—103.79 {4.055—4.086}		
			EX	104.25—105.05 {4.105—4.135}		
		Minimum	IN	102.99 {4.055}		
			EX	103.79 {4.086}		
Valve guide inner diameter	(mm {in})	Standard	IN	5.509—5.539 {0.2169—0.2180}		
			EX	5.509—5.539 {0.2169—0.2180}		
Valve guide protrusion height	(mm {in})	IN		12.2—12.8 {0.481—0.503}		
		EX		12.2—12.8 {0.481—0.503}		
Valve head margin thickness	(mm {in})	Minimum	IN	1.62 {0.0637}		
			EX	1.82 {0.0716}		
Valve seat						
Valve seat contact width	(mm {in})	Standard	IN	1.2—1.6 {0.048—0.062}		
			EX	1.2—1.6 {0.048—0.062}		
Valve seat angle	(°)		IN	45		
			EX	45		
Valve seat sinking (Valve protrusion height)	(mm {in})	Standard	IN	40.64—42.24 {1.600—1.662}		
			EX	40.50—42.10{1.595—1.657}		
Valve spring						
Out-of-square	(mm {in})	Maximum		1% (2.10 {0.082})		
Pressing force at valve spring height H	(N {kgf, lbf})	H: 27.8 mm {1.094 in}		494.9 {50.47,111.2}		
OCV (Oil control valve)						
Coil resistance [20° C{68°F}]	(ohm)	Standard		–		6.9—7.9 *

Item				Engine		
				L8	LF	L3, L3 (with variable valve timing mechanism)
Camshaft						
Camshaft runout	(mm {in})	Maximum		0.03 {0.0012}		
Cam lobe height	(mm {in})	Standard	IN	40.79 {1.606}	42.12{1.659}	42.12 {1.659}
						42.44{1.671}*
			EX	41.08 {1.618}	41.08{1.618}	41.08 {1.618}
						41.18 {1.622}*
		Minimum	IN	40.692{1.603}	42.022{1.655}	42.022{1.655}
						42.342 {1.667}*
			EX	40.982 {1.614}	40.982{1.614}	40.982 {1.614}
						41.082 {1.618}*
Journal diameter	(mm {in})	Standard		24.96—24.98 {0.9827—0.9834}		
		Minimum		24.95 {0.982}		
Journal oil clearance	(mm {in})	Standard		0.04—0.08 {0.002—0.003}		
		Maximum		0.09 {0.0035}		
End play	(mm {in})	Standard		0.09—0.24 {0.0035—0.0094}		
		Maximum		0.25 {0.009}		
Tappet						
Tappet bore diameter	(mm {in})	Standard		31.000—31.030 {1.2205—1.2216}		
Tappet diameter	(mm {in})	Standard		30.970—30.980 {1.2193—1.2196}		
Tappet-to-Tappet bore oil clearance	(mm {in})	Standard		0.02—0.06{0.0008—0.0023}		
		Maximum		0.15 {0.006}		
Cylinder block						
Cylinder head gasket contact surfaces distortion	(mm {in})	Maximum		0.10 {0.004}		
Cylinder bore diameter [Measure the cylinder bore at 42 mm {1.65 in} below the top surface]	(mm {in})	Standard		83.000—83.030 {3.2677—3.2689}	87.500—87.530 {3.4449—3.4460}	
Minimum / maximum bore diameter Limit			(mm {in})	82.940—83.090 {3.2653—3.2712}	87.440—87.590 {3.4425—3.4484}	
Piston						
Piston diameter	(mm {in})	Standard		82.965—82.995 {3.2664—3.2675}	87.465—87.495 {3.4435—3.4446}	
Piston-to-cylinder clearance	(mm {in})	Standard		0.025—0.045 {0.0010—0.0017}		
		Maximum		0.11 {0.0043}		
Piston ring						
Piston ring-to-ring groove clearance	(mm {in})	Standard	Top	0.03—0.08 {0.0012—0.0031}		
			Second	0.03—0.07 {0.0012—0.0027}		
			Oil (rail)	0.03—0.07 {0.0012—0.0027}		
		Maximum	Top	0.17 {0.0067}		
			Second	0.15 {0.0059}		
			Oil (rail)	0.15 {0.0059}		
End gap (measured in cylinder)	(mm {in})	Standard	Top	0.16—0.31 {0.0063—0.0122}		
			Second	0.33—0.48 {0.0130—0.0189}		
			Oil (rail)	0.20—0.70 {0.0079—0.0275}		
		Maximum	Top	1.0 {0.0393}		
			Second	1.0 {0.0393}		
			Oil (rail)	1.0 {0.0393}		

Item			Engine		
			L8	LF	L3, L3 (with variable valve timing mechanism)
Connecting rod and connecting rod bearing					
Connecting rod side clearance	(mm {in})	Standard	0.14—0.36 {0.0056—0.0141}		
		Maximum	0.435 {0.0172}		
Connecting rod bearing size	(mm {in})	Standard	1.496—1.502 {0.0589—0.0591}		
		0.25 {0.01} Oversize	1.623—1.629 {0.0639—0.0641}		
		0.50 {0.02} Oversize	1.748—1.754 {0.0688—0.0690}		
Connecting rod bearing oil clearance	(mm {in})	Standard	0.026—0.052{0.0011—0.0020}		
		Maximum	0.10{0.0039}		
Crankshaft					
Crankshaft runout	(mm {in})	Maximum	0.05 {0.0019}		
Main journal diameter	(mm {in})	Standard	51.980—52.000 {2.0464—2.0472}		
		0.25 {0.01} undersize	51.730—51.750 {2.0366—2.0373}		
Main journal oil clearance	(mm {in})	Standard	0.019—0.035{0.0007—0.0013}		
		Maximum	0.10 {0.0039}		
Main journal out of round	(mm {in})	Maximum	0.05 {0.0019}		
Main bearing size	(mm {in})	Standard	2.506—2.509 {0.0987—0.0988}		
		0.25 {0.01} Oversize	2.628—2.634 {0.1034—0.1037}		
		0.50 {0.02} Oversize	2.753—2.759 {0.1084—0.1086}		
Crank pin journal diameter	(mm {in})	Standard	49.980—50.000 {1.9677—1.9685}		
		0.25 {0.01} undersize	49.730—49.750 {1.9579—1.9586}		
Crank pin out of round	(mm {in})	Maximum	0.05 {0.022}		
Crankshaft end play	(mm {in})	Standard	0.22—0.45{0.0087—0.0177}		
		Maximum	0.55 {0.0216}		
Front oil seal					
Pushing distance of the front oil seal [from the edge of the engine front cover]	(mm {in})		0—0.5 {0—0.019}		
Bolt					
Cylinder head bolt length		Standard	149.0—150.0 {5.86—5.90}		
		Maximum	150.5 {5.92}		
Connecting rod bolt length		Standard	44.7—45.3 {1.75—1.78}		
		Maximum	46.0 {1.81}		
Main bearing cap bolt length		Standard	110.0—110.6 {4.33—4.35}		
		Maximum	111.3 {4.38}		
Balance shaft					
Gear backlash	(mm {in})	Maximum	–		0.005-0.101 {0.00019—0.0039}

*: With variable valve timing mechanism

SPECIAL TOOLS

SPECIAL TOOLS ST-2
ENGINE SST ST-2

SPECIAL TOOLS

ENGINE SST

A6E941001001E01

Ford SST numbers are collated with Mazda SST numbers in the example below.
Ford SSTs are marked with Ford SST number.

Example

1:49 JE01 061 2:303-507 Peg 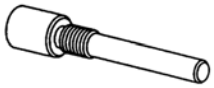

1: Mazda SST number
2: Ford SST number

1:49 JE01 061 2:303–507 Peg 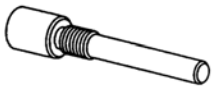	1:49 UN20 5072 2:205–072 Holder 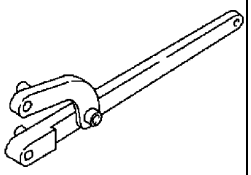	1:49 UN20 507202 2:205–072–02 Adapter 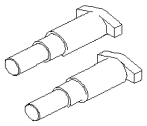
1:49 G032 354 2: – Adjusting wrench 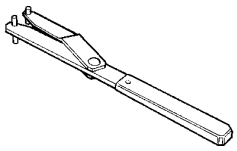	1:49 E011 1A0 2: – Ring gear brake set 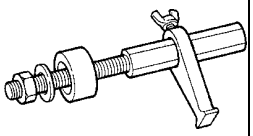	1:49 0636 100B 2: – Valve spring lifter arm 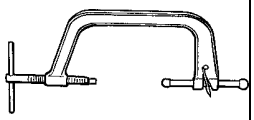
1:49 B012 0A2 2: – Pivot 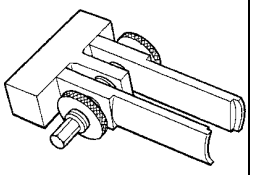	1:49 B012 015 2: – Valve guide installer 	1:49 H010 401 2: – Oil seal installer 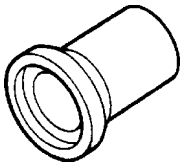
1:49 0107 680A 2: – Engine stand 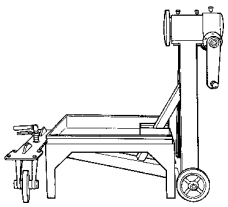	1:49 L010 1A0 2: – Engine hanger set 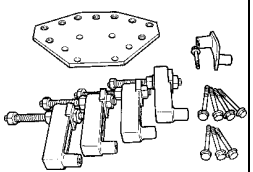	1:49 S120 170 2: – Valve seal remover 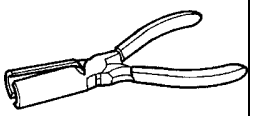
1:49 L012 0A0B 2: – Valve seal and valve guide installer set 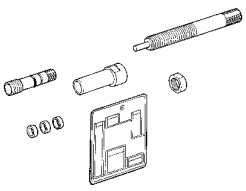	1:49 T032 302 2: – Bearing installer 	1:49 D032 316 2: – Protractor 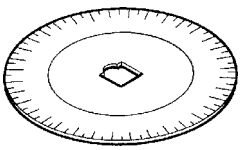

1:49 JE01 054 (Europe) 49 UN30 3376 (Except Europe) 2: 303–376 Plate 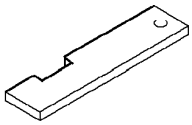	1:49 G011 201 2: – Attachment 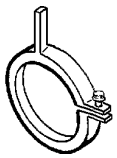	–

Engine Workshop Manual MZR–CD (RF Turbo)

FOREWORD

This manual explains the disassembly, inspection, repair, and reassembly procedures for the above-indicated engine. In order to do these procedures safely, quickly, and correctly, you must first read this manual and any other relevant service materials carefully.

The information in this manual is current up to April, 2002. Any changes that occur after that time will not be reflected in this particular manual. Therefore, the contents of this manual may not exactly match the mechanism that you are currently servicing.

Mazda Motor Corporation
HIROSHIMA, JAPAN

CONTENTS

Title	Section
General Information	GI
Engine	B
Technical Data	TD
Special Tools	ST

© 2002 Mazda Motor Corporation
PRINTED IN THE NETHERLANDS, APRIL 2002
1744–1E–02D

WARNING

Servicing a vehicle can be dangerous. If you have not received service-related training, the risks of injury, property damage, and failure of servicing increase. The recommended servicing procedures for the vehicle in this workshop manual were developed with Mazda-trained technicians in mind. This manual may be useful to non-Mazda trained technicians, but a technician with our service-related training and experience will be at less risk when performing service operations. However, all users of this manual are expected to at least know general safety procedures.

This manual contains "Warnings" and "Cautions" applicable to risks not normally encountered in a general technician's experience. They should be followed to reduce the risk of injury and the risk that improper service or repair may damage the vehicle or render it unsafe. It is also important to understand that the "Warnings" and "Cautions" are not exhaustive. It is impossible to warn of all the hazardous consequences that might result from failure to follow the procedures.

The procedures recommended and described in this manual are effective methods of performing service and repair. Some require tools specifically designed for a specific purpose. Persons using procedures and tools which are not recommended by Mazda Motor Corporation must satisfy themselves thoroughly that neither personal safety nor safety of the vehicle will be jeopardized.

The contents of this manual, including drawings and specifications, are the latest available at the time of printing, and Mazda Motor Corporation reserves the right to change the vehicle designs and alter the contents of this manual without notice and without incurring obligation.

Parts should be replaced with genuine Mazda replacement parts or with parts which match the quality of genuine Mazda replacement parts. Persons using replacement parts of lesser quality than that of genuine Mazda replacement parts must satisfy themselves thoroughly that neither personal safety nor safety of the vehicle will be jeopardized.

Mazda Motor Corporation is not responsible for any problems which may arise from the use of this manual. The cause of such problems includes but is not limited to insufficient service-related training, use of improper tools, use of replacement parts of lesser quality than that of genuine Mazda replacement parts, or not being aware of any revision of this manual.

GENERAL INFORMATION

HOW TO USE THIS MANUAL GI-2
RANGE OF TOPICS GI-2
SERVICE PROCEDURE GI-2
SYMBOLS GI-3
ADVISORY MESSAGES GI-4
UNITS GI-5
UNITS GI-5
FUNDAMENTAL PROCEDURES GI-6
PREPARATION OF TOOLS AND MEASURING EQUIPMENT GI-6
SPECIAL SERVICE TOOLS GI-6
DISASSEMBLY GI-6
INSPECTION DURING REMOVAL, DISASSEMBLY GI-7
ARRANGEMENT OF PARTS GI-7
CLEANING OF PARTS GI-7
REASSEMBLY GI-7
ADJUSTMENT GI-8
RUBBER PARTS AND TUBING GI-8
HOSE CLAMPS GI-8
TORQUE FORMULAS GI-9
VISE GI-9
ELECTRICAL SYSTEM GI-10
ELECTRICAL PARTS GI-10
CONNECTORS GI-10
NEW STANDARDS GI-13
NEW STANDARDS GI-13
ABBREVIATIONS GI-15
ABBREVIATIONS GI-15

HOW TO USE THIS MANUAL

RANGE OF TOPICS

AME201000001101

- This manual contains procedures for performing all required service operations. The procedures are divided into the following five basic operations:
  — Removal/Installation
  — Disassembly/Assembly
  — Replacement
  — Inspection
  — Adjustment
- Simple operations which can be performed easily just by looking at the vehicle (i.e., removal/installation of parts, jacking, vehicle lifting, cleaning of parts and visual inspection) have been omitted.

SERVICE PROCEDURE

AME201000001102

Inspection, adjustment

- Inspection and adjustment procedures are divided into steps. Important points regarding the location and contents of the procedures are explained in detail and shown in the illustrations.

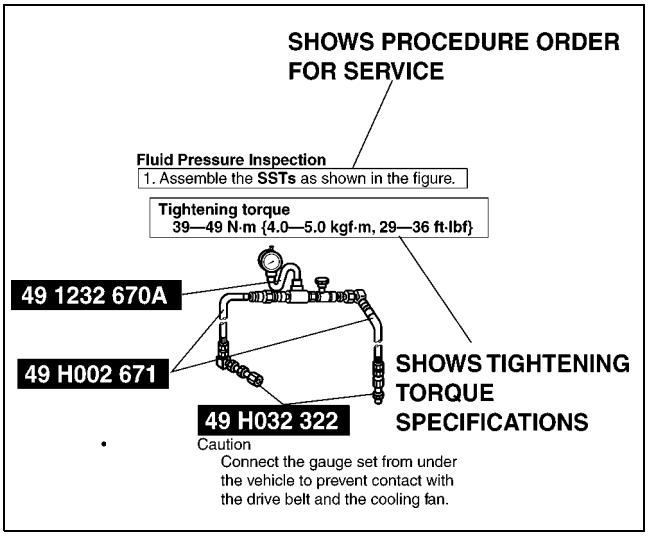

XME2010001

Repair procedure

1. Most repair operations begin with an overview illustration. It identifies the components, shows how the parts fit together and describes visual part inspection. However, only removal/installation procedures that need to be performed methodically have written instructions.
2. Expendable parts, tightening torques and symbols for oil, grease, and sealant are shown in the overview illustration. In addition, symbols indicating parts requiring the use of special service tools or equivalent are also shown.

3. Procedure steps are numbered and the part that is the main point of that procedure is shown in the illustration with the corresponding number. Occasionally, there are important points or additional information concerning a procedure. Refer to this information when servicing the related part.

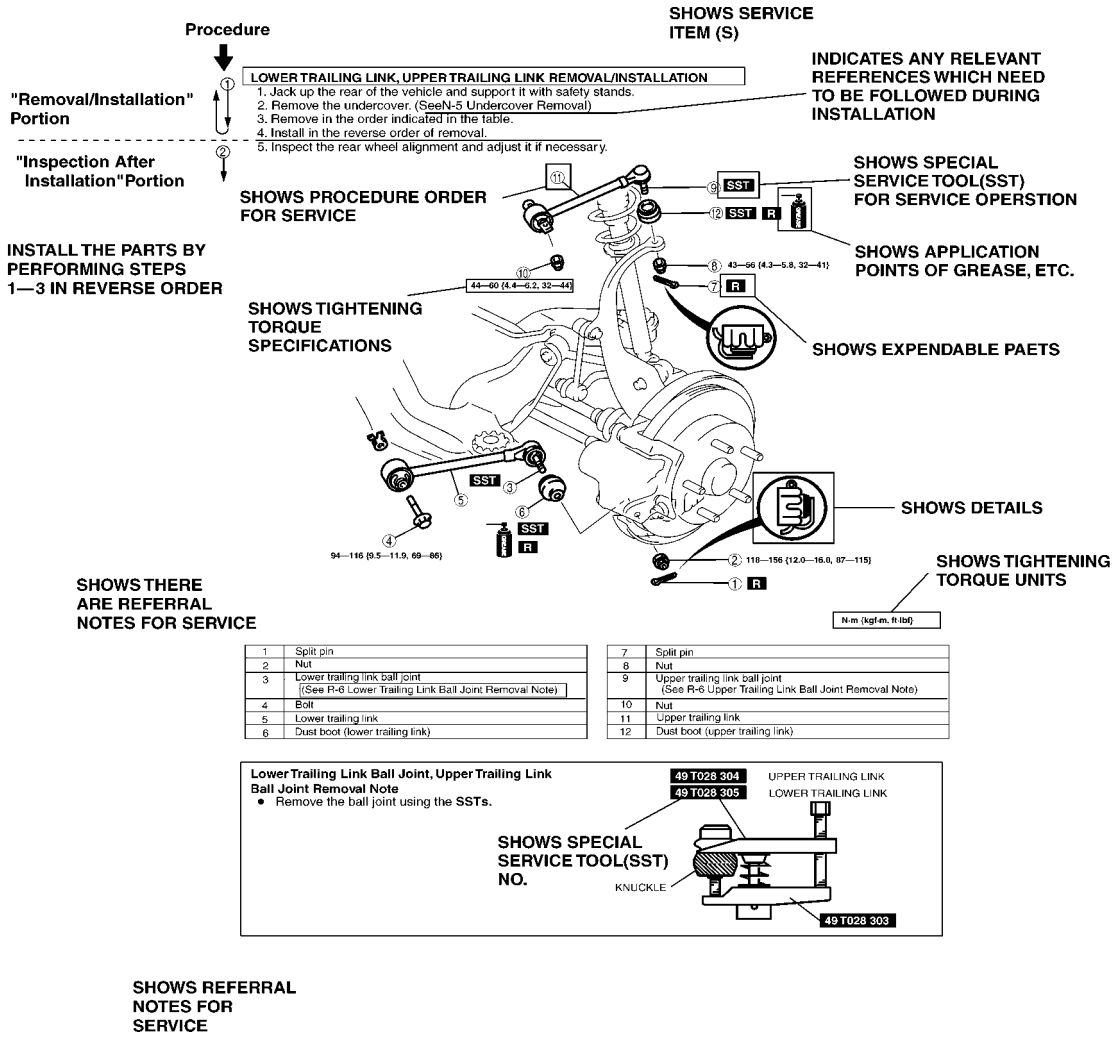

XME2010010

SYMBOLS

AME201000001103

- There are eight symbols indicating oil, grease, fluids, sealant, and **SST** or equivalent use. These symbols show application points or use of these materials during service.

Symbol	Meaning	Kind
	Apply oil	New appropriate engine oil or gear oil
	Apply brake fluid	New appropriate brake fluid

Symbol	Meaning	Kind
	Apply automatic transaxle/ transmission fluid	New appropriate automatic transaxle/ transmission fluid
	Apply grease	Appropriate grease
	Apply sealant	Appropriate sealant
	Apply petroleum jelly	Appropriate petroleum jelly
	Replace part	O-ring, gasket, etc.
	Use **SST** or equivalent	Appropriate tools

ADVISORY MESSAGES

AME201000001104

- You'll find several **Warnings**, **Cautions**, **Notes**, **Specifications** and **Upper and Lower Limits** in this manual.

Warning

- A Warning indicates a situation in which serious injury or death could result if the warning is ignored.

Caution

- A Caution indicates a situation in which damage to the vehicle or parts could result if the caution is ignored.

Note

- A Note provides added information that will help you to complete a particular procedure.

Specification

- The values indicate the allowable range when performing inspections or adjustments.

Upper and lower limits

- The values indicate the upper and lower limits that must not be exceeded when performing inspections or adjustments.

UNITS

UNITS

AME201200002101

Electrical current	A (ampere)
Electric power	W (watt)
Electric resistance	ohm
Electric voltage	V (volt)
Length	mm (millimeter)
	in (inch)
Negative pressure	kPa (kilo pascal)
	mmHg (millimeters of mercury)
	inHg (inches of mercury)
Positive pressure	kPa (kilo pascal)
	kgf/cm^2 (kilogram force per square centimeter)
	psi (pounds per square inch)
Torque	N·m (Newton meter)
	kgf·m (kilogram force meter)
	kgf·cm (kilogram force centimeter)
	ft·lbf (foot pound force)
	in·lbf (inch pound force)
Volume	L (liter)
	US qt (U.S. quart)
	Imp qt (Imperial quart)
	ml (milliliter)
	cc (cubic centimeter)
	cu in (cubic inch)
	fl oz (fluid ounce)
Weight	g (gram)
	oz (ounce)

Conversion to SI Units (Système International d'Unités)

- All numerical values in this manual are based on SI units. Numbers shown in conventional units are converted from these values.

Rounding Off

- Converted values are rounded off to the same number of places as the SI unit value. For example, if the SI unit value is 17.2 and the value after conversion is 37.84, the converted value will be rounded off to 37.8.

Upper and Lower Limits

- When the data indicates upper and lower limits, the converted values are rounded down if the SI unit value is an upper limit and rounded up if the SI unit value is a lower limit. Therefore, converted values for the same SI unit value may differ after conversion. For example, consider 2.7 kgf/cm^2 in the following specifications:

  210—260 kPa {2.1—2.7 kgf/cm^2, 30—38 psi}
  270—310 kPa {2.7—3.2 kgf/cm^2, 39—45 psi}

- The actual converted values for 2.7 kgf/cm^2 are 264 kPa and 38.4 psi. In the first specification, 2.7 is used as an upper limit, so the converted values are rounded down to 260 and 38. In the second specification, 2.7 is used as a lower limit, so the converted values are rounded up to 270 and 39.

FUNDAMENTAL PROCEDURES

PREPARATION OF TOOLS AND MEASURING EQUIPMENT

- Be sure that all necessary tools and measuring equipment are available before starting any work.

AME201400004101

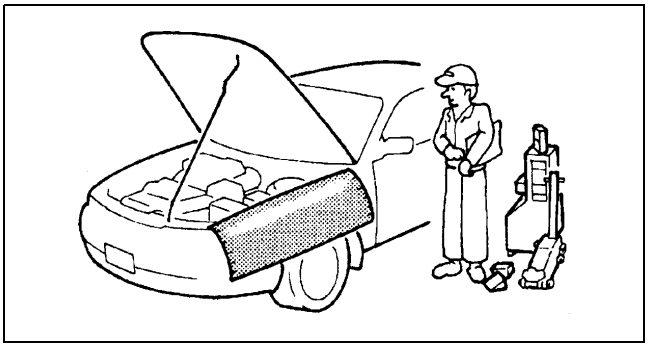

X3U000WAH

SPECIAL SERVICE TOOLS

- Use special service tools or equivalent when they are required.

AME201400004102

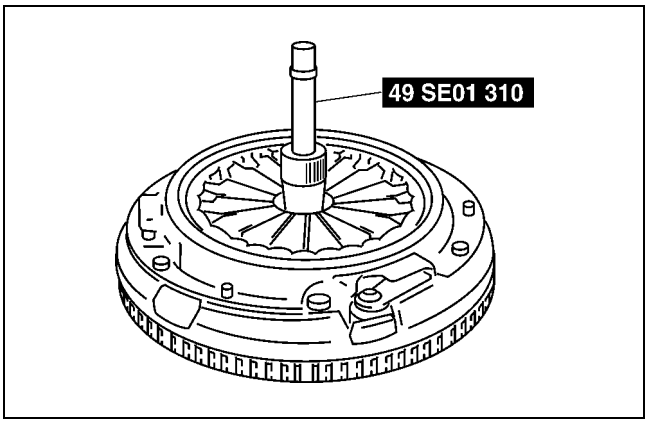

X3U000WAJ

DISASSEMBLY

- If the disassembly procedure is complex, requiring many parts to be disassembled, all parts should be marked in a place that will not affect their performance or external appearance and identified so that reassembly can be performed easily and efficiently.

AME201400004103

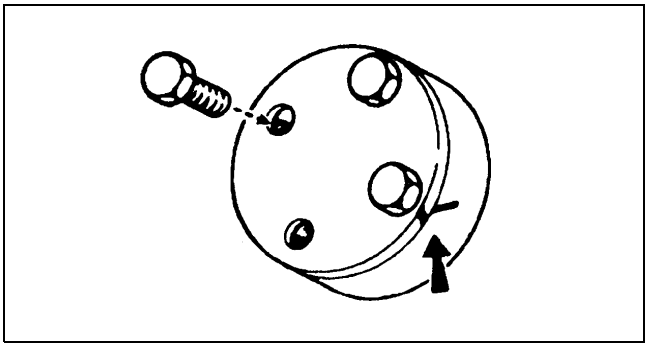

X3U000WAL

INSPECTION DURING REMOVAL, DISASSEMBLY

- When removed, each part should be carefully inspected for malfunction, deformation, damage, and other problems.

AME201400004104

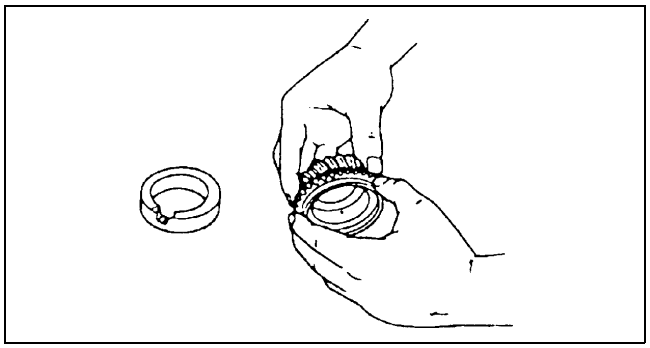

X3U000WAM

ARRANGEMENT OF PARTS

- All disassembled parts should be carefully arranged for reassembly.
- Be sure to separate or otherwise identify the parts to be replaced from those that will be reused.

AME201400004105

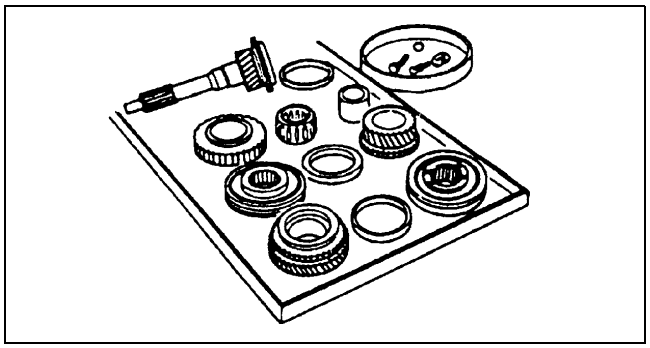

X3U000WAN

CLEANING OF PARTS

- All parts to be reused should be carefully and thoroughly cleaned in the appropriate method.

  Warning
  - **Using compressed air can cause dirt and other particles to fly out causing injury to the eyes. Wear protective eye wear whenever using compressed air.**

AME201400004106

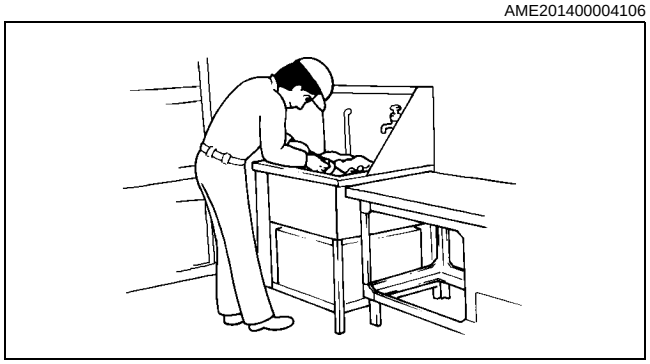

WGIWXX0030J

REASSEMBLY

- Standard values, such as torques and certain adjustments, must be strictly observed in the reassembly of all parts.
- If removed, these parts should be replaced with new ones:
  — Oil seals
  — Gaskets
  — O-rings
  — Lockwashers
  — Cotter pins
  — Nylon nuts

AME201400004107

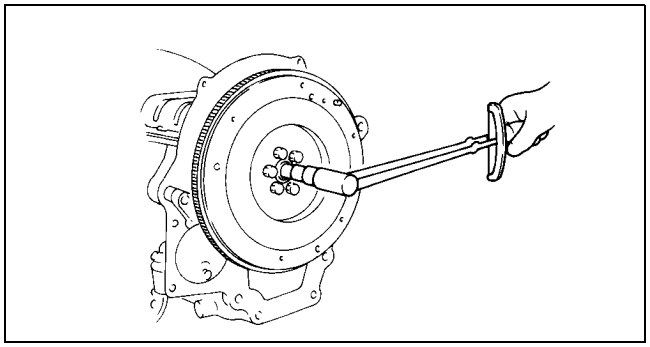

WGIWXX0031J

- Depending on location:
  — Sealant and gaskets, or both, should be applied to specified locations. When sealant is applied, parts should be installed before sealant hardens to prevent leakage.
  — Oil should be applied to the moving components of parts.
  — Specified oil or grease should be applied at the prescribed locations (such as oil seals) before reassembly.

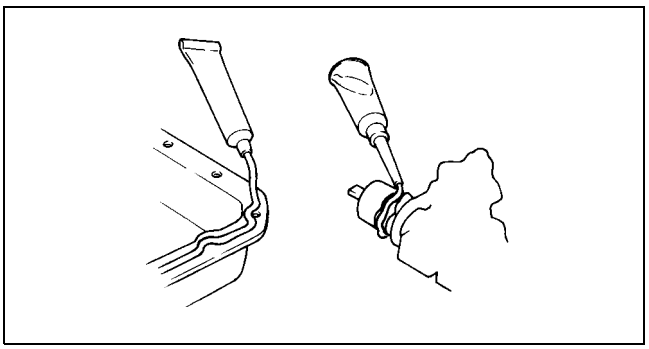

WGIWXX0032J

ADJUSTMENT

- Use suitable gauges and/or testers when making adjustments.

AME201400004108

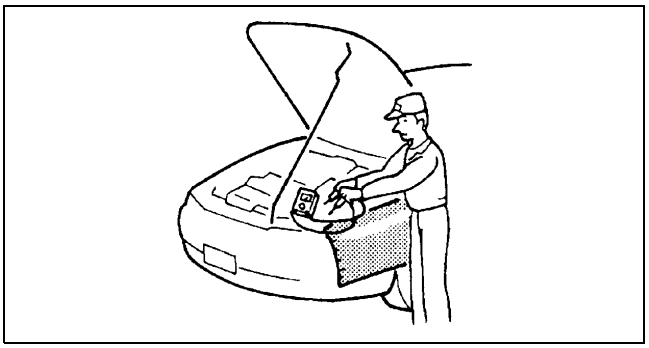

X3U000WAS

RUBBER PARTS AND TUBING

- Prevent gasoline or oil from getting on rubber parts or tubing.

AME201400004109

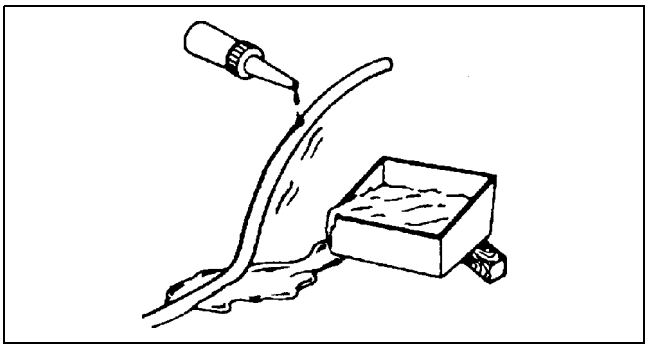

WGIWXX0034E

HOSE CLAMPS

- When reinstalling, position the hose clamp in the original location on the hose and squeeze the clamp lightly with large pliers to ensure a good fit.

AME201400004110

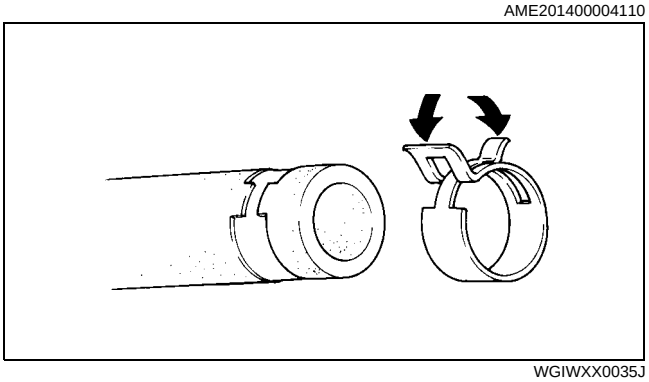

WGIWXX0035J

TORQUE FORMULAS

- When using a torque wrench-**SST** or equivalent combination, the written torque must be recalculated due to the extra length that the **SST** or equivalent adds to the torque wrench. Recalculate the torque using the following formulas. Choose the formula that applies to you.

Torque Unit	Formula
N·m	N·m × [L/(L+A)]
kgf·m	kgf·m × [L/(L+A)]
kgf·cm	kgf·cm × [L/(L+A)]
ft·lbf	ft·lbf × [L/(L+A)]
in·lbf	in·lbf × [L/(L+A)]

A : The length of the **SST** past the torque wrench drive
L : The length of the torque wrench

AME201400004111

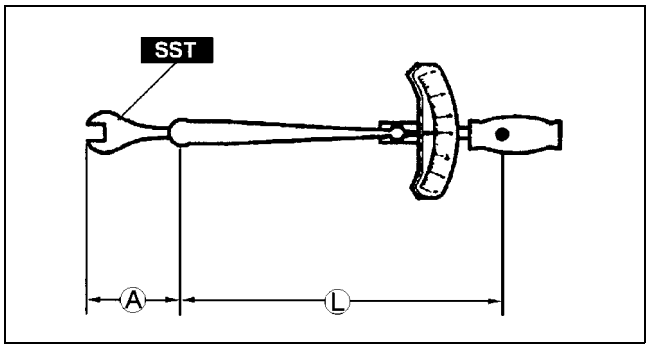

WGIWXX0036E

VISE

- When using a vise, put protective plates in the jaws of the vise to prevent damage to parts.

AME201400004112

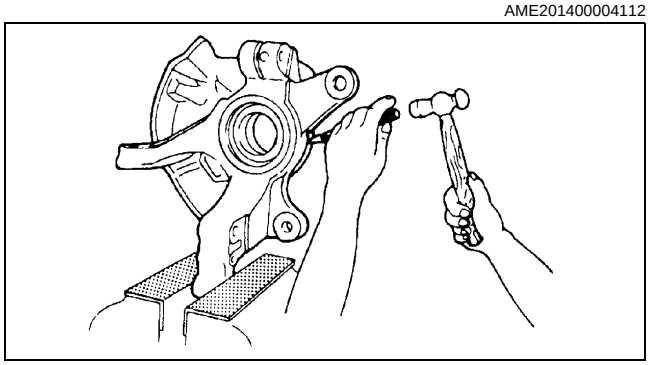

X3U000WAW

ELECTRICAL SYSTEM

ELECTRICAL PARTS

AME201700006101

Battery cable

- Before disconnecting connectors or removing electrical parts, disconnect the negative battery cable.

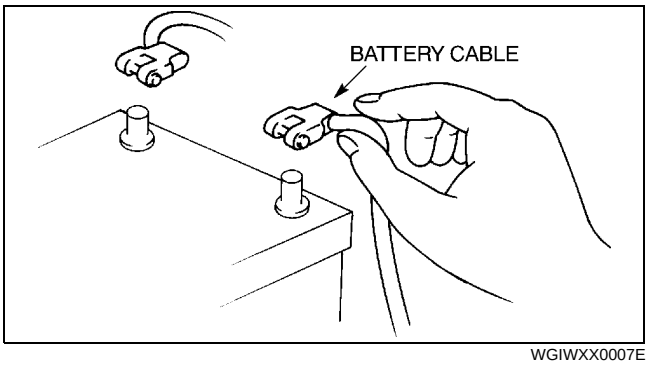

WGIWXX0007E

Wiring Harness

- To remove the wiring harness from the clip in the engine room, pry up the hook of the clip using a flathead screwdriver.

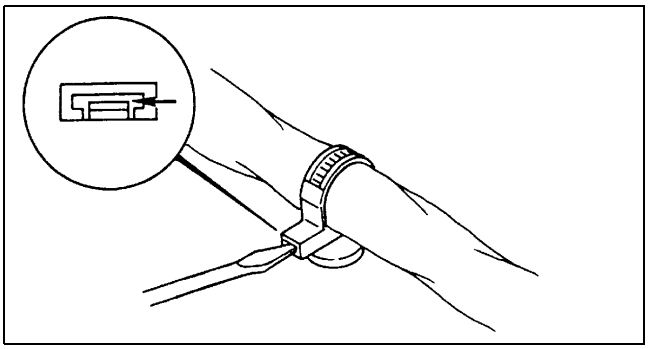

X3U000WBU

CONNECTORS

AME201700006102

Data link connector

- Insert the probe into the terminal when connecting a jumper wire to the data link connector.

Caution

- **Inserting a jumper wire probe into the data link connector terminal may damage the terminal.**

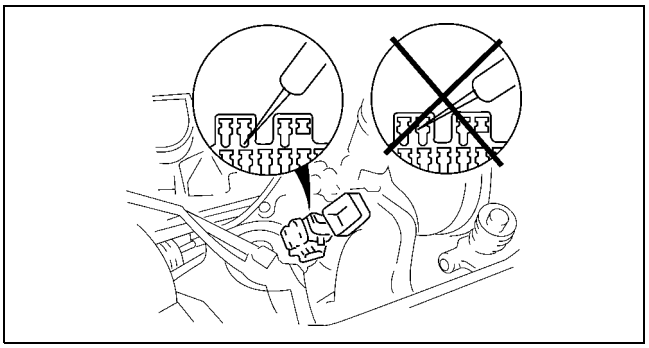

X3U000WAY

Disconnecting connectors

- When disconnecting connector, grasp the connectors, not the wires.

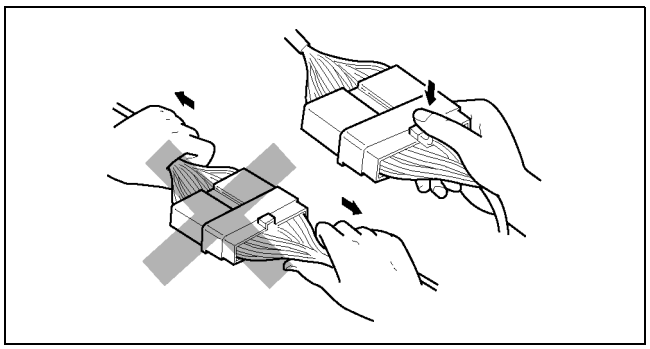

WGIWXX0041E

- Connectors can be disconnected by pressing or pulling the lock lever as shown.

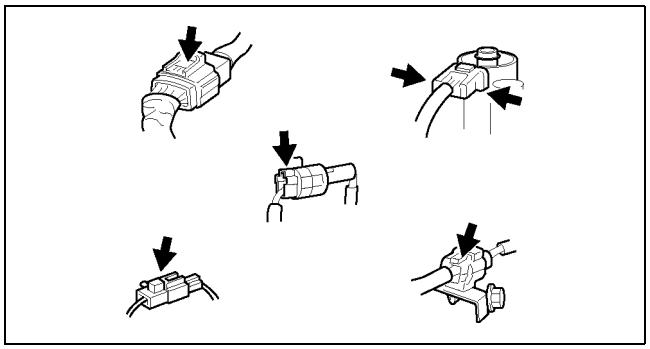

WGIWXX0042E

Locking connector

- When locking connectors, listen for a click indicating they are securely locked.

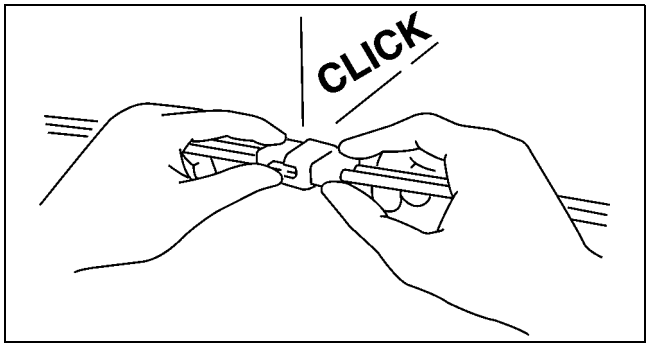

X3U000WB1

Inspection

- When a tester is used to inspect for continuity or measuring voltage, insert the tester probe from the wiring harness side.

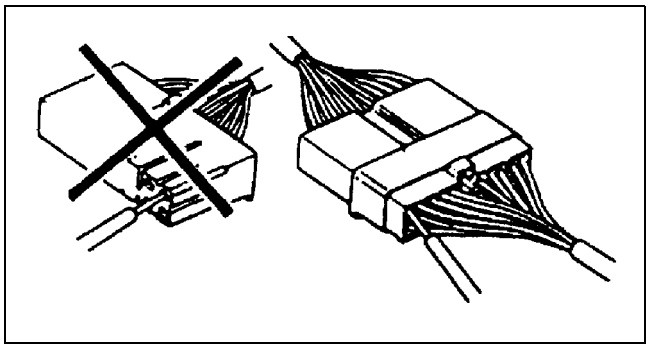

X3U000WB2

- Inspect the terminals of waterproof connectors from the connector side since they cannot be accessed from the wiring harness side.

Caution
- **To prevent damage to the terminal, wrap a thin wire around the tester probe before inserting into terminal.**

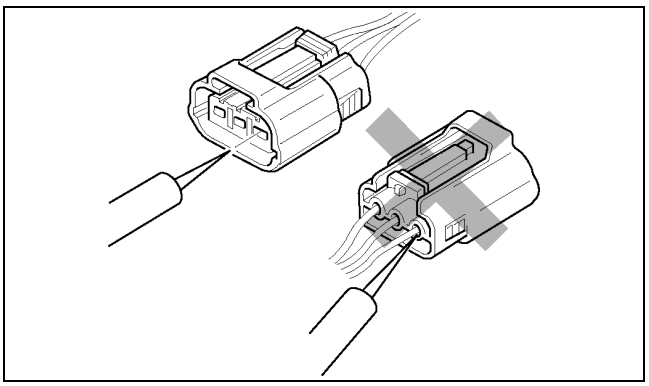

WGIWXX0045E

Terminals
Inspection

- Pull lightly on individual wires to verify that they are secured in the terminal.

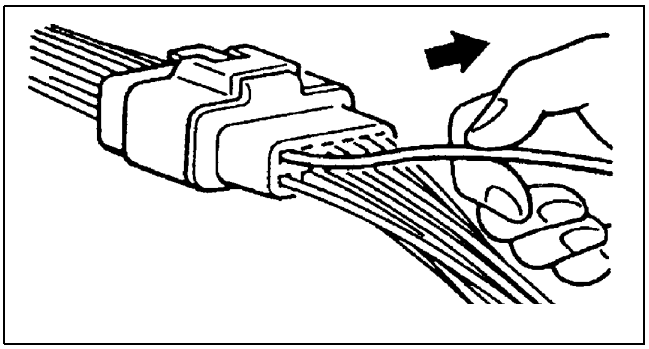

X3U000WB4

Wiring Harness
Wiring color codes

- Two-color wires are indicated by a two-color code symbol.
- The first letter indicates the base color of the wire and the second the color of the stripe.

CODE	COLOR	CODE	COLOR
B	Black	O	Orange
BR	Brown	P	Pink
G	Green	R	Red
GY	Gray	V	Violet
L	Blue	W	White
LB	Light Blue	Y	Yellow
LG	Light Green		

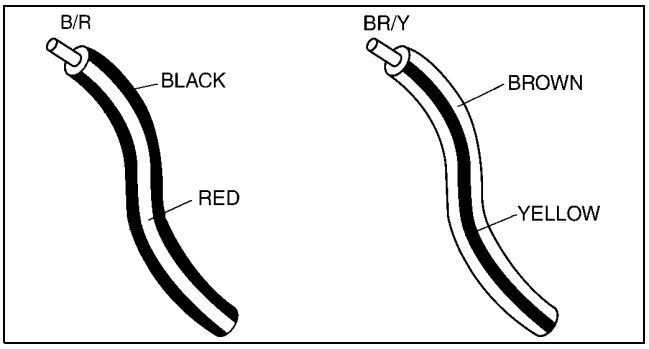

X3U000WB7

NEW STANDARDS

NEW STANDARDS

AME202800020101

- Following is a comparison of the previous standard and the new standard.

New Standard		Previous Standard		Remark
Abbreviation	Name	Abbreviation	Name	
AP	Accelerator Pedal	—	Accelerator Pedal	
ACL	Air Cleaner	—	Air Cleaner	
A/C	Air Conditioning	—	Air Conditioning	
BARO	Barometric Pressure	—	Atmospheric Pressure	
B+	Battery Positive Voltage	Vb	Battery Voltage	
—	Brake Switch	—	Stoplight Switch	
—	Calibration Resistor	—	Corrected Resistance	#6
CMP sensor	Camshaft Position Sensor	—	Crank Angle Sensor	
CAC	Charge Air Cooler	—	Intercooler	
CLS	Closed Loop System	—	Feedback System	
CTP	Closed Throttle Position	—	Fully Closed	
CPP	Clutch Pedal Position	—	Idle Switch	
CIS	Continuous Fuel Injection System	—	Clutch Position	
CS sensor	Control Sleeve Sensor	CSP sensor	Control Sleeve Position Sensor	#6
CKP sensor	Crankshaft Position Sensor	—	Crank Angle Sensor 2	
DLC	Data Link Connector	—	Diagnosis Connector	
DTM	Diagnostic Test Mode	—	Test Mode	#1
DTC	Diagnostic Trouble Code(s)	—	Service Code(s)	
DI	Distributor Ignition	—	Spark Ignition	
DLI	Distributorless Ignition	—	Direct Ignition	
EI	Electronic Ignition	—	Electronic Spark Ignition	#2
ECT	Engine Coolant Temperature	—	Water Thermo	
EM	Engine Modification	—	Engine Modification	
—	Engine Speed Input Signal	—	Engine RPM Signal	
EVAP	Evaporative Emission	—	Evaporative Emission	
EGR	Exhaust Gas Recirculation	—	Exhaust Gas Recirculation	
FC	Fan Control	—	Fan Control	
FF	Flexible Fuel	—	Flexible Fuel	
4GR	Fourth Gear	—	Overdrive	
—	Fuel Pump Relay	—	Circuit Opening Relay	#3
FSO solenoid	Fuel Shut Off Solenoid	FCV	Fuel Cut Valve	#6
GEN	Generator	—	Alternator	
GND	Ground	—	Ground/Earth	
HO2S	Heated Oxygen Sensor	—	Oxygen Sensor	With heater
IAC	Idle Air control	—	Idle Speed Control	
—	IDM Relay	—	Spill Valve Relay	#6
—	Incorrect Gear Ratio	—	—	
—	Injection Pump	FIP	Fuel Injection Pump	#6
—	Input/Turbine Speed Sensor	—	Pulse Generator	
IAT	Intake Air Temperature	—	Intake Air Thermo	
KS	Knock Sensor	—	Knock Sensor	
MIL	Malfunction Indicator Lamp	—	Malfunction Indicator Light	
MAP	Manifold Absolute Pressure	—	Intake Air Pressure	
MAF sensor	Mass Air Flow Sensor	—	Airflow Sensor	
MFL	Multiport Fuel Injection	—	Multiport Fuel Injection	
OBD	On-Board Diagnostic	—	Diagnosis/SelfDiagnosis	
OL	Open Loop	—	Open Loop	

New Standard		Previous Standard		Remark
Abbrevi-ation	Name	Abbrevi-ation	Name	
—	Output Speed Sensor	—	Vehicle Speed Sensor 1	
OC	Oxidation Catalytic Converter	—	Catalytic Converter	
O2S	Oxygen Sensor	—	Oxygen Sensor	
PNP	Park/Neutral Position	—	Park/Neutral Range	
—	PCM Control Relay	—	Main Relay	#6
PSP	Power Steering Pressure	—	Power Steering Pressure	
PCM	Powertrain Control Module	ECU	Engine Control Unit	#4
—	Pressure Control Solenoid	—	Line Pressure Solenoid Valve	
PAIR	Pulsed Secondary Air Injection	—	Secondary Air Injection System	Pulsed injection
—	Pump Speed Sensor	—	NE Sensor	#6
AIR	Secondary Air Injection	—	Secondary Air Injection System	Injection with air pump
SAPV	Secondary Air Pulse Valve	—	Reed Valve	
SFI	Sequential Multipoint Fuel Injection	—	Sequential Fuel Injection	
—	Shift Solenoid A	—	1–2 Shift Solenoid Valve	
		—	Shift A Solenoid Valve	
—	Shift Solenoid B	—	2–3 Shift Solenoid Valve	
		—	Shift B Solenoid Valve	
—	Shift Solenoid C	—	3–4 Shift Solenoid Valve	
3GR	Third Gear	—	3rd Gear	
TWC	Three Way Catalytic Converter	—	Catalytic Converter	
TB	Throttle Body	—	Throttle Body	
TP sensor	Throttle Position Sensor	—	Throttle Sensor	
TCV	Timer Control Valve	TCV	Timing Control Valve	#6
TCC	Torque Converter Clutch	—	Lockup Position	
TCM	Transmission (Transaxle) Control Module	—	ECAT Control Unit	
—	Transmission (Transaxle) Fluid Temperature Sensor	—	ATF Thermosensor	
TR	Transmission (Transaxle) Range	—	Inhibitor Position	
TC	Turbocharger	—	Turbocharger	
VSS	Vehicle Speed Sensor	—	Vehicle Speed Sensor	
VR	Voltage Regulator	—	IC Regulator	
VAF sensor	Volume Air Flow Sensor	—	Air flow Sensor	
WUTWC	Warm Up Three Way Catalytic Converter	—	Catalytic Converter	#5
WOT	Wide Open Throttle	—	Fully Open	

#1 : Diagnostic trouble codes depend on the diagnostic test mode
#2 : Controlled by the PCM
#3 : In some models, there is a fuel pump relay that controls pump speed. That relay is now called the fuel pump relay (speed).
#4 : Device that controls engine and powertrain
#5 : Directly connected to exhaust manifold
#6 : Part name of diesel engine

ABBREVIATIONS

ABBREVIATIONS

AME203000011101

BDC	Bottom dead center
EX	Exhaust
IN	Intake
max	Maximum
min	Minimum
SST	Special service tool
TDC	Top dead center

ENGINE

ENGINE B-2
ENGINE OVERHAUL SERVICE WARNING B-2
MOUNTING B-2
ENGINE DISMOUNTING B-3
TIMING BELT DISASSEMBLY B-3
CYLINDER HEAD (I) DISASSEMBLY B-7
CYLINDER HEAD (II) DISASSEMBLY B-8
CYLINDER BLOCK (I) DISASSEMBLY B-10
CYLINDER BLOCK (II) DISASSEMBLY B-13
CYLINDER HEAD INSPECTION B-14
VALVE, VALVE GUIDE INSPECTION B-15
VALVE GUIDE REPLACEMENT B-16
VALVE SEAT INSPECTION/REPAIR B-17
VALVE SPRING INSPECTION B-18
CAMSHAFT INSPECTION B-18
CAMSHAFT OIL CLEARANCE INSPECTION B-19
CAMSHAFT END PLAY INSPECTION B-19
CYLINDER BLOCK INSPECTION/REPAIR B-20
OIL JET VALVE, NOZZLE INSPECTION B-20
PISTON INSPECTION B-21
PISTON CLEARANCE INSPECTION/REPAIR B-21
PISTON RING CLEARANCE INSPECTION B-21
PISTON PIN CLEARANCE INSPECTION B-22
CRANKSHAFT INSPECTION B-22
CRANKSHAFT OIL CLEARANCE INSPECTION/REPAIR B-23
CRANKSHAFT END PLAY INSPECTION/REPAIR B-24
CONNECTING ROD INSPECTION B-24
CONNECTING ROD OIL CLEARANCE INSPECTION/REPAIR B-24
CONNECTING ROD SIDE CLEARANCE INSPECTION B-25
PISTON AND CONNECTING ROD INSPECTION B-25
CYLINDER HEAD BOLT INSPECTION B-25
TIMING BELT AUTO TENSIONER INSPECTION B-26
PILOT BEARING INSPECTION B-26
OIL PUMP INSPECTION B-27
VALVE CLEARANCE INSPECTION B-28
VALVE CLEARANCE ADJUSTMENT B-28
CYLINDER BLOCK (I) ASSEMBLY B-30
CYLINDER BLOCK (II) ASSEMBLY B-32
CYLINDER HEAD (I) ASSEMBLY B-37
CYLINDER HEAD (II) ASSEMBLY B-39
TIMING BELT ASSEMBLY B-43

ENGINE

ENGINE OVERHAUL SERVICE WARNING

AME222402000101

Warning
- **Continuous exposure with USED engine oil has caused skin cancer in laboratory mice. Protect your skin by washing with soap and water immediately after this work.**

MOUNTING

AME222402000102

1. Install the **SST** (arms) to the cylinder block holes as shown, and hand-tighten the **SST** (bolts).

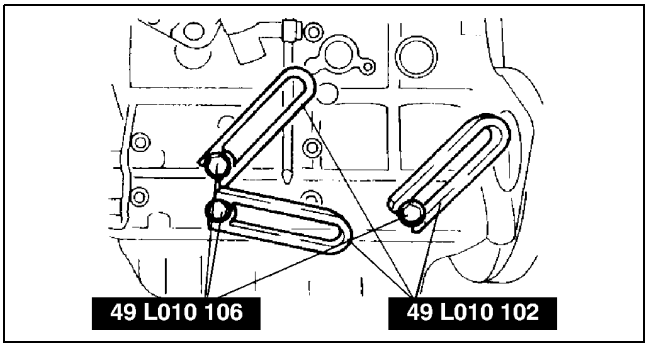

AME2524E001

2. Assemble the **SSTs** (bolts, nuts, and plate) to the specified positions.
3. Install the **SSTs** (bolts, nuts, and plate) assembled in Step 2 to the **SSTs** (arms) installed in Step 1.
4. Adjust the **SSTs** (bolts) so that the thread is exposed less than 20 mm {0.79 in}.
5. Make the **SSTs** (plate and arms) parallel by adjusting the **SSTs** (bolts and nuts).

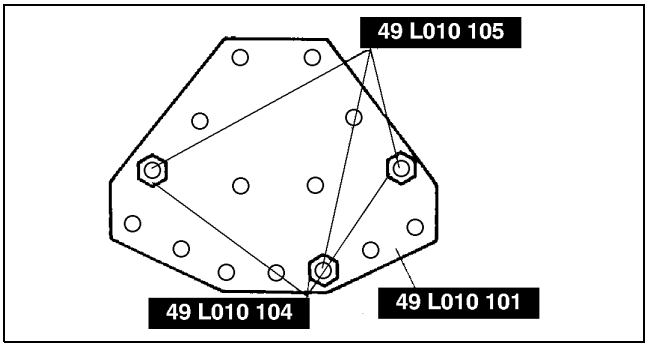

AME2524E002

6. Tighten the **SSTs** (bolts and nuts) to affix the **SST** firmly.

Warning
- **The self-locking brake system of the engine stand may not be effective when the engine is held in an unbalanced position. This could lead to sudden, rapid movement of the engine and mounting stand handle and cause serious injury. Never keep the engine in an unbalanced position, and always hold the rotating handle firmly when turning the engine.**

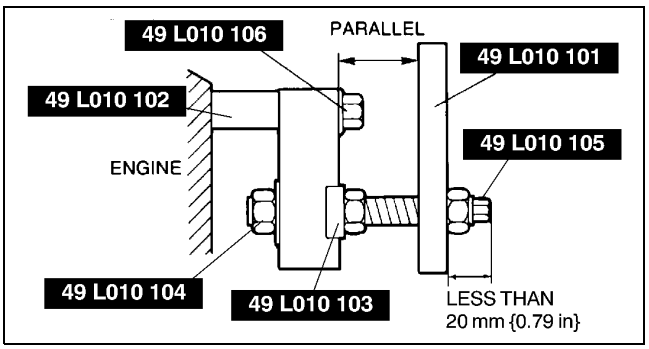

AME2524E003

7. Mount the engine on the **SST** (engine stand).
8. Drain the engine oil into a container.
9. Install the drain plug and a new washer.

Tightening torque
30—41 N·m {3.0—42 kgf·m, 22—30 ft·lbn}

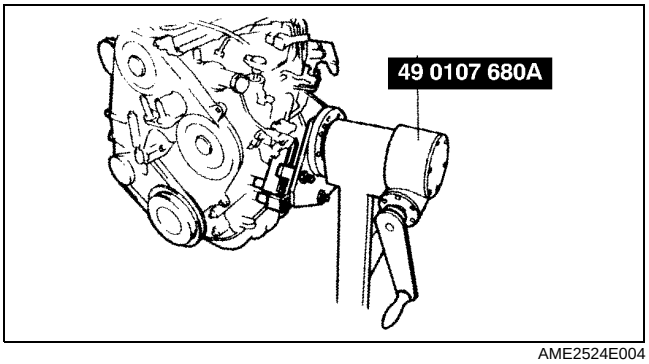

AME2524E004

ENGINE DISMOUNTING

AME222402000103

1. Dismount in the reverse order of mounting.

TIMING BELT DISASSEMBLY

AME222402000112

1. Disassemble in the order indicated in the table.

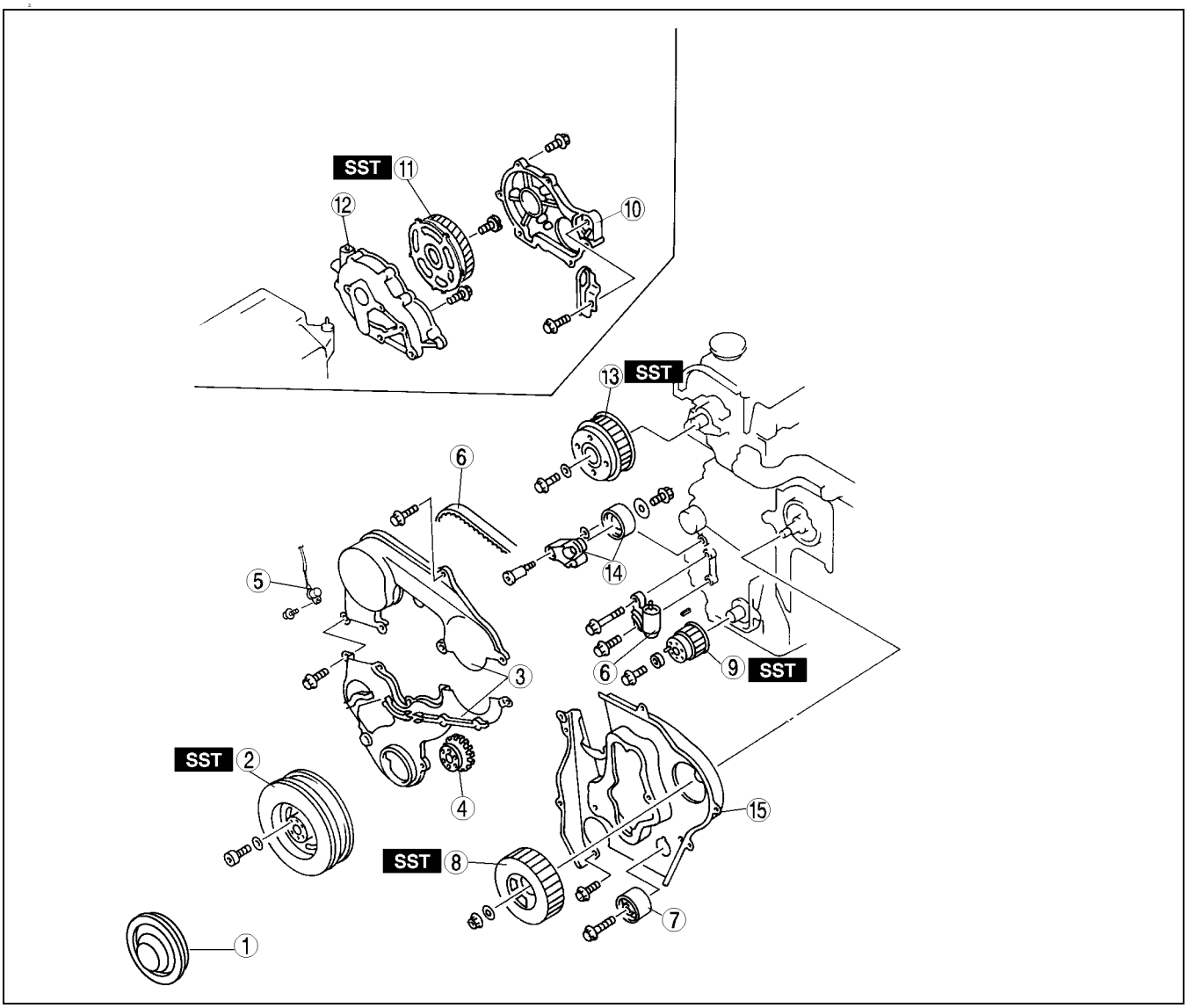

AME2516E001

1	Pulley cover
2	Crankshaft pulley (See B–4 Crankshaft Pulley Disassembly Note)
3	Timing belt cover
4	Guide plate
5	Crankshaft position sensor
6	Timing belt, timing belt auto tensioned (SeeB–4 Timing Belt, Timing Belt Auto Tensioner Disassembly Note)
7	Idler
8	Injection pump pulley (See B–5 Injection Pump Pulley Disassembly Note)

9	Timing belt pulley (See B–5 Timing Belt Pulley Disassembly Note)
10	Gear cover
11	Drive gear (See B–6 Drive Gear Disassembly Note)
12	Gear case
13	Camshaft pulley (See B–6 Camshaft Pulley Disassembly Note)
14	Tensioner
15	Seal plate

Crankshaft Pulley Disassembly Note

1. Hold the crankshaft using the **SST**.
2. Remove the crankshaft pulley lock bolt.

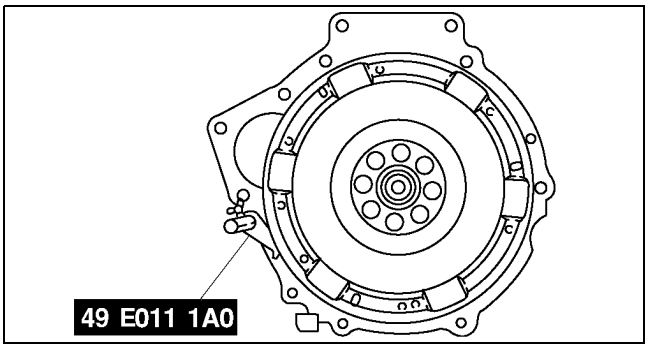

AME2524E066

Timing Belt, Timing Belt Auto Tensioner Disassembly Note

1. Turn the crankshaft clockwise and align the timing marks as shown.

   Caution
   - **The following will damage the belt and shorten its life; forcefully twisting it, turning it inside out, or allowing oil or grease on it.**
   - **After removing the timing belt, do not move the crankshaft or the camshaft pulley or both from this position because it can cause the valve and piston to contact.**

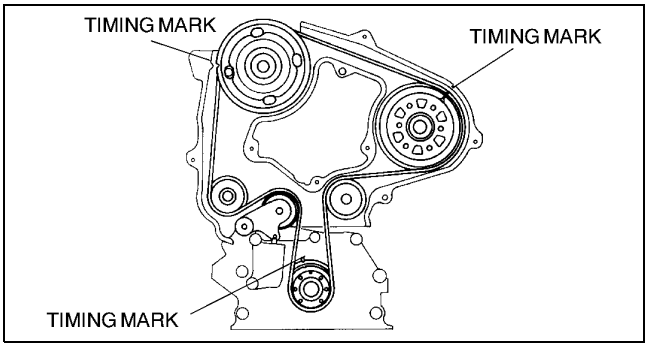

AME2516E002

2. Remove the timing belt auto tensioner.
3. Mark the timing belt rotation on the belt for proper reinstallation.

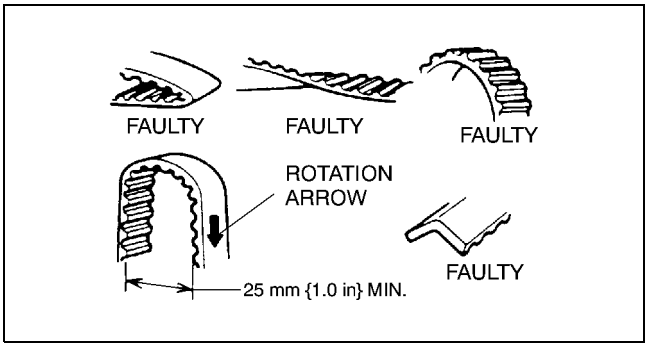

AME2516E003

Injection Pump Pulley Disassembly Note

1. Verify that timing marks are correctly aligned.

Caution

- **To prevent the bolts (M8 × 1.25) from damaging the Injection pump and pulley, do not fully tighten the detent bolt. If it contacts the pulley surface, it will damage the pulley.**

2. Fix the injection pump pulley to the bracket using two injection pump pulley fixing bolts (M8 × 1.25).
3. Loosen the injection pump pulley lock nut.

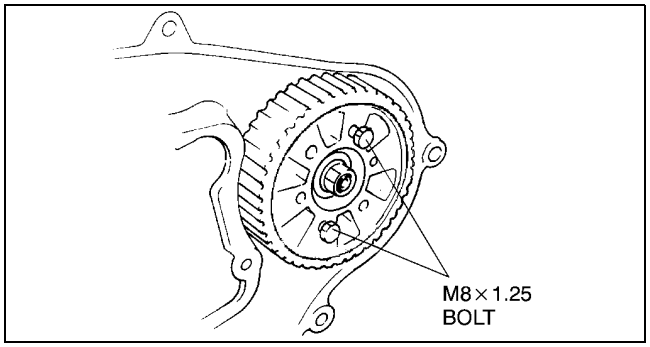

AME2524E005

4. Separate the injection pump pulley from the injection pump shaft using the **SST**.
5. Remove the injection pump pulley fixing bolts (M8 ×1.25).

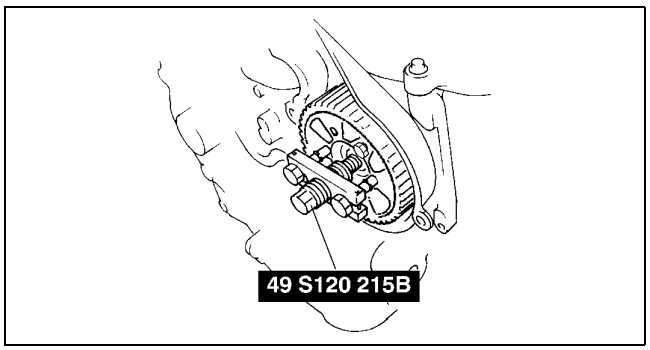

AME2524E006

Timing Belt Pulley Disassembly Note

1. Hold the crankshaft using the **SST**.
2. Remove the timing belt pulley lock bolt.

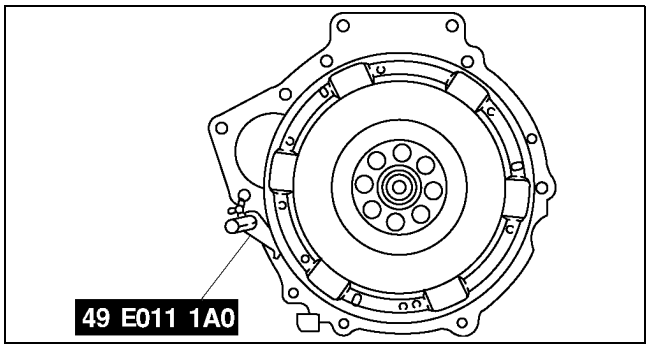

AME2524E066

3. Remove the timing belt pulley using the **SST**.

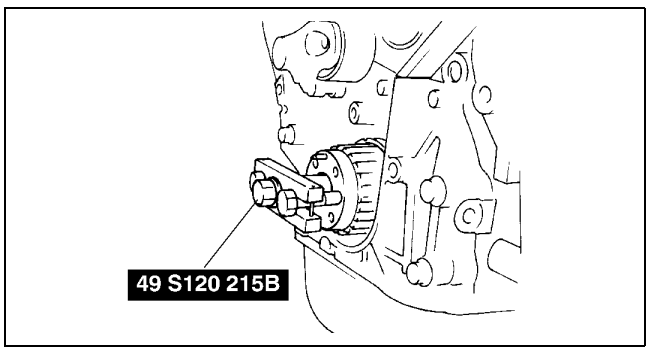

AME2524E007

Drive Gear Disassembly Note

1. Hold the camshaft using the **SST**.
2. Remove the drive gear lock bolt.

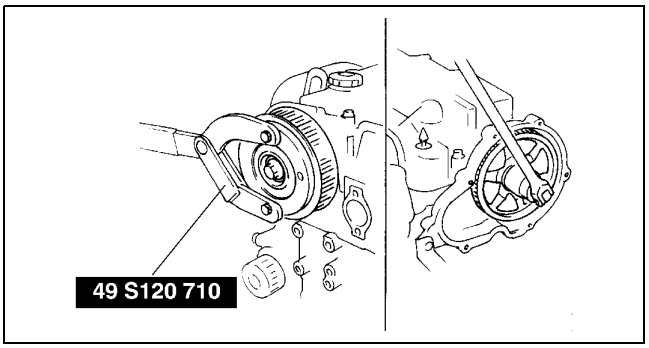

AME2524E008

Camshaft Pulley Disassembly Note

1. Hold the camshaft using the **SST**.
2. Remove the camshaft pulley lock bolt.

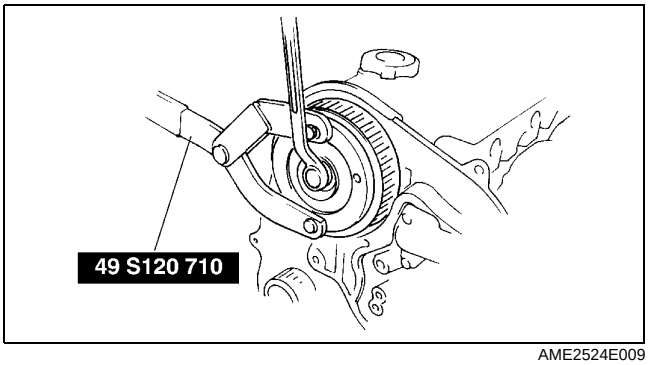

AME2524E009

3. Remove the camshaft pulley using the **SST**.

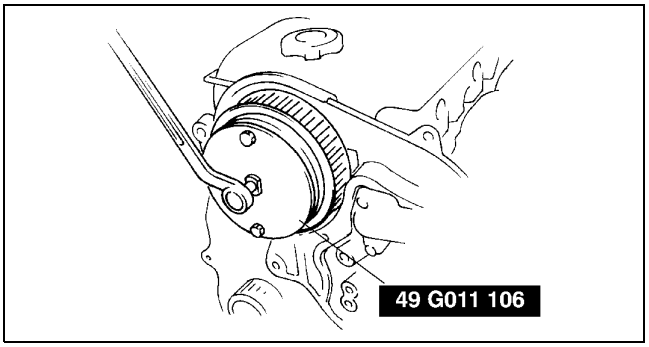

AME2524E010

CYLINDER HEAD (I) DISASSEMBLY

AME222402000104

1. Disassemble in the order indicated in the table.

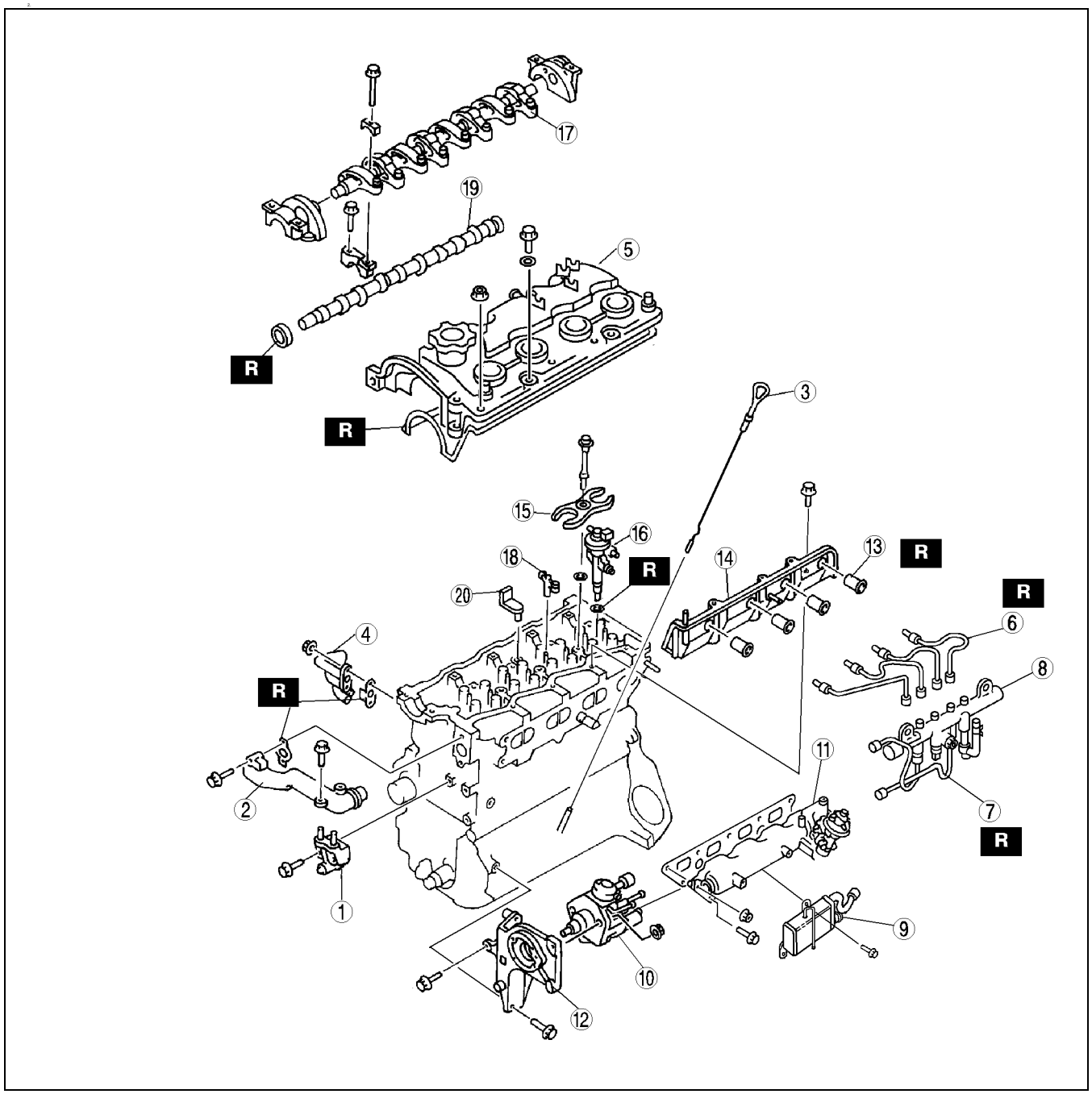

AME2524E014

1	No.3 engine mount bracket
2	Water outlet
3	Dipstick
4	Bypass pipe
5	Cylinder head cover
6	Fuel injection pipe
7	Fuel injection pipe
8	Common rail
9	EGR water cooler
10	Injection pump
11	Intake manifold

12	Injection pump bracket
13	Nozzle seal
14	Side wall
15	Injection nozzle bracket
16	Injection nozzle
17	Rocker arm and rocker arm shaft (See B–8 Rocker Arm and Rocker Arm Shaft Disassembly Note)
18	Rocker bridge
19	Camshaft
20	Breather pipe

Rocker Arm and Rocker Arm Shaft Disassembly Note

1. Inspect the camshaft end play.
   (See B–19 CAMSHAFT END PLAY INSPECTION)
2. Inspect the camshaft oil clearance.
   (See B–19 CAMSHAFT OIL CLEARANCE INSPECTION)
3. Loosen the bolts in two or three steps in the order shown.

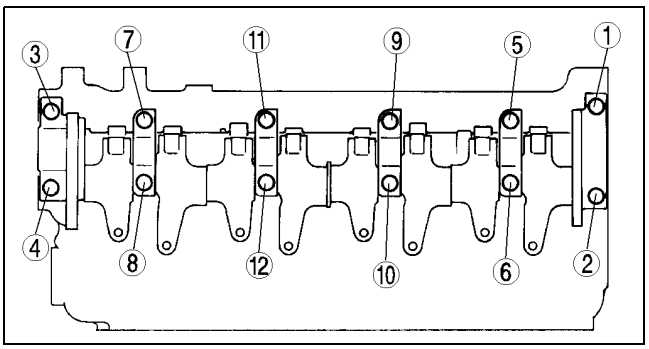

AME2521E001

CYLINDER HEAD (II) DISASSEMBLY

1. Disassemble in the order indicated in the table.

1	Glow plug, glow plug lead (See B–8 Glow Plug, Glow Plug Lead Disassembly Note)
2	Engine coolant temperature sensor
3	Cylinder head (See B–9 Cylinder Head Disassembly Note)
4	Cylinder head gasket
5	Valve keeper (See B–9 Valve Keeper Disassembly Note)
6	Upper valve spring seat
7	Valve spring
8	Lower valve spring seat
9	Valve
10	Valve seal (See B–9 Valve Seal Disassembly Note)

AME222402000115

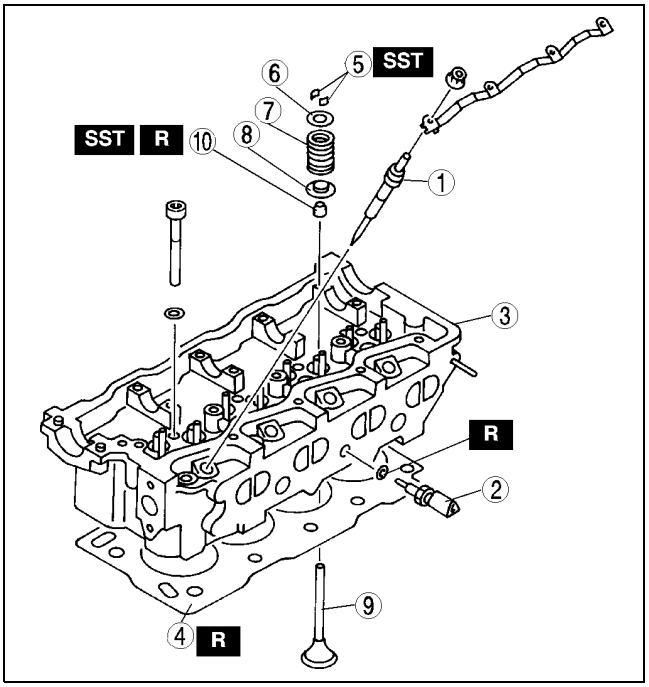

AME2524E019

Glow Plug, Glow Plug Lead Disassembly Note

Caution

- **Damaging heat-generating part of the plug can cause the plug to blow out. Do not use the plug if it is dropped from a height over 10 cm {3.9 in}.**
- **When removing the glow plug, loosen it one or more threads using tool, then further loosen by hand and remove it.**

Cylinder Head Disassembly Note

- Loosen the cylinder head bolts in two or three steps in the order shown.

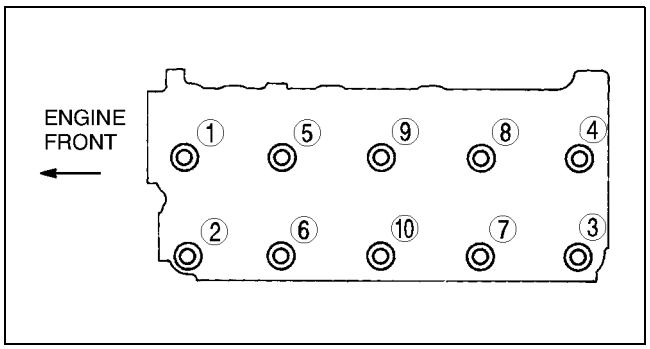

AME2524E020

Valve Keeper Disassembly Note

- Remove the valve keeper using the **SSTs**.

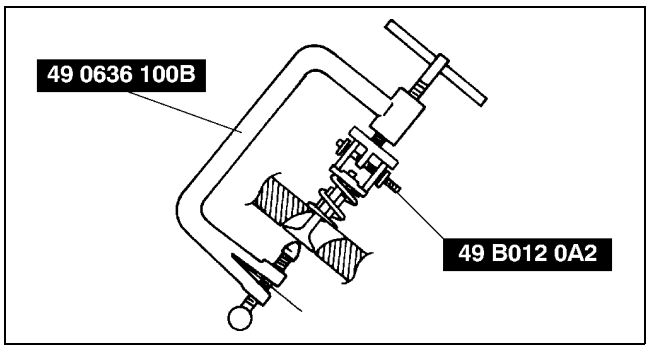

AME2511E001

Valve Seal Disassembly Note

1. Remove the valve seal using the **SST**.

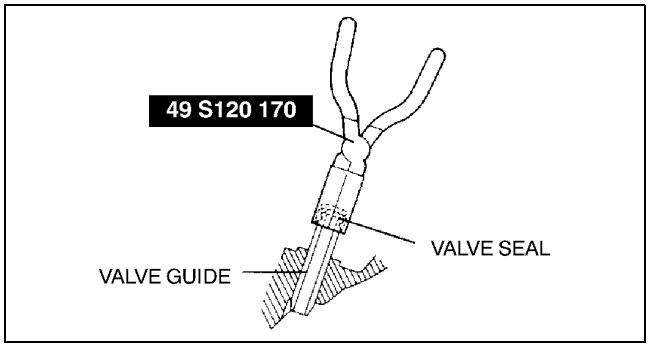

AME2511E002

CYLINDER BLOCK (I) DISASSEMBLY

AME222402000105

1. Disassemble in the order indicated in the table.

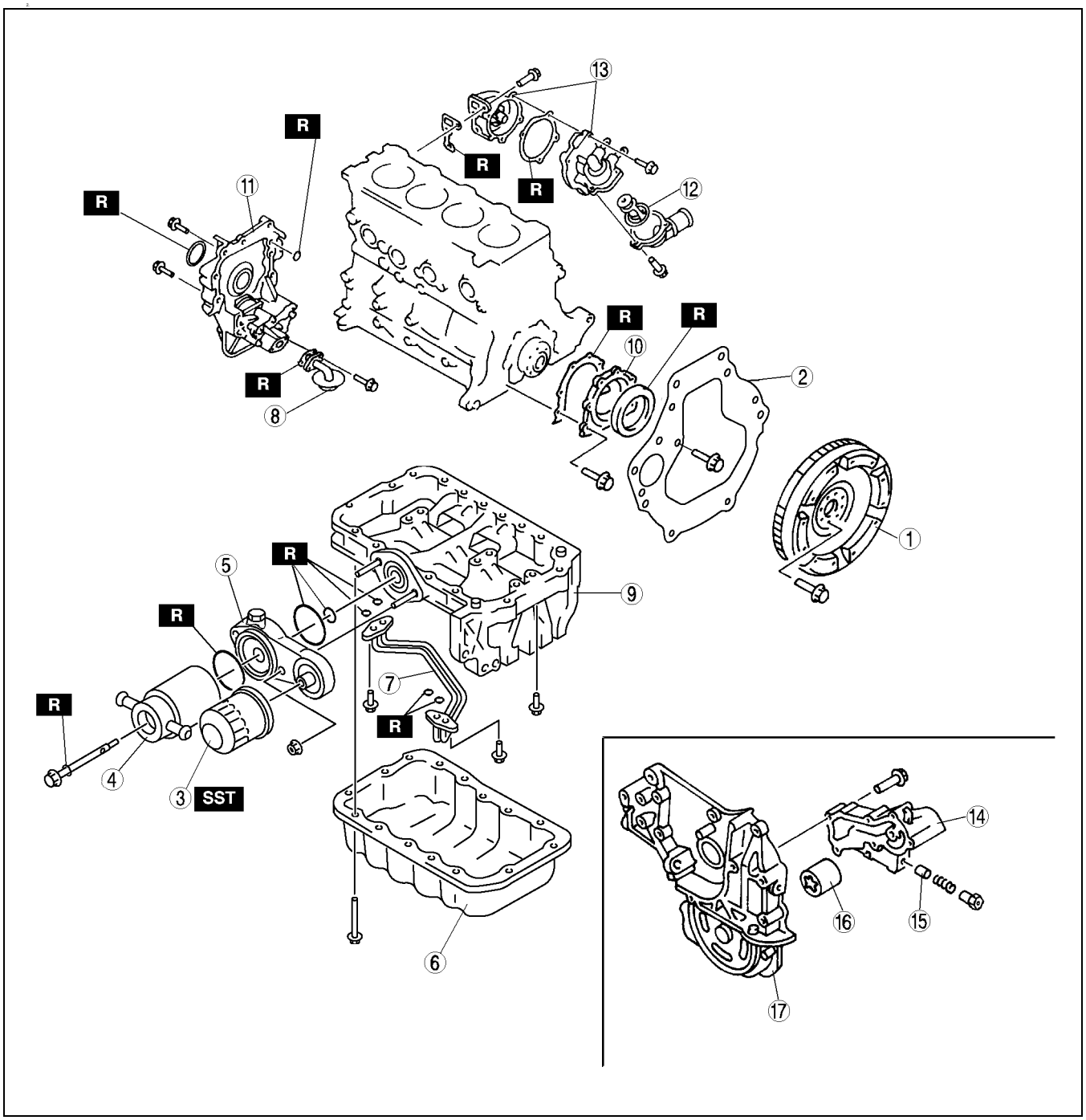

AME2524E174

1	Flywheel (See B–11 Flywheel Disassembly Note)
2	End plate
3	Oil filter
4	Oil cooler
5	Oil filter body
6	Oil pan (See B–11 Oil Pan Disassembly Note)
7	Oil pipe
8	Oil strainer
9	Oil pan upper block (See B–12 Oil Pan Upper Block Disassembly Note)

10	Rear cover (SeeB–12 Rear Cover Disassembly Note)
11	Oil pump (seeB–12 Oil Pump Disassembly Note)
12	Thermostat
13	Water pump
14	Oil pump cover
15	Relief valve
16	Outer roter
17	Oil pump body

Flywheel Disassembly Note

1. Hold the flywheel using the **SST**.
2. Loosen the bolts in two or three steps in the order shown.

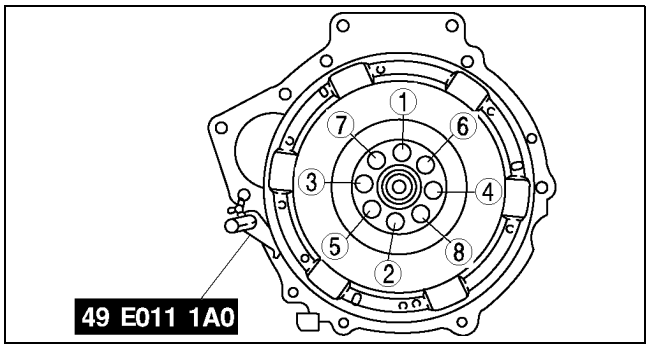

AME2524E072

Oil Pan Disassembly Note

1. Remove the oil pan mounting bolts.
2. Remove the sealant from the bolt threads.
3. Screw an oil pan bolt into the weldnut to make a small gap between the cylinder block and the oil pan.

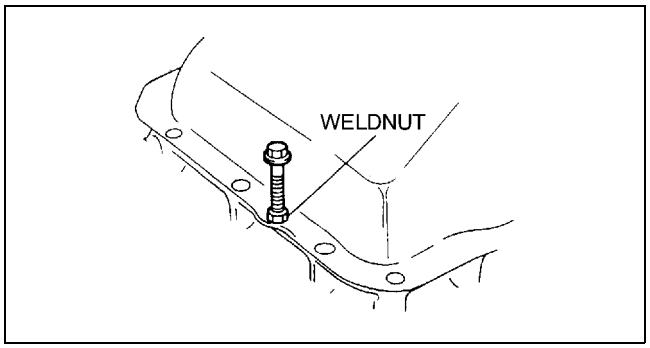

AME2524E024

4. Remove the oil pan using the separator tool.

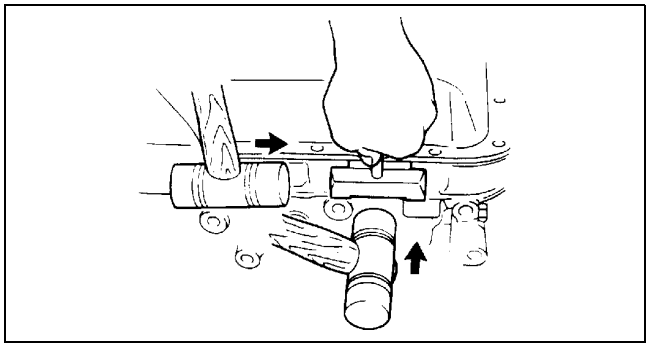

AME2524E025

Oil Pan Upper Block Disassembly Note

1. Loosen the oil pan upper block bolts in two or three steps in the order shown.
2. Remove the oil pan upper block

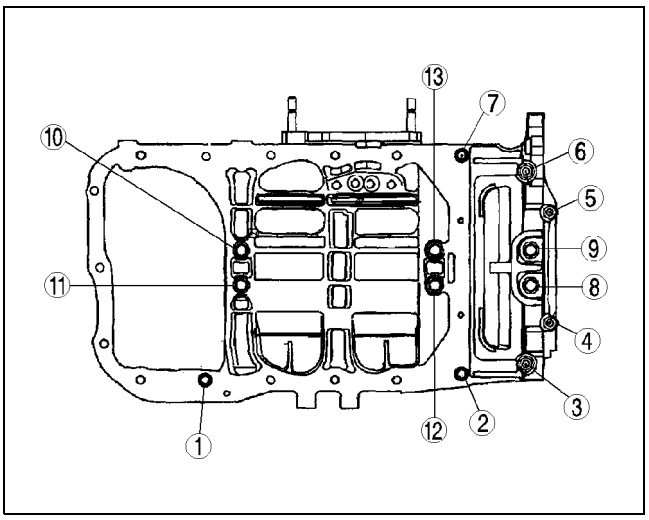

AME2524E078

Rear Cover Disassembly Note

1. Remove the oil seal using a screwdriver protected with a rag.

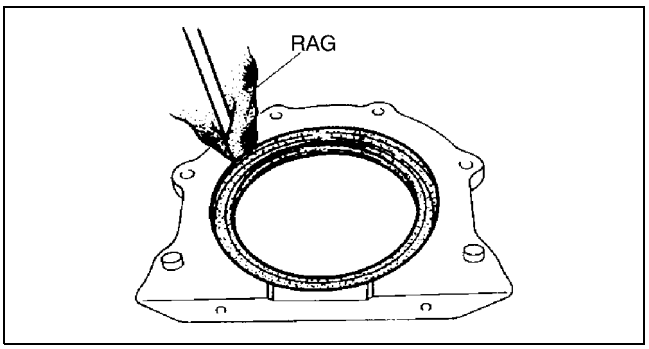

AME2522E001

Oil Pump Disassembly Note

1. Remove the oil seal using a screwdriver protected with a rag.

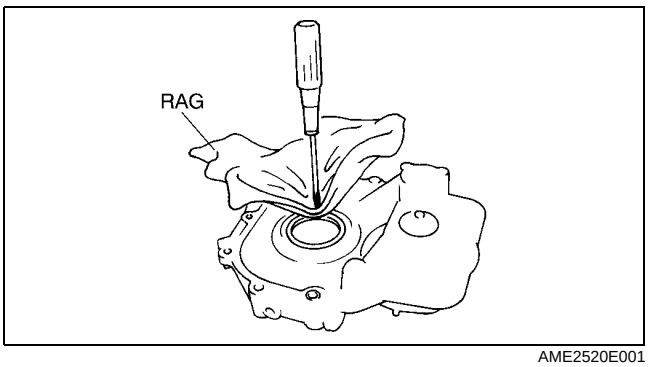

AME2520E001

CYLINDER BLOCK (II) DISASSEMBLY

AME222402000106

1. Disassemble in the order indicated in the table.

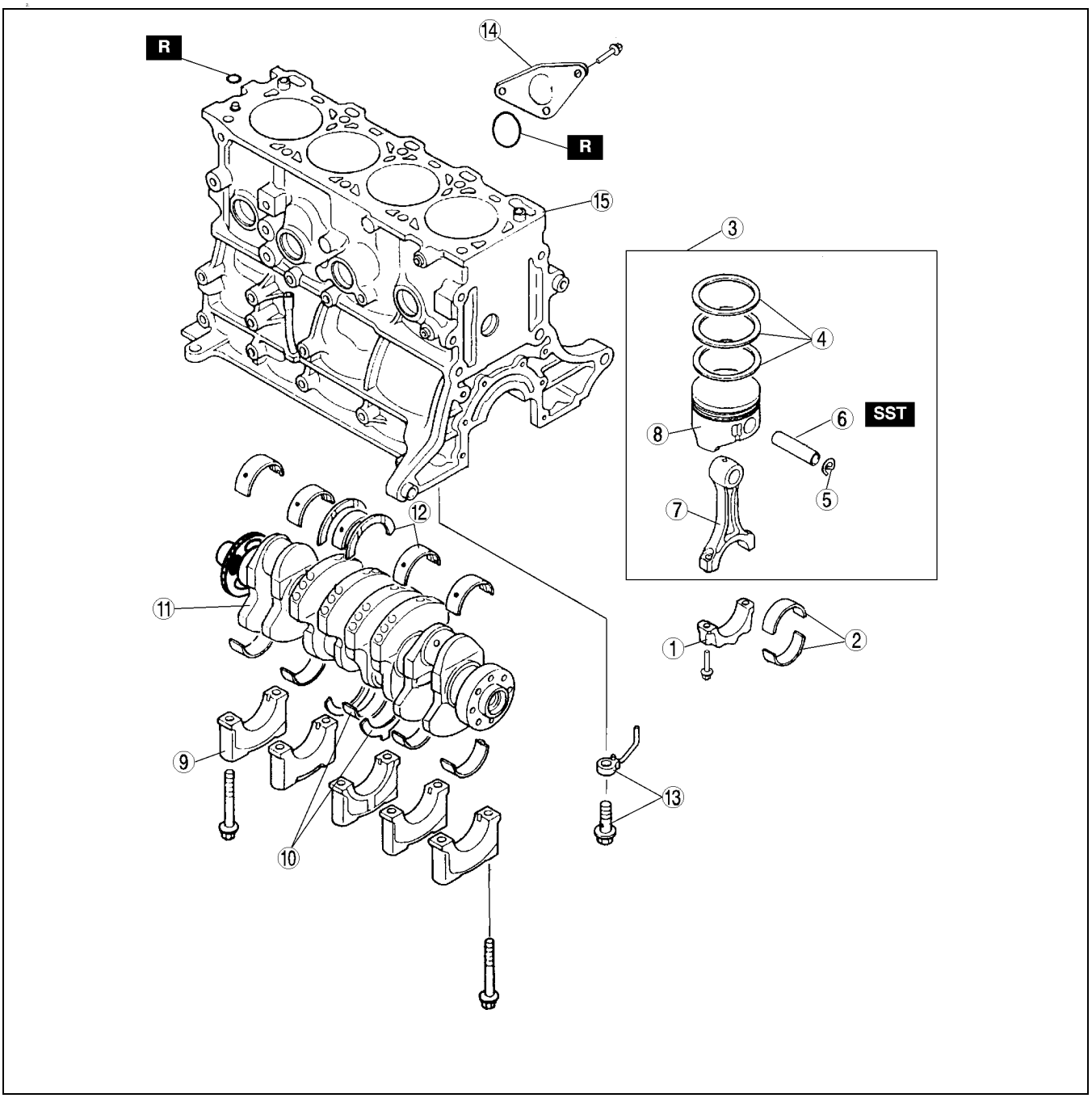

AME2524E035

1	Connecting rod cap (See B–14 Connecting Rod Cap Disassembly Note)
2	Connecting rod bearing
3	Connecting rod, piston (See B–14 Connecting Rod, Piston Disassembly Note)
4	Piston ring
5	Snap ring
6	Piston pin (See B–14 Piston Pin Disassembly Note)
7	Connecting rod

8	Piston
9	Main bearing cap (See B–14 Main Bearing Cap Disassembly Note)
10	Lower main bearing, thrust bearing
11	Crankshaft (See B–14 Crankshaft Disassembly Note)
12	Upper main bearing, thrust bearing
13	Oil jet
14	Cover
15	Cylinder block

Connecting Rod Cap Disassembly Note

1. Inspect the connecting rod side clearance.
   (See B–25 CONNECTING ROD SIDE CLEARANCE INSPECTION)

Connecting Rod, Piston Disassembly Note

1. Before disassembling the connecting rod and piston, remove the carbon on the cylinder wall.
2. Inspect the connecting rod oil clearance.
   (See B–24 CONNECTING ROD OIL CLEARANCE INSPECTION/REPAIR)

Piston Pin Disassembly Note

1. Inspect the oscillation torque.
   (See B–25 PISTON AND CONNECTING ROD INSPECTION)
2. Remove the piston pin using the **SST**.

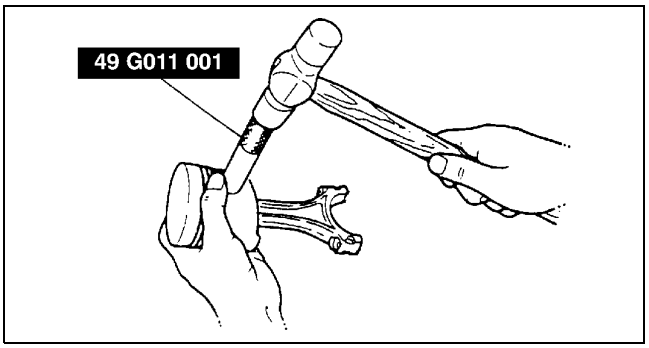

AME2524E034

Main Bearing Cap Disassembly Note

1. Inspect the crankshaft end play.
   (See B–24 CRANKSHAFT END PLAY INSPECTION/REPAIR)
2. Loosen the main bearing cap bolts in two or three steps in the order shown.

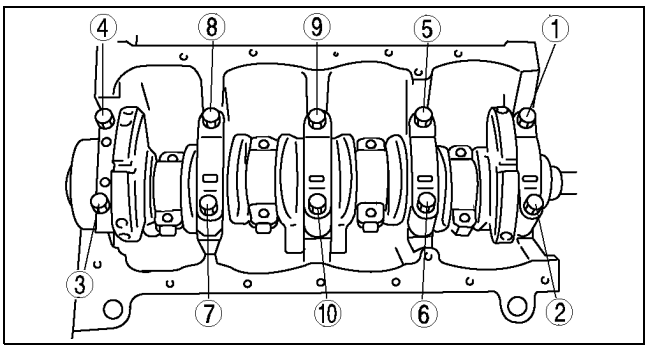

AME2524E068

Crankshaft Disassembly Note

1. Inspect the crankshaft oil clearance.
   (See B–23 CRANKSHAFT OIL CLEARANCE INSPECTION/REPAIR)

CYLINDER HEAD INSPECTION

AME222410100101

1. Carry out color contrast penetrate examination on the cylinder head surface. Replace the cylinder head if necessary.
2. Inspect for the following and repair or replace if necessary.
   (1) Sunken valve seats
   (2) Excessive camshaft oil clearance and end play

3. Measure the cylinder head for distortion in the seven directions as shown.

   Maximum distortion
   X distortion: 0.01 mm {0.0004 in}
   Y distortion: 0.04 mm {0.0016 in}

4. If the cylinder head distortion exceeds the maximum, replace the cylinder head. Do not attempt to repair the cylinder head by milling or grinding.

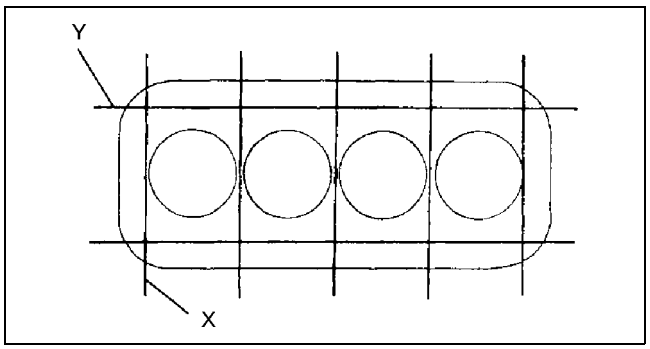

AME2524E038

5. Measure the manifold contact surface distortion as shown.

   Maximum distortion
   0.06 mm {0.0024 in}

6. If the distortion exceeds the maximum, grind the surface or replace the cylinder head.

   Maximum grinding
   0.20 mm {0.008 in}

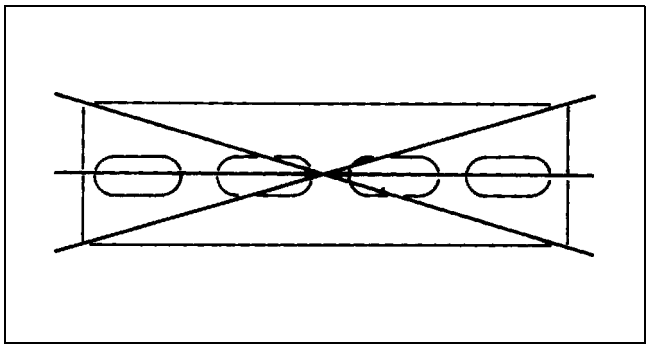
AME2524E039

VALVE, VALVE GUIDE INSPECTION

AME222412111101

1. Measure the valve head margin thickness of each valve. Replace the valve if necessary.

   Minimum margin thickness
   IN: 0.8 mm {0.0315 in}
   EX: 1.0 mm {0.0394 in}

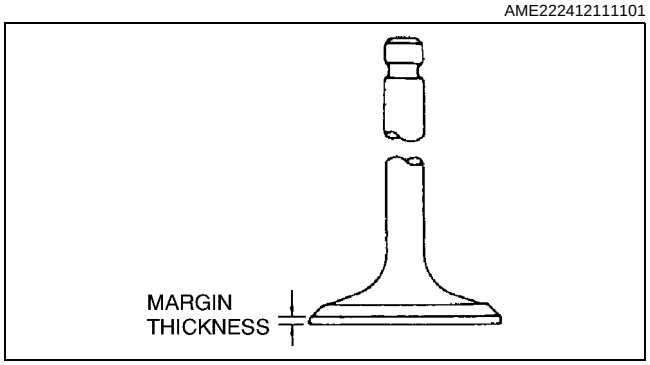

AME2511E005

2. Measure the length of each valve. Replace the valve if necessary.

   Standard length
   IN: 115.01—115.51 mm {4.528—4.547 in}
   EX: 114.35—114.85 mm {4.502—4.521 in}

   Minimum length
   IN: 114.785 mm {4.519 in}
   EX: 114.125 mm {4.493 in}

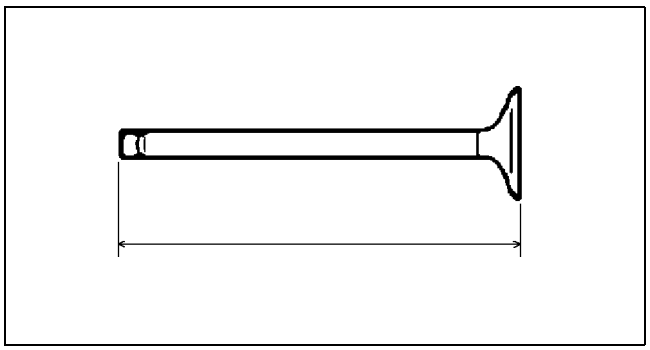
AMJ2224E071

3. Measure the stem diameter of each valve in X and Y directions at the three points (A, B, and C) shown. Replace the valve if necessary.

   Standard diameter
   IN: 5.970—5.985 mm {0.2351—0.2356 in}
   EX: 5.965—5.980 mm {0.2349—0.2354 in}

   Minimum diameter
   IN: 5.920 mm {0.2331 in}
   EX: 5.915 mm {0.2329 in}

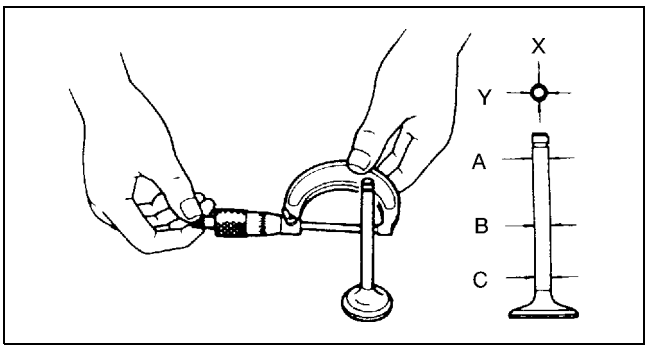

AME2511E006

4. Measure the inner diameter of each valve guide in X and Y directions at the three points (A, B, and C) shown. Replace the valve guide if necessary.

   Standard inner diameter
   6.030—6.050 mm {0.2374—0.2381 in}

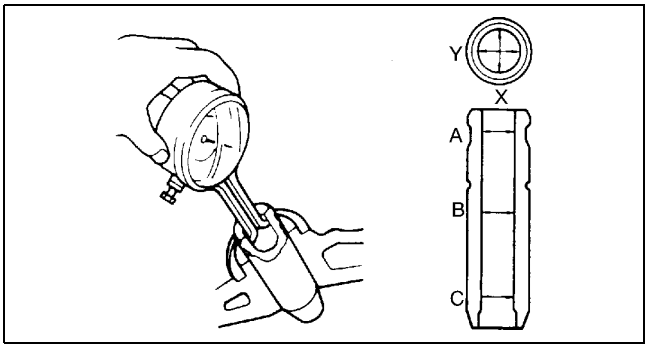

AME2511E007

5. Measure the protrusion height (dimension A) of each valve guide without lower valve spring seat. Replace the valve guide if necessary.

   Standard height
   IN: 18.7—19.2 mm {0.737—0.755 in}
   EX: 17.6—18.1 mm {0.693—0.712 in}

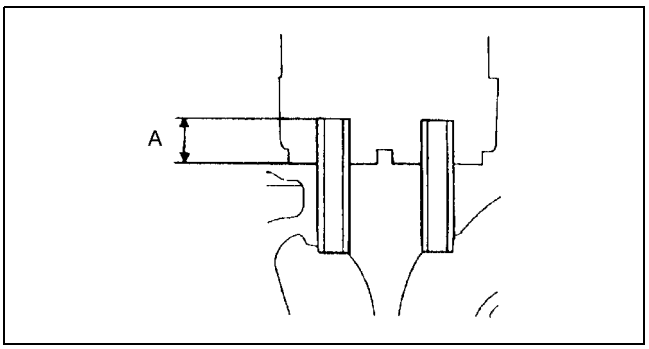

AME2511E008

VALVE GUIDE REPLACEMENT

AME222410280102

Valve Guide Removal

1. Remove the valve guide from the combustion chamber side using the **SST**.

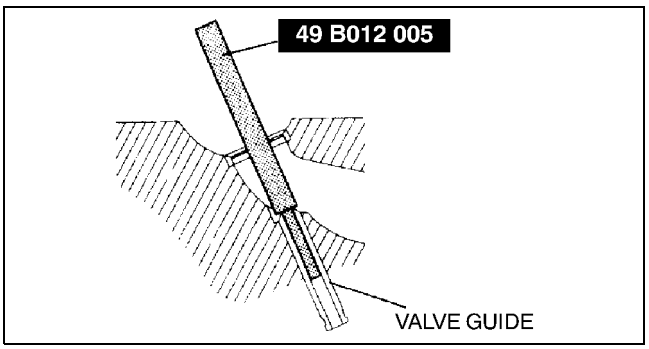

AME2511E009

Valve Guide Installation

1. Assemble the **SSTs** so that depth L is as specified.

   Depth L
   IN: 18.7—19.2 mm {0.737—0.755 in}
   EX: 17.6—18.1 mm {0.693—0.712 in}

2. Tap the valve guide in from the side opposite the combustion chamber until the **SSTs** contacts the cylinder head.

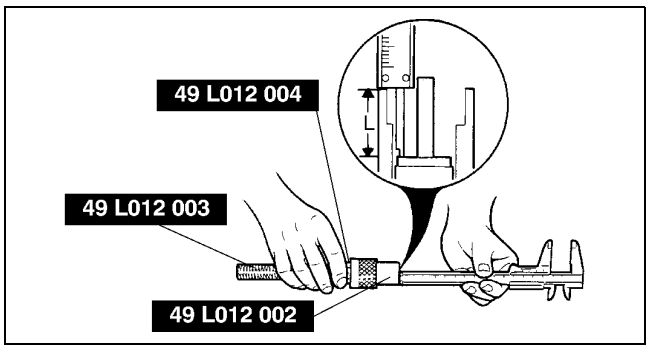

AME2511E010

3. Verify that the valve guide projection height is within the specification.

   Standard height
   IN: 18.7—19.2 mm {0.737—0.755 in}
   EX: 17.6—18.1 mm {0.693—0.712 in}

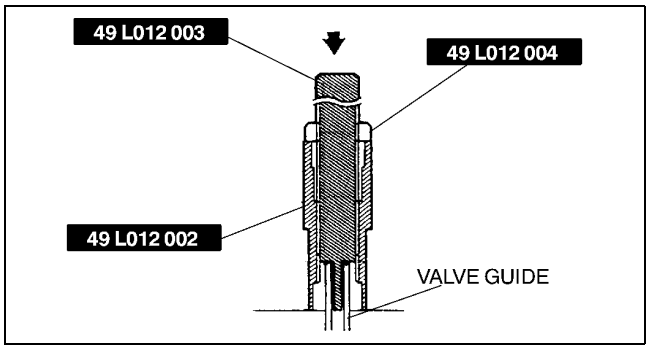

AME2511E011

VALVE SEAT INSPECTION/REPAIR

AME222410102102

1. Measure the seat contact width. If necessary, resurface the valve seat using a 45° valve seat cutter or resurface the valve face or both.

   Standard width
   IN: 1.3—1.9 mm {0.052—0.074 in}
   EX: 1.3—1.9 mm {0.052—0.074 in}

2. Verify that the valve seating position is at the center of the valve face.
   (1) If the seating position is too high, correct the valve seat using a **65°** (IN) or **75°** (EX) cutter, and a **45°** cutter.
   (2) If the seating position is too low, correct the valve seat using a **30°** cutter, and a **45°** cutter.

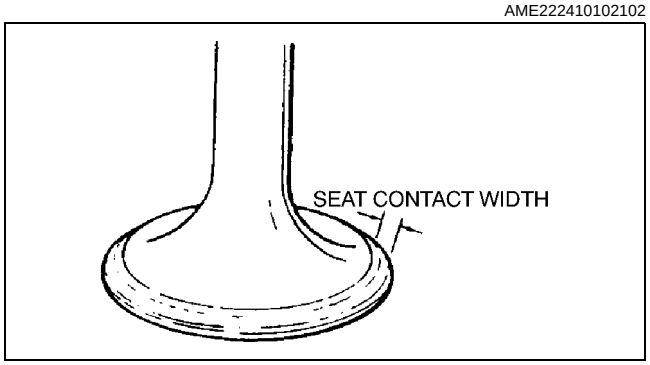

AME2511E012

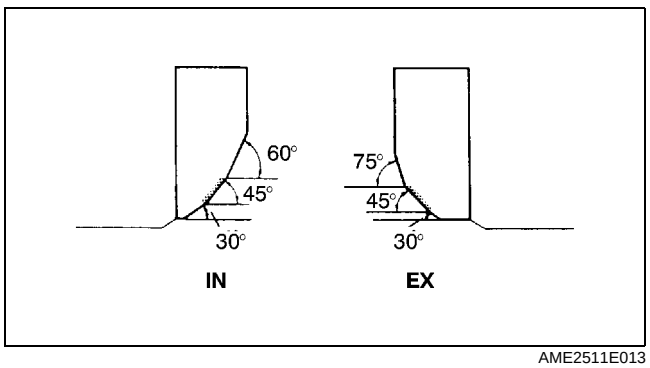

AME2511E013

3. Measure the receded amount from the cylinder head surface. If it exceeds the maximum, replace the cylinder head.

   Standard recession
   IN: 0.42—0.90 mm {0.017—0.035 in}
   EX: 0.46—0.94 mm {0.019—0.037 in}

   Maximum recession
   IN: 1.25 mm {0.049 in}
   EX: 1.29 mm {0.051 in}

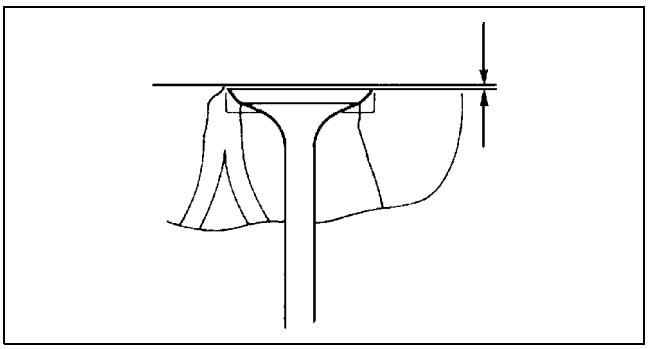

AME2511E014

VALVE SPRING INSPECTION

AME222412125101

1. Apply pressure to the pressure spring and check the spring height. Replace the valve spring if necessary.

   Pressing force
   172.1—194.9 N {17.55—19.87 kgf, 38.61—43.79 lbf}

   Standard height
   38.0 mm {1.50 in}

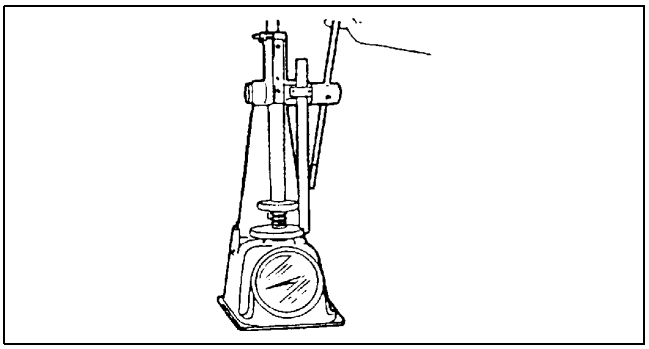

AME2511E015

2. Measure the out-of-square of the valve spring. Replace the valve spring if necessary.

   Maximum valve spring out-of-square
   1.55mm {0.061 in}

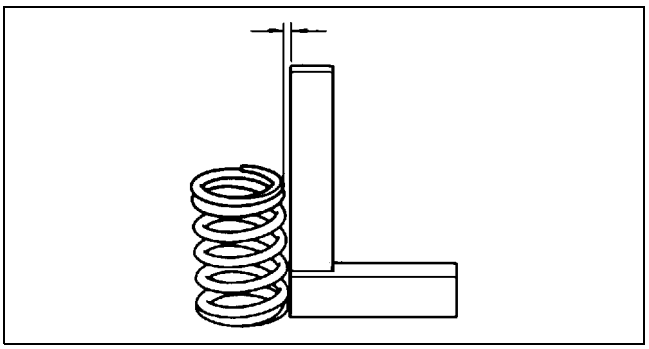

AME2511E016

CAMSHAFT INSPECTION

AME222412420102

1. Set No.1 and No.6 journals on V-blocks. Measure the camshaft runout. Replace the camshaft if necessary.

   Maximum runout
   0.03 mm {0.0012 in}

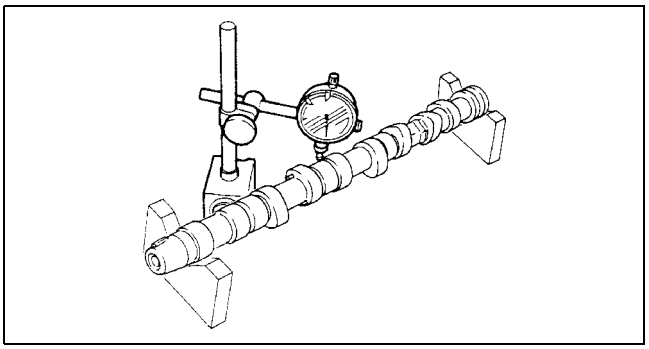

AME2517E001

2. Measure the cam lobe height at the two points as shown. Replace the camshaft if necessary.

   Standard height
   IN: 40.140 mm {1.5803 in}
   EX: 39.809 mm {1.5673 in}

   Minimum height
   IN: 39.940 mm {1.5724 in}
   EX: 39.609 mm {1.5594 in}

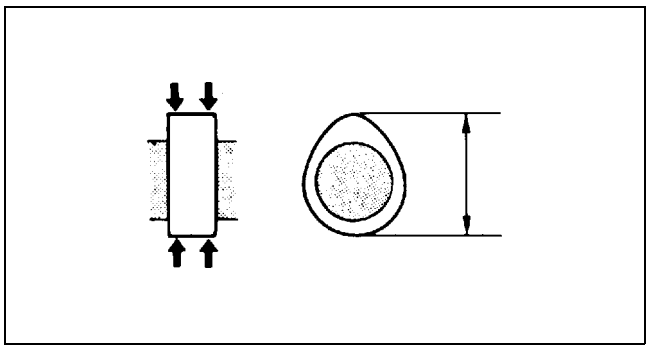

AME2517E002

3. Measure the journal diameters in X and Y directions at the two points (A and B) as shown. Replace the camshaft if necessary.

   Standard diameter
   31.950—31.975 mm {1.2579—1.2588 in}

   Minimum diameter
   31.920 mm {1.2567 in}

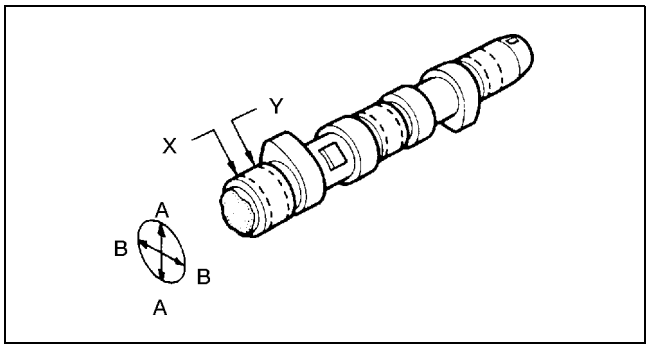

AME2517E003

CAMSHAFT OIL CLEARANCE INSPECTION

AME222412420103

1. Position plastigage atop the journals in the axial direction.
2. Install the camshaft cap and rocker arm shaft. (See B–40 Rocker Arm and Rocker Arm Shaft Assembly Note)
3. Remove the camshaft cap and rocker arm shaft. (See B–8 Rocker Arm and Rocker Arm Shaft Disassembly Note)
4. Measure the oil clearance. Replace the cylinder head if necessary.

   Standard clearance
   0.025—0.030 mm {0.0010—0.0011 in}

   Maximum clearance
   0.075 mm {0.0030 in}

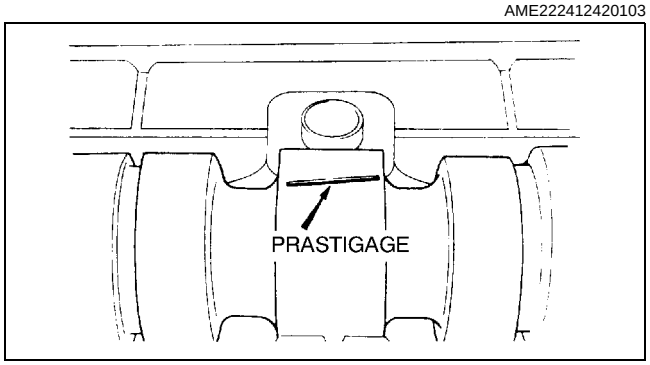

AME2517E004

CAMSHAFT END PLAY INSPECTION

AME222412420104

1. Install the camshaft cap and rocker arm shaft. (See B–40 Rocker Arm and Rocker Arm Shaft Assembly Note)

   Standard end play
   0.03—0.16 mm {0.0012—0.0062 in}

   Maximum end play
   0.20 mm {0.0079 in}

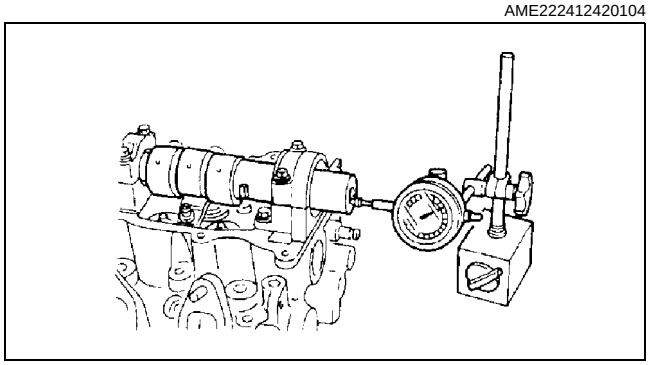

AME2517E005

2. Measure the camshaft end play. Replace the cylinder head or camshaft if necessary.
3. Remove the camshaft cap and rocker arm shaft. (See B–8 Rocker Arm and Rocker Arm Shaft Disassembly Note)

CYLINDER BLOCK INSPECTION/REPAIR

AME222410300102

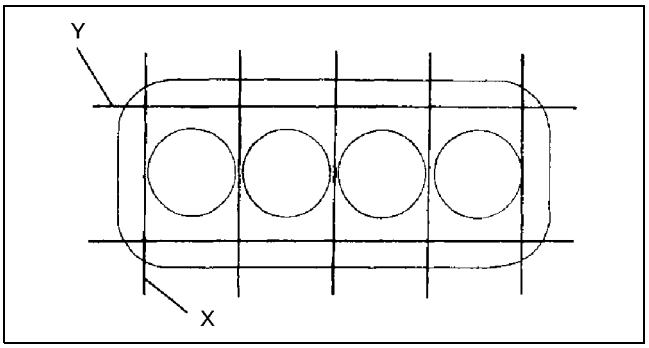

AME2524E038

1. Measure the distortion of the cylinder block top surface in the seven directions as shown. Replace in necessary.

   Maximum cylinder block distortion
   X direction 0.01 mm {0.0004 in}
   Y direction 0.03 mm {0.0012 in}

2. Measure the cylinder bores in X and Y directions at three levels (A,B and C) in each cylinder as shown.
3. If the cylinder bore exceeds the wear limit, replace the cylinder block or rebore the cylinder and install the oversize pistons so that the specified piston-to-cylinder clearance is obtained.

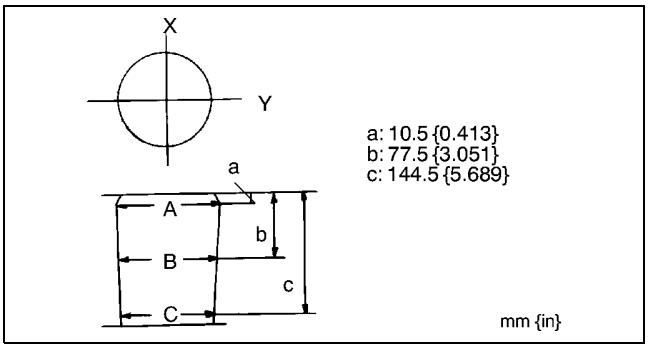

AME2524E040

Note
- Base the boring diameter on the diameter of an oversize piston. All cylinders must have the same diameter.

Cylinder bore

(mm {in})

Size	Diameter
Standard	86.000—86.022 {3.3859—3.3866}
0.25 {0.01} oversize	86.250—86.272 {3.3957—3.3965}
0.50 {0.02} oversize	86.500—86.522 {3.4055—3.4063}

Wear limit
0.15 mm {0.006 in}

OIL JET VALVE, NOZZLE INSPECTION

AME222410730101

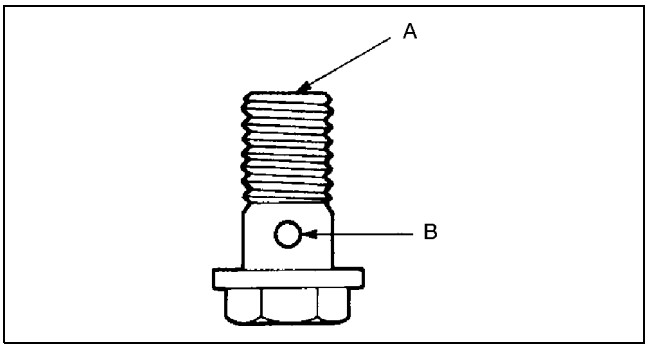

AME2524E041

1. Apply compressed air to oil jet valve port A and verify that air passes through oil jet valve port B. If not, replace the oil jet valve.

   Air pressure
   138—196 kpa {1.4—2.0 kgf/cm^2, 20—28 psi}

2. Inspect the oil jet nozzle for clogging. Replace the nozzle if necessary.

PISTON INSPECTION

AME222411010102

- Measure the outer diameter of each piston at right angle (**90°**) to the piston pin, **10.0 mm {0.39 in}** above the bottom of piston.

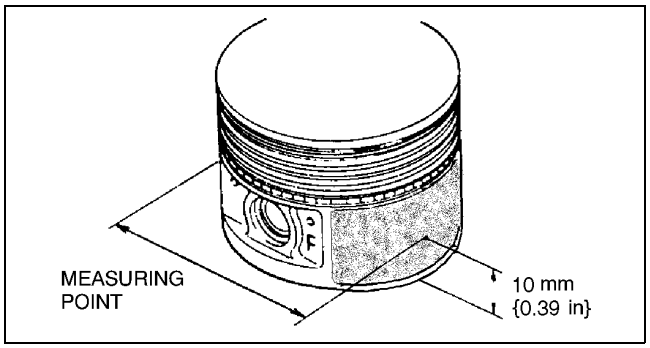

AME2524E042

Piston diameter

mm {in}

Size	Diameter
Standard	85.973—86.015 {3.3848—3.3864}
0.25 {0.01} oversize	86.223—86.265 {3.3946—3.3962}
0.50 {0.02} oversize	86.473—86.515 {3.4045—3.4061}

PISTON CLEARANCE INSPECTION/REPAIR

AME222411010103

1. Measure the piston-to-cylinder clearance.
   Replace the piston or rebore the cylinders to fit oversize piston if necessary.

   Standard clearance
   0—0.034 mm {0—0.0013 in}

   Maximum clearance
   0.10 mm {0.0039 in}

2. If the piston is replaced, the piston rings must also be replaced.

PISTON RING CLEARANCE INSPECTION

AME222411010104

1. Measure the piston ring-to-ring gloove clearance around the entire circumference. Replace the piston and piston ring if necessary.

   Standard clearance
   Top: 0.05—0.09 mm {0.0020—0.0035 in}
   Second: 0.04—0.08mm {0.0016—0.0031 in}
   Oil: 0.03—0.07mm {0.0012—0.0027 in}

   Maximum clearance
   0.15 mm {0.0059 in}

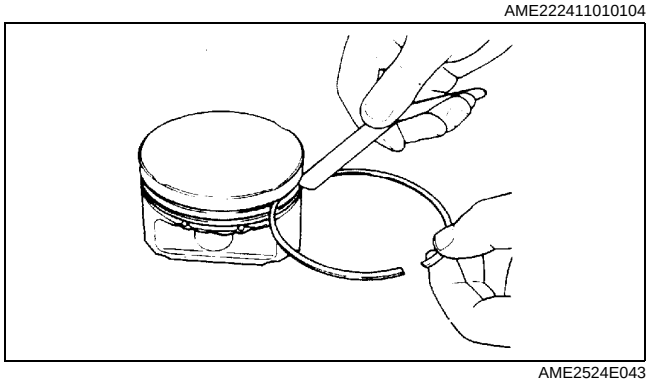

AME2524E043

2. Insert the piston ring into the cylinder by hand and use the piston to push it to the bottom of the ring travel.
3. Measure each piston ring end gap using a feeler gauge. Replace the piston ring if necessary.

   Standard end gap
   Top: 0.20—0.30 mm {0.008—0.011 in}
   Second: 0.20—0.30 mm {0.008—0.011 in}
   Oil rail: 0.20—0.30 mm {0.008—0.011 in}

   Maximum end gap
   1.0 mm {0.039 in}

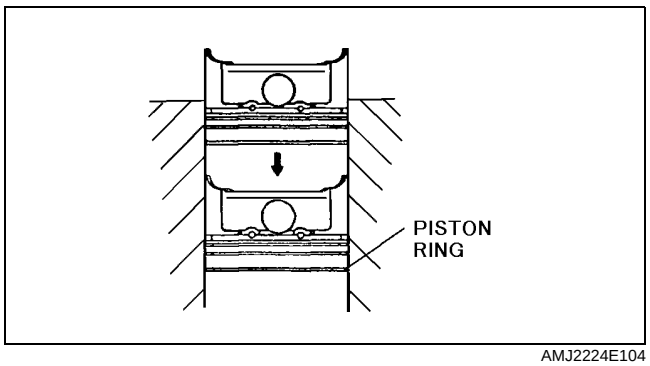

AMJ2224E104

PISTON PIN CLEARANCE INSPECTION

AME222411010105

1. Measure each piston pin hole diameter in X and Y directions at the four points (A, B, C, and D) as shown.

   Standard diameter
   29.997—30.007 mm {1.1810—1.1813 in}

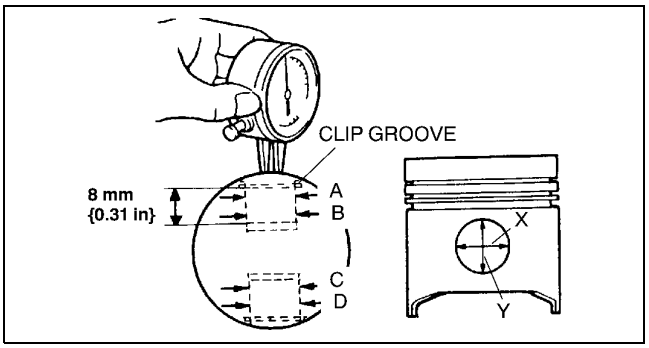

AME2524E044

2. Measure each connecting rod small end inner diameter in X and Y directions as shown.

   Standard diameter
   30.014—30.030 mm {1.1817—1.1822 in}

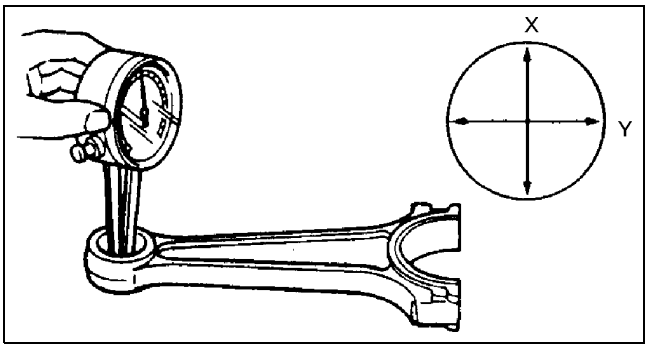

AME2524E045

3. Measure each piston pin diameter in X and Y directions at the four points (A, B, C, and D) as shown.

   Standard diameter
   29.994—30.000 mm {1.1809—1.1811 in}

4. Calculate the piston pin-to-piston pin bore clearance. Replace the piston or piston pin or both if necessary.

   Standard clearance
   - 0.003—0.013 mm {-0.00011—0.00051 in}

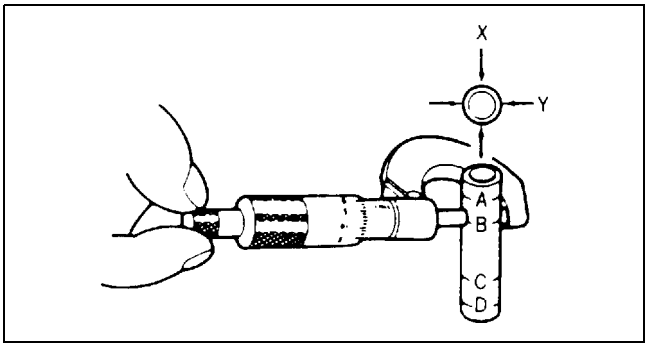

AME2524E046

5. Calculate the clearance between connecting rod small end and piston pin. Replace the connecting rod or piston pin if necessary.

   Standard clearance
   0.014—0.036 mm {0.00056—0.00141 in}

CRANKSHAFT INSPECTION

AME222411301101

1. Measure the crankshaft runout. Replace the crankshaft if necessary.

   Maximum runout
   0.03 mm {0.001 in}

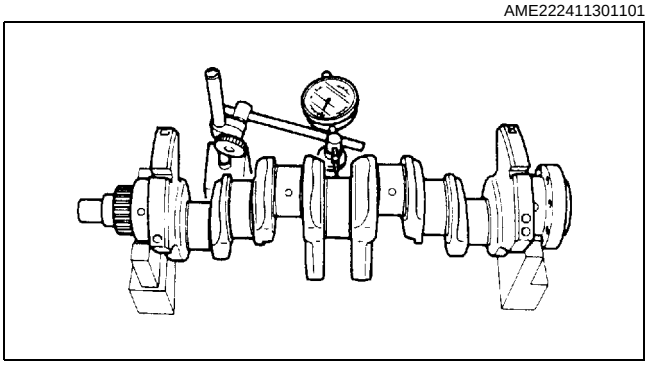

AME2524E047

2. Measure the journal diameter in X and Y direction at the two points (A and B) as shown. Replace the crankshaft or grind the journal, and install the undersize bearing if necessary.

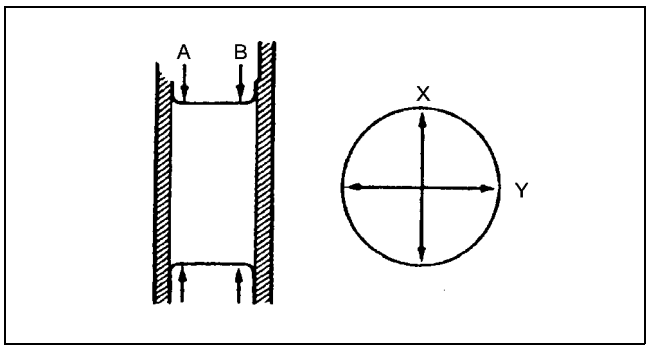

AMJ2224E036

Main Journal

(mm {in})

Bearing size	Diameter
Standard	59.937—59.955 {2.3598—2.3604}
0.25 {0.01} undersize	59.687—59.705 {2.3499—2.3505}
0.50 {0.02} undersize	59.437—59.455 {2.3401—2.3407}
0.75 {0.03} undersize	59.187—59.205 {2.3302—2.3309}

Out-of-round
0.03 mm {0.001 in} max.

Crank pin

(mm {in})

Bearing size	Diameter
Standard	50.940—50.955 {2.0056—2.0060}
0.25 {0.01} undersize	50.690—50.705 {1.9957—1.9962}
0.50 {0.02} undersize	50.440—50.455 {1.9859—1.9864}
0.75 {0.03} undersize	50.190—50.205 {1.9760—1.9765}

Out-of-round
0.03 mm {0.001 in} max.

CRANKSHAFT OIL CLEARANCE INSPECTION/REPAIR

AME222411301102

1. Position a plastigage above the journals in the axial direction.
2. Install the main bearing cap. (See B–31 Main Bearing Cap Assembly Note)
3. Remove the main bearing cap. (See B–14 Main Bearing Cap Disassembly Note)
4. Measure the main journal oil clearance. If the clearance exceeds the maximum, replace the main bearing or grind the main journal, and install the undersize bearings so that the specified oil clearance is obtained.

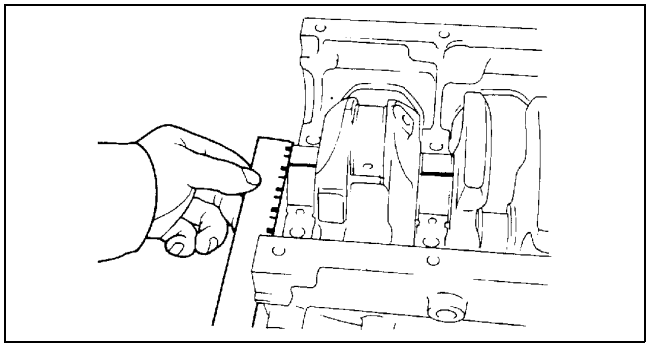
AME2524E049

Standard clearance
0.025—0.044 mm {0.0010—0.0017 in}

Maximum clearance
0.08 mm {0.003 in}

(mm {in})

Bearing size	Bearing thickness
Standard	2.007—2.022 {0.0791—0.0796}
0.25 {0.01} oversize	2.129—2.139 {0.0839—0.0842}
0.50 {0.02} oversize	2.254—2.264 {0.0888—0.0891}
0.75 {0.03} oversize	2.379—2.389 {0.0937—0.0940}

CRANKSHAFT END PLAY INSPECTION/REPAIR

AME222411301103

1. Install the main bearing cap. (See B–31 Main Bearing Cap Assembly Note)
2. Measure the crankshaft end play. If the end play exceeds the maximum, replace the thrust bearing or grind the crankshaft, and install an undersize bearing so that the specified end play is obtained.

   Standard end play
   0.040—0.282 mm {0.00158—0.01110 in}

   Maximum end play
   0.30 mm {0.012 in}

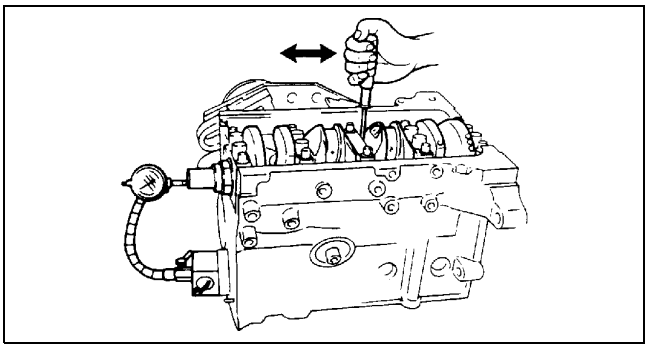

AME2524E050

(mm {in})

Bearing size	Bearing thickness
Standard	2.00—2.05 {0.0788—0.0807}
0.35 {0.01} oversize	2.175—2.225 {0.0857—0.0876}

3. Remove the main bearing cap. (See B–14 Main Bearing Cap Disassembly Note)

CONNECTING ROD INSPECTION

AME222411211101

- Measure bending and distortion for each connecting rod. Replace the connecting rod if necessary.

  Bending
  0.080 mm {0.0031 in} max. /50 mm {2.0 in}

  Distortion
  0.080 mm {0.0031 in} max. /50 mm {2.0 in}

  Center-to-center distance
  151.95—152.05 mm {5.983—5.986 in}

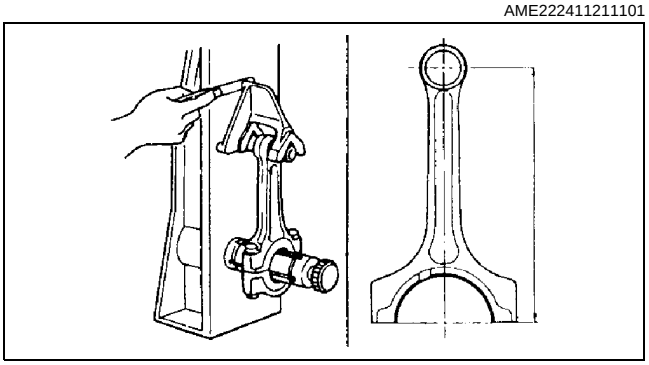

AME2524E051

CONNECTING ROD OIL CLEARANCE INSPECTION/REPAIR

AME222411211102

1. Position a plastigage above the journals in the axial direction.
2. Install the connecting rod cap. (See B–32 Connecting Rod Cap Assembly Note)
3. Remove the connecting rod cap.
4. Measure the crankpin oil clearance. If the clearance exceeds the maximum, replace the connecting rod bearing or grind the crankpin and use undersize bearings so that the specified clearance is obtained.

   Standard clearance
   0.027—0.055 mm {0.0011—0.0021in}

   Maximum clearance
   0.10 mm {0.0039 in}

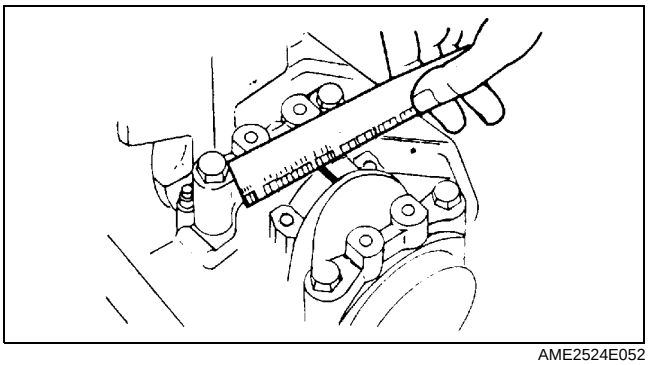

AME2524E052

(mm {in})

Bearing size	Bearing thickness
Standard	1.506—1.515{0.0593—0.0596}
0.25 {0.01} oversize	1.630—1.640{0.0642—0.0645}
0.50 {0.02} oversize	1.755—1.765{0.0691—0.0694}
0.75 {0.03} oversize	1.880—1.890{0.0741—0.0744}

CONNECTING ROD SIDE CLEARANCE INSPECTION

AME222411211103

1. Install the connecting rod cap. (See B–32 Connecting Rod Cap Assembly Note)
2. Measure the connecting rod large end side clearance. Replace the connecting rod and cap if necessary.

   Standard clearance
   0.110—0.262 mm {0.0044—0.0103 in}

   Maximum clearance
   0.512 mm {0.0202 in}

3. Remove the connecting rod cap.

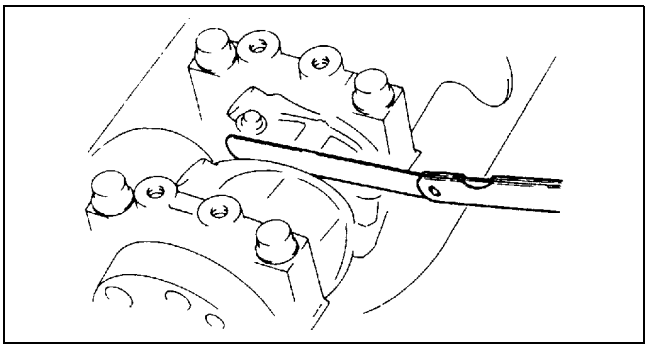

AME2524E053

PISTON AND CONNECTING ROD INSPECTION

AME222411010106

- Insert the oscillation torque as shown.
  If the large end does not drop by its own weight, replace the piston or the piston pin.

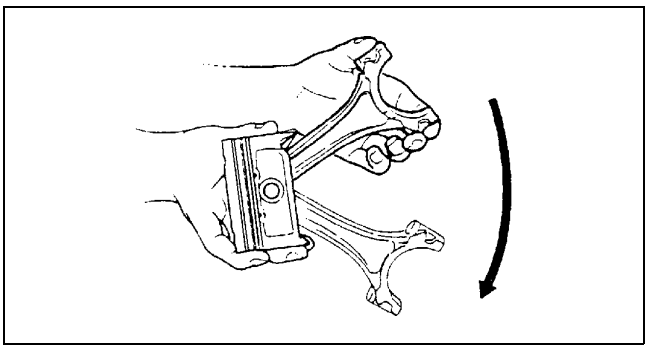

AME2524E054

CYLINDER HEAD BOLT INSPECTION

AME222410100102

- Measure the length of each connecting rod bolt. Replace if necessary.

  Maximum length
  161.0 mm {6.338 in}

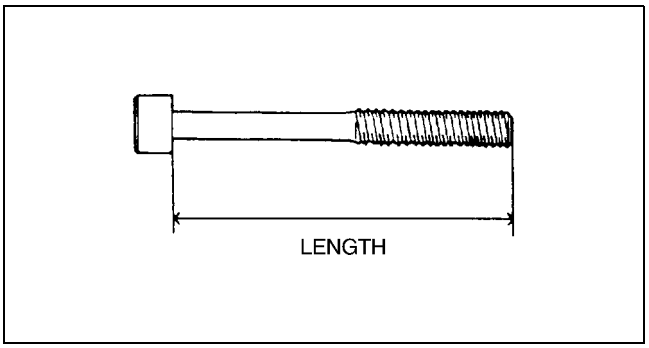

AME2524E055

TIMING BELT AUTO TENSIONER INSPECTION

AME222412711102

1. Measure the tensioner rod projection length.
2. Inspect the auto tensioner for oil leakage.
   Replace the auto tensioner if necessary.

   Projection (Free length)
   12.9—14.6 mm {0.508—0.574 in}

3. Inspect for the resistance of the auto tensioner rod, when it is pushed with a force of approximately **235 N {24 kgf, 53 lbf}**.
   If there is no resistance on the tensioner rod is not resistance and it moves slightly, perform the following procedure.

   Caution
   - **To prevent damage to the inside of the auto tensioner, do not press down the auto tensioner rod with a force greater than the specified 235 N {24 kgf, 53 lbf}. Be careful that the rod does not touch the bottom.**

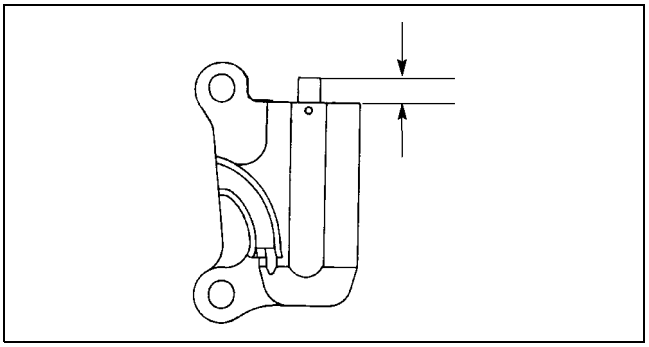

AME2524E056

   (1) Push it down slowly two or three times to the bottom end of the end.
   (2) When the rod protrudes approximately **8.1 mm {0.32 in}**, verify that the resistance is restored on the tensioner rod.
   If the resistance is not restored, replace the auto tensioner.

PILOT BEARING INSPECTION

AME222411501101

- Verify that the pilot bearing rotates smoothly without any abnormal noise. Replace if necessary.

Replacement

1. Remove the pilot bearing from the crankshaft using the **SST**.

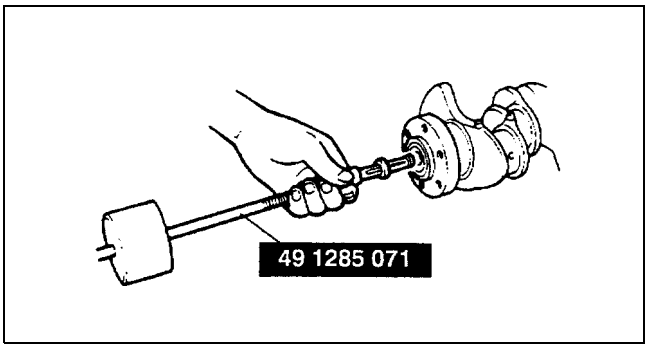

AME2524E080

2. Install the pilot bearing using the **SSTs**.

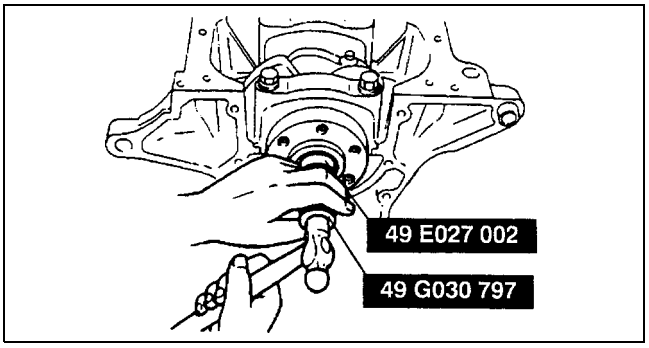

AME2524E081

OIL PUMP INSPECTION

AME222419220101

Relief Spring

- Measure the free length of the relief spring. Replace the relief spring if necessary.

Free length
43.8 mm {1.724 in}

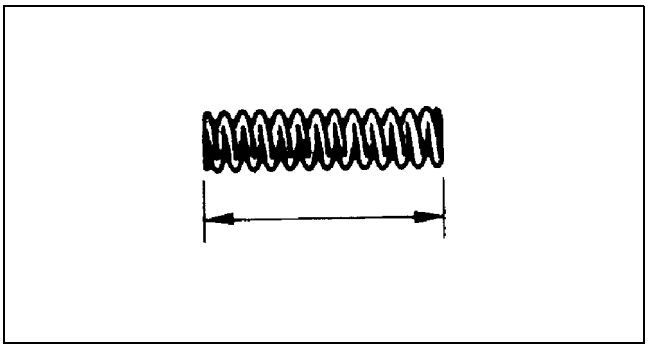

AME2524E057

Rotor Clearance

- Measure the following clearances. Replace the rotor if necessary.

Tooth tip clearance
0.030—0.120 mm {0.0012—0.0047 in}

Maximum tip clearance
0.16 mm {0.006 in}

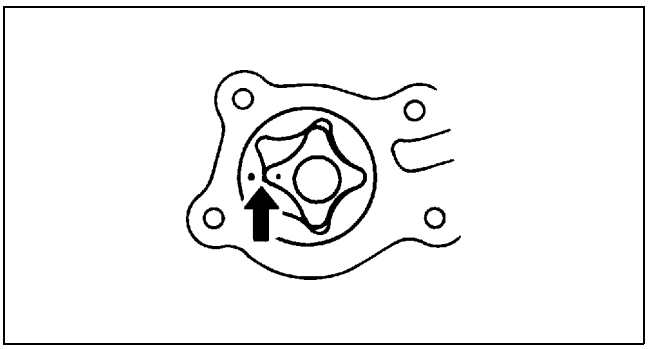

AME2524E058

Outer rotor-to-pump body clearance
0.200—0.294 mm {0.0079—0.0115 in}

Maximum clearance
0.35 mm {0.013 in}

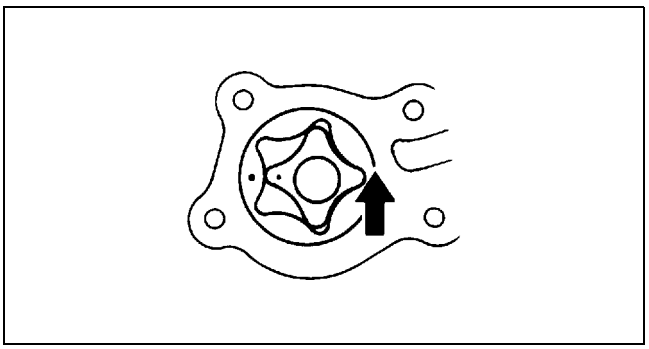

AME2524E059

Side clearance
0.040—0.100 mm {0.0016—0.0039 in}

Maximum clearance
0.15 mm {0.0059 in}

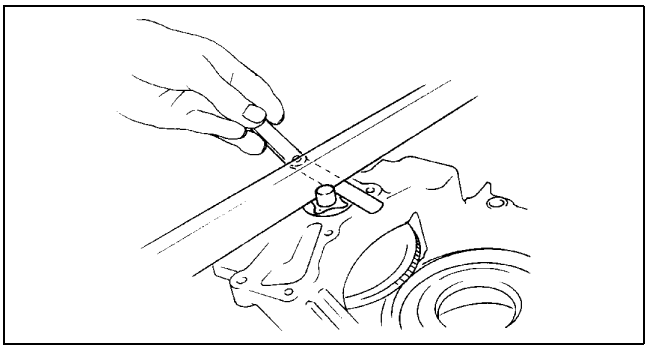

AME2524E060

VALVE CLEARANCE INSPECTION

AME222412111105

1. Remove the cylinder head cover.
2. Turn the crankshaft and align the timing marks so that the piston of the No.1 or No.4 cylinder is at TDC of compression.
3. Measure the valve clearances A with the No.1 cylinder at TDC of compression, and those of B with the No.4 cylinder at TDC of compression.

   Standard valve clearance [Engine cold]
   IN: 0.12—0.18 mm {0.0048—0.0070 in}
   (0.15±0.03 mm {0.0059±0.0012 in})
   EX: 0.32—0.38 mm {0.0126—0.0149 in}
   (0.35±0.03 mm {0.0138±0.0012 in})

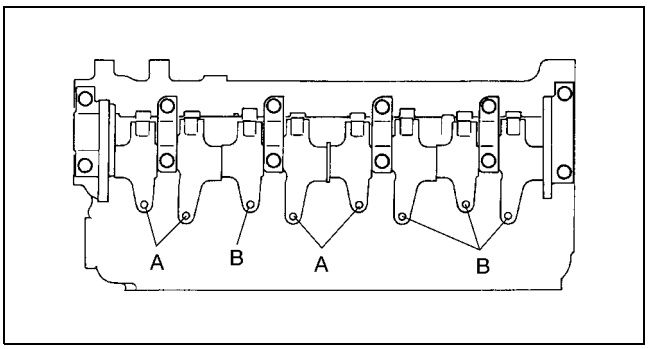

AME2512E001

4. If the valve clearance is not within the specification, adjust the valve clearance. (See B–28 VALVE CLEARANCE ADJUSTMENT)
5. Turn the crankshaft one full turn and measure the remaining valve clearances. Adjust the valve clearance if necessary.

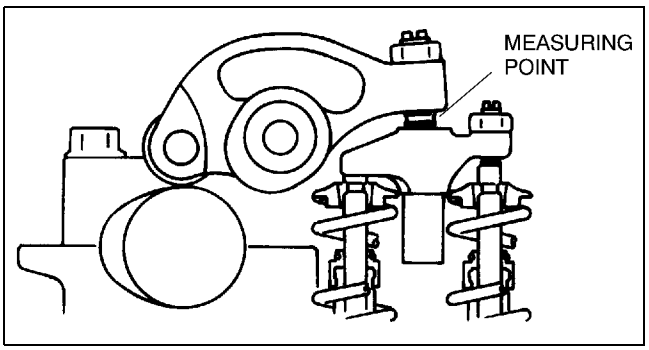

AME2512E002

VALVE CLEARANCE ADJUSTMENT

AME222412111106

1. Remove the injection nozzle bracket.
2. Remove the injection nozzle.

Caution
- **When removing the injection nozzle bracket, always replace the injection nozzle washer. When replacing the injection nozzle washer, wipe off any carbon adhering to the nozzle installation surface of the cylinder head with a clean cloth before installing.**

3. Turn the crankshaft clockwise and set the No.1 cylinder to compression TDC.
4. Adjust the valve clearance A with the No.1 cylinder at TDC of compression, and those of B with the No.4 cylinder at TDC compression.
   (1) Hold the rocker bridge using the **SST** (49 G012 006).

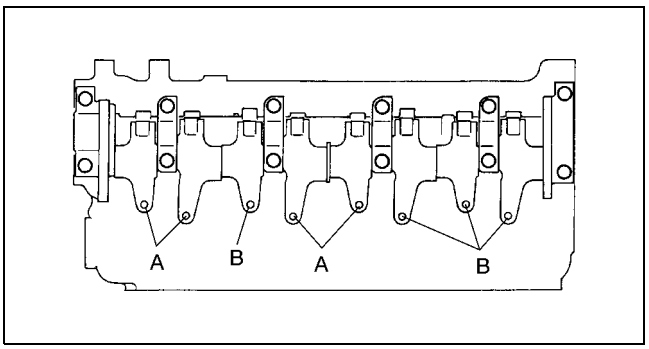

AME2512E001

   (2) Loosen the locknut (d) using the **SST** (49 G012 004), and then turn the adjusting screw (c) using the **SST** (49 G012 005) until it is separated from the valve stem completely.

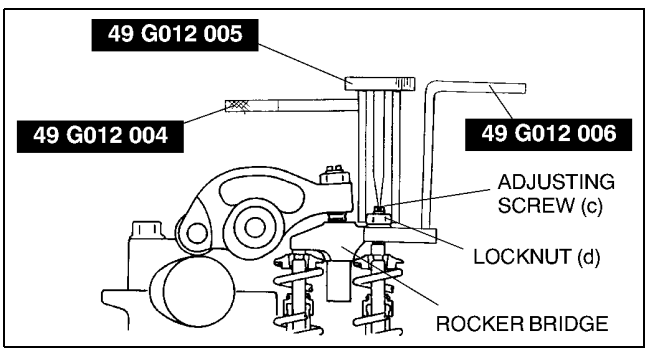

AME2512E003

(3) Loosen the rocker arm locknut (b) using the **SST** (49 G012 004), and then turn the adjusting screw (a) using the **SST** (49 G012 005) until it is separated from the rocker bridge completely.
(4) Insert a feeler gauge between the rocker arm and rocker bridge (e).

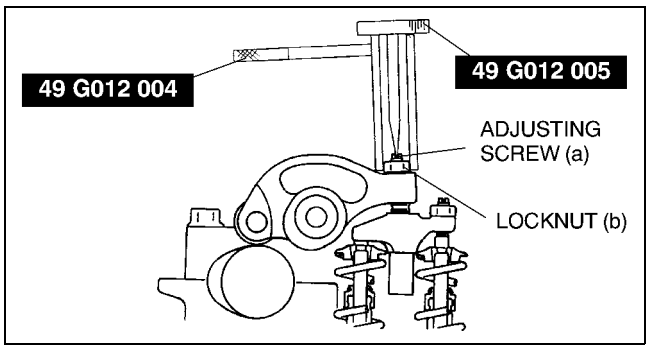

AME2512E004

Standard valve clearance [Engine cold]
IN: 0.12—0.18 mm {0.0048—0.0070 in}
(0.15±0.03 mm {0.0059±0.0012 in})
EX: 0.32—0.38 mm {0.0126—0.0149 in}
(0.35±0.03 mm {0.0138±0.0012 in})

(5) Adjust the valve clearance by turning the adjuster (a) using the **SST** (49 G012 005). Then temporarily tighten locknut (b) using the **SST** (49 G012 004).
(6) With the feeler gauge inserted between the rocker arm end rocker bridge, verify that the feeler gauge remains firmly in place even when the adjusting screw (c) is loosened. If the feeler gauge does not remain firmly in place, repeat procedures from Step 1.
(7) Turn the adjusting screw (c) using the **SST** (49 G012 005) until it reaches the valve stem and the feeler gauge fits more firmly. Then tighten the locknut (d) using the **SST** (49 G012 004) to specified torque.

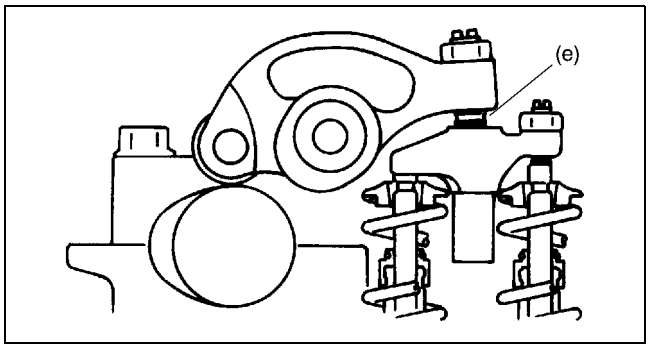

AME2512E005

Tightening torque
16—20 N·m {1.6—2.1 kgf·cm, 12—15 in·lbf}

(8) Loosen the locknut (b) using the **SST** (49 G012 004) and readjust the valve clearance (e).

Standard valve clearance [Engine cold]
IN: 0.12—0.18 mm {0.0048—0.0070 in} (0.15±0.03 mm {0.0059±0.0012 in})
EX: 0.32—0.38 mm {0.0126—0.0149 in} (0.35±0.03 mm {0.0138±0.0012 in})

(9) Tighten the locknut (b) using the **SST** (49 G012 004) to specified torque.

Tightening torque
16—20 N·m {1.6—2.1 kgf·cm, 12—15 in·lbf}

(10)Verify the valve clearance at (e).

Standard valve clearance [Engine cold]
IN: 0.12—0.18 mm {0.0048—0.0070 in} (0.15±0.03 mm {0.0059±0.0012 in})
EX: 0.32—0.38 mm {0.0126—0.0149 in} (0.35±0.03 mm {0.0138±0.0012 in})

5. Turn the crankshaft one full turn and adjust the remaining valve clearances.
6. Install the injection nozzle.
7. Install the injection nozzle bracket.
(See B–41 Injection Nozzle Assembly Note)

CYLINDER BLOCK (I) ASSEMBLY

1. Assemble in the order indicated in the table.

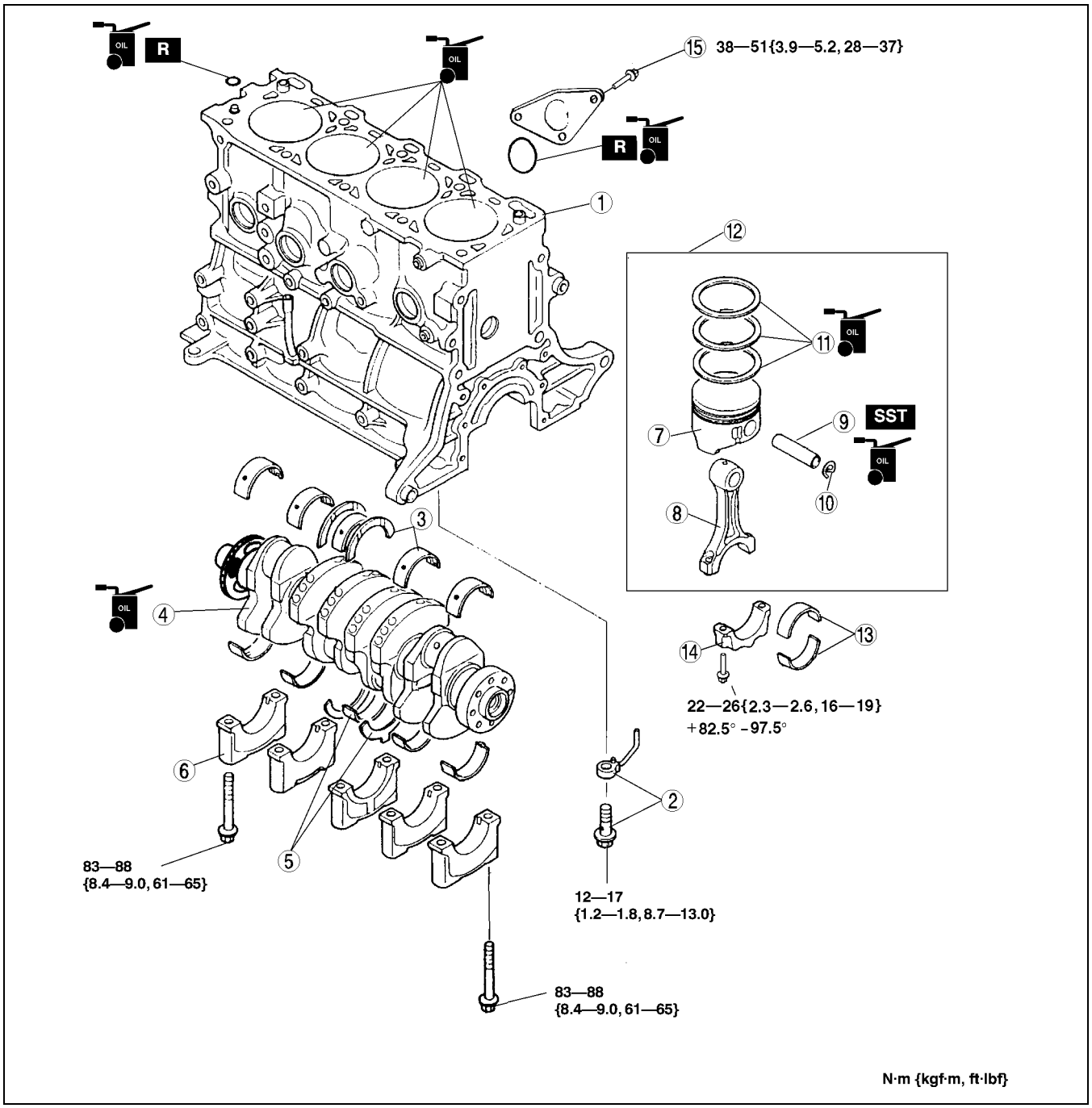

AME2524E075

1	Cylinder block
2	Oil jet
3	Upper main bearing, thrust bearing
4	Crankshaft
5	Lower main bearing, thrust bearing
6	Main bearing cap (See B–31 Main Bearing Cap Assembly Note)
7	Piston (See B–31 Piston Assembly Note)
8	Connecting rod

9	Piston Pin
10	Snap ring
11	Piston ring (See B–31 Piston Ring Assembly Note)
12	Connecting rod, piston (See B–31 Piston Ring Assembly Note)
13	Connecting rod bearing
14	Connecting rod cap (See B–32 Connecting Rod Cap Assembly Note)
15	Cover

Main Bearing Cap Assembly Note

1. Tighten the bolts in the order shown.

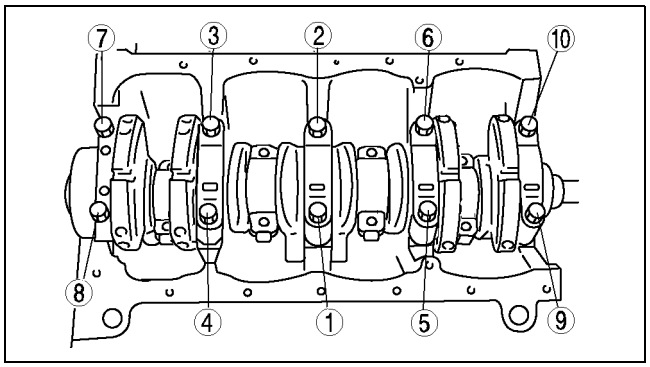

AME2524E067

Piston Assembly Note

1. Assemble the piston and the connecting rod in the direction from which they were disassembled.
2. Apply clean engine oil to the piston pin.
3. Install the piston pin until the pin contacts the clip. If the pin cannot be installed easily, heat the piston.

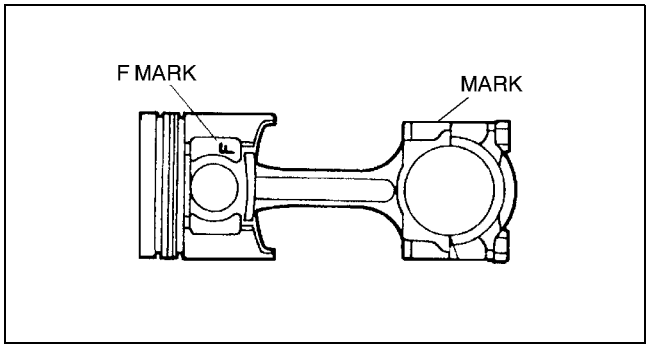

AME2524E036

Piston Ring Assembly Note

1. Install the first and second rings as shown.

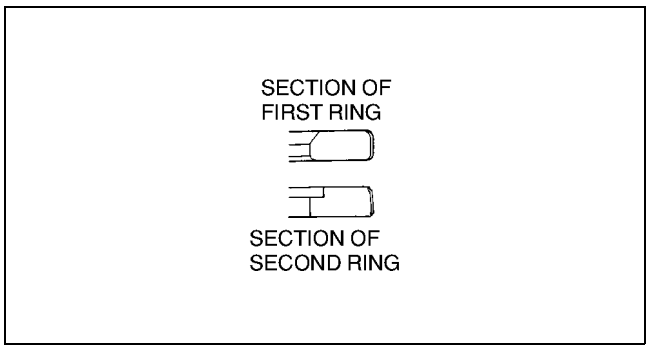

AME2524E037

Connecting Rod, Piston Assembly Note

1. Insert the piston and connecting rod into the cylinder with the F mark facing the front of the engine.

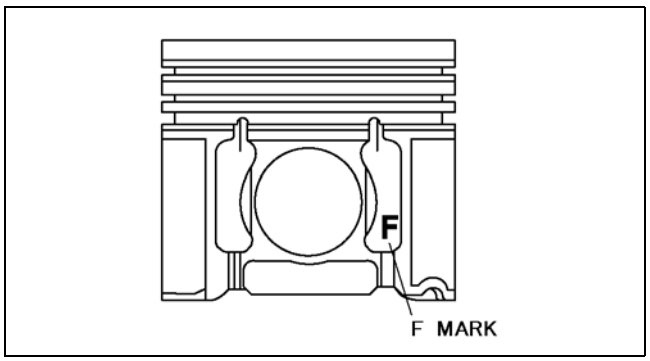

AME2524E062

Connecting Rod Cap Assembly Note

1. Install the connecting rod caps with the knock pins aligned.

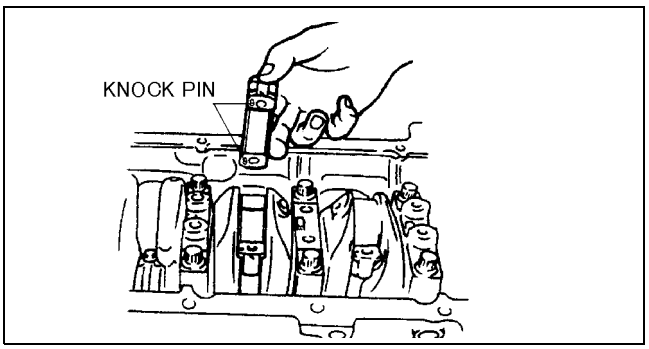

AME2524E061

CYLINDER BLOCK (II) ASSEMBLY

1. Assemble in the order indicated in the table.

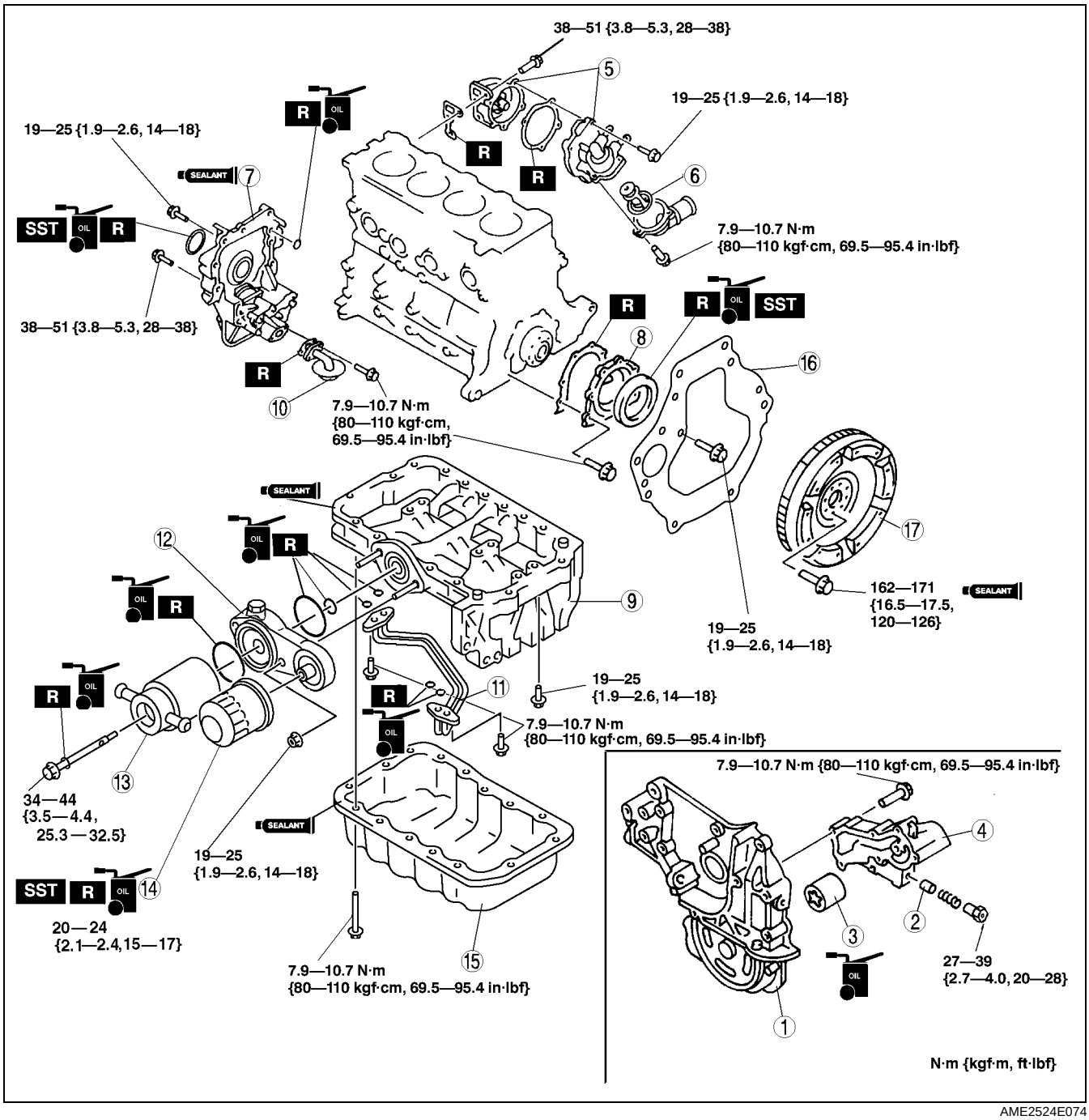

AME2524E074

1	Oil pump body
2	Relief valve
3	Outer rotor
4	Oil pump cover (See B–33 Oil Pump Cover Assembly Note)
5	Water Pump
6	Thermostat (See B–33 Thermostat Assembly Note)
7	Oil pump (See B–34 Oil Pump Assembly Note)
8	Rear cover (See B–35 Rear Cover Assembly Note)
9	Oil pan upper block (See B–35 Oil Pan Upper Block Assembly Note)
10	Oil Strainer
11	Oil pipe
12	Oil filter body
13	Oil cooler
14	Oil filter
15	Oil pan (See B–36 Oil Pan Assembly Note)
16	End plate
17	Flywheel (See B–36 Flywheel Assembly Note)

Oil Pump Cover Assembly Note

1. Install the oil pump cover in the order shown.
2. Verify that the oil pump rotates smoothly when turned driven gear by hand.

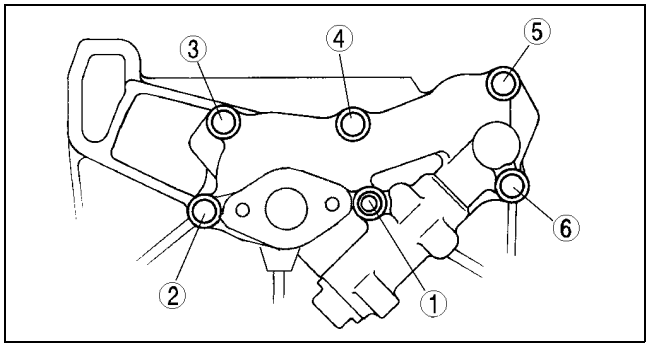

AME2524E026

Thermostat Assembly Note

1. Verity that the jiggle pin is aligned with the projection of the thermostat gasket as shown.
2. Install the thermostat and gasket into the thermostat cover, aligning the projection with the cover as shown.

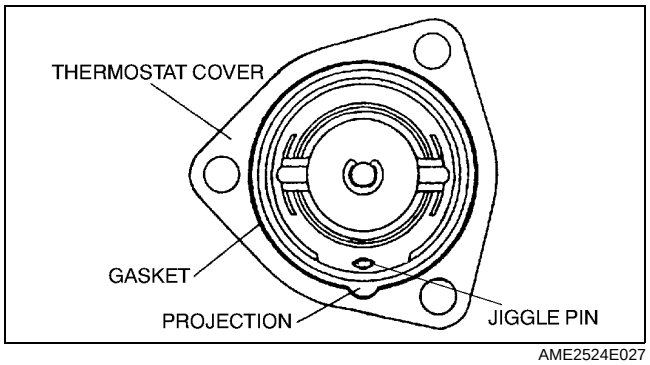

AME2524E027

Oil Pump Assembly Note

1. Apply clean engine oil to the oil seal.
2. Push the oil seal slightly in by hand.
3. Set the oil pump and **SSTs**.

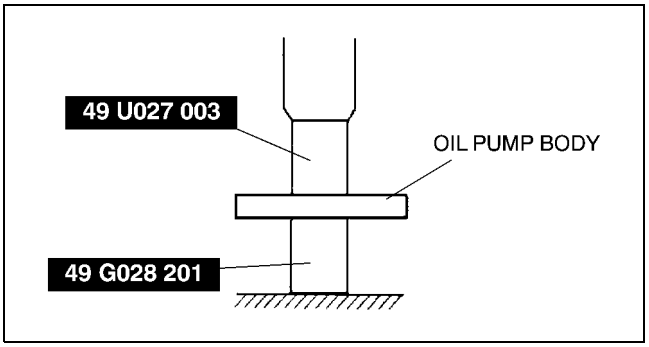

AME2524E028

4. Press the oil seal in evenly using the **SST**.

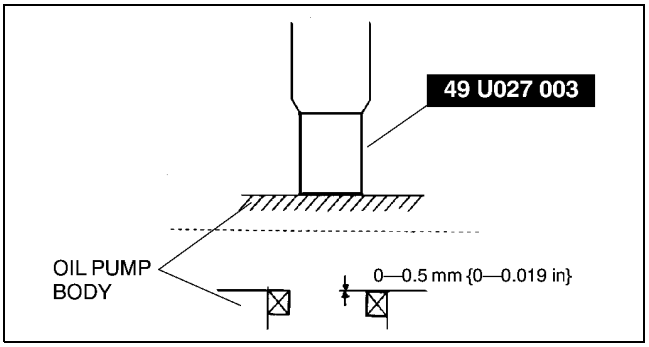

AME2524E029

5. Apply silicone sealant to the oil pump housing continuously as shown.

   Thickness
   1.0—2.0 mm {0.040—0.078 in}

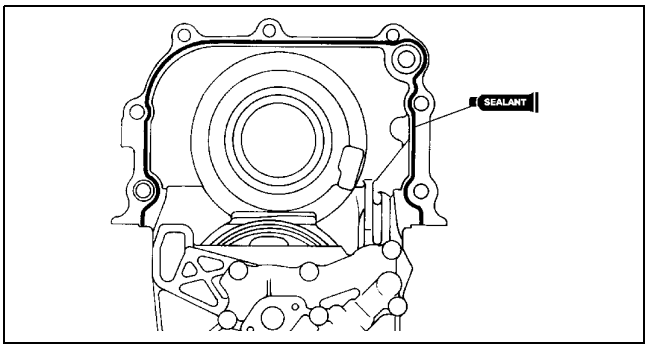

AME2524E030

6. Install the oil pump.

   Tightening torque
   A: 19—25 N·m {1.9—2.6 kgf·m, 14—l8 ft·lbf}
   B: 38—51 N·m {3.8—5.3 kgf·m, 2—38 ft·lbf}

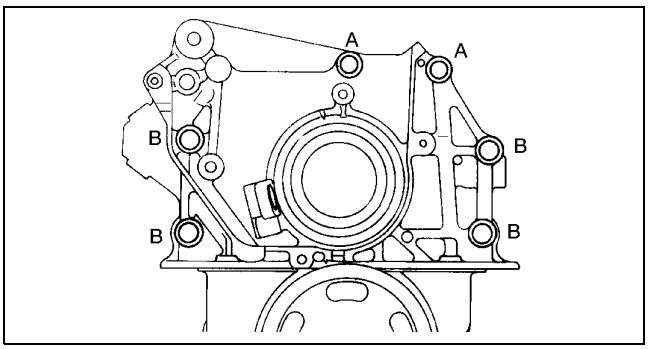

AME2524E031

Oil Pan Upper Block Assembly Note

1. Apply silicone sealant to the oil pan upper block as shown.

   Thickness
   2.0—3.0 mm {0.08—0.11 in}

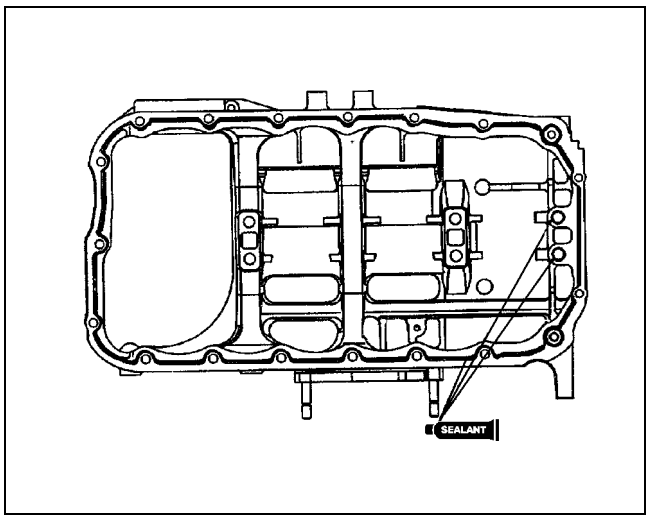

AME2524E077

2. Tighten the oil pan upper block bolts in two or three steps in the order shown.

Bolt No.	Tightening Torque
1—6	**19—25 N·m {1.9—2.6 kgf·m, 14—18 ft·lbf}**
7—13	**7.9—10.7 N·m {80—110 kgf·cm, 69.5—95.4 in·lbf}**

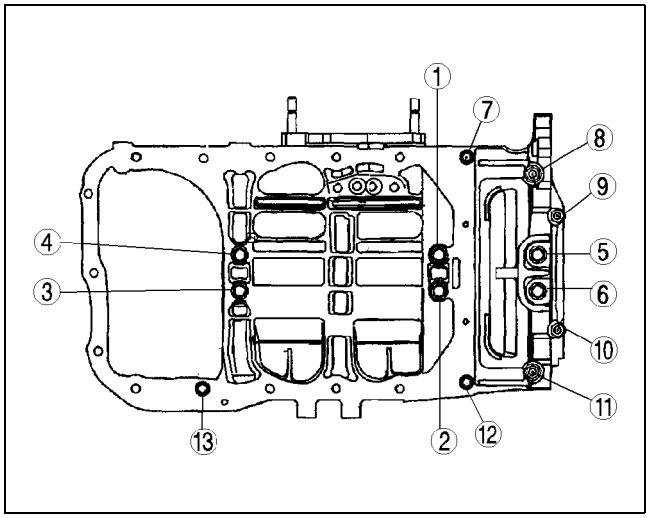

AME2524E079

Rear Cover Assembly Note

1. Apply clean engine oil to the oil seal.
2. Push the oil seal slightly in by hand.
3. Press the oil seal in evenly using the **SSTs**.

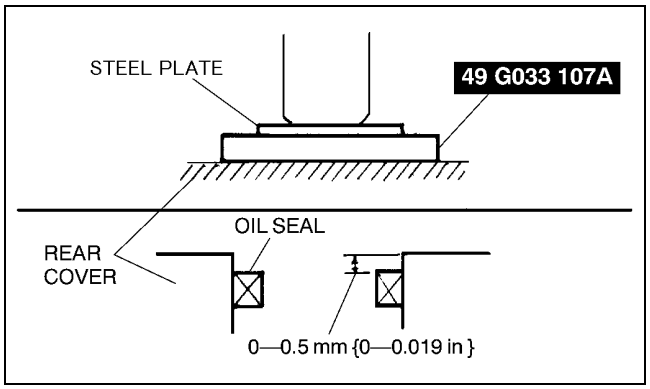

AME2524E032

Oil Pan Assembly Note

Caution
- **If the bolts are reused, remove the old sealant from the bolt threads. Tightening a bolt that has old sealant on it can cause bolt hole damage.**

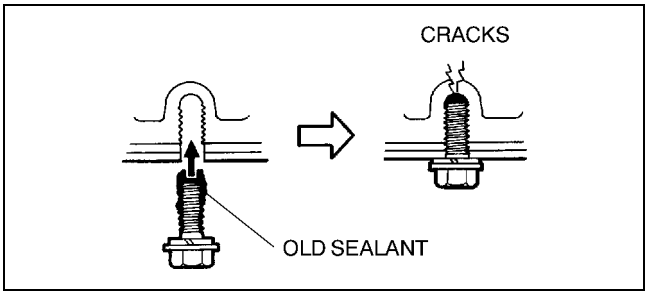

AME2524E033

1. Apply silicone sealant to the oil pan along the inside of the bolt holes and overlap the ends.

   Thickness
   2.5—3.5 mm {0.099—0.137 in}

2. Install the oil pan.
3. Hand tighten the flangeless bolts and tighten the flanged bolts.

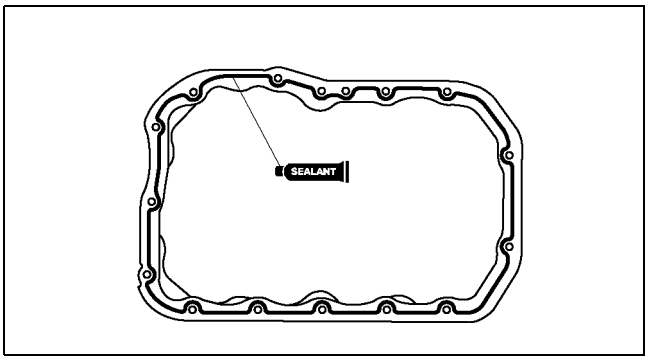

AME2524E063

Flywheel Assembly Note
1. Hold the flywheel using the **SST**.
2. When reusing the bolts, clean and apply sealant to the threads.

Note
- No sealant is needed when new bolts are use.

3. Tighten the bolts in two or three steps in the order shown.

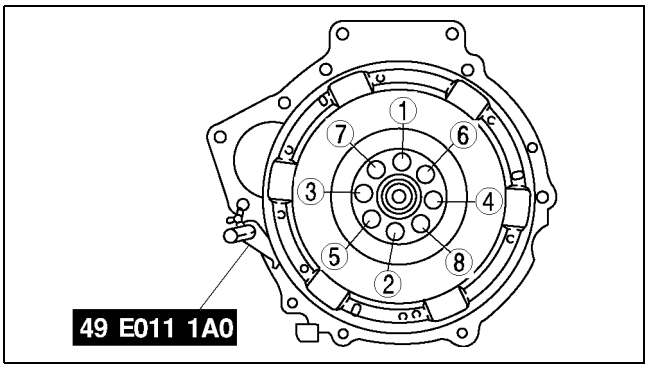

AME2524E072

CYLINDER HEAD (I) ASSEMBLY

1. Assemble in the order indicated in the table.

1	Valve Seal (See B–37 Valve Seal Assembly Note)
2	Valve
3	Lower valve spring seat
4	Valve spring
5	Upper valve spring seat
6	Valve keeper (See B–38 Valve Keeper Assembly Note)
7	Cylinder head gasket
8	Cylinder head (See B–38 Cylinder Head Assembly Note)
9	Engine coolant temperature sensor
10	Glow plug, Grow Plug Lead (See B–38 Glow Plug, Glow Plug Lead Assembly Note)

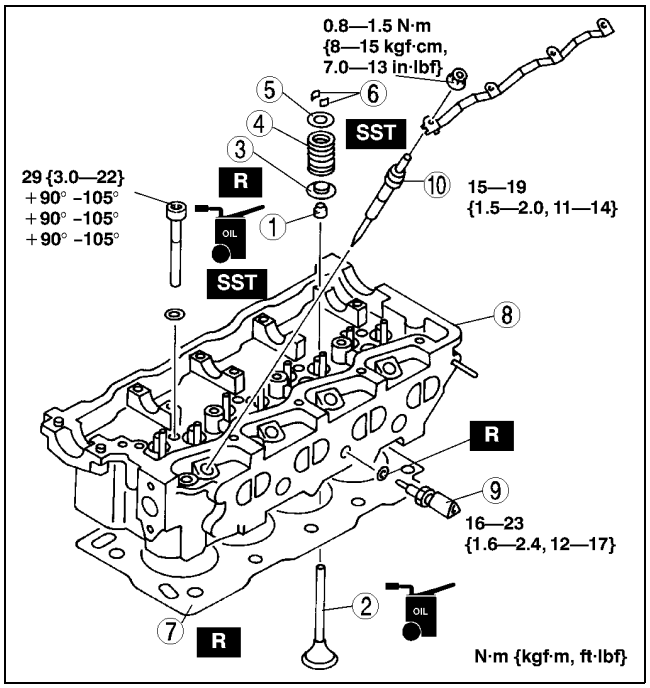

AME2524E073

Valve Seal Assembly Note

1. Assemble the **SSTs** so that depth L is as specified.
2. Press the valve seal onto the valve guide by hand.

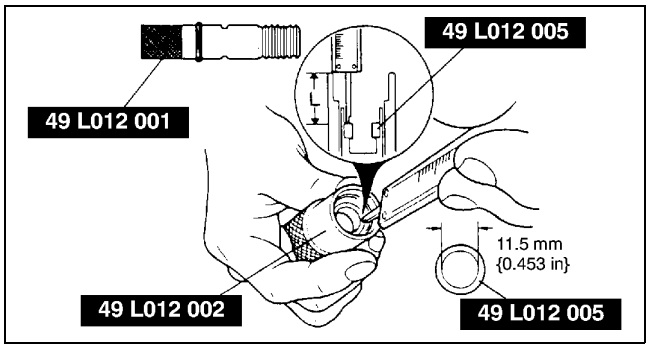

AME2511E003

3. Tap the **SSTs** using a plastic hammer until its lower end touches the cylinder head.

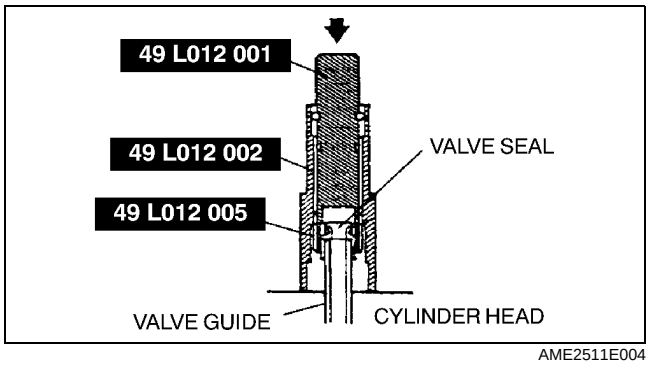

AME2511E004

Valve Keeper Assembly Note

1. Install the valve keeper using the **SSTs**.

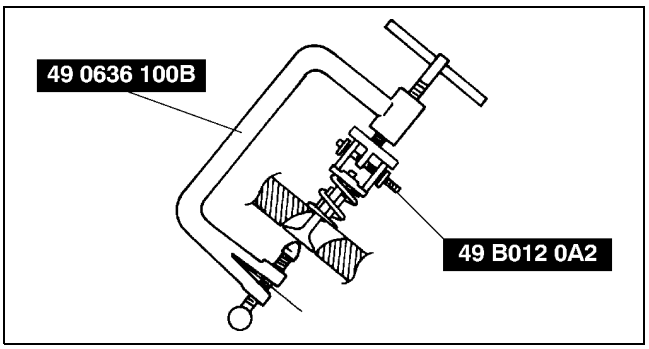

AME2511E001

Cylinder Head Assembly Note

1. Tighten the bolts in two or three steps in the order shown.

   Tightening torque
   29 N·m {3.0 kgf·m, 22 ft·lbf}

2. Put a paint mark on each bolt head.
3. Using the marks as a reference, tighten the bolts by turning each **90°—105°** in the sequence shown.
4. Further tighten each bolt by turning another **90°—105°**.

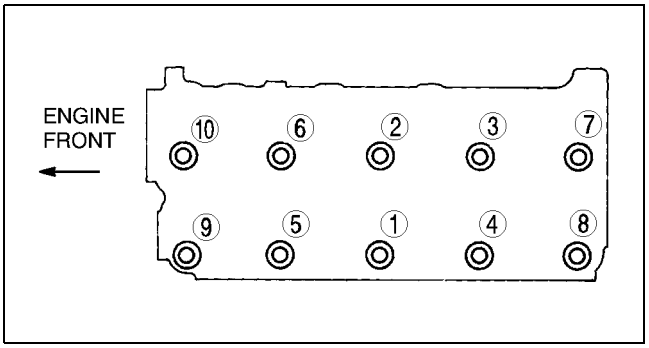

AME2524E021

5. Further tighten each bolt by turning another **90°—105°**.

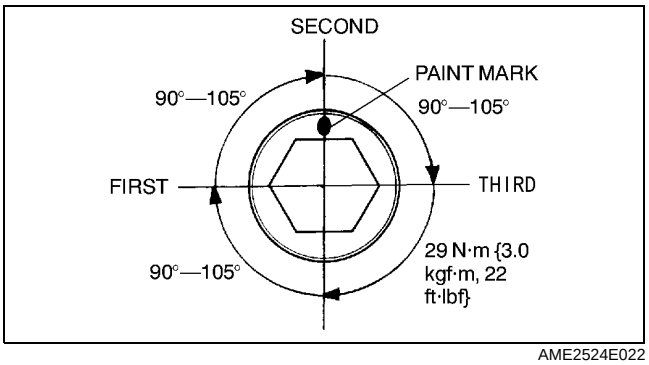

AME2524E022

Glow Plug, Glow Plug Lead Assembly Note

Caution

- **Damaging heat-generating part of the plug can cause the plug to blow out. Do not use the plug if it is dropped from a height over 10 cm {3.9 in}.**
- **When installing the glow plug, tighten it one or more threads by hand, then further tighten using tool.**

CYLINDER HEAD (II) ASSEMBLY

1. Assemble in the order indicated in the table.

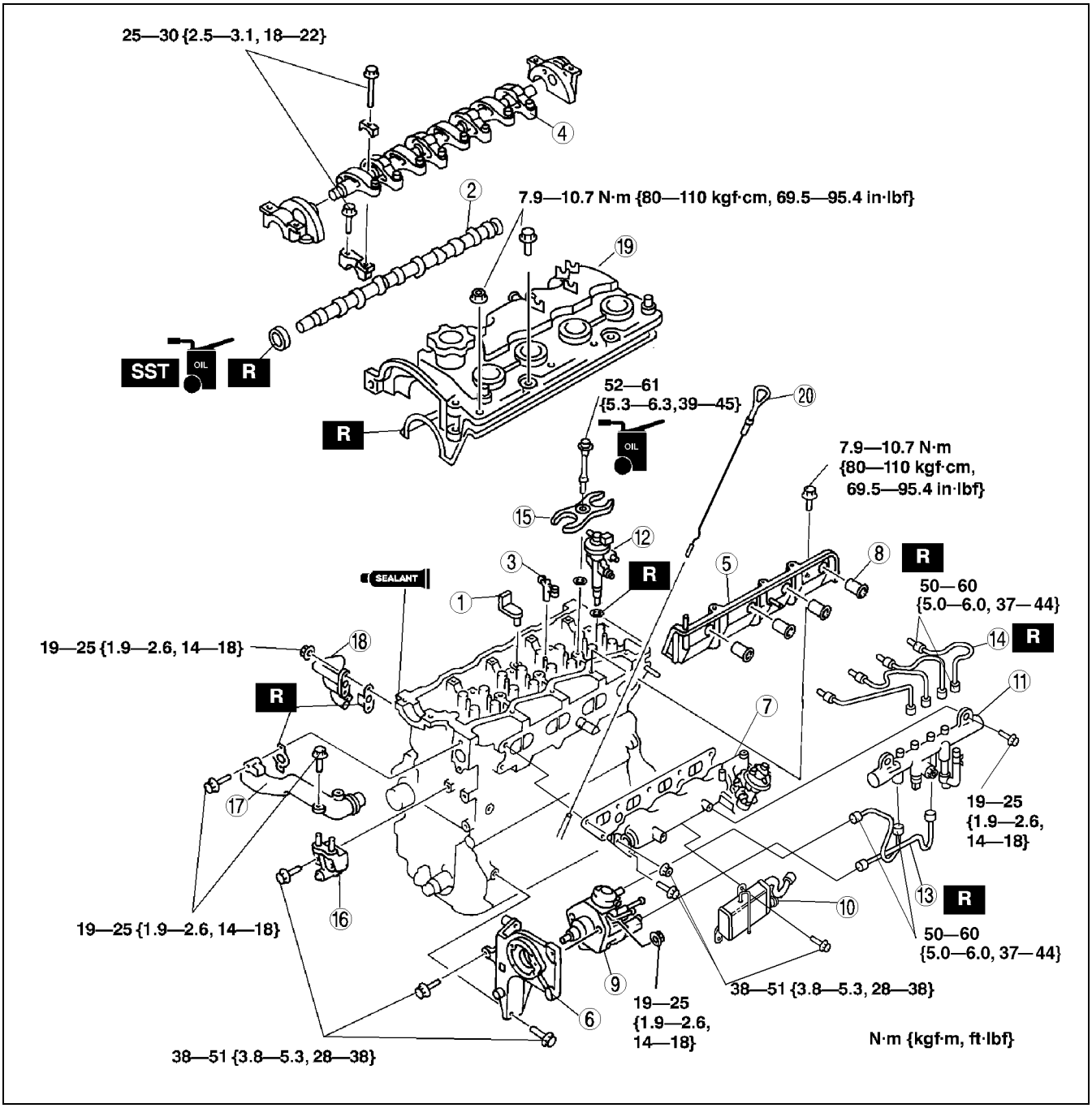

AME2524E023

1	Breather pipe
2	Camshaft
3	Rocker bridge
4	Rocker arm and rocker arm shaft (See B–40 Rocker Arm and Rocker Arm Shaft Assembly Note)
5	Side wall
6	Injection pump bracket (See B–41 Injection Pump Bracket Assembly Note)
7	Intake manifold (See B–41 Intake Manifold Assembly Note)
8	Nozzle seal
9	Injection pump
10	EGR water cooler

11	Common rail
12	Injection nozzle (See B–41 Injection Nozzle Assembly Note)
13	Fuel injection pipe
14	Fuel injection pipe
15	Injection nozzle bracket
16	No. 3 engine mount bracket
17	Water outlet (See B–42 Water Outlet Assembly Note)
18	Bypass pipe
19	Cylinder head cover (See B–42 Cylinder Head Cover Assembly Note)
20	Dipstick

Rocker Arm and Rocker Arm Shaft Assembly Note

1. Apply sealant as shown in the figure.

   Thickness
   2.0 mm {0.079 in} min.

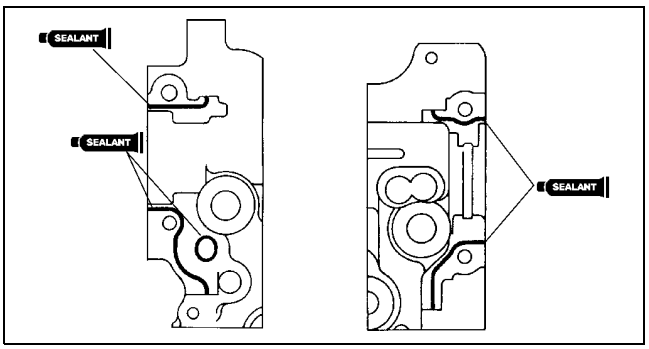

AME2521E002

2. Install the camshaft caps according to the cap number.

3. Install the rocker arm shaft plane side upward.

   Caution
   - **Because there is little camshaft thrust clearance, the camshaft must be held horizontally while it is installed. Otherwise, excessive force will be applied to the thrust area, causing burr on the thrust receiving area of the cylinder head journal. To avoid this, the following procedure must be observed.**

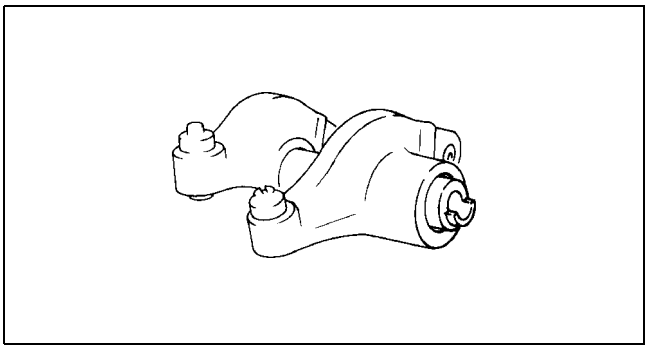
AME2521E003

4. Tighten the bolts in two or three steps in the order shown.
5. Apply clean engine oil to the new oil seal.
6. Push the oil seal slightly in by hand.

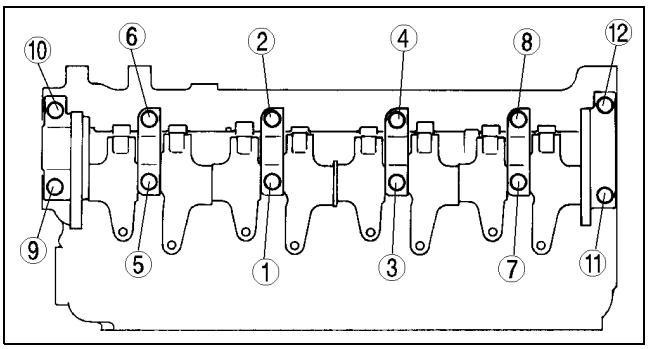

AME2521E004

7. Tap the oil seal into the cylinder head using the **SST** and a hammer.

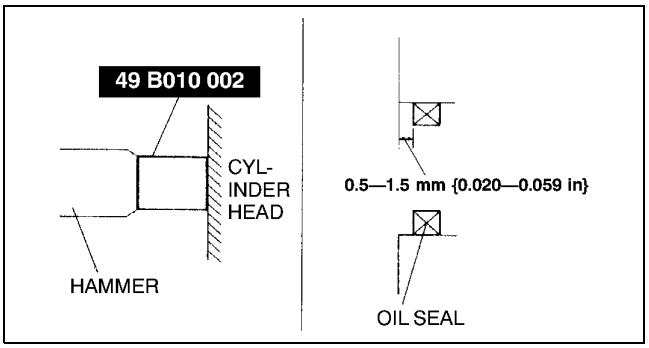

AME2524E015

Side Wall Assembly Note

1. Apply silicone sealant as shown in the figure.

   Thickness
   2.0 mm {0.079 in} min.

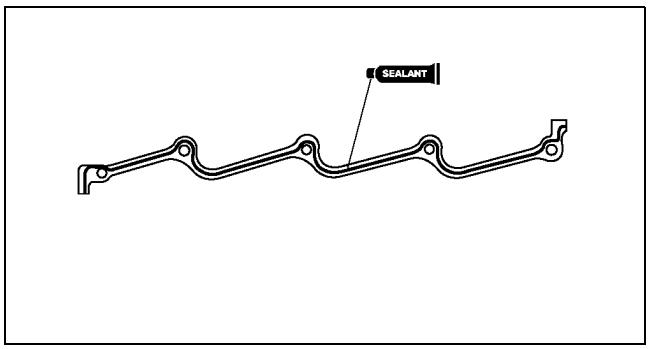

AME2524E069

Injection Pump Bracket Assembly Note

1. Tighten the bolts in the order shown.

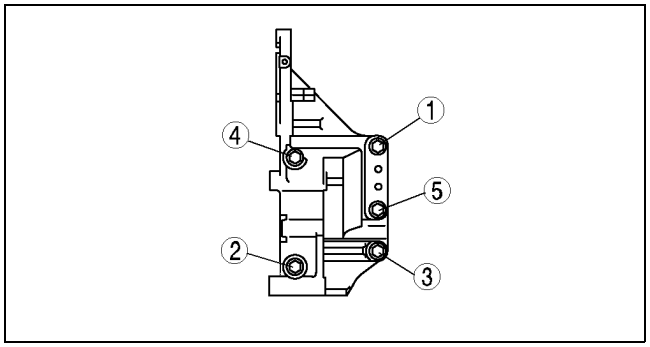

AME2524E070

Intake Manifold Assembly Note

- Tighten from centre to outwards.

Injection Nozzle Assembly Note

1. Temporarily tighten the injection nozzle bracket.

   Tightening torque
   10—20 N·m {1.0—2.0 kgf·m, 8—l4 ft·lbf}

2. Temporarily tighten the common rail.
3. Temporarily tighten the injection pipes.
4. Fully tighten the injector side injection pipes, then tighten the common rail side.

   Tightening torque
   50—60 N·m {5.0—6.0 kgf·m, 37—44 ft·lbf}

5. Fully tighten the injection pump side and common rail side injection pipes.

   Tightening torque
   50—60 N·m {5.0—6.0 kgf·m, 37—44 ft·lbf}

6. Fully tighten the injection nozzle bracket.

   Tightening torque
   52—61 N·m {5.3—6.3 kgf·m, 39—45 ft·lbf}

7. Fully tighten the common rail.

   Tightening torque
   19—25 N·m {1.9—2.6 kgf·m, 14—18 ft·lbf}

Cylinder Head Cover Assembly Note

1. Apply silicone sealant to the shaded areas.

   Thickness
   2.0 mm {0.079 in} min.

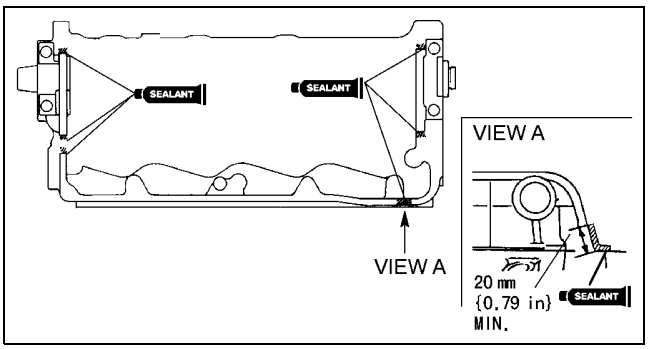

AME2524E017

2. Tighten the bolts in the order shown.

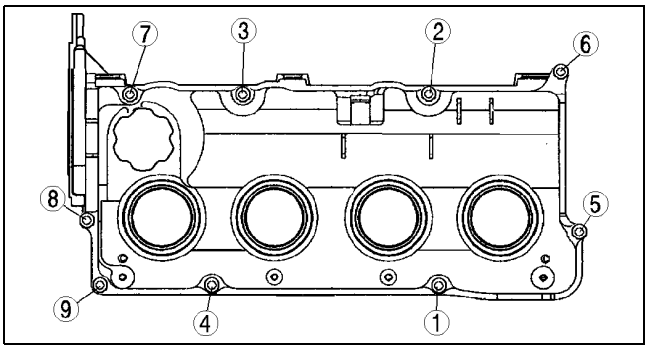

AME2524E777

Water Outlet Assembly Note

1. Tighten the bolts in the order shown.

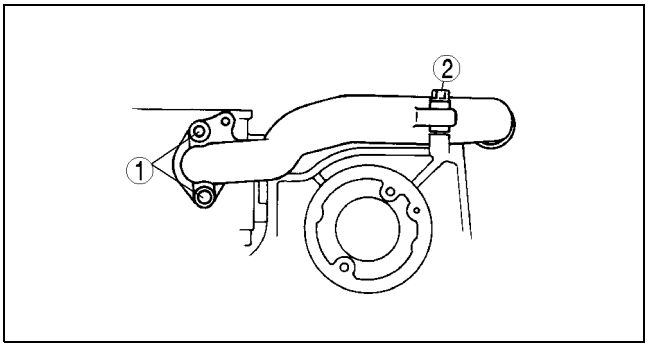

AME2524E018

TIMING BELT ASSEMBLY

1. Assemble in the order indicated in the table.

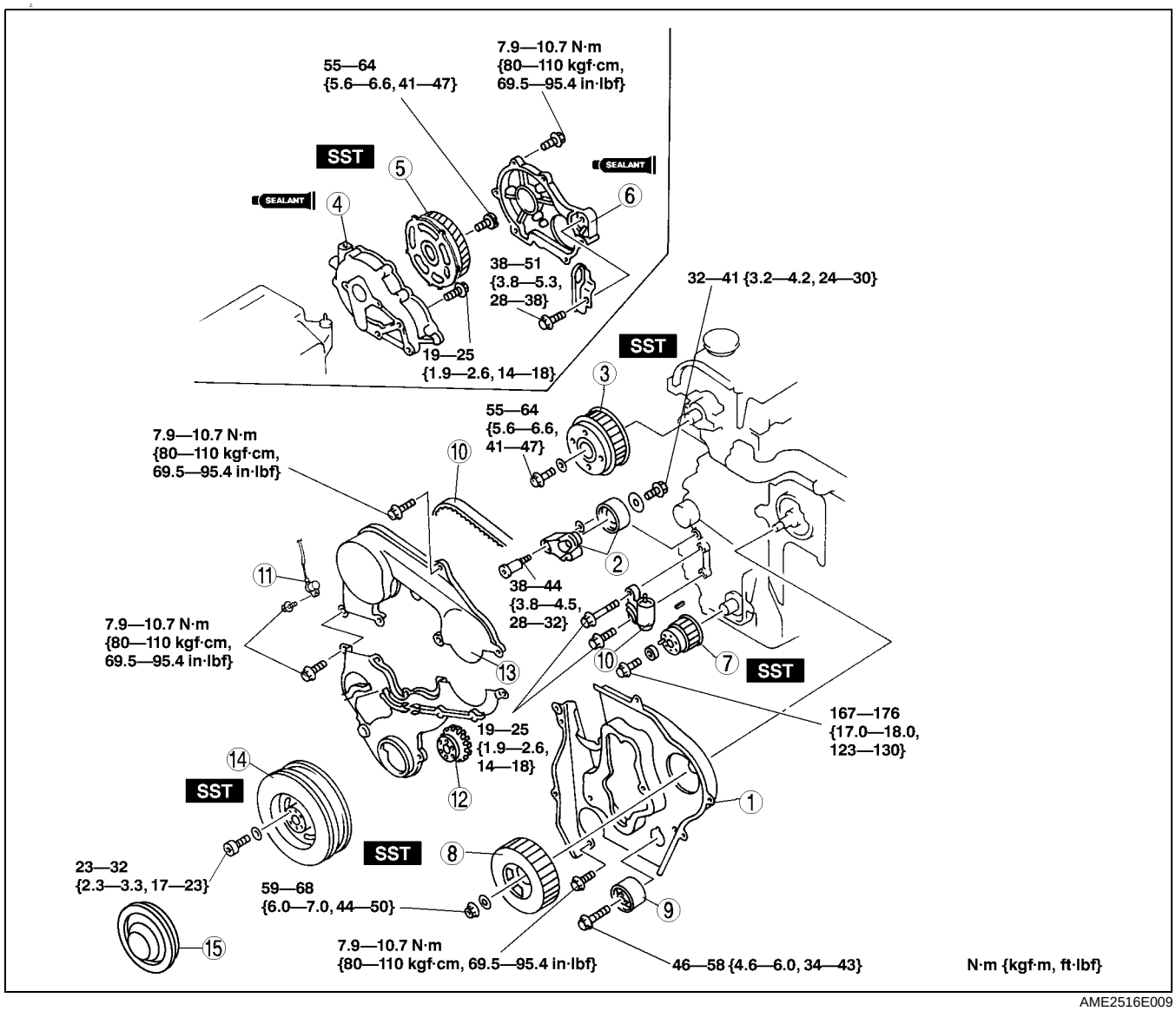

AME2516E009

1	Seal plate (See B–44 Seal Plate Assembly Note)
2	Tensioner
3	Camshaft pulley (See B–44 Camshaft Pulley Assembly Note)
4	Gear case (See B–44 Gear Case Assembly Note)
5	Drive gear (See B–44 Drive Gear Assembly Note)
6	Gear cover (See B–45 Gear Cover Assembly Note)
7	Timing belt pulley (See B–45 Timing Belt Pulley Assembly Note)

8	Injection pump pulley (See B–45 Injection Pump Pulley Assembly Note)
9	Idler (See B–46 Idler Assembly Note)
10	Timing belt, timing belt auto tensioner (See B–46 Timing Belt, Timing Belt Auto Tensioner Assembly Note)
11	Crankshaft position sensor
12	Guide plate
13	Timing belt cover
14	Crankshaft pulley (See B–48 Crankshaft Pulley Assembly Note)
15	Pulley cover

Seal Plate Assembly Note

1. Install the seal plate and hand tighten the bolts in the order A to B.
2. Tighten the bolts in the order shown.

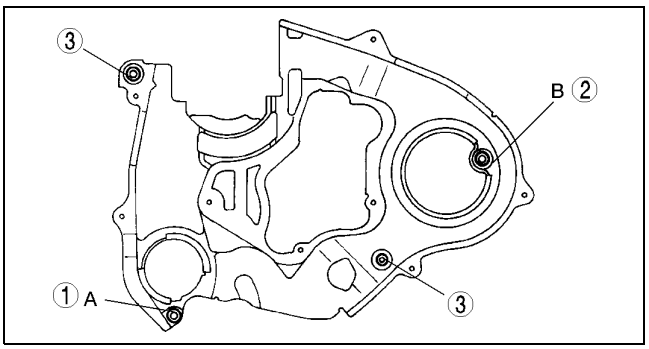

AME2516E004

Camshaft Pulley Assembly Note

1. Hold the camshaft using the **SST**.

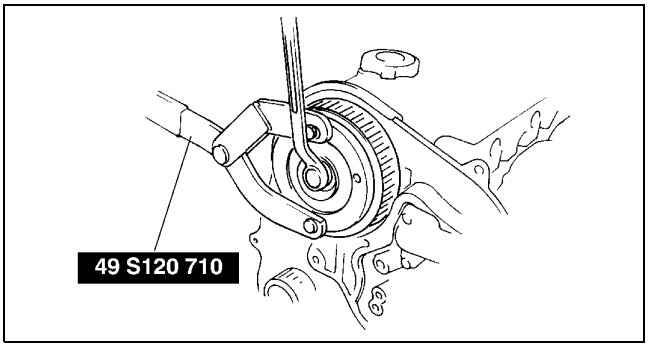

AME2524E009

Gear Case Assembly Note

1. Apply silicone sealant as shown in the figure.

   Thickness
   1.5—2.5 mm {0.059—1.098 in}

2. Tighten the bolts in clockwise order.

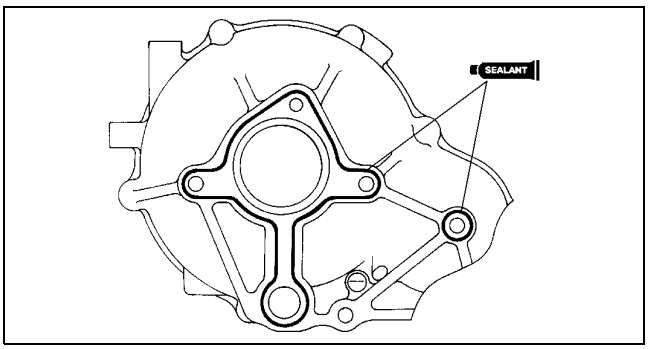

AME2524E011

Drive Gear Assembly Note

1. Hold the camshaft using the **SST**.
2. Remove the drive gear lock bolt.

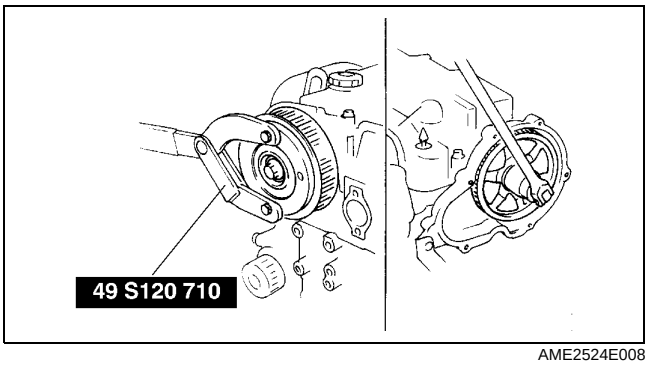

AME2524E008

Gear Cover Assembly Note

1. Apply silicone sealant as shown in the figure.

   Thickness
   1.5—2.5 mm {0.059—1.098 in}

2. Tighten the bolts in clockwise order.

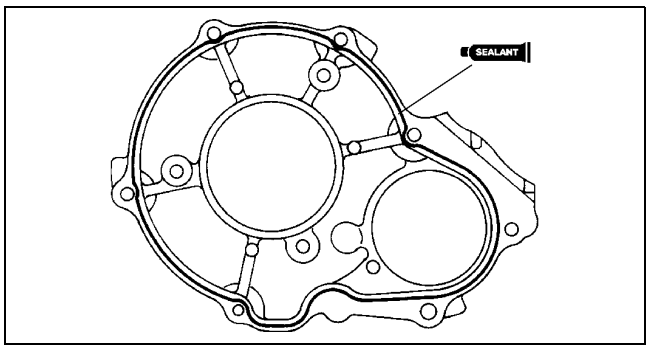

AME2524E012

Timing Belt Pulley Assembly Note

1. Hold the crankshaft using the **SST**.
2. Tighten the timing belt pulley lock bolt.

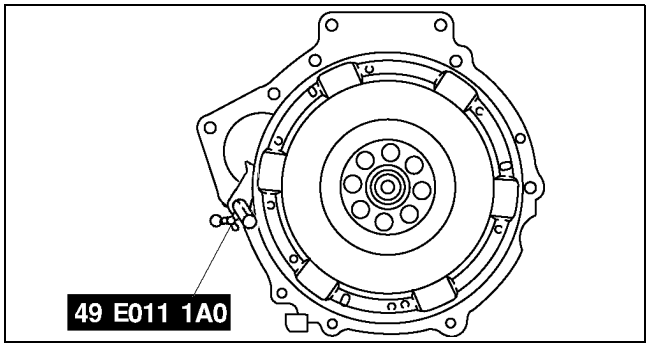

AME2524E065

Injection Pump Pulley Assembly Note

Caution

- **To prevent the bolts (M8 x 1.25) from damaging the injection pump and pulley, do not fully tighten the detent bolt. If it contacts the pulley surface, it will damage the pulley.**

1. Fix the injection pump pulley to the bracket using two bolts (M8 x 1.25).

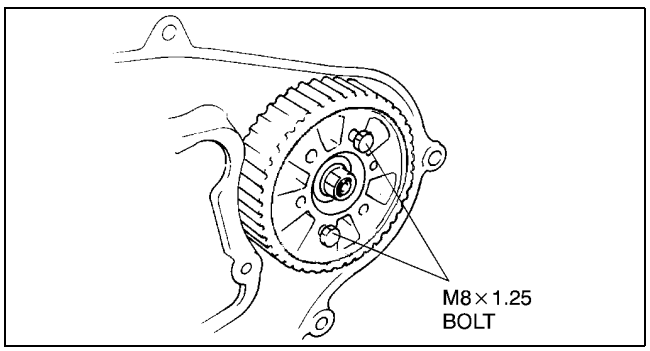

AME2524E005

Idler Assembly Note

Caution
- **The idler has a front and back relative to the engine, therefore when installing make sure that the longer projection of the shaft is on the engine side as indicated in the figure.**

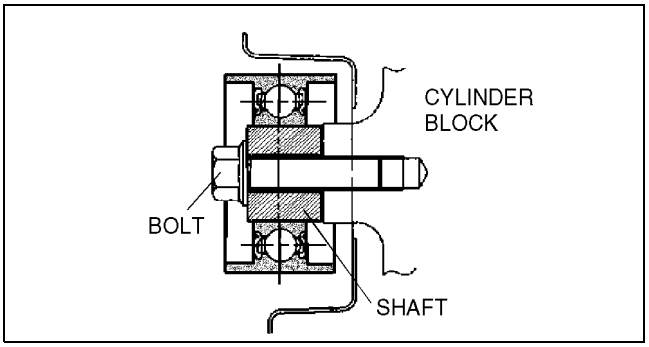

AME2524E099

Timing Belt, Timing Belt Auto Tensioner Assembly Note

Caution
- **Placing the auto tensioner horizontally can cause oil leakage and damage the auto tensioner. Place the auto tensioner vertically when using a vise.**

1. Verify the thrust of the auto tensioner rod in the following order:
   (1) If the tensioner rod is rigid when it is pushed with a force of approximately 235 N {24 kgf, 53 lbf}, push it down slowly and fix the pin in the hole.
   (2) If there is no resistance on the tensioner rod and it moves slightly when it is pushed with a force of approximately **235 N {24 kgf, 53 lbf}**;

Caution
- **To prevent damage to the inside of the auto tensioner, do not press down the auto tensioner rod with a force greater than the specified 235 N {24 kgf, 53 lbf}. Be careful that the rod does not touch the bottom.**

1) Push it down slowly two or three times to the bottom end of the rod.
2) If the rod protrudes approximately 8.1 mm {0.32 in}, verify that there is resistance on the tensioner rod.
- If the resistance is restored, push it down slowly and fix the pin in the hole. If the resistance is not restored, replace the auto tensioner.

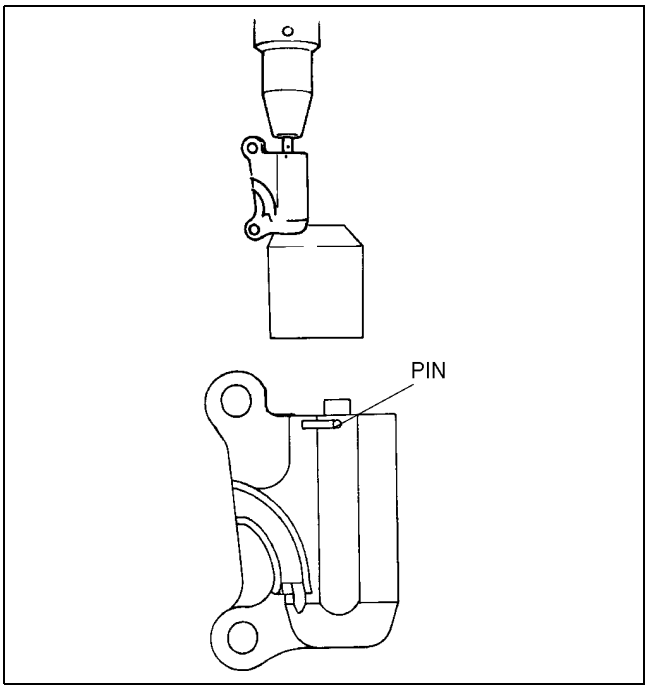

AME2516E005

Caution
- **To prevent the bolts (M8 x 1.25) from damaging the injection pump and pulley, do not fully tighten the detent bolt. If it contacts the pulley surface, it will damage the pulley.**

2. Verify that all timing marks are correctly aligned.
3. Fix the camshaft pulley to the cylinder head using bolt (M8 x 1.25).

4. Fix the injection pump pulley to the bracket using two bolts (M8 x 1.25).
5. If not, align all timing marks according to the following procedure.

Caution

- **Turn the crankshaft in the direction which will prevent the TDC and BDC from being passed. Otherwise it can cause the valve and piston to contact.**

(1) Turn the crankshaft and set it an angle of 45° or more away from the TDC and BDC.
(2) Align the timing marks of the camshaft pulley.
(3) Align the timing marks of the injection pump pulley.
(4) Turn the crankshaft and align the timing marks of the timing belt pulley.

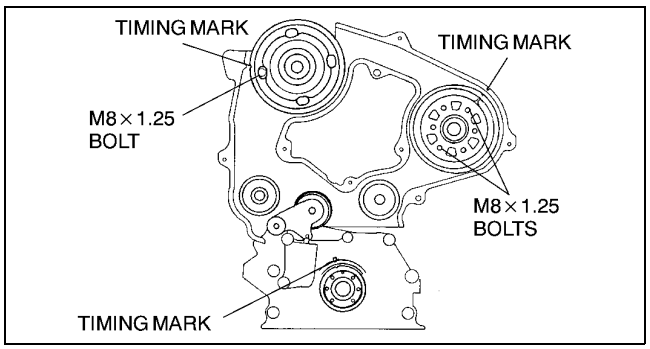

AME2516E006

6. Install the timing belt on the pulleys in the following order.
(1) Timing belt pulley
(2) Idler
(3) Injection pump pulley
(4) Camshaft pulley
(5) Water pump pulley
(6) Tensioner
7. Remove the injection pump pulley fixing bolts and camshaft pulley fixing bolt (M8 x 1.25).
8. Hand–tighten the auto tensioner bolts in the order A to B.

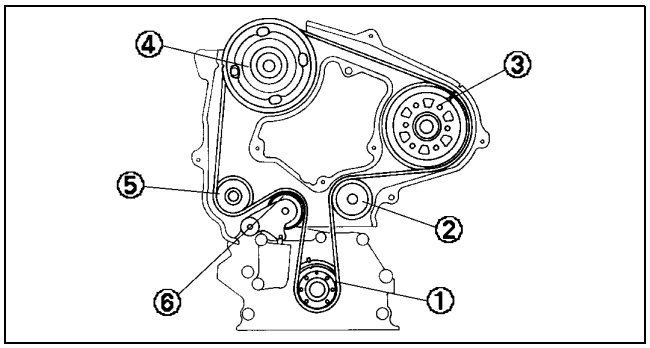

AME2516E007

9. Tighten the auto tensioner bolts in the order A to B.
10. Remove the pin from the auto tensioner to apply tension to the belt.
11. Turn the crankshaft clockwise twice, and align the timing marks.
12. Verify that all timing marks are correctly aligned. If not, repeat from **Timing Belt, Timing Belt Auto Tensioner Removal Note**.

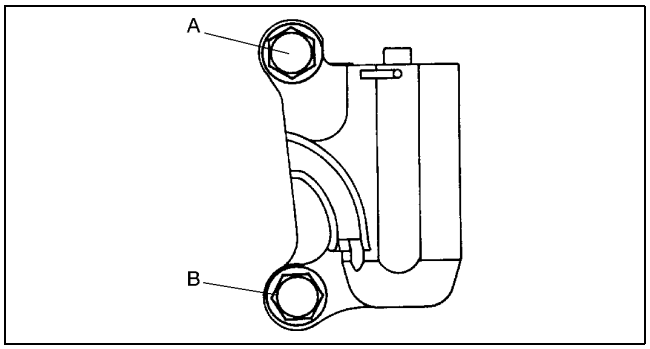

AME2516E008

Crankshaft Pulley Assembly Note

1. Hold the crankshaft using the **SST**.

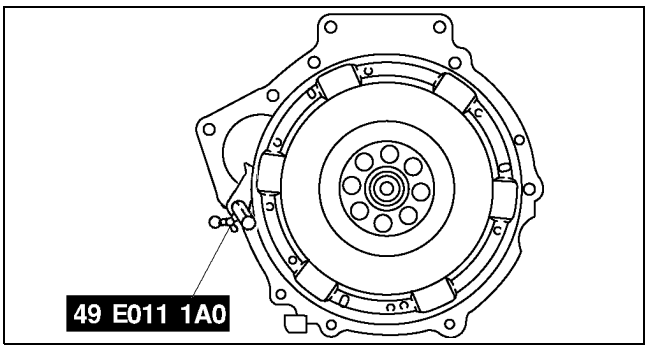

AME2524E065

2. Tighten the bolts in the order shown.

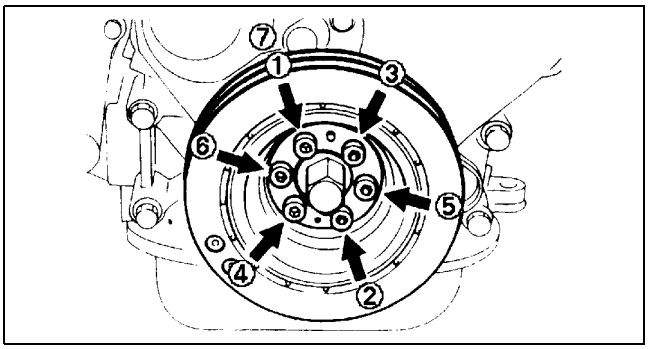

AME2524E013

TECHNICAL DATA

TECHNICAL DATA TD-2
ENGINE TD-2

TECHNICAL DATA

ENGINE

AME931001001101

Item			Specification
Cylinder head			
Valve clearance [Engine cold] (mm {in})		IN	0.12—0.18 {0.0048—0.0070} (0.15 ± 0.03 {0.0059 ± 0.0012})
		EX	0.32—0.38 {0.0126—0.0149} (0.35 ± 0.03 {0.0138 ± 0.0012})
Cylinder head gasket contact surfaces distortion (mm {in})		Maximum	X direction:0.01 {0.0004} Y direction:0.04 {0.0016}
Manifold contact surfaces direction (mm {in})		Maximum	0.06 {0.0024}
		Maximum grinding	0.20 {0.008}
Valve and valve guide			
Margin thickness (mm {in})		IN	0.8 {0.0315}
		EX	1.0 {0.0394}
Valve length (mm{in})	IN	Standard	115.01—115.51 {4.528—4.547}
		Minimum	114.785 {4.519}
	EX	Standard	114.35—114.85 {4.502—4.521}
		Minimum	114.125 {4.493}
Valve stem diameter (mm {in})	IN	Standard	5.970—5.985 {0.2351—0.2356}
		Minimum	5.920 {0.2331}
	EX	Standard	5.965—5.980 {0.2349—0.2354}
		Minimum	5.915 {0.2329}
Valve guide inner diameter (mm {in})			6.030—6.050 {0.2374—0.2381}
Valve guide protrusion height (mm {in})		IN	18.7—19.2 {0.737—0.755}
		EX	17.6—18.1 {0.693—0.712}
Valve seat contact width (mm {in})		IN	1.3—1.9 {0.052—0.074}
		EX	1.3—1.9 {0.052—0.074}
Valve seat angle		IN	45°
		EX	45°
Valve recession (mm{in})	IN	Standard	0.42—0.90 {0.017—0.035}
		Maximum	1.25 {0.049}
	EX	Standard	0.46—0.94 {0.019—0.037}
		Maximum	1.29 {0.051}
Valve spring			
Standard height (mm {in})		IN	38.0 {1.50}
		EX	38.0 {1.50}
Pressing force/height (N {kgf, lbf}/mm{in})		IN	172.1—194.9 {17.55—19.87,38.61—43.79}/38.0 {1.50}
		EX	172.1—194.9 {17.55—19.87,38.61—43.79}/38.0 {1.50}
Out-of-square (mm{in})		Maximum	1.55 {0.061}
Camshaft			
Runout (mm {in})		Maximum	0.03 {0.0012}
Cam lobe height (mm {in})	IN	Standard	40.140 {1.5803}
		Minimum	39.940 {1.5724}
	EX	Standard	39.809 {1.5673}
		Minimum	39.609 {1.5594}
Journal diameter (mm {in})		Standard	31.950—31.975 {1.2579—1.2588}
		Minimum	31.920 {1.2567}
Journal oil clearance (mm {in})		Standard	0.025—0.030 {0.0010—0.0011}
		Maximum	0.075 {0.0030}
End play (mm {in})		Standard	0.03—0.16 {0.0012—0.0062}
		Maximum	0.20 {0.0079}

Item			Specification
Cylinder block			
Cylinder head gasket contact surfaces distortion (mm {in})		Maximum	X direction: 0.01 {0.0004}
			Y direction: 0.03 {0.0012}
Cylinder bore diameter (mm {in})	Standard		86.000—86.022 {3.3859—3.3866}
	0.25 {0.01} oversize		86.250—86.272 {3.3957—3.3965}
	0.50 {0.02} oversize		86.500—86.522 {3.4055—3.4063}
Wear limit (mm {in})			0.15 {0.006}
Oil jet valve,nozzle			
Nozzle opening pressure (kPa{kgf/cm ^{2},psi})			138—196 {1.4—2.0,20—28}
Piston			
Piston diameter [Measured at 90° to pin bore axis and 10mm {0.39 in} above the bottom of piston] (mm {in})	Standard		85.973—86.015 {3.3848—3.3864}
	0.25 {0.01} oversize		86.223—86.265 {3.3946—3.3962}
	0.50 {0.02} oversize		86.473—86.515 {3.4045—3.4061}
Piston-to-cylinder clearance (mm {in})		Standard	0—0.034 {0—0.0013}
		Maximum	0.10 {0.0039}
Piston pin bore diameter (mm {in})			29.997—30.007 {1.1810—1.1813}
Piston ring			
Piston ring-to-ring groove clearance (mm {in})		Top	0.05—0.09 {0.0020—0.0035}
		Second	0.04—0.08 {0.0016—0.0031}
		Oil	0.03—0.07 {0.0012—0.0027}
		Maximum	0.15 {0.0059}
End gap [Measured in cylinder] (mm {in})		Top	0.20—0.30 {0.008—0.011}
		Second	0.20—0.30 {0.008—0.011}
		Oil	0.20—0.30 {0.008—0.011}
		Maximum	1.0 {0.039}
Piston pin			
Diameter (mm {in})			29.994—30.000 {1.1809—1.1811}
Connecting rod-to-piston pin clearance (mm {in})			0.014—0.036 {0.00056—0.00141}
Piston-to-piston pin clearance (mm {in})			-0.003—0.013 {-0.00011—0.00051}
Crankshaft			
Runout (mm {in})			0.03 {0.001}
Main journal diameter (mm {in}	Standard		59.937—59.955 {2.3598—2.3604}
	0.25{0.01} undersize		59.687—59.705 {2.3499—2.3505}
	0.50{0.02} undersize		59.437—59.455 {2.3401—2.3407}
	0.75{0.03} undersize		59.187—59.205 {2.3302—2.3309}
Out-of-round (mm {in})			0.03 {0.001}
Crank pin diameter mm {in})	Standard		50.940—50.955 {2.0056—2.0060}
	0.25{0.01} undersize		50.690—50.705 {1.9957—1.9962}
	0.50{0.02} undersize		50.440—50.455 {1.9859—1.9864}
	0.75{0.03} undersize		50.190—50.205 {1.9760—1.9765}
Out-of-round (mm {in})			0.03 {0.001}
Main journal oil clearance (mm {in})		Standard	0.025—0.044 {0.0010—0.0017}
		Maximum	0.08 {0.003}
Main journal brearing thickness (mm {in}	Standard		2.007—2.022 {0.0791—0.0796}
	0.25{0.01} undersize		2.129—2.139 {0.0839—0.0842}
	0.50{0.02} undersize		2.254—2.264 {0.0888—0.0891}
	0.75{0.03} undersize		2.379—2.389 {0.0937—0.0940}
Crankshaft end play (mm {in}		Standard	0.040—0.282 {0.00158—0.01110}
		Maximum	0.30 {0.012}
Trust bearing thickness (mm {in}	Standard		2.00—2.05 {0.0788—0.0807}
	0.35{0.01}undersize		2.175—2.225 {0.0857—0.0876}

Item			Specification
Connecting rod			
Small end inner diameter	(mm {in})		30.014—30.030 {1.1817—1.1822}
Length (Center to center)	(mm {in})		151.95—152.05 {5.983—5.986}
Bending	(mm {in})		0.080 {0.0031} max./50 {2.0}
Distortion	(mm {in})		0.080 {0.0031} max./50 {2.0}
Connecting rod bearing oil clearance	(mm {in})	Standard	0.027—0.055 {0.0011—0.0021}
		Maximum	0.10 {0.0039}
Connecting rod bearing thickness	(mm {in})	Standard	1.506—1.515 {0.0593—0.0596}
		0.25 {0.01}undersize	1.630—1.640 {0.0642—0.0645}
		0.50 {0.02}undersize	1.755—1.765 {0.0691—0.0694}
		0.75 {0.03}undersize	1.880—1.890 {0.0741—0.0744}
Connecting rod side clearance	(mm {in})	Standard	0.110—0.262 {0.0044—0.0103}
		Maximum	0.512 {0.0202}
Bolt			
Cylinder head bolt length	(mm {in})	Maximum	161.0 {6.338}
Timing belt auto tensioner			
Rod project ion[Free length]	(mm {in})		12.9—14.6 {0.508—0.574}
Oil pump			
Relief spring free length	(mm {in})		43.8 {1.724}
Inner rotor tooth tip to outer rotor clearance	(mm {in})	Standard	0.030—0.120 {0.0012—0.0047}
		Maximum	0.16 {0.006}
Outer rotor to body clearance	(mm {in})	Standard	0.200—0.294 {0.0079—0.0115}
		Maximum	0.35 {0.013}
Side clearance	(mm {in})	Standard	0.040—0.100 {0.0016—0.0039}
		Maximum	0.15 {0.0059}
Oil seal			
Camshaft oil seal tapping amount	(mm {in})		0.5—1.5 {0.020—0.059}
Rear oil seal tapping amount	(mm {in})		0—0.5 {0—0.019}
Front oil seal tapping amount	(mm {in})		0—0.5 {0—0.019}

SPECIAL TOOLS

SPECIAL TOOLS ST-2
ENGINE ST-2

SPECIAL TOOLS

ENGINE

AME941001001101

49 0107 680A Engine stand 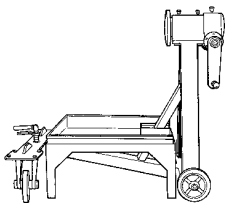	49 L010 1A0 Engine hanger set 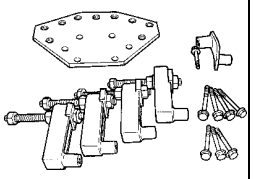	49 E011 1A0 Ring gear brake set 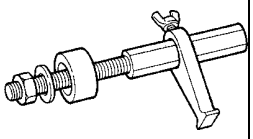
49 0636 100B Valve spring lifter arm 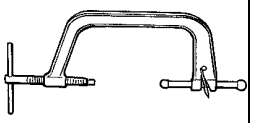	49 B012 0A2 Pivot 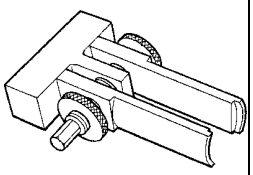	49 S120 170 Valve seal remover 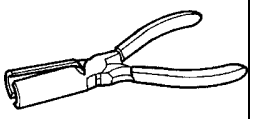
49 B012 005 Valve guide remover & installer 	49 L012 0A0B Valve seal & valve guide installer set 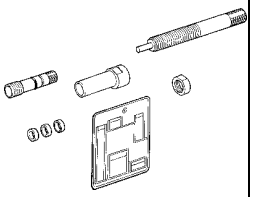	49 S120 215B Pulley puller 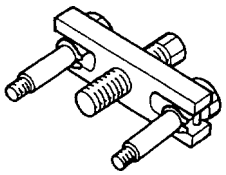
49 G011 001 Piston pin replacer 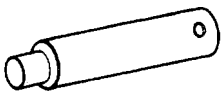	49 G011 106 Camshaft pulley puller 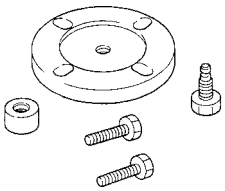	49 S120 710 Coupling flange holder 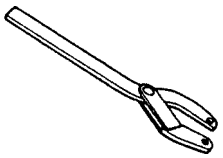
49 G033 107A Dust cover installer 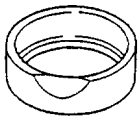	49 B010 002 Oil seal installer 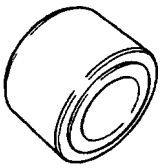	49 1285 071 Bearing puller 
49 U027 003 Oil seal installer 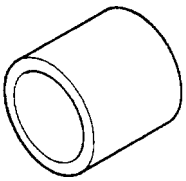	49 G012 0A0 Tappet adjust wrench set 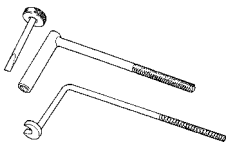	49 G030 797 Handle (Part of 49 G030 795) 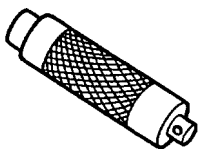
49 G028 201 Support block 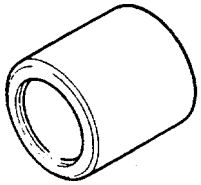	49 E027 002 Attachment 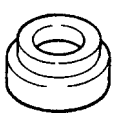	–

Mazda6 Training Manual

FOREWORD

This manual explains each component or system operation and function for the Mazda6.

For proper repair and maintenance, a thorough familiarization with this manual is important, and it should always be kept in a handy place for quick and easy reference.

All the contents of this manual, including drawings and specifications, are the latest available at the time of printing. As modifications affecting repair or maintenance occur, relevant information supplementary to this volume will be made available at Mazda dealers. This manual should be kept up-to-date.

Mazda Motor Corporation reserves the right to alter the specifications and contents of this manual without obligation or advance notice.

All rights reserved. No part of this book may be reproduced or used in any form or by any means, electronic or mechanical—including photocopying and recording and the use of any kind of information storage and retrieval system—without permission in writing.

Mazda Motor Corporation
HIROSHIMA, JAPAN

APPLICATION:
This manual is applicable to vehicles beginning with the Vehicle Identification Numbers (VIN) shown on the following page.

CONTENTS

Title	Section
General Information	GI
Engine	B
Lubrication System	D
Cooling System	E
Fuel and Emission Control Systems	F
Engine Electrical System	G
Clutch	H
Manual Transaxle	J
Automatic Transaxle	K
Front and Rear Axles	M
Steering System	N
Braking System	P
Suspension	R
Body	S
Body Electrical System	T
Heater and Air Conditioner Systems	U

© 2002 Mazda Motor Corporation
PRINTED IN The Netherlands, MARCH 2002
3359–1E–02C

VEHICLE IDENTIFICATION NUMBERS (VIN)

U.K. specs.

JMZ GG12820#	100001—
JMZ GG14320#	100001—
JMZ GG14820#	100001—
JMZ GG12F20#	100001—
JMZ GG12F50#	100001—
JMZ GG14F20#	100001—
JMZ GG14F50#	100001—

European (L.H.D.) specs.

JMZ GG1232*#	100001—
JMZ GG1282*#	100001—
JMZ GG1432*#	100001—
JMZ GG1482*#	100001—
JMZ GG12F2*#	100001—
JMZ GG12F5*#	100001—
JMZ GG14F2*#	100001—
JMZ GG14F5*#	100001—

GCC specs.

JM7 GG32F**#	100001—
JM7 GG34F**#	100001—
JM7 GG42F**#	100001—
JM7 GG44F**#	100001—

RELATED MATERIALS

Engine Workshop Manual L8, LF, L3 . . . . . 1731–1*–02C
Manual Transaxle Workshop Manual
G35M–R 1732–1*–02C
Automatic Transaxle Workshop Manual
FN4A–EL. 1623–10–98E
Automatic Transaxle Workshop Manual
Supplement FN4A–EL 1746–1*–02C
Mazda6 Wiring Diagram
(European (L.H.D.), GCC specs.) 5539–1*–02C
Mazda6 Wirinig Diagram
(U.K. specs.). 5540–1*–02C
Mazda6 Bodyshop Manual
(European (L.H.D. U.K.), GCC specs.) 3360–1*–02C

* : Indicates the printing location
E: Europe
0: Japan

GENERAL INFORMATION

HOW TO USE THIS MANUAL GI-2
VIN CODE GI-2
UNITS GI-4
UNITS TABLE GI-4
NEW STANDARDS GI-5
NEW STANDARDS TABLE GI-5

HOW TO USE THIS MANUAL

VIN CODE

A6E201000001T01

European (L.H.D. U.K.) specs.

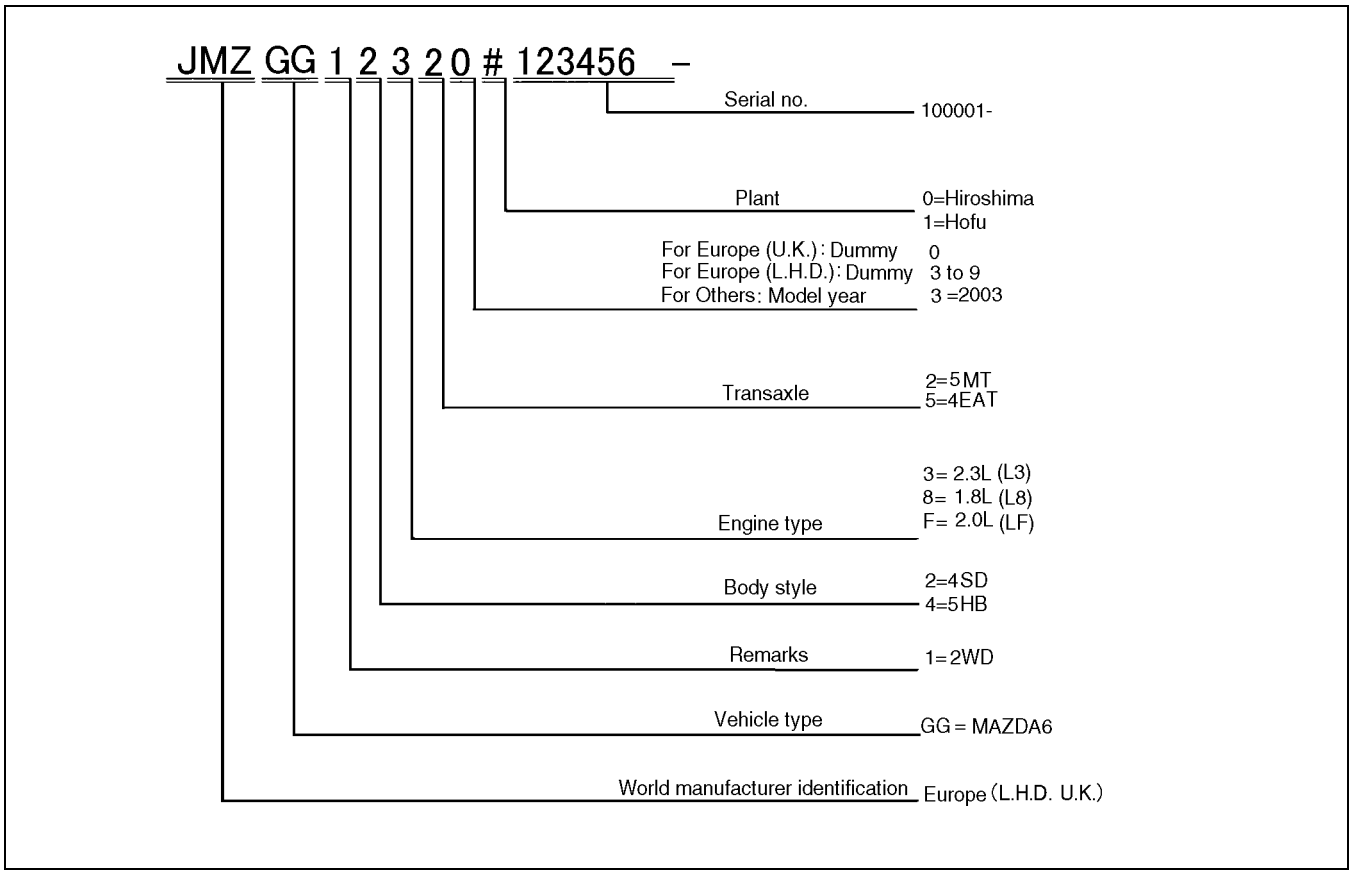

A6E2021T001

GCC specs.

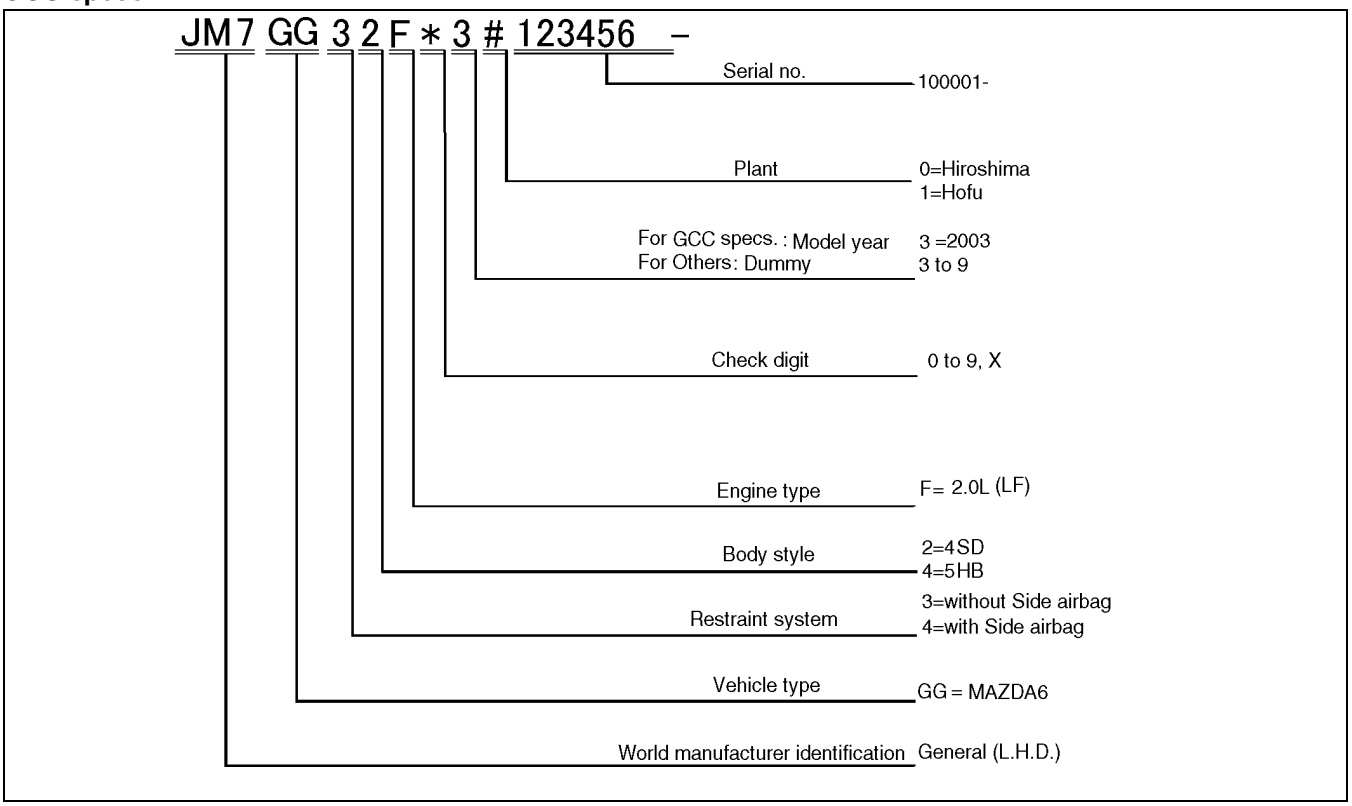

A6E2021T002

UNITS

UNITS TABLE

A6E201200002T01

Electrical current	A (ampere)
Electric power	W (watt)
Electric resistance	ohm
Electric voltage	V (volt)
Length	mm (millimeter)
	in (inch)
Negative pressure	kPa (kilo pascal)
	mmHg (millimeters of mercury)
	inHg (inches of mercury)
Positive pressure	kPa (kilo pascal)
	kgf/cm^2 (kilogram force per square centimeter)
	psi (pounds per square inch)
Torque	N·m (Newton meter)
	kgf·m (kilogram force meter)
	kgf·cm (kilogram force centimeter)
	ft·lbf (foot pound force)
	in·lbf (inch pound force)
Volume	L (liter)
	US qt (U.S. quart)
	Imp qt (Imperial quart)
	ml (milliliter)
	cc (cubic centimeter)
	cu in (cubic inch)
	fl oz (fluid ounce)
Weight	g (gram)
	oz (ounce)

Conversion to SI Units (Système International d'Unités)

- All numerical values in this manual are based on SI units. Numbers shown in conventional units are converted from these values.

Rounding Off

- Converted values are rounded off to the same number of places as the SI unit value. For example, if the SI unit value is 17.2 and the value after conversion is 37.84, the converted value will be rounded off to 37.8.

Upper and Lower Limits

- When the data indicates upper and lower limits, the converted values are rounded down if the SI unit value is an upper limit and rounded up if the SI unit value is a lower limit. Therefore, converted values for the same SI unit value may differ after conversion. For example, consider 2.7 kgf/cm^2 in the following specifications:

  210—260 kPa {2.1—2.7 kgf/cm^2, 30—38 psi}
  270—310 kPa {2.7—3.2 kgf/cm^2, 39—45 psi}

- The actual converted values for 2.7 kgf/cm^2 are 265 kPa and 38.4 psi. In the first specification, 2.7 is used as an upper limit, so the converted values are rounded down to 260 and 38. In the second specification, 2.7 is used as a lower limit, so the converted values are rounded up to 270 and 39.

NEW STANDARDS

NEW STANDARDS TABLE

A6E202800020T01

- Following is a comparison of the previous standard and the new standard.

New Standard		Previous Standard		Remark
Abbreviation	Name	Abbreviation	Name	
AP	Accelerator Pedal	—	Accelerator Pedal	
ACL	Air Cleaner	—	Air Cleaner	
A/C	Air Conditioning	—	Air Conditioning	
BARO	Barometric Pressure	—	Atmospheric Pressure	
B+	Battery Positive Voltage	Vb	Battery Voltage	
—	Brake Switch	—	Stoplight Switch	
—	Calibration Resistor	—	Corrected Resistance	#6
CMP sensor	Camshaft Position Sensor	—	Crank Angle Sensor	
CAC	Charge Air Cooler	—	Intercooler	
CLS	Closed Loop System	—	Feedback System	
CTP	Closed Throttle Position	—	Fully Closed	
CPP	Clutch Pedal Position	—	Clutch Position	
CIS	Continuous Fuel Injection System	EGI	Electronic Gasoline Injection System	
CS sensor	Control Sleeve Sensor	CSP sensor	Control Sleeve Position Sensor	#6
CKP sensor	Crankshaft Position Sensor	—	Crank Angle Sensor 2	
DLC	Data Link Connector	—	Diagnosis Connector	
DTM	Diagnostic Test Mode	—	Test Mode	#1
DTC	Diagnostic Trouble Code(s)	—	Service Code(s)	
DI	Distributor Ignition	—	Spark Ignition	
DLI	Distributorless Ignition	—	Direct Ignition	
EI	Electronic Ignition	—	Electronic Spark Ignition	#2
ECT	Engine Coolant Temperature	—	Water Thermo	
EM	Engine Modification	—	Engine Modification	
—	Engine Speed Input Signal	—	Engine RPM Signal	
EVAP	Evaporative Emission	—	Evaporative Emission	
EGR	Exhaust Gas Recirculation	—	Exhaust Gas Recirculation	
FC	Fan Control	—	Fan Control	
FF	Flexible Fuel	—	Flexible Fuel	
4GR	Fourth Gear	—	Overdrive	
—	Fuel Pump Relay	—	Circuit Opening Relay	#3
FSO solenoid	Fuel Shut Off Solenoid	FCV	Fuel Cut Valve	#6
GEN	Generator	—	Alternator	
GND	Ground	—	Ground/Earth	
HO2S	Heated Oxygen Sensor	—	Oxygen Sensor	With heater
IAC	Idle Air Control	—	Idle Speed Control	
—	IDM Relay	—	Spill Valve Relay	#6
—	Incorrect Gear Ratio	—	—	
—	Injection Pump	FIP	Fuel Injection Pump	#6
—	Input/Turbine Speed Sensor	—	Pulse Generator	
IAT	Intake Air Temperature	—	Intake Air Thermo	
KS	Knock Sensor	—	Knock Sensor	
MIL	Malfunction Indicator Lamp	—	Malfunction Indicator Light	
MAP	Manifold Absolute Pressure	—	Intake Air Pressure	
MAF sensor	Mass Air Flow Sensor	—	Airflow Sensor	
MFL	Multiport Fuel Injection	—	Multiport Fuel Injection	
OBD	On-Board Diagnostic	—	Diagnosis/SelfDiagnosis	
OL	Open Loop	—	Open Loop	

New Standard		Previous Standard		Remark
Abbreviation	Name	Abbreviation	Name	
—	Output Speed Sensor	—	Vehicle Speed Sensor 1	
OC	Oxidation Catalytic Converter	—	Catalytic Converter	
O2S	Oxygen Sensor	—	Oxygen Sensor	
PNP	Park/Neutral Position	—	Park/Neutral Range	
—	PCM Control Relay	—	Main Relay	#6
PSP	Power Steering Pressure	—	Power Steering Pressure	
PCM	Powertrain Control Module	ECU	Engine Control Unit	#4
—	Pressure Control Solenoid	—	Line Pressure Solenoid Valve	
PAIR	Pulsed Secondary Air Injection	—	Secondary Air Injection System	Pulsed injection
—	Pump Speed Sensor	—	NE Sensor	#6
AIR	Secondary Air Injection	—	Secondary Air Injection System	Injection with air pump
SAPV	Secondary Air Pulse Valve	—	Reed Valve	
SFI	Sequential Multipoint Fuel Injection	—	Sequential Fuel Injection	
—	Shift Solenoid A	—	1-2 Shift Solenoid Valve	
		—	Shift A Solenoid Valve	
—	Shift Solenoid B	—	2-3 Shift Solenoid Valve	
		—	Shift B Solenoid Valve	
—	Shift Solenoid C	—	3-4 Shift Solenoid Valve	
3GR	Third Gear	—	3rd Gear	
TWC	Three Way Catalytic Converter	—	Catalytic Converter	
TB	Throttle Body	—	Throttle Body	
TP sensor	Throttle Position Sensor	—	Throttle Sensor	
TCV	Timer Control Valve	TCV	Timing Control Valve	#6
TCC	Torque Converter Clutch	—	Lockup Position	
TCM	Transmission (Transaxle) Control Module	—	ECAT Control Unit	
—	Transmission (Transaxle) Fluid Temperature Sensor	—	ATF Thermosensor	
TR	Transmission (Transaxle) Range	—	Inhibitor Position	
TC	Turbocharger	—	Turbocharger	
VSS	Vehicle Speed Sensor	—	Vehicle Speed Sensor	
VR	Voltage Regulator	—	IC Regulator	
VAF sensor	Volume Air Flow Sensor	—	Air flow Sensor	
WUTWC	Warm Up Three Way Catalytic Converter	—	Catalytic Converter	#5
WOT	Wide Open Throttle	—	Fully Open	

#1 : Diagnostic trouble codes depend on the diagnostic test mode
#2 : Controlled by the PCM
#3 : In some models, there is a fuel pump relay that controls pump speed. That relay is now called the fuel pump relay (speed).
#4 : Device that controls engine and powertrain
#5 : Directly connected to exhaust manifold
#6 : Part name of diesel engine

ENGINE

ABBREVIATIONS B-2
ABBREVIATIONS B-2
OUTLINE B-2
OUTLINE OF CONSTRUCTION B-2
FEATURES B-2
ENGINE PERFORMANCE CURVE B-3
SPECIFICATIONS B-4
STRUCTURAL VIEW B-4
ENGINE B-5
CYLINDER HEAD COVER B-5
CYLINDER HEAD B-5
CYLINDER HEAD GASKET B-6
CYLINDER BLOCK B-6
CRANKSHAFT, MAIN BEARING B-8
BALANCER UNIT B-9
CRANKSHAFT PULLEY B-11
ENGINE FRONT COVER B-12
PISTON, PISTON RING, PISTON PIN B-13
CONNECTING ROD, CONNECTING ROD BEARING B-14
DRIVE BELT B-15
ENGINE MOUNT B-16
VALVE MECHANISM B-19
VALVE MECHANISM B-19
CAMSHAFT B-20
CAMSHAFT SPROCKET B-22
CRANKSHAFT SPROCKET B-23
TIMING CHAIN, CHAIN TENSIONER B-24
VALVE, VALVE SPRING, VALVE SEAL, VALVE GUIDE B-25
TAPPET B-26
VALVE MECHANISM B-27
VARIABLE VALVE TIMING ACTUATOR B-33
OIL CONTROL VALVE (OCV) B-33

ABBREVIATIONS

ABBREVIATIONS

A6E220102000T01

A/C	Air conditioner
ABDC	After bottom dead center
ATDC	After top dead center
BBDC	Before bottom dead center
BTDC	Before bottom dead center
DOHC	Double overhead camshaft
EX	Exhaust
IN	Intake
OCV	Oil control valve
P/S	Power steering
PCV	Positive crankcase ventilation
SST	Special service tool
TDC	Top dead center

OUTLINE

OUTLINE OF CONSTRUCTION

A6E220202000T01

- The new L8 engine models (1.8L) has been adopted for European specs.
- The new LF engine models (2.0L) has been adopted.
- The new L3 (with variable valve timing mechanism) engine models (2.3L) has been adopted for European specs.

FEATURES

A6E220202000T02

Improved engine performance

- The variable valve timing mechanism has been adopted for L3 engine models (2.3L).

Reduced engine weight

- Main parts (cylinder head and cylinder block) made of aluminum alloy.

Reduced engine noise and vibration

- The cylinder head is made of aluminum alloy.
- The cassette type balancer unit has been adopted for the L3 engine models (2.3L).
- Silent timing chain has been adopted.
- A deep skirt type and forms the ladder frame structure with the integrated main bearing cap has been adopted for the cylinder block.
- The crankshaft pulley with torsional damper has been adopted.
- The engine mount of pendulum type has been adopted.

Improved serviceability

- The drive belt of serpentine type has been adopted.
- Tension of the drive belt is adjusted automatically with an auto-tensioner.
- Timing chains have been adopted to eliminate the need for replacement.
- The engine front cover with service hole has been adopted. (for unlocking the chain adjust ratchet, and securing the tensioner arm).

ENGINE PERFORMANCE CURVE

A6E220202000T04

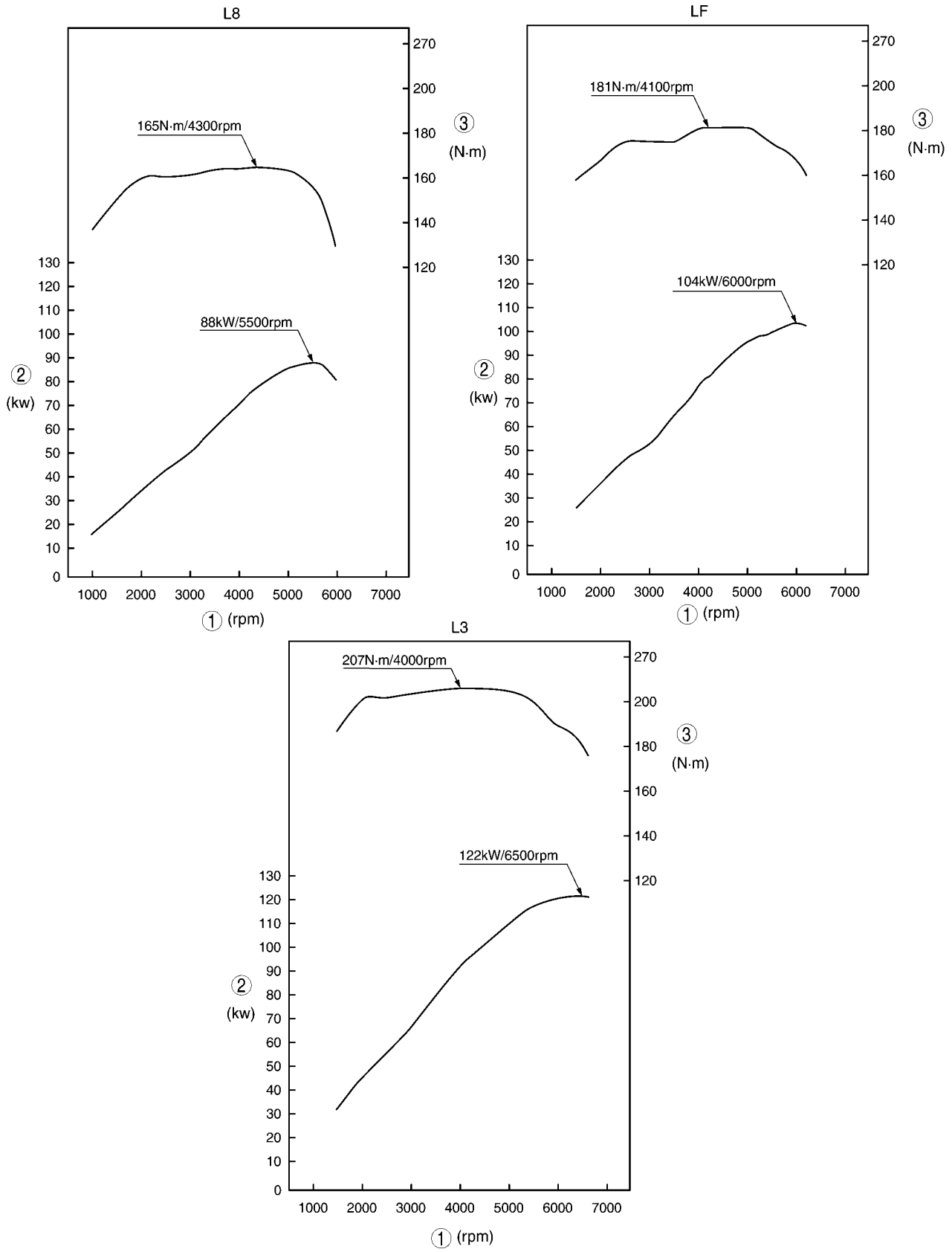

AME2202N001

1	Engine speed

2	Output
3	Torque

SPECIFICATIONS

A6E220202000T03

Item				Specification		
				L8	LF	L3
Type				Gasoline, 4-cycle		
Cylinder arrangement and number				In-line, 4-cylinder		
Combustion chamber				Pentroof		
Valve system				DOHC, timing chain driven, 16 valves		
Displacement (ml {cc, cu in})				1,798 {1,798, 109.7}	1,999 {1,999, 121.9}	2,261 {2,261, 137.9}
Bore × stroke (mm {in})				83.0 × 83.1 {3.27 ×3.27}	87.5 × 83.1 {3.44 ×3.27}	87.5 × 94.0 {3.44 × 3.70}
Compression ratio				10.8:1	10.8:1	10.6:1
Compression pressure (kPa {kgf/cm^2, psi} [rpm])				1,750 {17.85, 253.8} [300]	1,720 {17.54, 249.5} [300]	1,430 {14.58, 207.4} [290]
Valve timing	IN	Open	BTDC (°)	4	4	0—25
		Close	ABDC (°)	33	52	0—37
	EX	Open	BBDC (°)	37	37	42
		Close	ATDC (°)	4	4	5
Valve clearance (mm {in})		IN		0.22 {0.0087}— 0.28 {0.011} [Engine cold]		
		EX		0.27 {0.011}— 0.33 {0.012} [Engine cold]		

STRUCTURAL VIEW

A6E220202000T05

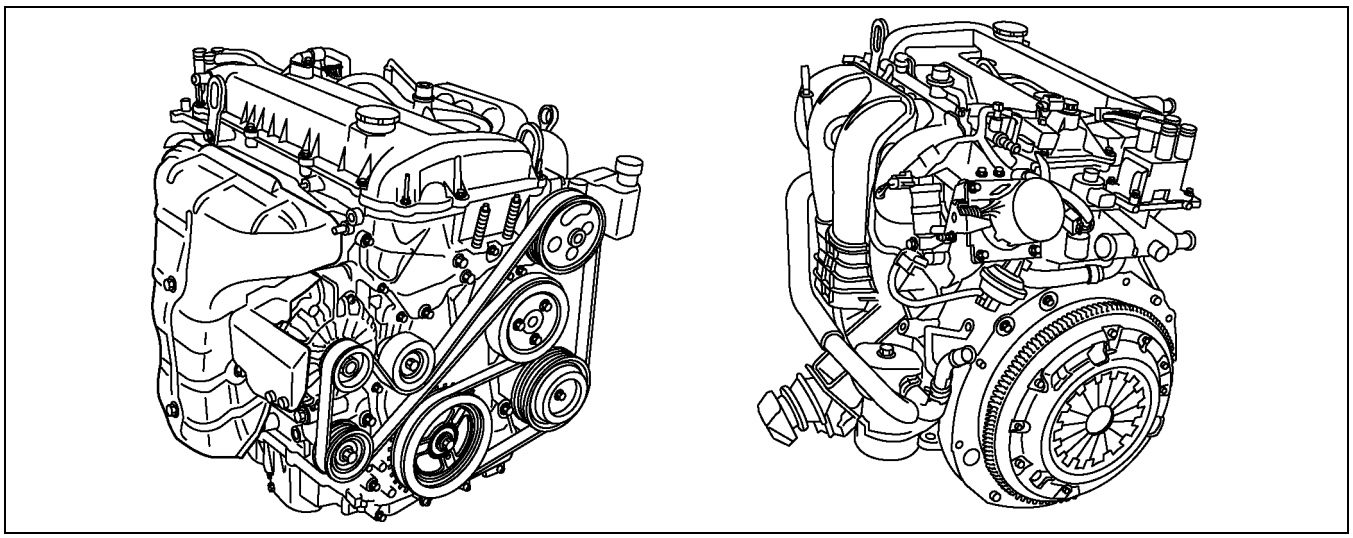

AME2202N002

ENGINE

CYLINDER HEAD COVER

A6E222410100T01

Structure

- The cylinder head cover is made of integrated aluminum alloy, which is lightweight and sound absorbent.
- The oil filler cap is a screw-in type. The boss for installing the camshaft position (CMP) sensor is provided at the rear of the cylinder head cover.
- L3 engine models has a hole for installing the oil control (OCV) valve.

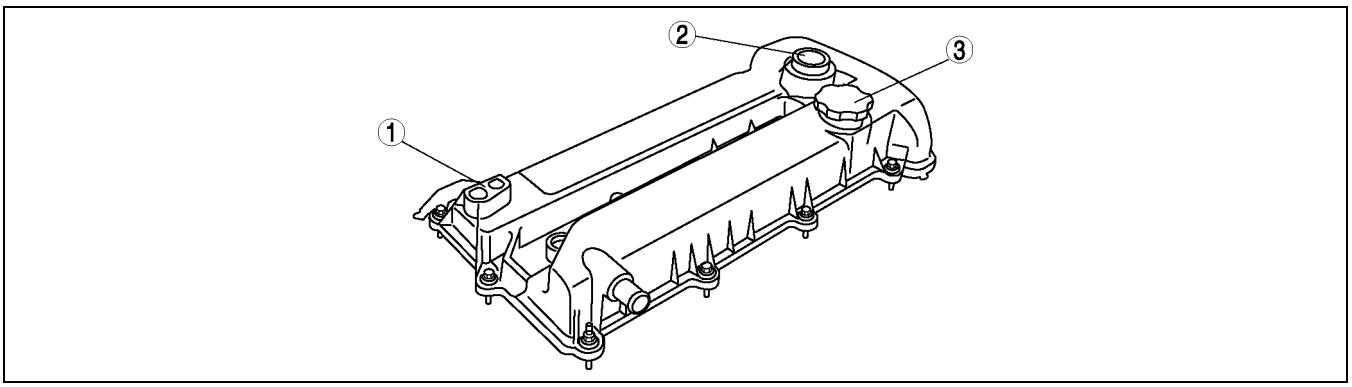

AME2224N001

1	Camshaft position (CMP) sensor
2	Oil control (OCV) valve attachment hole (L3)

3	Oil filler cap

CYLINDER HEAD

A6E222410100T02

Structure

- The cylinder head is made of a high heat conductive, lightweight aluminum alloy, which has been quenched.
- Compact, pentroof-type combustion chambers have been adopted. The spark plugs are mounted at the top of the combustion chambers to improve combustion efficiency.
- The intake/exhaust port layout is a cross flow type, (the angle between two valves is 39°, the two intake valves and the two exhaust valves per cylinder) which improves air intake/exhaust efficiency.
- The cylinder head bolt is a plastic region tightening bolt, which is tightened in five motions. It insures a stable axis during tightening.

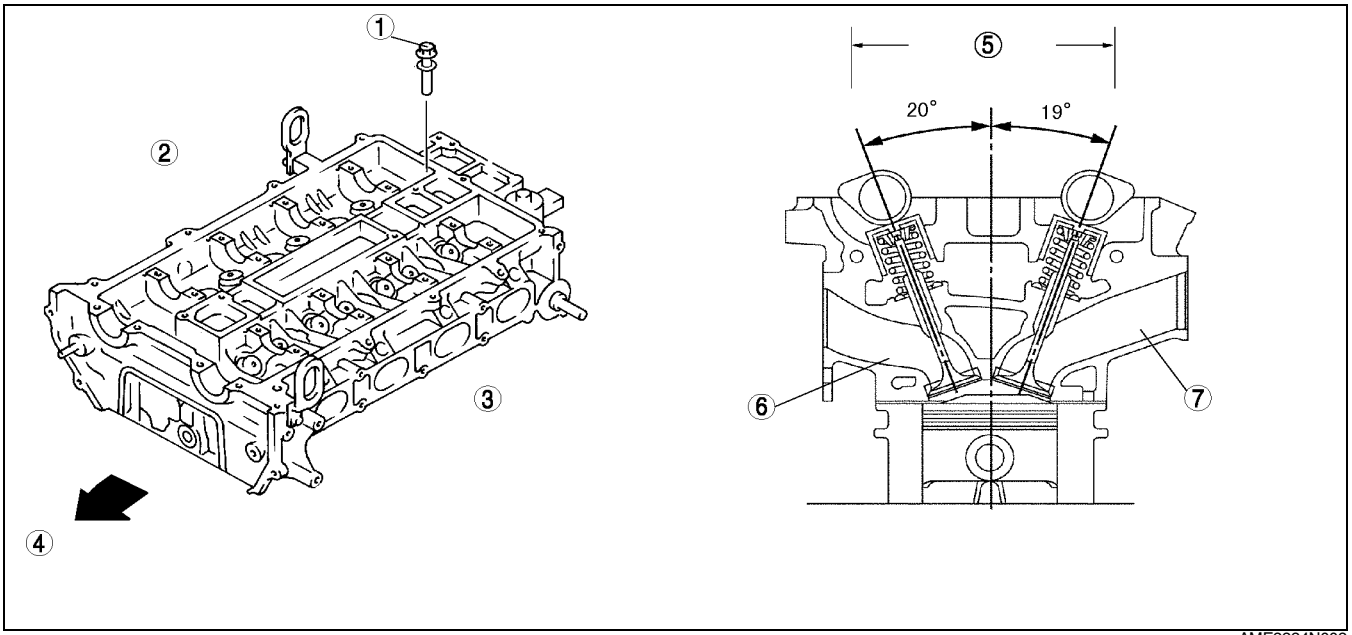

AME2224N002

1	Cylinder head bolt
2	Exhaust side
3	Intake side
4	Engine front side

5	The angle between two valves
6	Intake port
7	Exhaust port

CYLINDER HEAD GASKET

A6E222410271T01

Structure

- Cylinder head gaskets are 2 layer-metal gaskets.

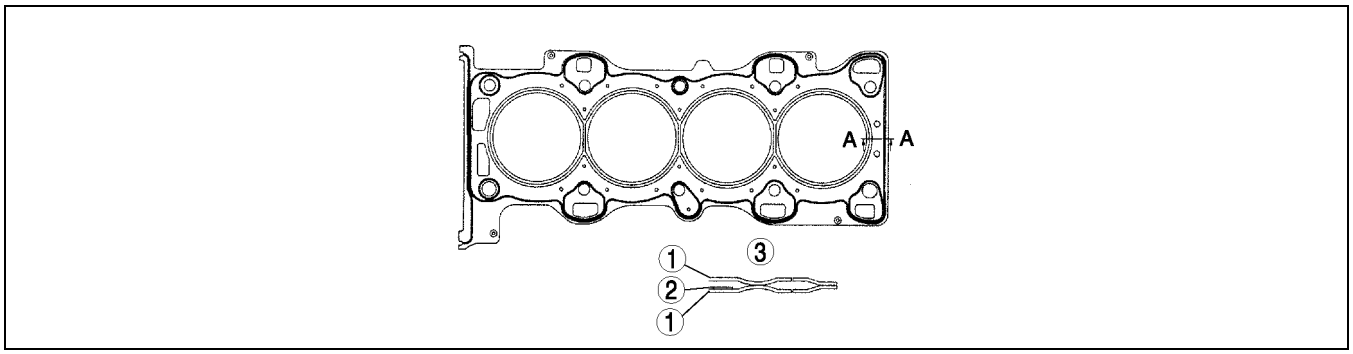

AME2224N400

1	Beat plate
2	Shim

3	A-A sectional view

CYLINDER BLOCK

A6E222410300T01

Structure

- The cylinder block is made of aluminum alloy, which is cast with the cast iron liner, improving heat radiation and decreasing weight.
- The cylinder block is a deep skirt type and forms the ladder frame structure with the integrated main bearing cap. The water jacket of the cylinder block is a closed deck type. Its higher rigidity reduces vibration and noise.
- The cylinder block has the oil separator cover on the opposite side of the fresh air intake, the PCV (positive crankcase ventilation) valve and the oil separator function with an part for installing the PCV valve, to improve blow-by gas ventilation efficiency.
- The tab for alignment, used to install the upper main journal and the lower main bearing, has been decommissioned.
- The main bearing cap bolt is a plastic region tightening bolt, which is to be tightened in two motions. It insures a stable axis during tightening.

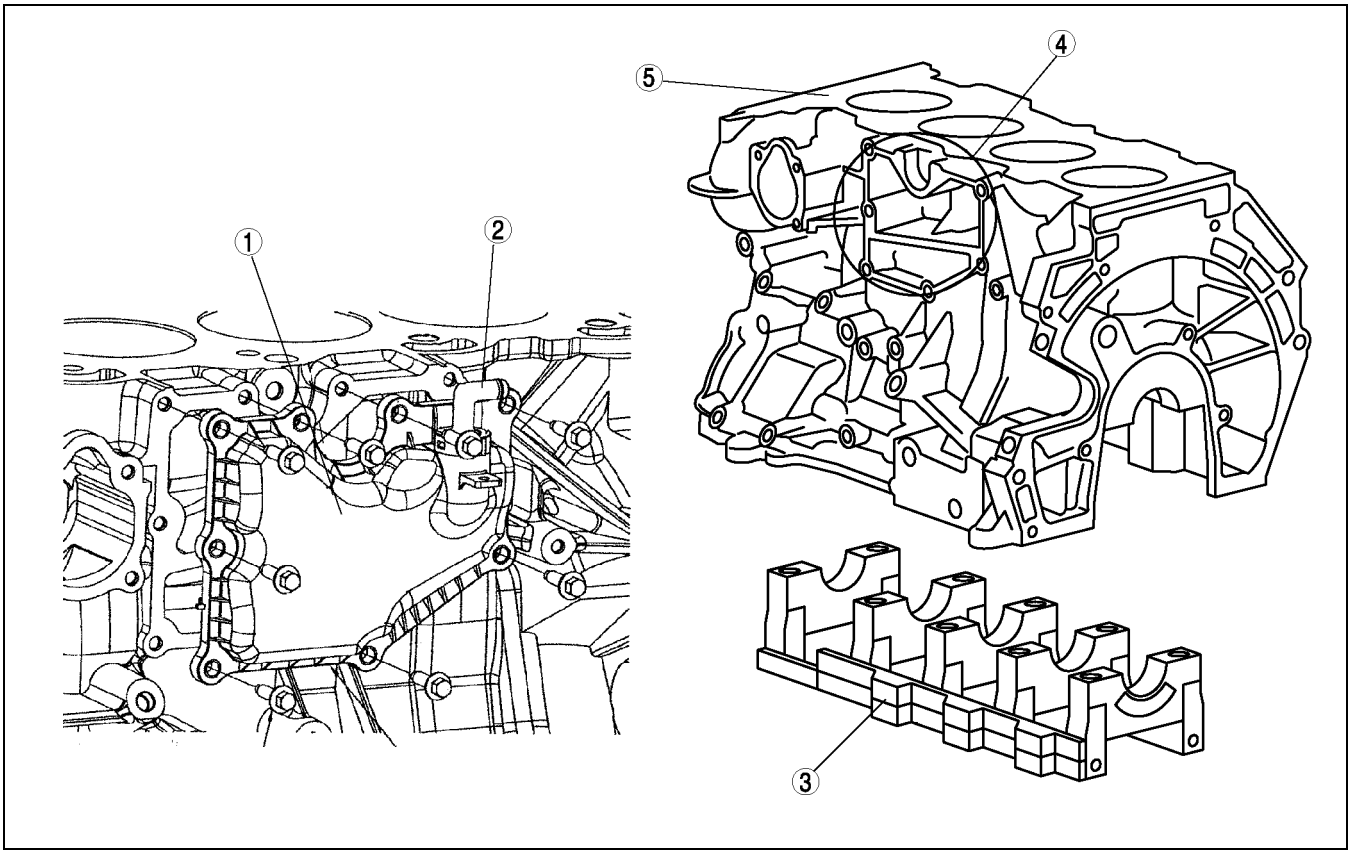

AME2224N003

1	Oil separator cover
2	PCV valve
3	Main bearing cap

4	Oil separator cover attachment part
5	Cylinder block

- The service hole for installing the SST, which is used for detect the No.1 cylinder's TDC position, is located at the right side of the cylinder block. The TDC position can be detected when the SST edge touches the cutting surface of the No.1 counter weight.

1	Cylinder block
2	No.1 cylinder
3	Service hole
4	SST
5	No.1 cylinder TDC position
6	No.1 piston
7	Crankshaft counter

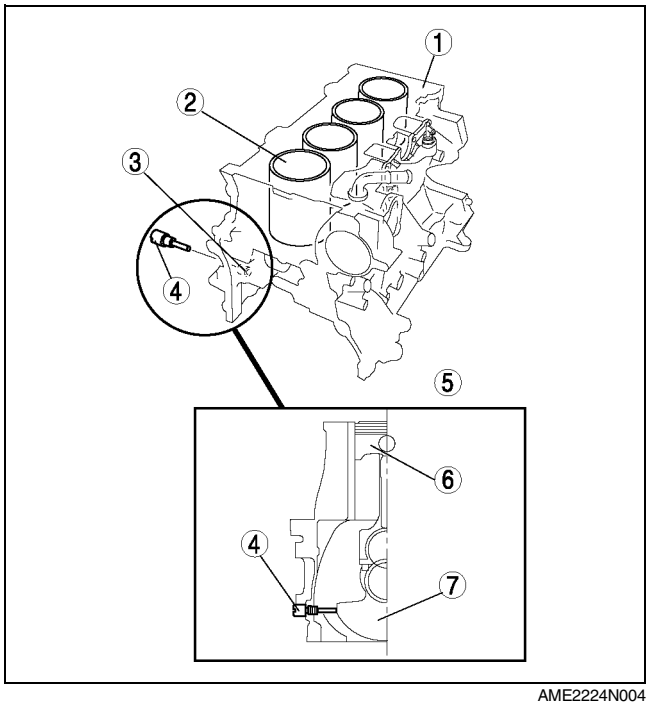

AME2224N004

CRANKSHAFT, MAIN BEARING

A6E222411301T01

Structure

- Cast iron 5 axle-hole 4 counter weight has been adopted for the L8 engine models and LF engine models crankshafts.
- Cast iron 5 axle-hole 8 counter weight has been adopted for the L3 engine models crankshaft. The shrinkage fitted drive gear is attached to the crankshaft and the crankshaft drives the balance shaft.
- The conventional positioning key has been decommissioned and the tightening pressure of the crankshaft pulley tightening bolt secures the installation part of the crankshaft sprocket. When installing the crankshaft sprocket, always use the SST and align the No.1 cylinder to TDC.

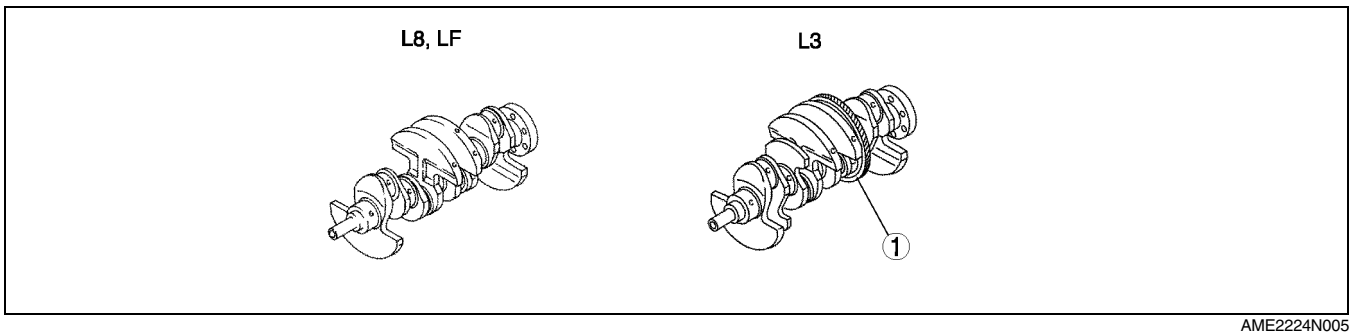

AME2224N005

1	Drive gear

- The oil line for supplying oil to each journal is provided in the crankshaft. And the crank pin and the fillets on both sides of journal are rolled so that they bear the heavy loads.

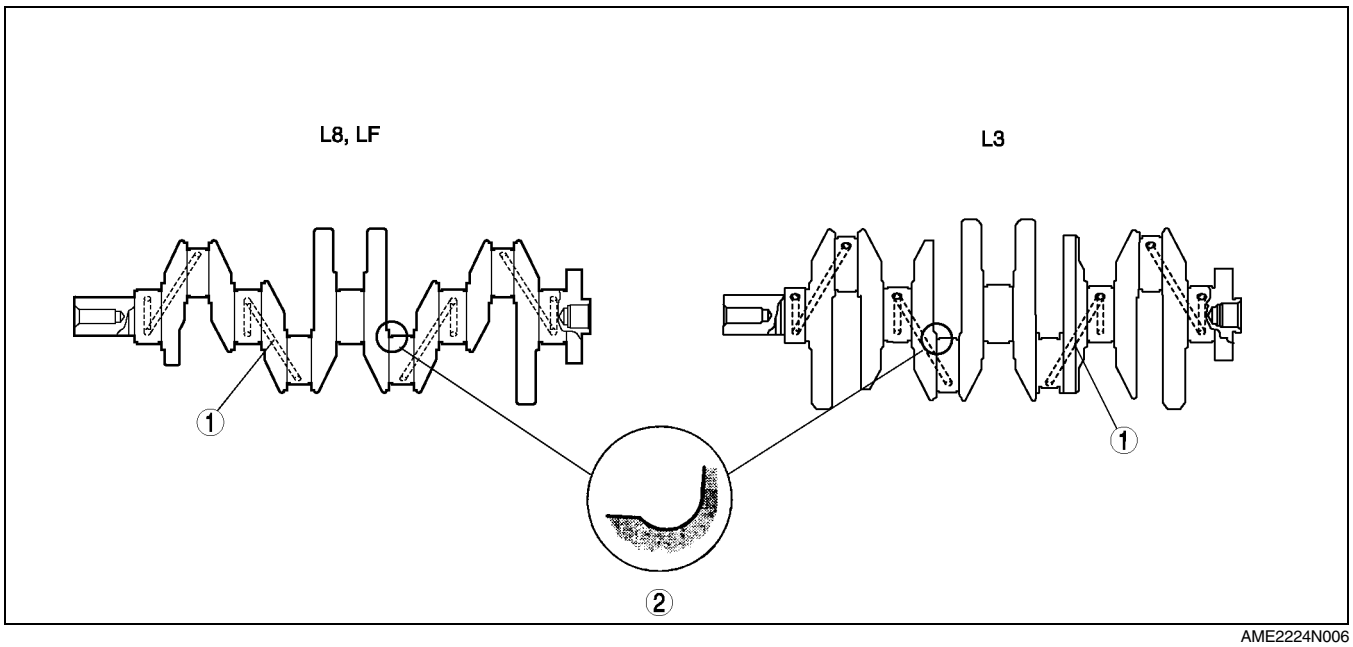

AME2224N006

1	Oil passage

2	Fillet roll area

- The upper and lower main bearings are made of aluminum alloy and the upper side No.3 journal bearing is integrated with the thrust bearing. The upper main bearing has the oil grooves and the oil holes.
- The upper and lower bearings' positioning tabs for installing the main journal have been decommissioned.
- Measure and attach the main bearings (upper and lower) so that they are positioned at the center the main bearing cap.

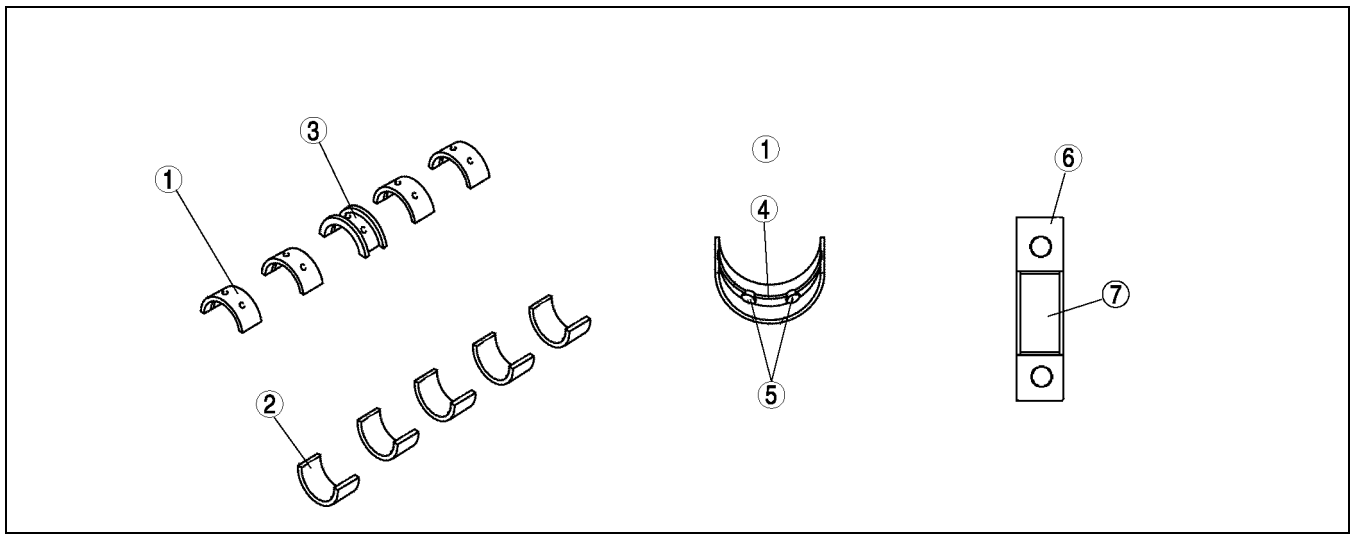

AME2224N007

1	Upper main bearing
2	Lower main bearing
3	Thrust bearing
4	Supplying engine oil

5	2 holes Supplying engine oil
6	Main bearing cap
7	Main bearing

- Three kinds of main bearings are available depending on the oil clearance.

(mm {in})

Bearing size	Color	Bearing thickness
Standard	Green	2.506—2.509 {0.0987—0.0988}
0.25 {0.01} Oversize		2.628—2.634 {0.1035—0.1037}
0.50 {0.02} Oversize		2.753—2.759 {0.1084—0.1086}

BALANCER UNIT

A6E222411301T02

Outline

- The cassette type balancer, which is separated from the engine, has been adopted for the L3 engine models to reduce vibration from the engine.

1	Cassette type balancer unit
2	balance shaft

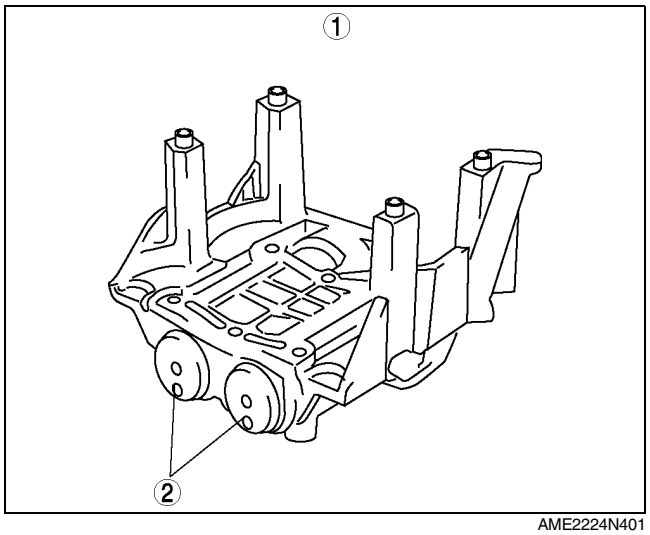

AME2224N401

Structure

- The balancer unit is configured with two balancer shafts (No.1 and No.2) with weights, the balancer unit case and the adjust shim which adjusts the amount of backlash in the crankshaft.
- The two balancer shafts (No.1 and No.2) are driven by the drive gear which is attached to the crankshaft.
- The balancer unit cannot be disassembled because it is a precision unit.

Operation

- The rotary motion is transmitted from the drive gear, which is between the back of the No.3 cylinder and the No.4 main journal, directly to the No.1 balance shaft with driven gear. Then the balance unit transmits the rotation motion to the No.2 balance shaft. The ratio of gears, which are attached to No.1 and No. 2 balancer shafts, has been set so that the gear rotates at twice the velocity of the crankshaft. The balancer shaft's rotation velocity counterbalances (generate the force in the opposite direction) the rotation inertial force (secondary inertial rotation force) from the crankshaft.

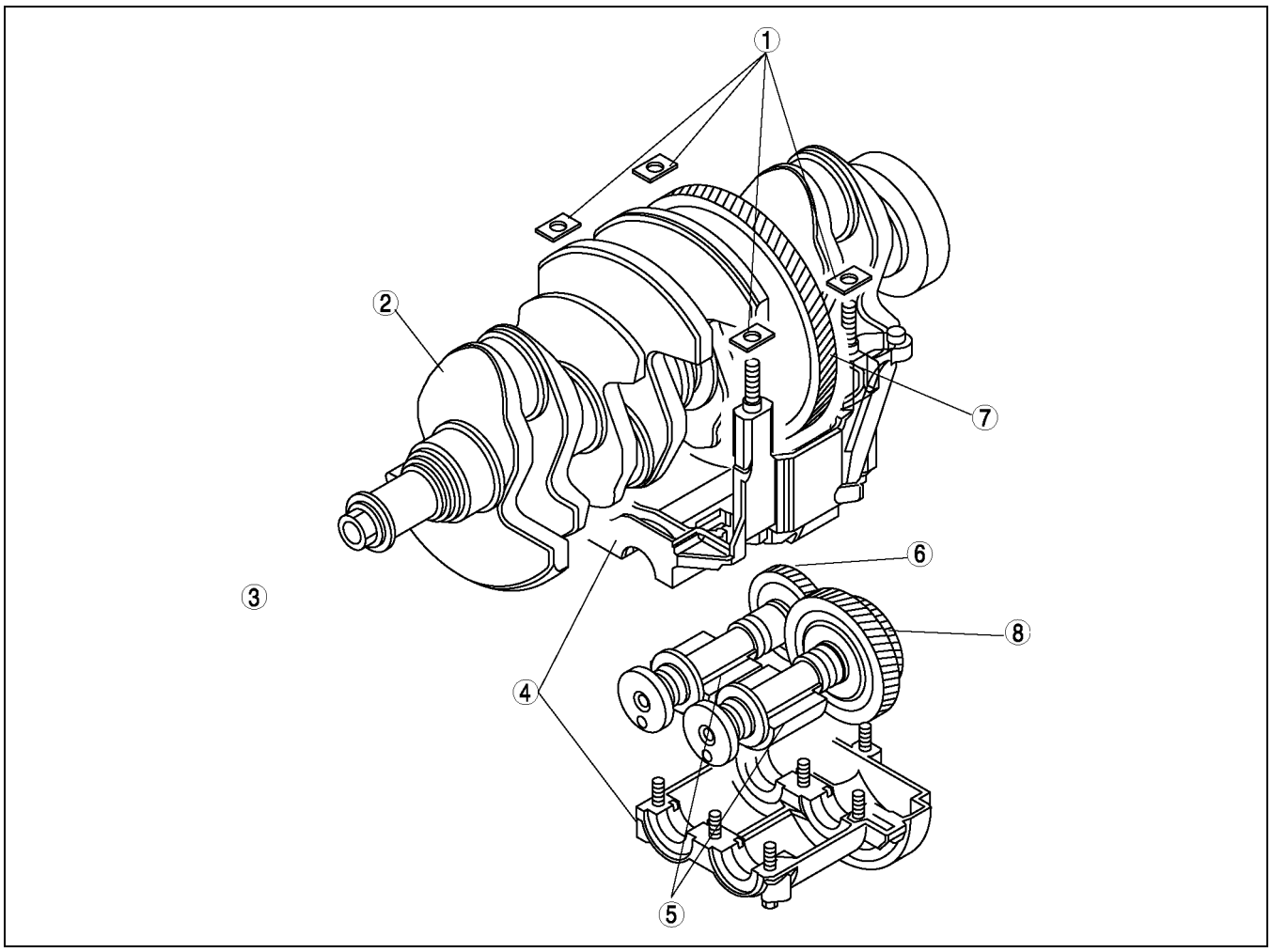

AME2224N402

1	Adjust shim
2	Crankshaft
3	Engine front
4	Balancer unit case

5	Weights
6	No.2 balance shaft
7	Drive gear
8	No.1 balance shaft with driven gear

- Replace the adjust shim to adjust backlash. There are 40 kinds of adjuster shim depending on the thickness. To determine the kind, check the engraved identification mark (2 digits) on the adjust shim.

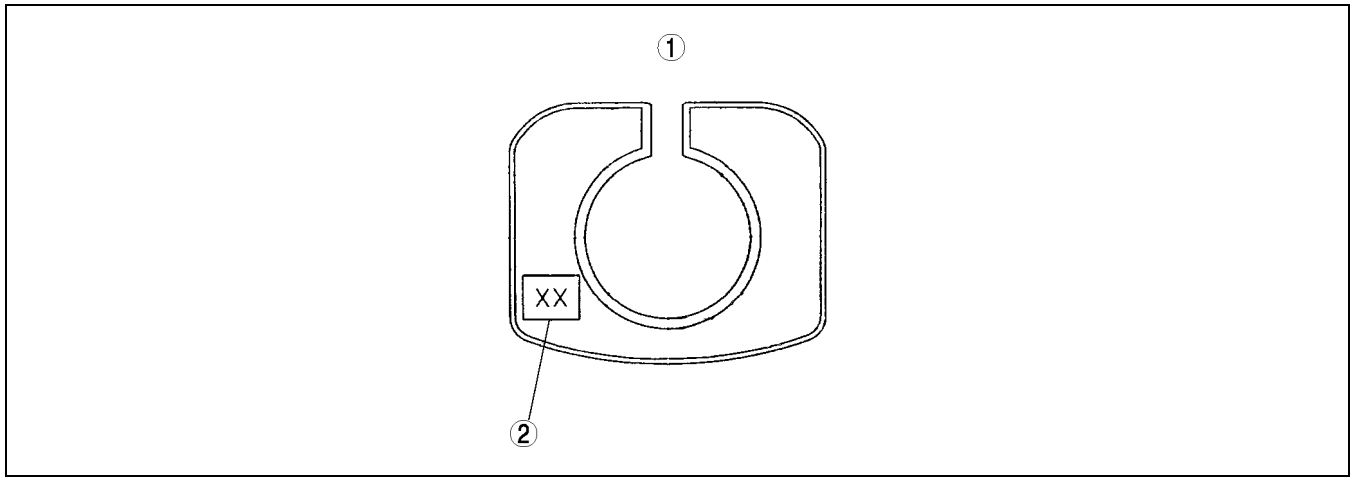

AME2224N403

1	Cylinder block

2	Engraved identification mark (2 digits)

CRANKSHAFT PULLEY

A6E222411371T01

Structure

- The crankshaft position (CKP) signal detecting blade has been adopted for the crankshaft pulley. And the torsional damper, which prevents the crankshaft from wobbling, has also been adopted for the crankshaft.
- The positioning key slot, which is used for attaching the pulley to the crankshaft, has been decommissioned. For aligning the crankshaft pulley to the crankshaft, use the positioning hole on the engine front cover and the crankshaft pulley.
- Crankshaft pulley rock bolt is the plastic region tightening bolt, which can be tightened in 2 motions. It insures a stable axis during tightening.

1	Elevation view
2	Sectional view
3	Braid for CKP sensor signal detection
4	Hole for pulley positioning
5	Torsional damper

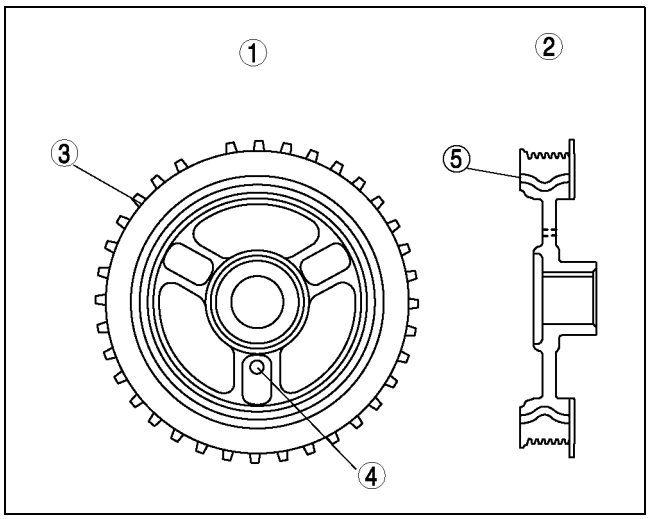

AME2224N012

ENGINE FRONT COVER

A6E222401001T01

Structure

- The engine front cover is made of aluminum alloy, and is integrated with the No.3 engine-mounting bracket, to improve noise absorption and decrease weight.
- The hole for crankshaft pulley positioning bolt, the service hole for unlocking the chain adjuster ratchet, and the service hole for securing the tensioner arm when loosening the timing chain, are on the engine front cover.
- The oil line and the integrated oil filter are on the L3 engine front cover.

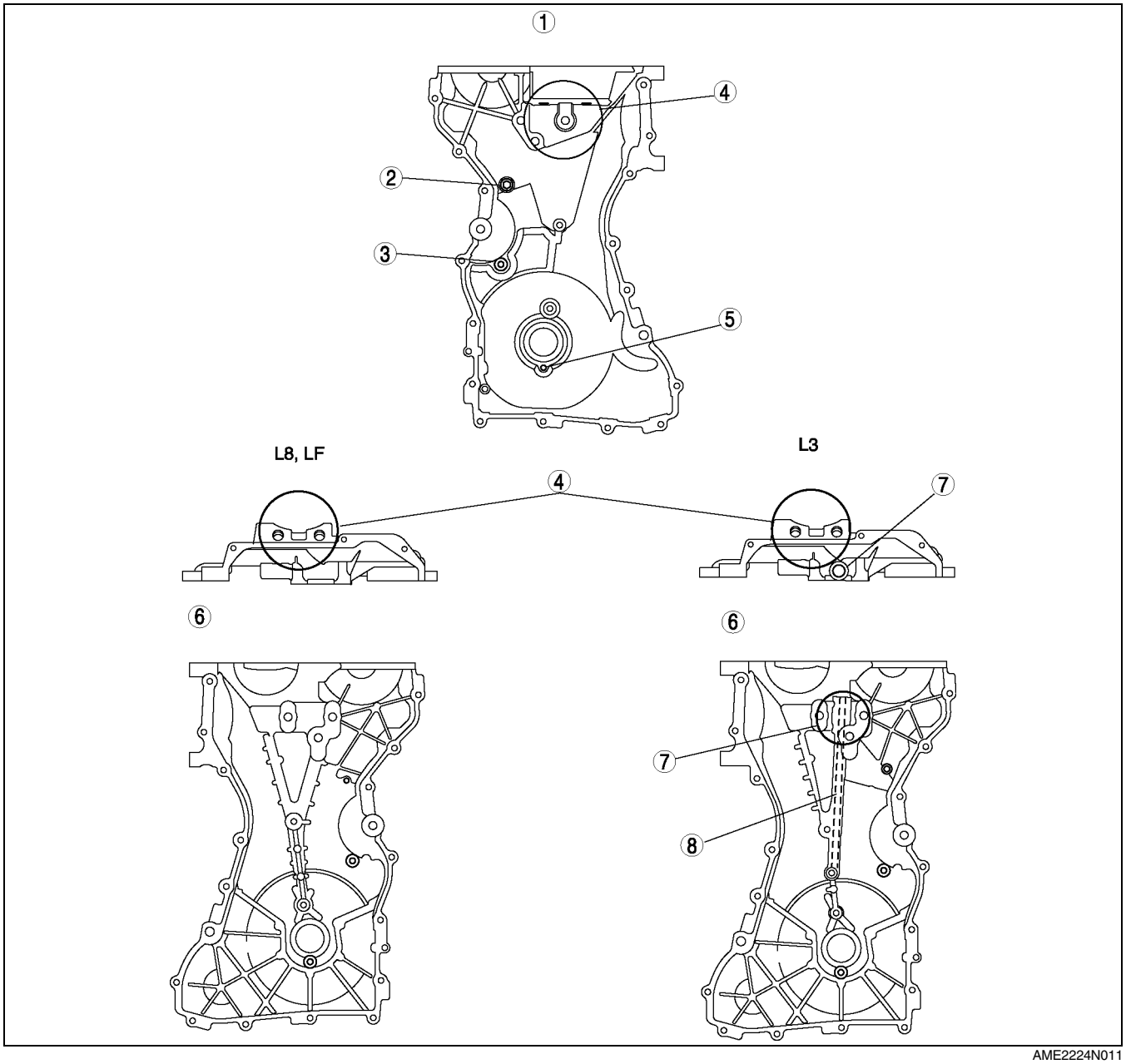

AME2224N011

1	Elevational view
2	Service hole for tensioner arm fixation
3	Service hole for chain tensioner lock release
4	No.3 engine mount bracket

5	Bolt hole crankshaft pulley positioning
6	Back view
7	Oil filter
8	Oil passage to OCV

PISTON, PISTON RING, PISTON PIN

A6E222411010T01

Structure

- The pistons are made of aluminium alloy, which withstands heat and is highly conductive.
- The piston skirt is coated with graphite to reduce friction.
- The offset pistons are used to reduce piston-slapping noise.
- To prevent the piston from being reassembled in the wrong direction, the front mark (←) is on the piston.
- Pistons and connecting rods cannot be disassembled because they are shrinkage fit.
- L3 engine models piston has a valve recess.

Piston Specification.

ITEM		L8	LF	L3
Outer diameter	mm {in}	82.965—82.995 {3.2664—3.2675}	87.465—87.495 {3.4435—3.4435}	87.465—87.495 {3.4435—3.4435}
Offset quantity	mm {in}	0.8 {0.04}	0.8 {0.04}	0.8 {0.04}
Compression height:HC	mm {in}	28.5 {1.122}	28.5 {1.122}	28.5 {1.122}
Piston height: HD	mm {in}	51.0 {2.0078}	51.0 {2.0078}	51.0 {2.0078}

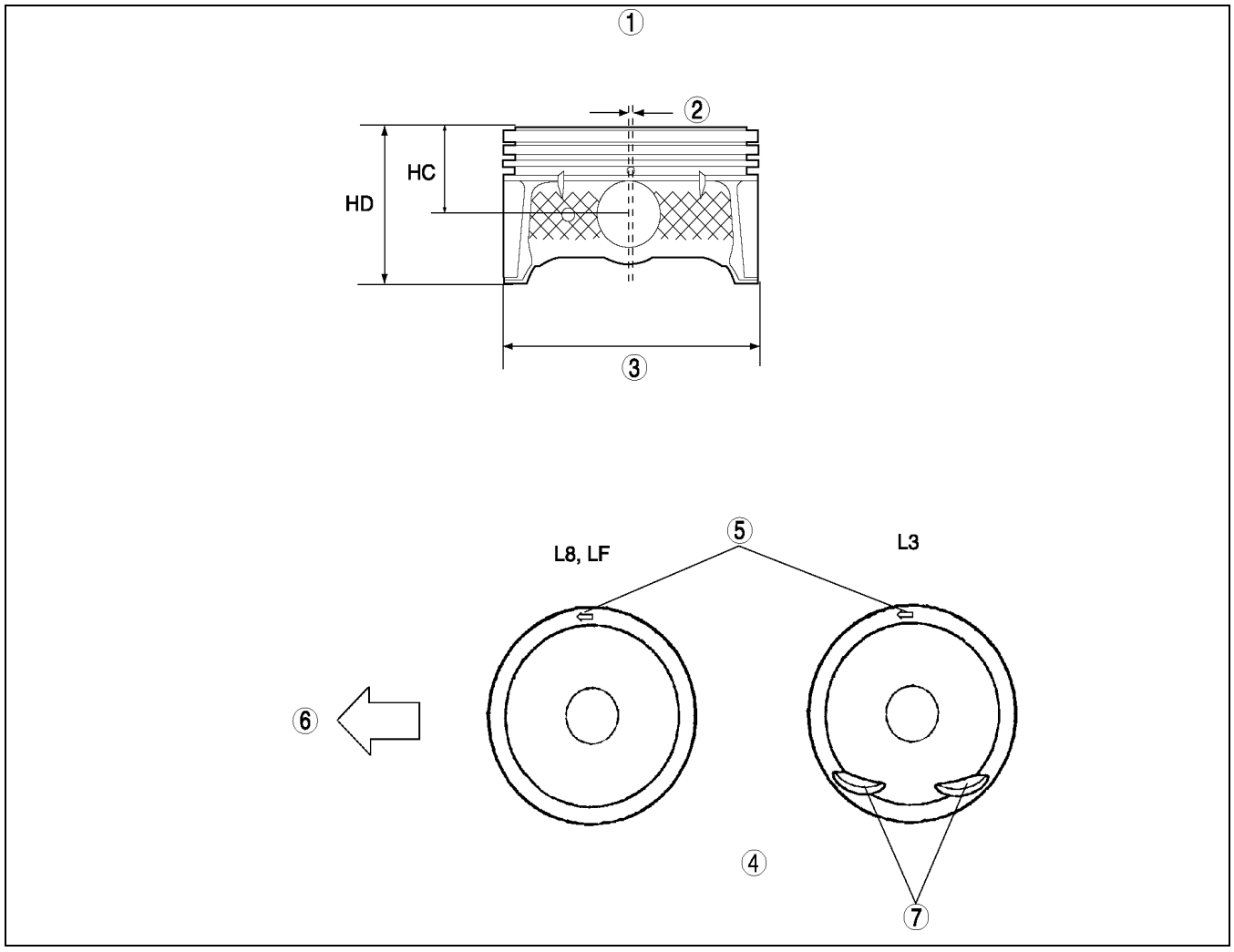

AME2224N008

1	Piston side view
2	Offset
3	Outer diameter
4	Piston upper surface view

5	Install arrow facing engine front
6	Engine front side
7	Valve rises

- The following piston rings are used. Top ring: barrel face ring, Second ring: taper under cut ring, Oil ring: two scuff rings and an expander.
- The piston pin is made of chrome steel alloy, which has superior rigidity.
- The connecting rod and the piston pin are shrinkage fit, and cannot be disassembled.

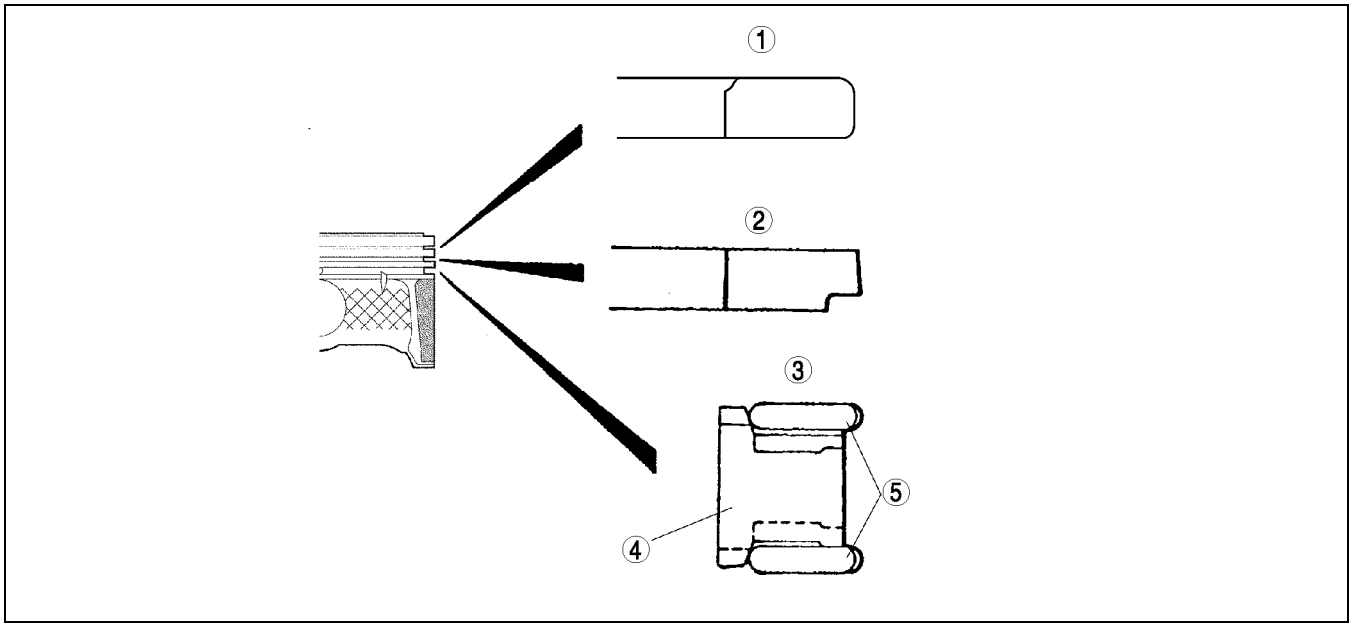

AME2224N009

1	Top ring sectional view
2	Second ring sectional view
3	Oil ring sectional view

4	Side rail
5	Expander

CONNECTING ROD, CONNECTING ROD BEARING

A6E222411211T01

Structure

- Connecting rod is made of structural sintered alloy to improve rigidity.
- The connecting rod, the piston, and the piston pin are shrinkage fit, and cannot be disassembled.
- The connecting rod bolt is the plastic region tightening bolt, which is tightened in two steps to insure a stable axis during tightening.
- The conventional positioning tab has been decommissioned for the connecting rod bearing. When installing the bearing, measure the position of the bearing so that the position gets to the center of the connecting rod and the bearing cap, and install it.
- The big end of the connecting rod and the connecting rod cap were originally formed as a single unit and then it was cut into the connecting rod and the cap. Using the form of the cutting surface, align the connecting rod and the cap.

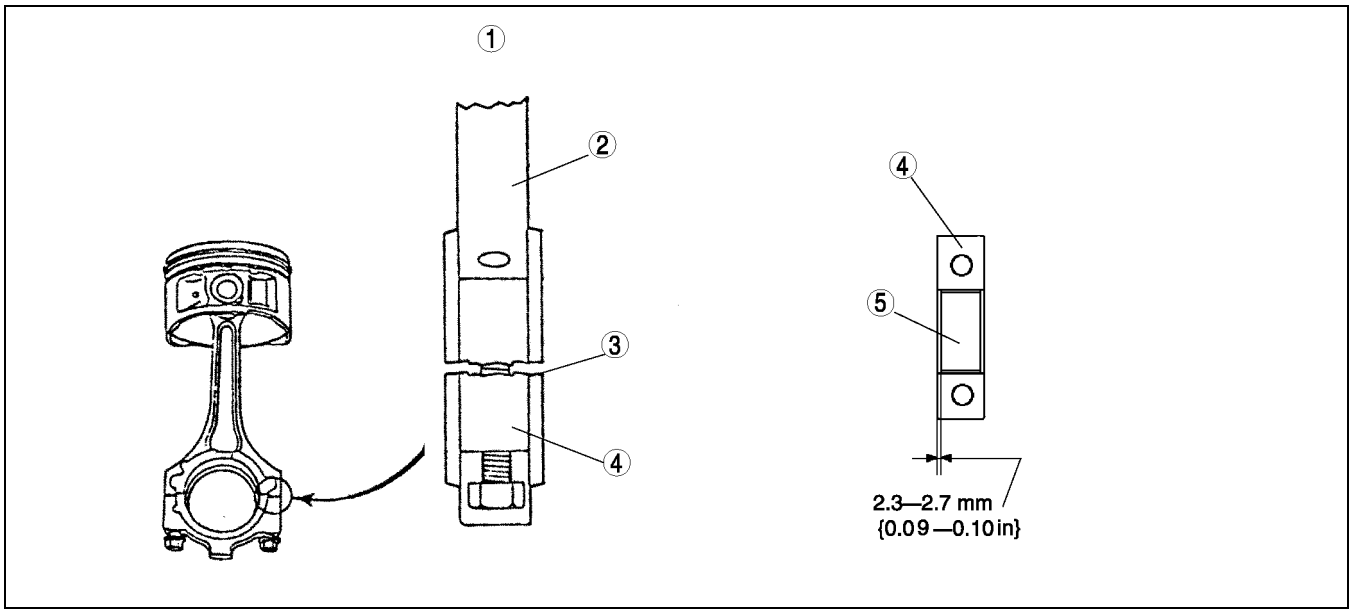

AME2224N010

1	Enlargement

2	Connecting rod

3	Fracture side
4	Connecting rod bearing cap

5	Connecting rod bearing

- The upper lower bearing of the connecting rod bearing is made of aluminum alloy.
- There are three kinds of connecting rod bearings depending on the oil clearance.

Bearing size	Color	Bearing thickness (mm {in})
Standard	Green	1.496—1.502 {0.0589—0.0591}
0.50 {0.02} Oversize	1.748—1.754 {0.0688—0.0690}	
0.25 {0.01} Oversize	1.623—1.629 {0.0639—0.0641}	

DRIVE BELT

A6E222415800T01

Structure

- The drive belt is a serpentine type, which uses a V-ribbed belt to drive the supplemental units. This shortens the length of engine and makes it easier to service.
- The front drive belt's auto tensioner, in which the coil spring is embedded, has been adopted for the drive belt's tension. The tensioner pulley automatically maintains the drive belt's tension.

Drive Belt Specification.

ITEM		L8	LF	L3
Belt length size	mm {in}	About 2,255 {88.78} (About 2,160 {85.04})		About 2,305 {90.75} (About 2,210 {87.01})
Belt width size	mm {in}	About 20.5 {0.81}		

( ) is A/C non-equipping vehicle specification.

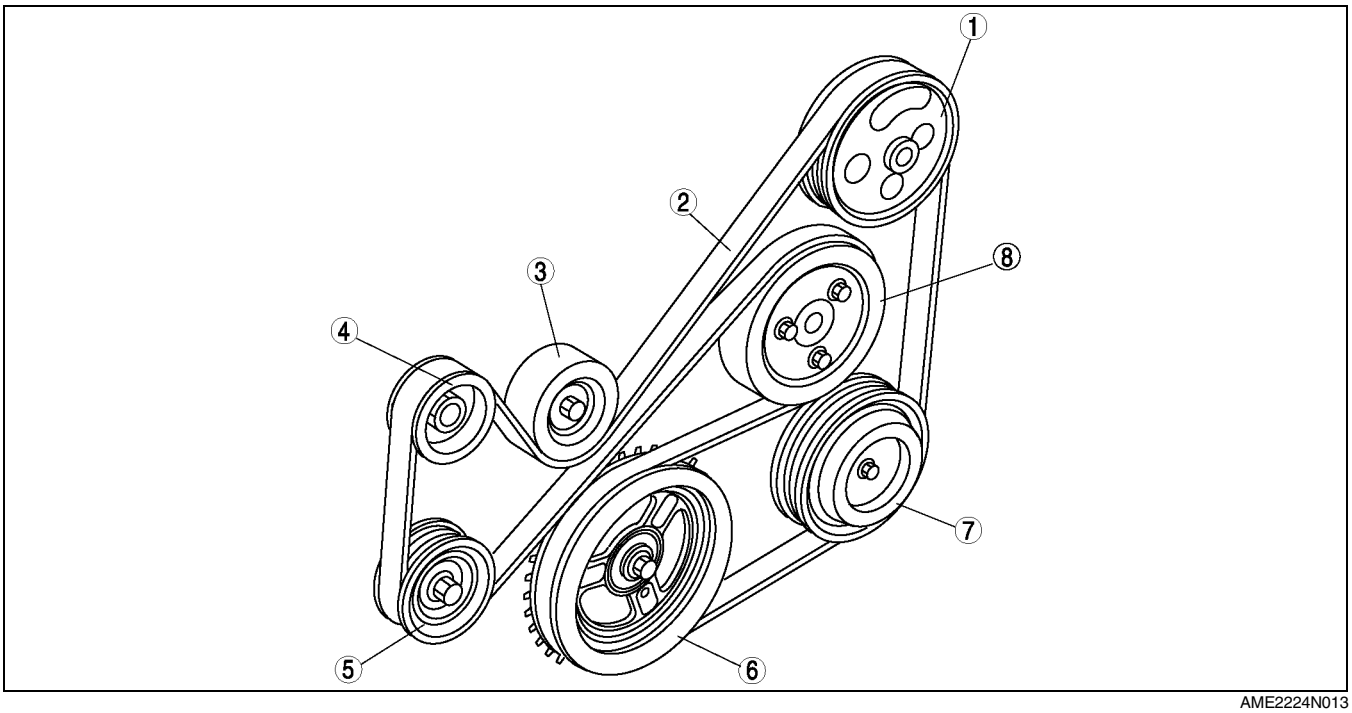

AME2224N013

1	P/S oil pump pulley
2	Drive belt
3	Idler pulley
4	Generator pulley

5	Front drive belt auto tensioner
6	Crankshaft pulley
7	A/C compressor pulley
8	Water pump pulley

ENGINE MOUNT

A6E222439000T03

Outline

- The layout of the engine mounting is pendulum type, which reduces the noise in the cabin.
- The engine supported at three points, and simplification of engine mount composition parts is attained.
- The No.3 engine mounting rubber, which is an oil-filled type, has been adopted to reduce the noise in the cabin.
- The surface of No.3 engine joint bracket and the No.1 engine-mounting rubber is made of aluminum alloy to decrease weight.

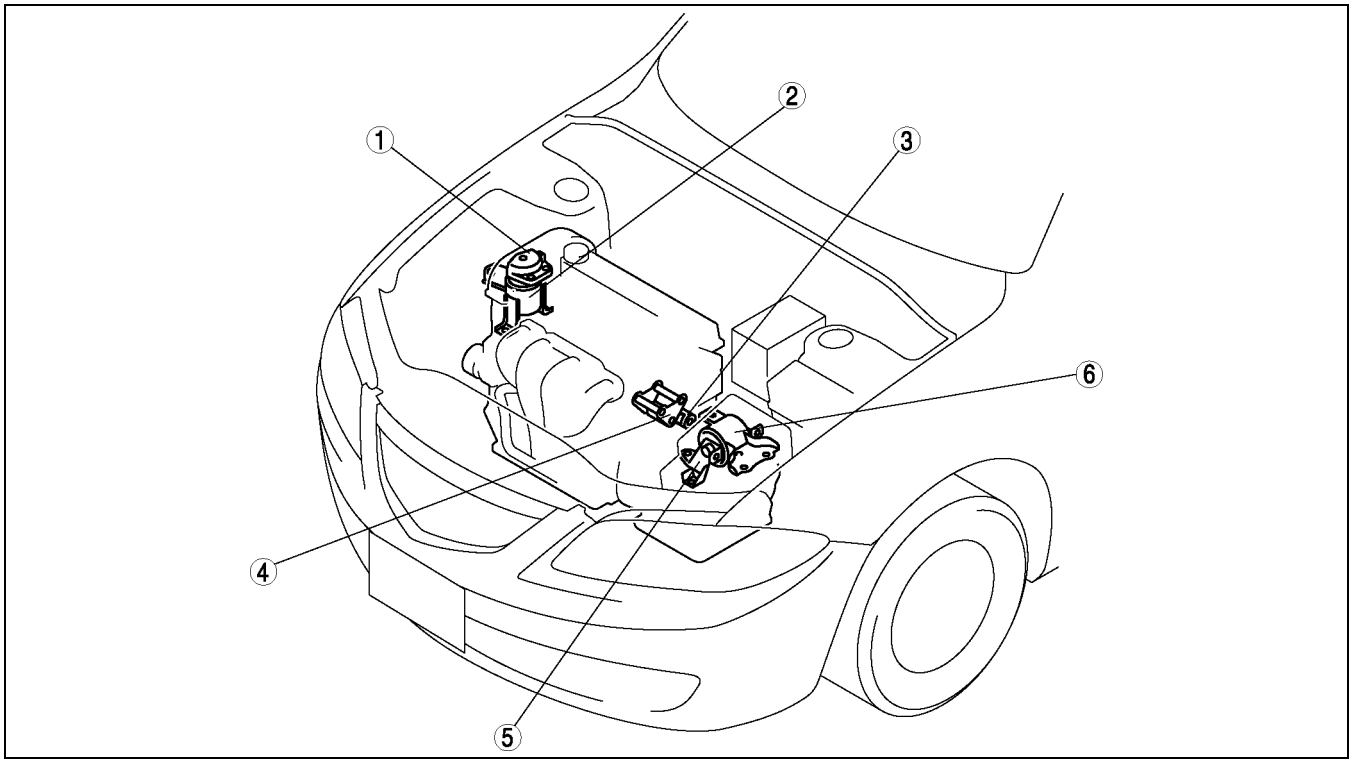

AME2224N014

1	No.3 engine joint bracket
2	No.3 engine mount rubber
3	No.1 engine mount rubber

4	No.1 engine mount bracket
5	No.4 engine mount bracket
6	No.4 engine mount rubber

Structure

- The surface of No.1 engine mounting rubber is made of aluminum alloy. The form is torque rod structure, which regulates the conventional rubber function and the rotation from the power train, and it has a vibration isolator.
- The No.3 engine mounting rubber is oil-filled for noise reduction and vibration isolation.
- The No.3 engine-mounting bracket is integrated with the aluminum alloy engine front cover.

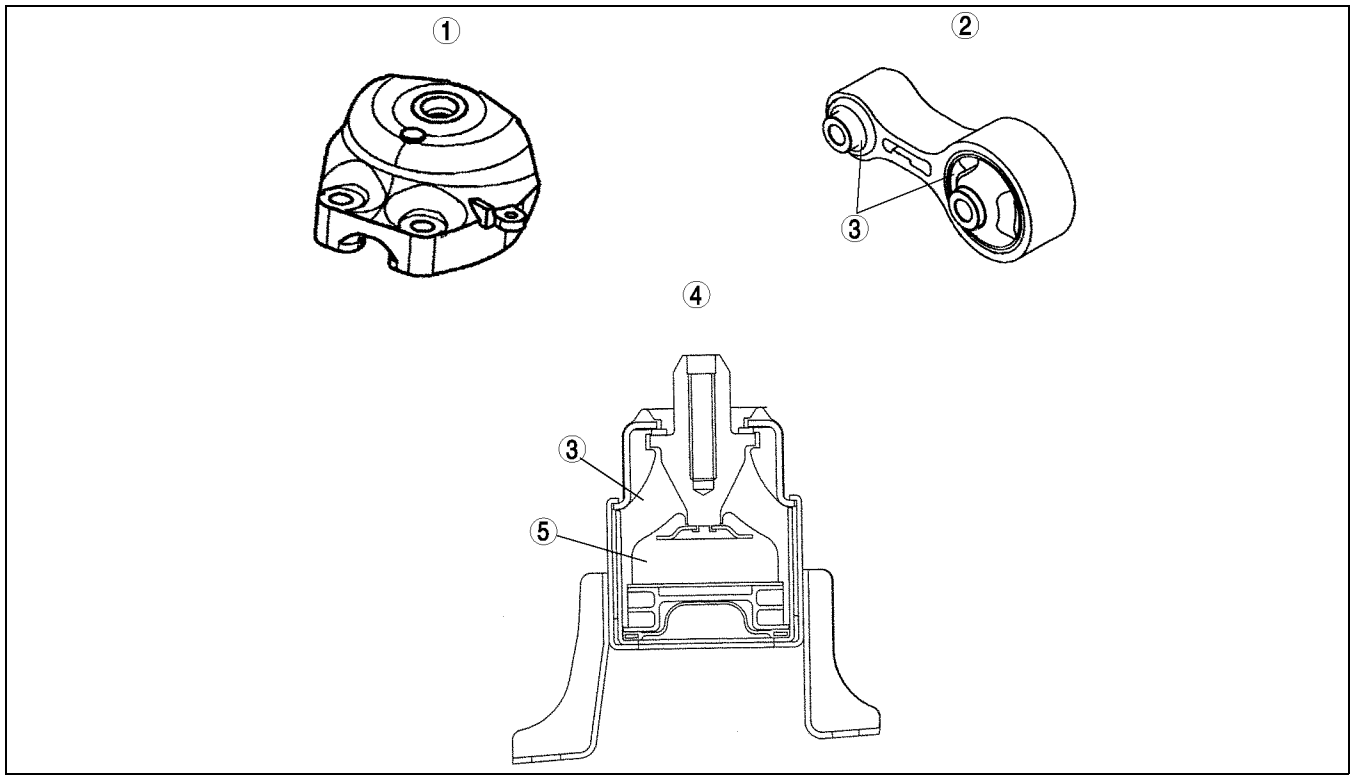

AME2224N015

1	No.3 engine joint bracket
2	No.1 engine mount rubber
3	Rubber part

4	No.3 engine mount rubber sectional view
5	Oil

- The engine is supported at the following three points: front part of the engine (No.3 engine mounting), one side of the transaxle (No.1 engine mounting), and rear upper part of the transaxle (No.4 engine mounting). The supporting point at the side of the tranaxle (No.1 engine mounting) has been set at the transaxle's lowest edge. With this layout, the No.1 engine mounting absorbs the rotation force, generated under the engine torque's fluctuation and transmitted to the power train, and distributes the rotation force to the front and rear part of the engine (pendulum).

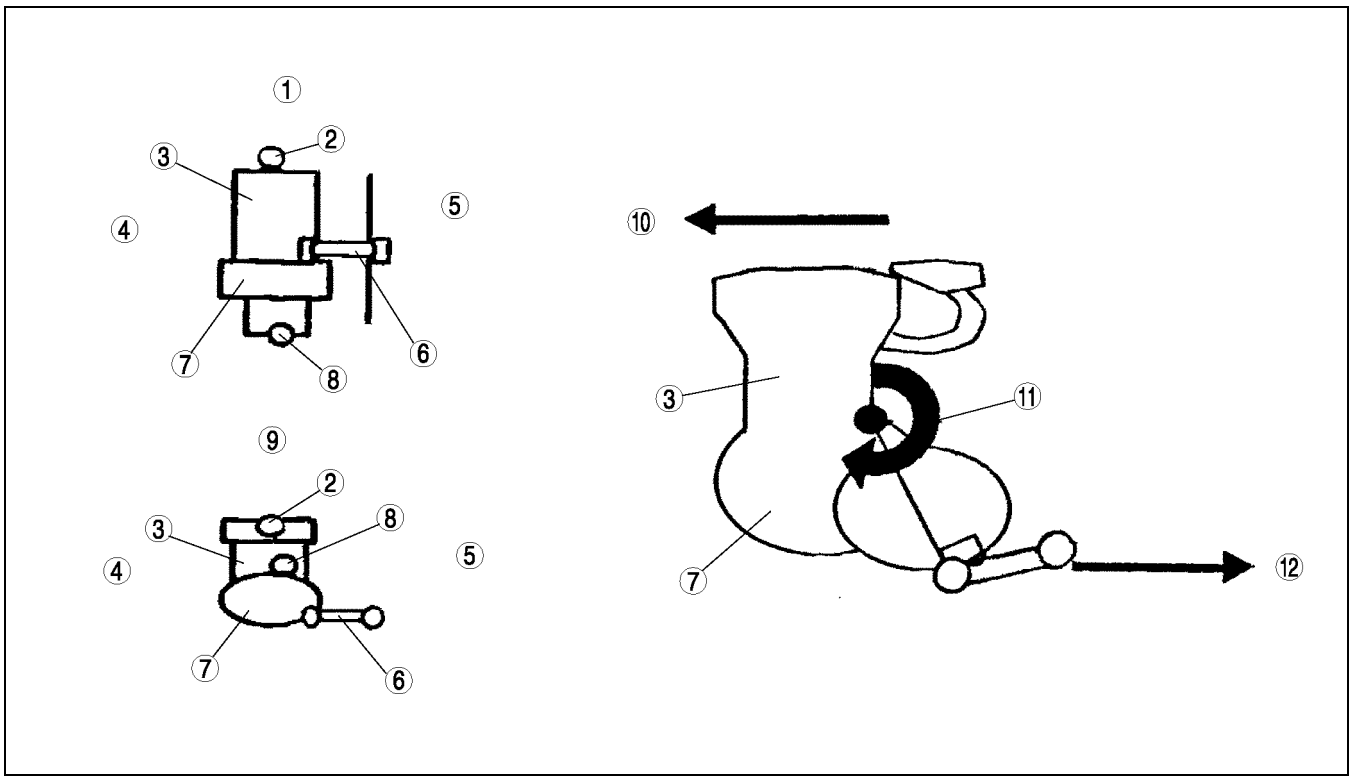

AME2224N016

1	Power train system upper surface
2	No.3 engine mount
3	Engine
4	Vehicle front
5	Vehicle rear
6	No.1 engine mount

7	Transaxle
8	No.4 engine mount
9	Power train system back
10	Engine front
11	Torque
12	Engine back

VALVE MECHANISM

VALVE MECHANISM

A6E221112111T08

Outline

- There are two intake ports and two exhaust ports per No. 1 cylinder. Totally 16 valves are directly driven by two camshafts.
- The variable valve timing mechanism, which insures the best valve timing depending on the drive condition by constantly changing the phase of the intake port side camshaft, has been adopted for the L3 engine models.

Structural view

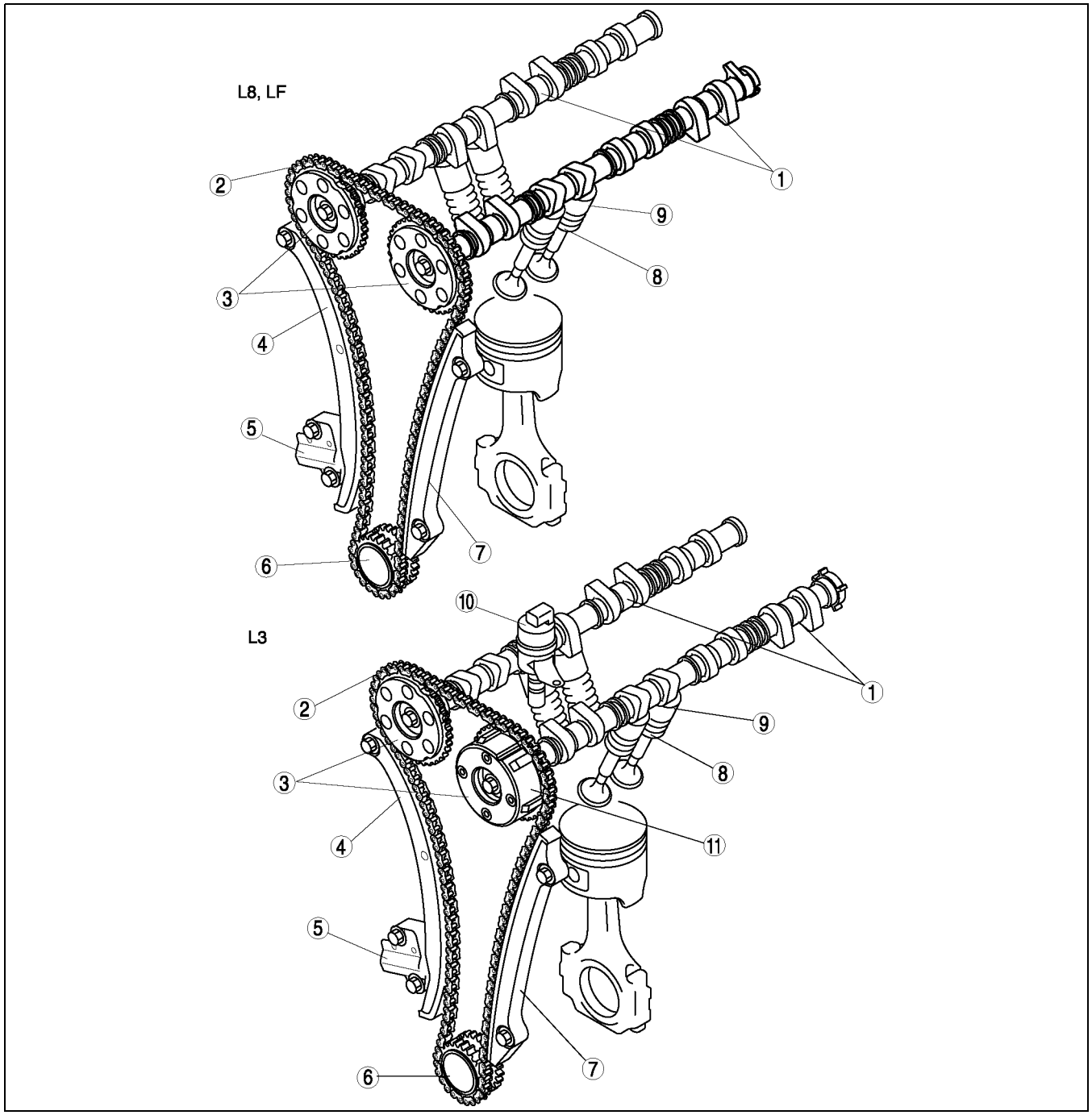

AME2211N001

1	Camshaft
2	Timing chain
3	Camshaft sprocket
4	Tensioner arm
5	Chain tensioner
6	Crankshaft sprocket

7	Chain guide
8	Valve assembly
9	Tappet
10	Oil control valve (OCV)
11	Variable valve timing actuator

CAMSHAFT

A6E221112420T01

Structure

- The cast iron 5 axis-hole, which has great rigidity, has been adopted for the camshaft to insure higher reliability.
- The endplay of the camshaft is regulated at the rear of the No. 1 journal.
- The lubricating oil is supplied through the oil supply hole at each journal. Additionally the cam nose part has been chilled to improve the abrasion resistance and to make the cam hill part lightweight by shortening the width.
- The positioning pin or key slot, which was used when installing the camshaft sprocket to the edge of the camshaft, has been decommissioned. And the lubrication process has been adopted for the camshaft sprocket tightening bolt to prevent instability in the axis during tightening.
- There is an oil line, by which the oil is supplied to the variable valve timing actuator, located at the L3 engine models intake port side camshaft (front of camshaft).

Camshaft Specification.

ITEM		L8		LF		L3	
		IN	EX	IN	EX	IN	EX
LIFT	(mm{in})	7.5 {0.29}	7.7 {0.30}	8.8 {0.34}	7.7 {0.30}	9.1 {0.35}	7.8 {0.31}
Overlap	(°)	8		8		30	

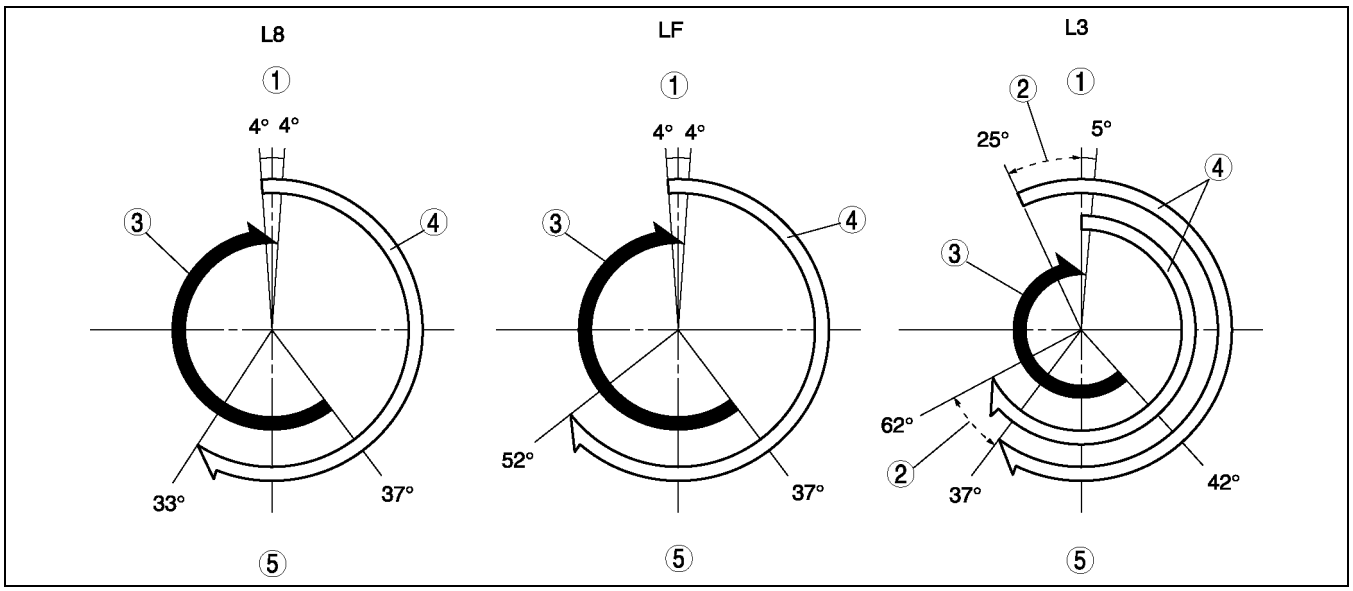

AME2211N004

1	TDC
2	Variable domain
3	EX

4	IN
5	BDC

- The detection unit or the camshaft position (CMP) sensor, which is integrated with the camshaft, is at the intake port side camshaft for L8 engine models and LF engine models.
- The detection unit (trigger plate) for the camshaft position (CMP) sensor is at the intake port side camshaft for L3 (with variable valve timing mechanism) engine models.
- The groove for securing the No.1 TDC for the camshaft, is provided at the rear of the intake and exhaust camshaft.

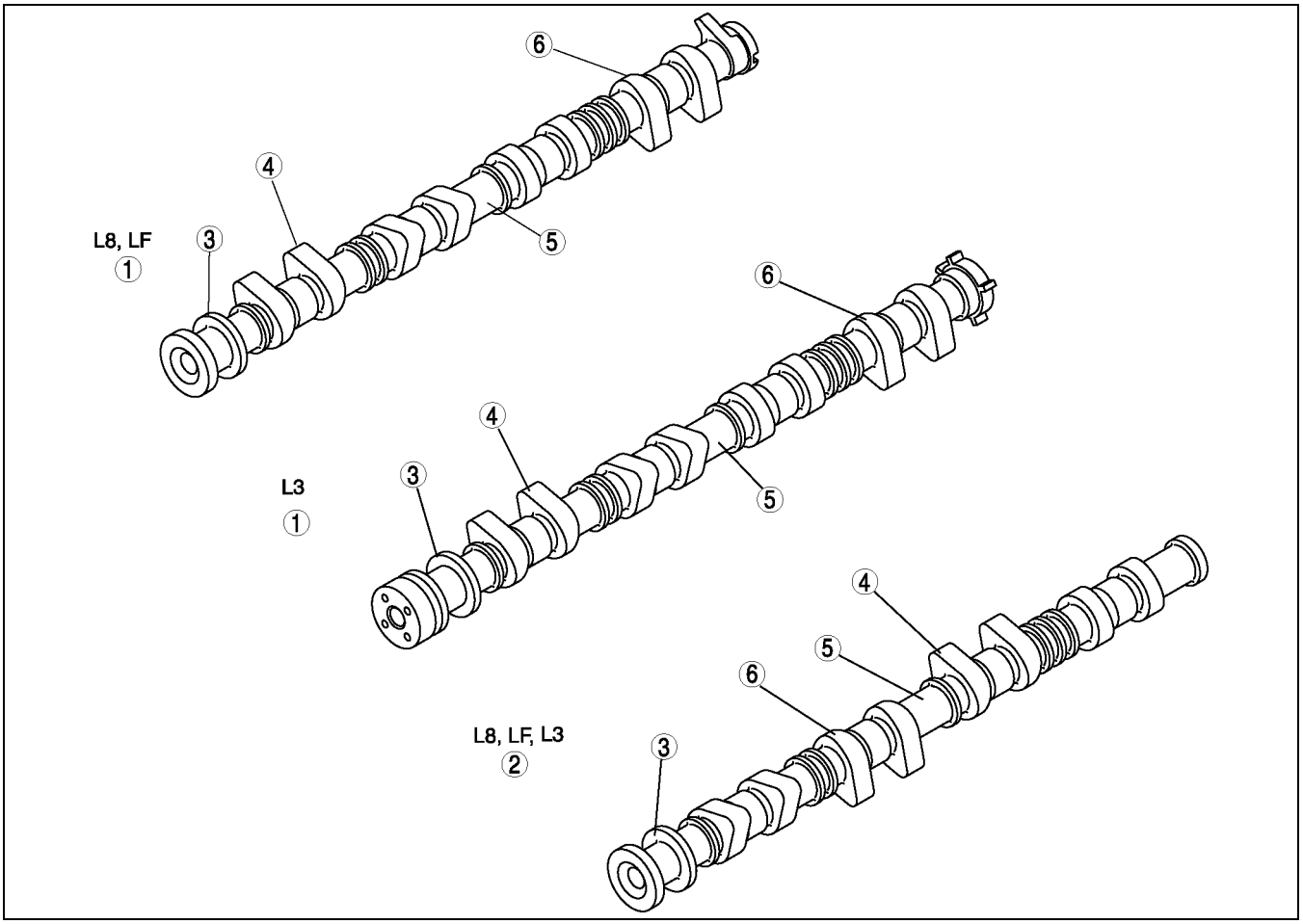

AME2211N005

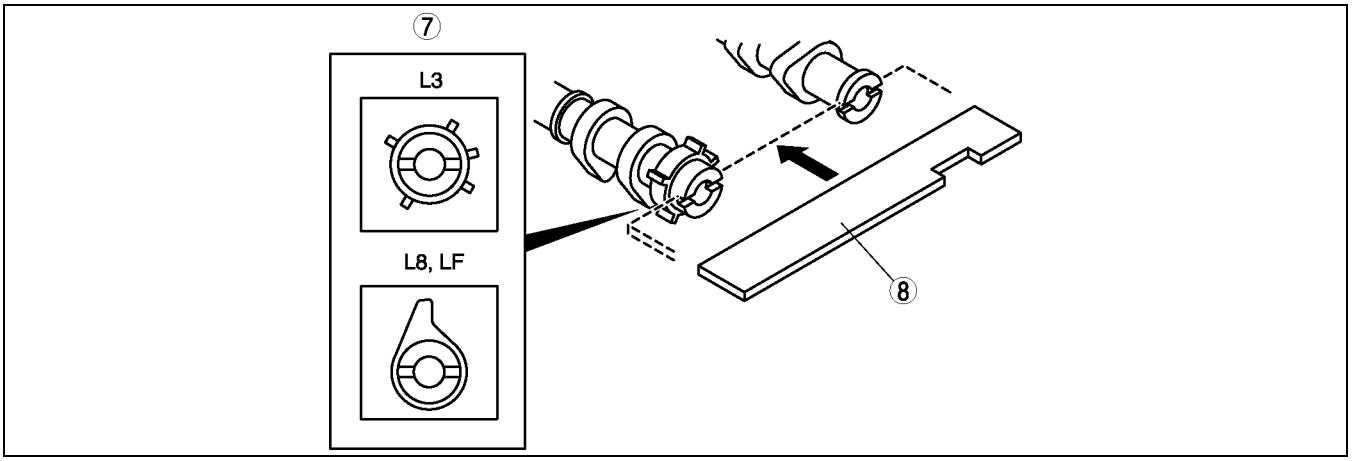

AME2211N006

1	Intake camshaft
2	Exhaust camshaft
3	Thrust
4	Cam nose

5	Cam journal
6	Cam heel
7	Detection part for CKP sensors
8	SST

CAMSHAFT SPROCKET

A6E221112420T02

Structure

- The sintered alloy, which has high rigidity, has been adopted for the camshaft sprocket and has been quenched to improve the abrasion resistance at the contact point with the timing chain.
- L3 engine models intake port side camshaft sprocket is integrated (cannot be disassembled) with the variable valve timing actuator.

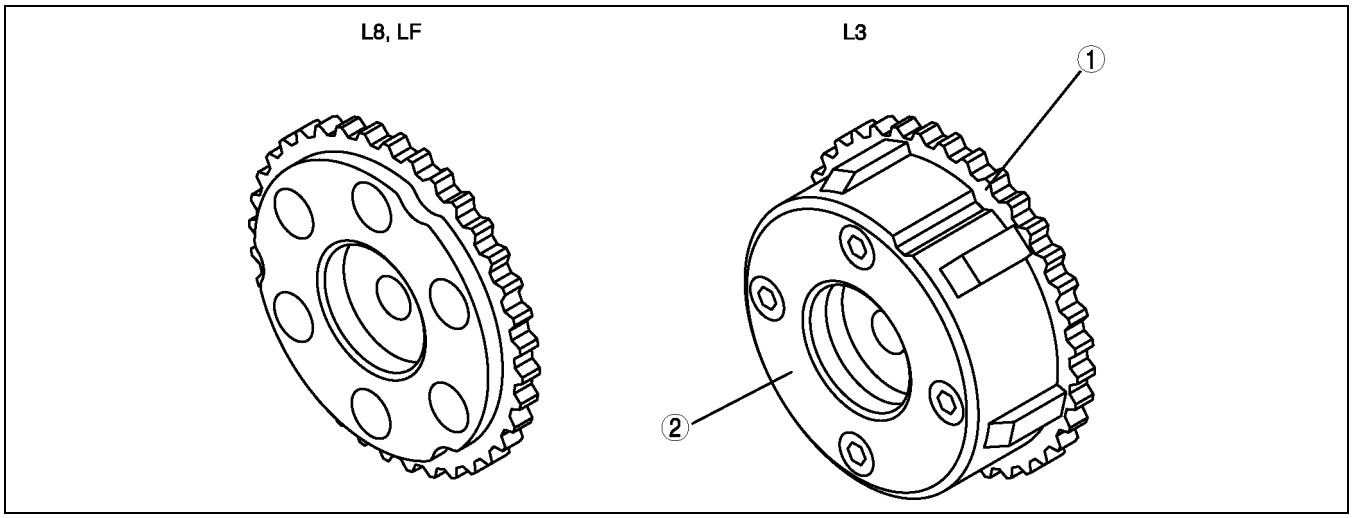

AME2211N009

1	Camshaft sprocket
2	Variable valve timing actuator

CRANKSHAFT SPROCKET

A6E221112420T03

Structure

- High-strength chromium steel has been adopted for the crankshaft sprocket. Due to carburizing protection, abrasion resistance at all chain contact points is increased.
- The crankshaft sprocket consists of the timing chain sprocket and oil pump sprocket, which have been integrated into a single unit.
- The keyway on the crankshaft sprocket, used to position the crankshaft during installation, has been eliminated.

Timing Drive Sprocket Specification.

ITEM	L8	LF	L3
Outer diameter (mm {in})	About 47.955 {1.8880}		About 48.495 {1.9093}
Tooth width (mm {in})	About 7.35 {0.289}		About 8.03 {0.316}

Oil Pump Drive Sprocket Specification.

ITEM	L8	LF	L3
Outer diameter (mm {in})	About 47.955 {1.8880}		About 48.495 {1.9093}
Tooth width (mm {in})	About 6.15 {0.242}		About 5.93 {0.242}

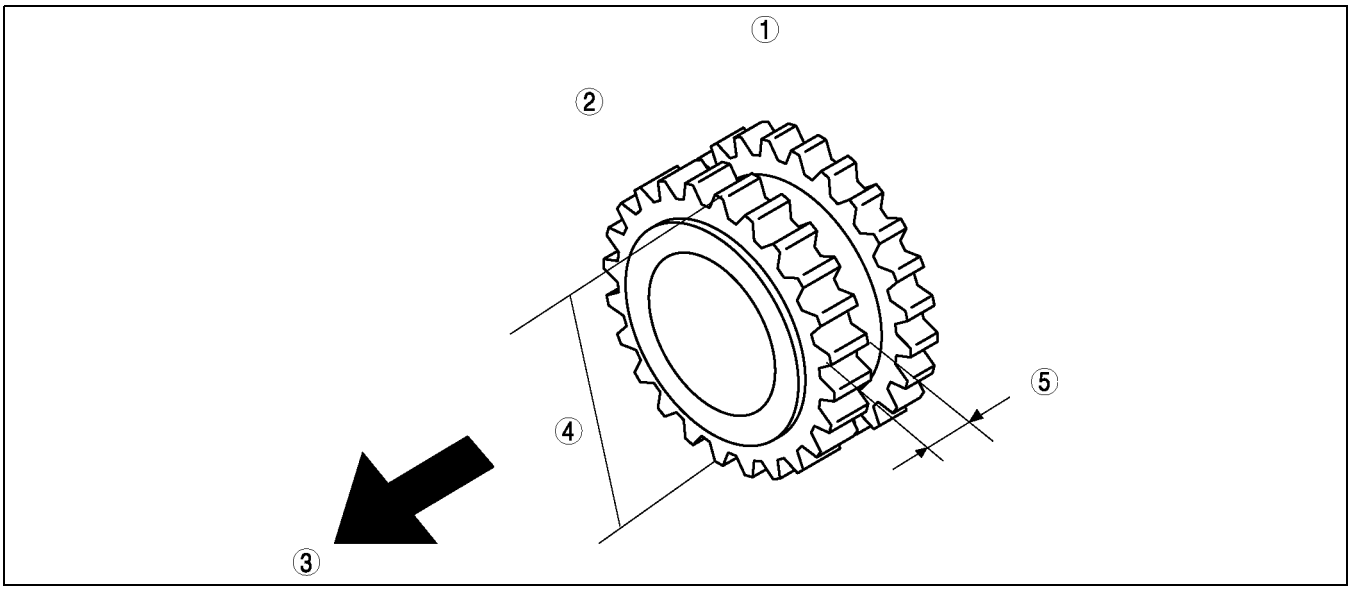

AME2211N010

1	Oil pump drive sprocket
2	Timing chain drive sprocket
3	Engine front

4	Outer diameter
5	Tooth width

TIMING CHAIN, CHAIN TENSIONER

A6E221112040T01

Structure

- The timing chain is the silent chain (link grounding type), by which the tapping noise caused by matching each sprocket is reduced.
- Engine oil inside the engine front cover lubricates the timing chain and each sprocket. The pin part of the timing chain is nitrite-treated to improve abrasion resistance.

Timing Chain Specification.

ITEM	L8	LF	L3
Pitch size (mm {in})	8 {0.32}		6.35 {0.25}
Pitch number	134		174

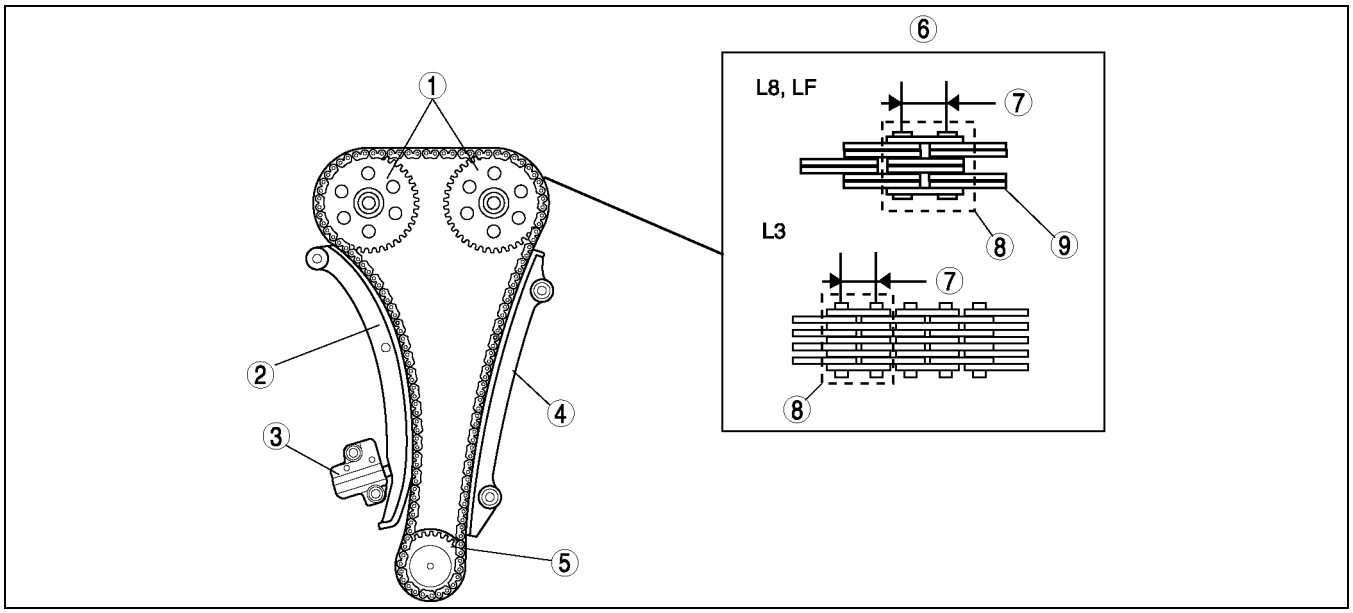

AME2211N002

1	Camshaft sprocket
2	Tensioner arm
3	Chain tensioner
4	Chain guide
5	Crankshaft sprocket

6	Timing chain
7	Pitch size
8	Pitch
9	Link

- The timing chain tensioner is the oil pressure type chain tensioner. The tension of the timing chain is kept constant, using the oil pressure and the spring force in the chain tensioner.
- The tension of the timing chain is kept constant by the oil pressure and the piston spring force.
- The oil pressure type chain tensioner is configured with the following parts: Piston spring, which depresses the tensioner arm, Check ball which maintains pressing in the tensioner arm.

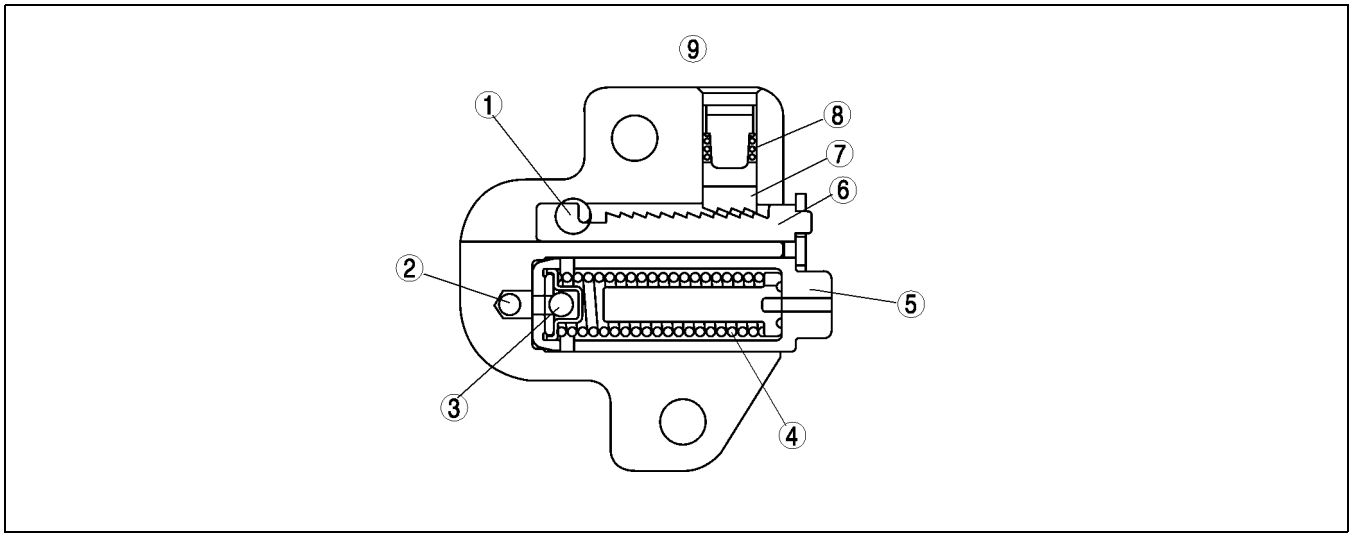

AME2211N003

1	Hole for a rachet lock
2	Oil supply hole
3	Check ball
4	Piston spring
5	Piston

6	Rack
7	Ratchet
8	Ratchet spring
9	Cross-section

VALVE, VALVE SPRING, VALVE SEAL, VALVE GUIDE

A6E221112111T02

Structure

- The valves are heat-resistant steel. There are two intake valves, two exhaust valves per No.1 cylinder.

VALVE SPEC.

ITEM		L8	LF	L3
Valve full length	(mm {in})	Intake valve: About 101.6 {4.000} Exhaust valve: About102.6 {4.039}		
Intake valve umbrella diameter	(mm {in})	About 32.5 {1.28}	About 35 {1.38}	
Exhaust valve umbrella diameter	(mm {in})	About 28 {1.10}	About 30 {1.18}	
Stem diameter	(mm {in})	Intake valve: About 5.5 {0.22} Exhaust valve: About 5.5 {0.22}		

- The intake valve and the exhaust valve are treated with the tufftride process to improve abrasion resistance.
- The valve spring is an uneven outer dimension type. It has been improved by reducing the size of the upper seat.
- The valve guide is made of the sintered alloy to improve abrasion resistance.
- The valve seat is integrated with the lower valve spring seat to simplify the unit and improve its serviceability.

1	Valve keeper
2	Upper valve spring seat
3	Valve spring
4	Valve seal
5	Valve guide
6	Valve

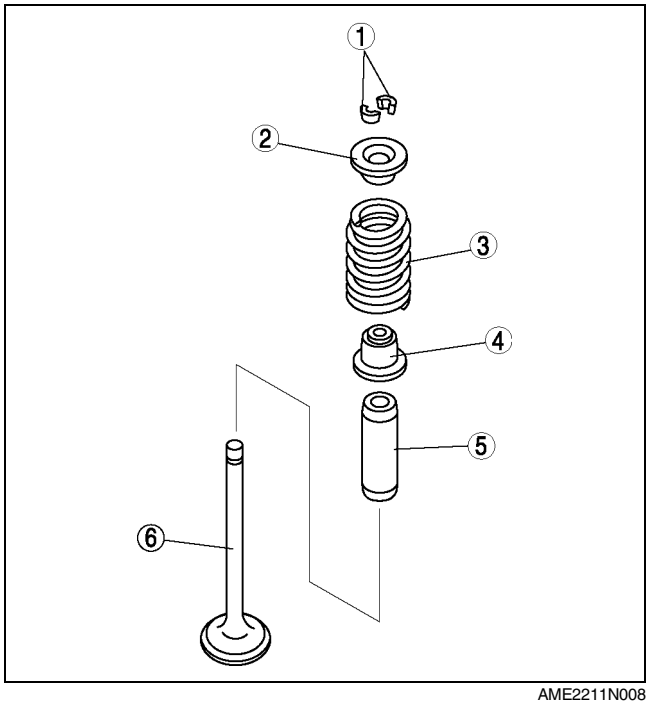

AME2211N008

TAPPET

A6E221112111T03

Structure

- The tappet is a shimless tappet which is integrated with the shim.
- Besides the tappet, the grounding surface of the cam is phosphate-coated to smooth the surface and improve abrasion resistance.
- To adjust the valve clearance, replace the tappet. There are 35 kinds of tappets depending on the thickness. To distinguish the difference, check the engraved identification mark (3 digits).

Tappet Specification.

Discernment mark	Tappet thickness (mm {in})	The number of jumps (mm {in})
725—625	3.725—3.625 {0.1467—0.1427}	0.025 {0.00098}
602—122	3.602—3.122 {0.1418—0.1229}	0.02 {0.00078}
100—000	3.100—3.000 {0.1220—0.1181}	0.025 {0.00098}

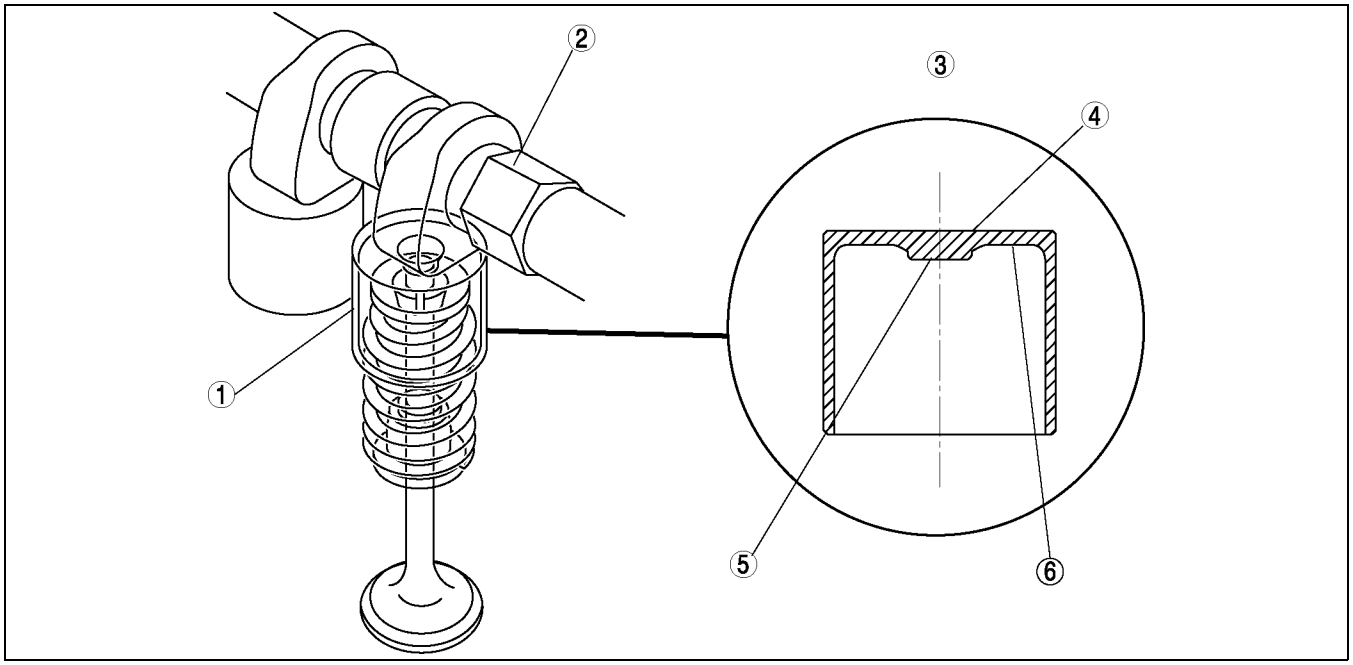

AME2211N007

1	Tappet
2	Camshaft
3	Tappet sectional view

4	Cam lob contact surface
5	Valve stem contact surface
6	Identification mark position

VALVE MECHANISM

A6E221112111T07

Outline

- A variable timing mechanism, which realizes optimum valve timing according to engine operation conditions by continuously modifying the phases of the intake camshaft and crankshaft, has been adopted.

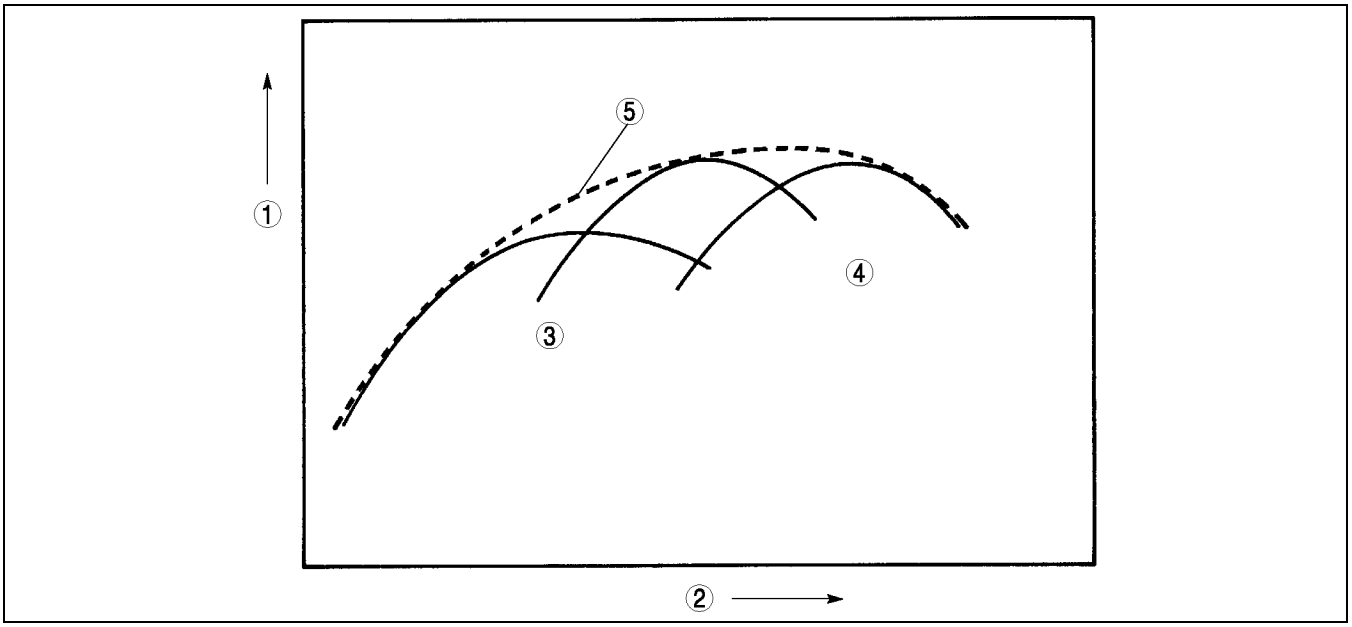

AME2211N013

1	Torque
2	Engine speed
3	Low-middle speed engine

4	High speed engine
5	Engine with variable valve timing mechanism

Variable Valve Timing Mechanism

Function

- The variable valve timing mechanism continuously modifies the phases of the variable valve timing actuator and the intake camshaft using hydraulic pressure controlled by the oil control valve (OCV) so that optimal valve timing is obtained according to engine operation conditions.
- The oil control valve (OCV) operation is based on signals from the PCM according to engine operation conditions and it controls hydraulic pressure to the variable valve timing actuator.

Operation and purpose according to driving condition

Idling range, light load range

- Due to a reduction in the amount of overlap, less combusted gas is returned to the intake port. This stabilizes idle speed in the idling range, improving fuel economy, and also ensures engine stability in the light load range.

Medium load range

- Overlap amount has been increased and the EGR ratio inside the cylinder is higher. This reduces engine friction loss (pumping loss), lowering the combustion temperature and reducing the amount of NOx the in exhaust gas. The amount of hydrocarbon emission has also been reduced through reignition of non-combusted gas.

Heavy load, low-middle speed range

- The intake valve is closed early, and high volumetric efficiency is obtained to improve low-middle speed torque.

Heavy load, high speed range

- Timing for intake valve closure is delayed and high volumetric efficiency is obtained to improve maximum output.

When temperature is low

- The overlap amount has been minimized to prevent combusted gas from returning to the intake port and to reduce the additional fuel injection amount. This improves fuel economy and stabilizes fast idle speed.

When engine is started or stopped

- Startability has been improved because the overlap amount has been minimized to prevent combusted gas from returning to the intake port.

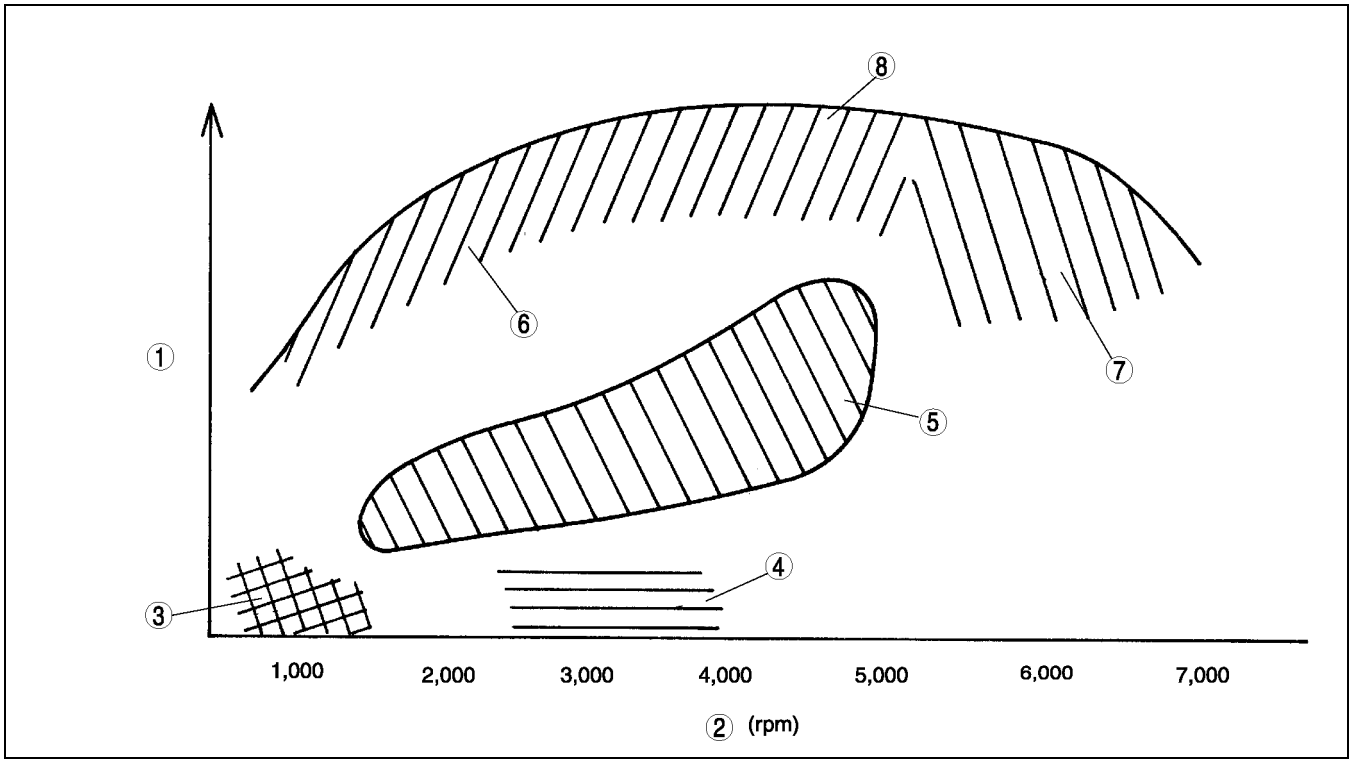

AME2211N014

1	Load
2	Engine speed
3	Idling range
4	Light load range

5	Medium load range
6	Heavy load, low-middle speed range
7	Heavy load, high speed range
8	Full load performance

Construction

- The variable valve timing mechanism consists of a variable valve timing actuator, oil control valve (OCV), CKP sensor, CMP sensor, and the PCM.

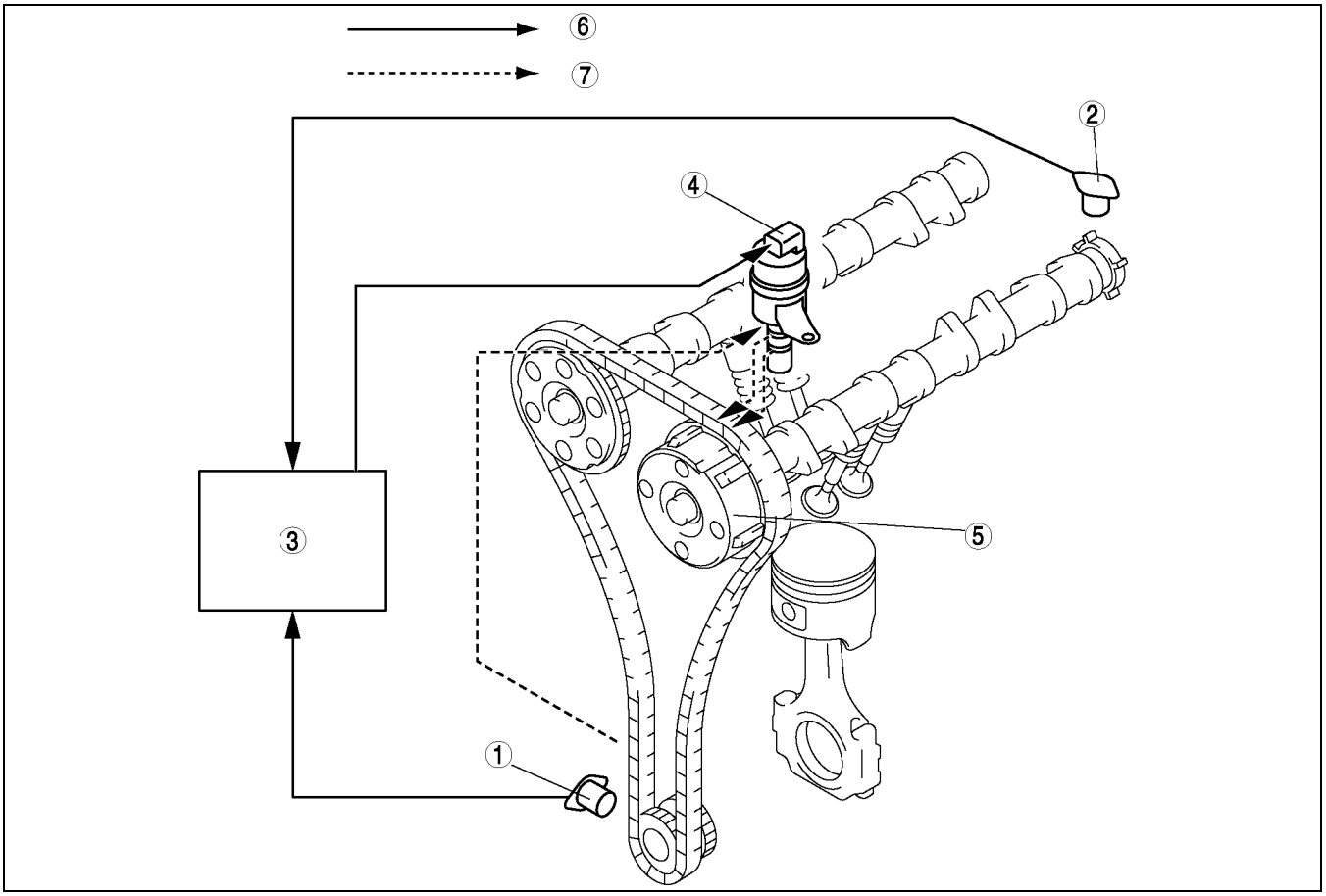

AME2211N015

1	CKP sensor
2	CMP sensor
3	PCM
4	Oil control valve (OCV)

5	Variable valve timing actuator
6	Electric signal
7	Hydraulic pressure

Hydraulic Pressure Flow Diagram

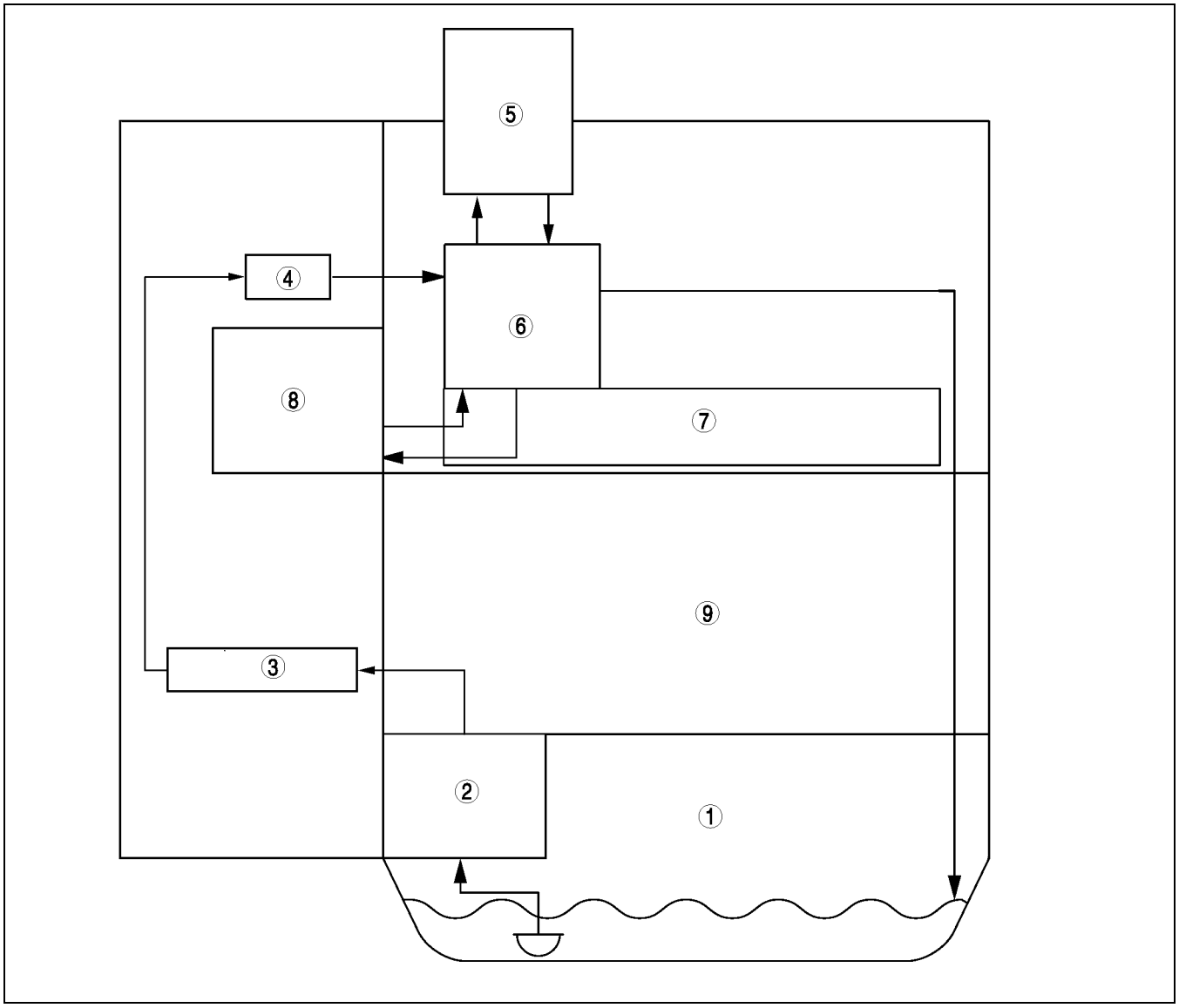

AME2211N016

1	Oil pan
2	Oil pump
3	Oil pipe
4	Oil filter
5	Oil control valve (OCV)

6	Oil control valve (OCV) adapter
7	Camshaft
8	Variable valve timing actuator
9	Cylinder block

Component and function

Variable valve timing actuator	• Continuously modifies the phases of the intake camshaft and crankshaft at the forward end of the intake camshaft using hydraulic pressure from the oil control valve (OCV).
Oil control valve (OCV)	• Operated by current (duty signal) from the PCM. Switches the hydraulic oil passages to the variable valve timing actuator.
CKP sensor	• Inputs engine revolution signal to the PCM.
CMP sensor	• Inputs cylinder identification signal to the PCM.
PCM	• Controls the oil control valve (OCV) so that optimum valve timing is obtained according to engine operation conditions.

Operation outline

- The variable valve timing actuator has two hydraulic chambers: a valve timing advance chamber and a valve timing retard chamber. They are located between the integrated housing of the camshaft sprocket and the camshaft integrated rotor. The oil pump supplies engine oil. to each chamber. Hydraulic pressure applied to each chamber is controlled by the oil control valve (OCV) and the relative phases of the camshaft sprocket and the camshaft are modified to obtain optimum valve timing according to engine operation conditions.

At engine start

- When the stopper pin in the variable valve timing actuator engages with the rotor, which is at the position of maximum valve timing retard due to spring force, the camshaft sprocket and the camshaft rotate as one unit. When the oil pump pressure rises and the stopper pin is disengaged, it becomes possible to modify the relative angles of the camshaft sprocket and the camshaft.

Advancing valve timing

- When the spool valve in the oil control valve (OCV) moves to the left according to the PCM signal, hydraulic pressure, from the oil pump, feeds into the valve timing advance passage and finally to the valve timing advance chamber in the variable valve timing actuator. Then, the rotor integrated with the camshaft rotates in the valve timing advance direction, against the housing driven by the crankshaft, and the valve timing is advanced.

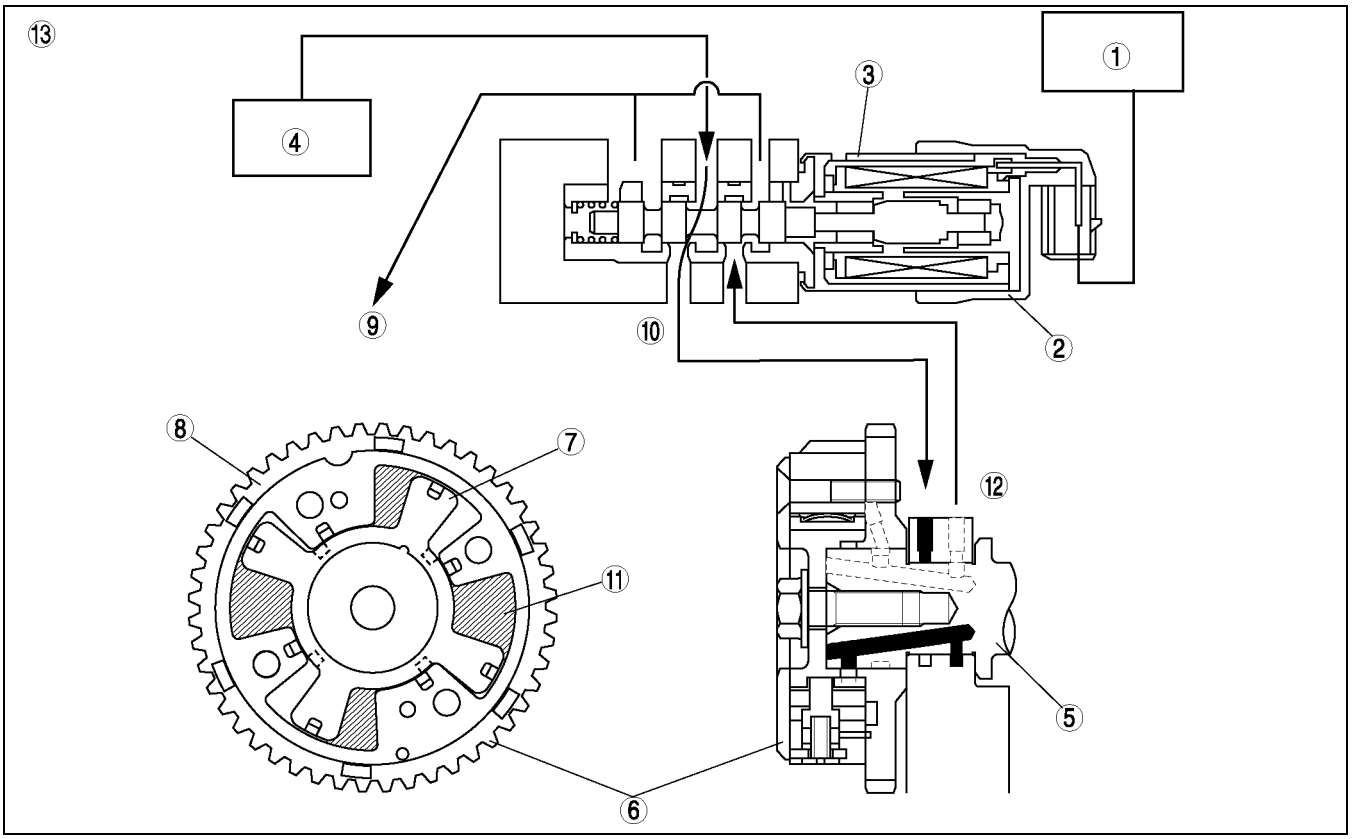

AME2211N017

1	PCM
2	Oil control valve (OCV)
3	Spool valve
4	Oil pump
5	Camshaft
6	Variable valve timing actuator
7	Rotor

8	Housing
9	Oil pan
10	To valve timing advance chamber
11	Valve timing advance chamber
12	From valve timing retard chamber
13	Hydraulic pressure flow

Retarding valve timing

- When the spool valve in the oil control valve (OCV) moves to the right according to the PCM signal, hydraulic pressure, from the oil pump, feeds into the valve timing retard passage and finally to the valve timing retard chamber in the variable valve timing actuator. Then, the rotor integrated with the camshaft rotates in the valve timing retard direction, against the housing driven by the crankshaft, and valve timing is retarded.

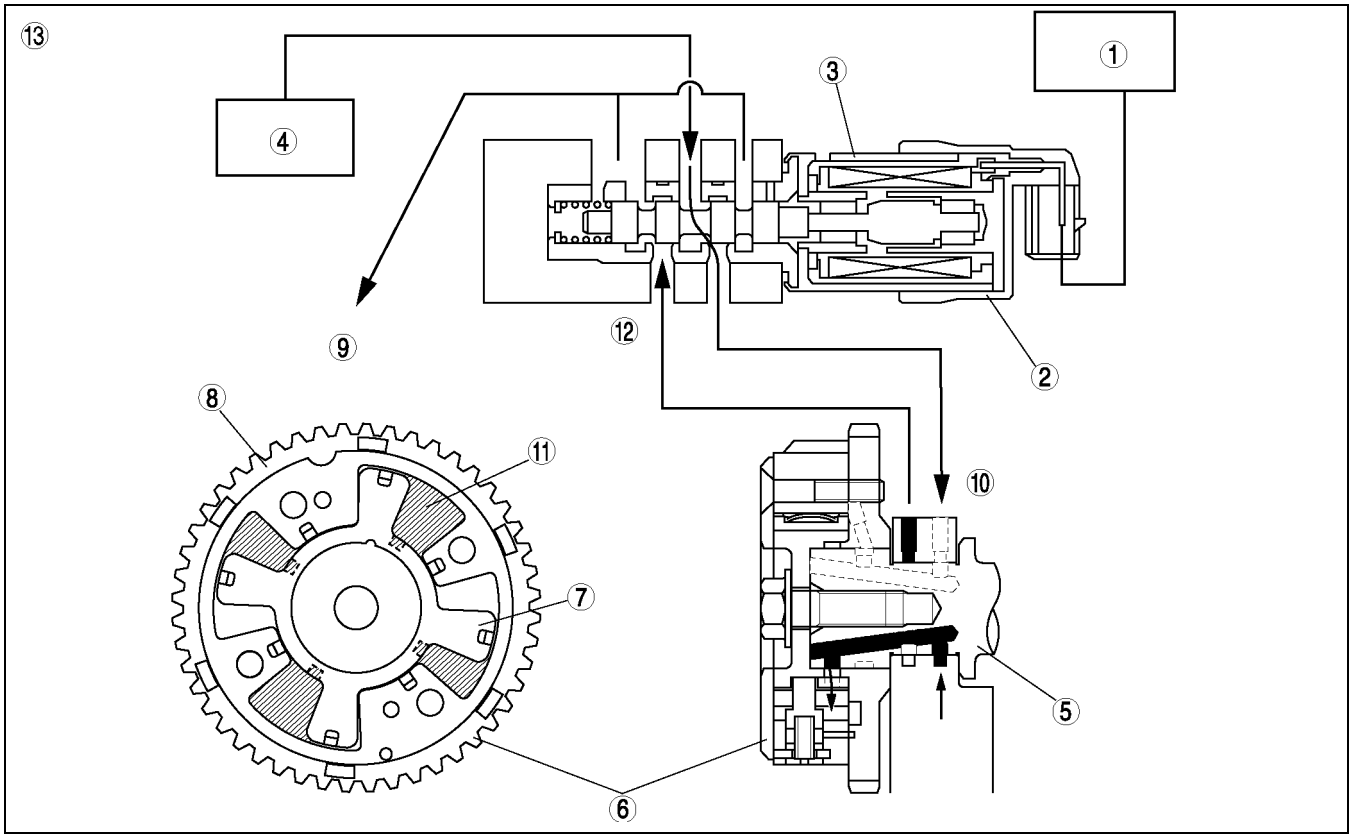

AME2211N018

1	PCM
2	Oil control valve (OCV)
3	Spool valve
4	Oil pump
5	Camshaft
6	Variable valve timing actuator
7	Rotor

8	Housing
9	Oil pan
10	To valve timing retard chamber
11	Valve timing retard chamber
12	From valve timing advance chamber
13	Hydraulic pressure flow

Maintaining intermediate valve timing

- The spool valve in the oil control valve (OCV) is located near the middle of the valve timing advance and retard positions. Because of this, hydraulic pressures are maintained in both valve timing advance and retard chambers of the variable valve timing actuator. At the same time, relative angles of the rotor and the housing are fixed and maintained, resulting in fixed valve timing.

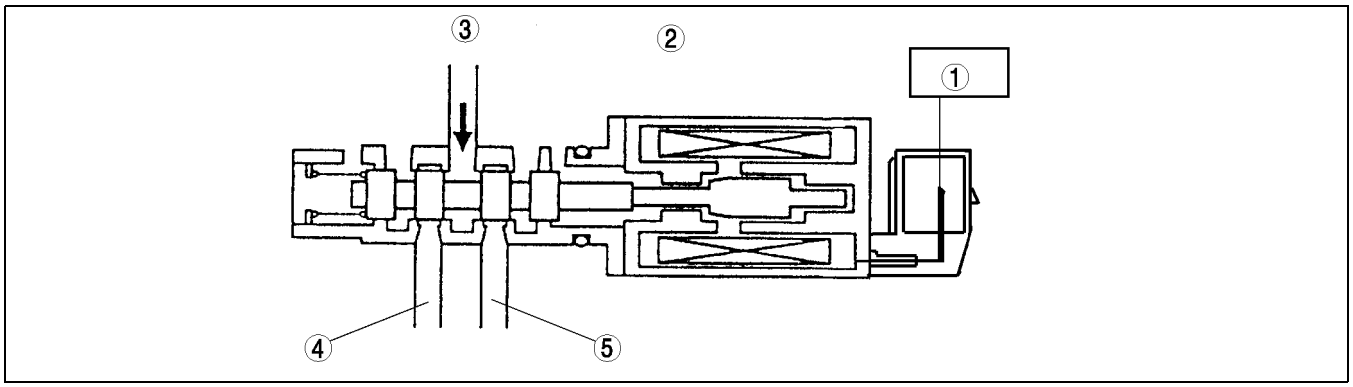

AME2211N019

1	PCM
2	Oil control valve (OCV)
3	Oil pump

4	To valve timing advance chamber
5	To valve timing retard chamber
6	Hydraulic pressure flow

VARIABLE VALVE TIMING ACTUATOR

A6E221112111T05

- The variable valve timing actuator consists of the following: a housing case integrated to the camshaft sprocket, a cover, a camshaft integrated rotor, and a stopper pin that retains the rotor and case when the engine stops. Also, the rotor has a chip seal that seals the valve timing advance chamber and the valve timing retard chamber.
- The cover and rotor of the variable valve timing actuator are notched, and are used as alignment marks when inspecting the variable valve timing actuator.

1	Camshaft sprocket
2	Case
3	Rotor
4	Stopper pin
5	Tip seal
6	Cover
7	Notch

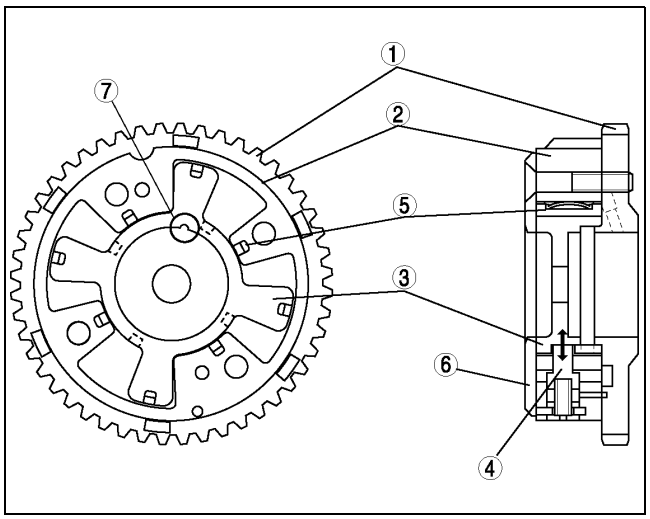

AME2224N600

OIL CONTROL VALVE (OCV)

A6E221112111T06

- The oil control valve (OCV) consists of a spool valve that switches the passages for engine oil, a coil that moves the spool valve, a plunger, and a return spring.

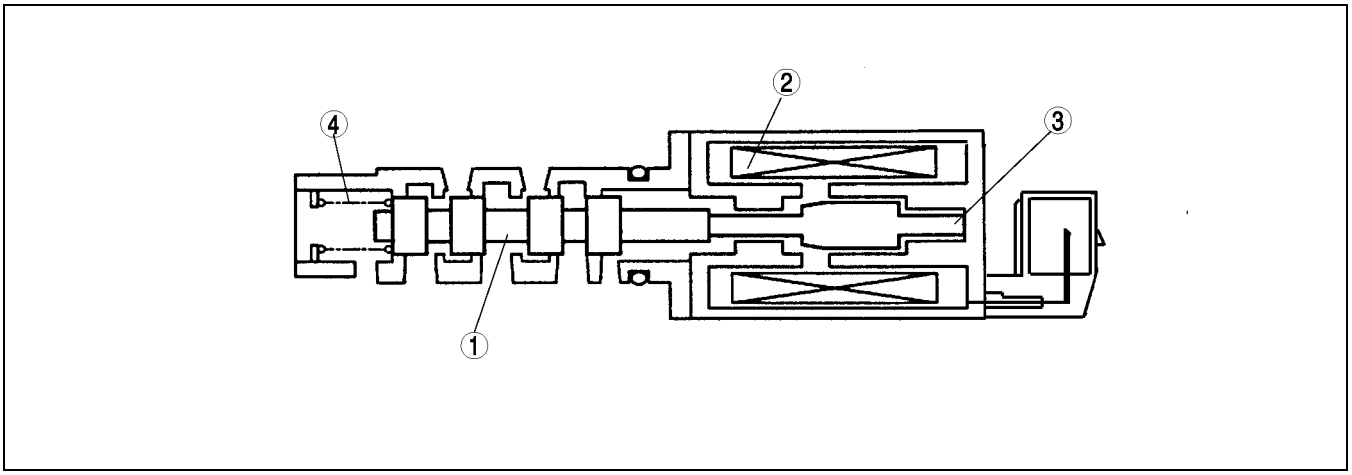

AME2211N012

1	Spool valve
2	Coil

3	Plunger
4	Return spring

LUBRICATION SYSTEM

ABBREVIATIONS D-2
ABBREVIATIONS D-2
OUTLINE D-2
OUTLINE OF CONSTRUCTION D-2
FEATURES D-2
SPECIFICATIONS D-2
LUBRICATION SYSTEM D-3
STRUCTURAL VIEW D-3
LUBRICATION FLOW DIAGRAM D-4
OIL PUMP D-7
OIL PAN D-9
OIL STRAINER D-10
OIL FILTER D-10
OIL JET VALVE D-12

ABBREVIATIONS

ABBREVIATIONS

A6E330102000T01

OCV	Oil control valve

OUTLINE

OUTLINE OF CONSTRUCTION

A6E330201003T01

- The lubrication system is a forced-fed type that uses a full-flow filter.
- An environment-friendly oil filter, designed so that only the internal oil filter (rather than entire assemly) need to be replaced, has been adopted.

FEATURES

A6E330201003T02

Reduced weight
- Aluminum alloy oil pan has been adopted.
- Plastic oil strainer has been adopted.
- Resin oil filter cover has been adopted.

Reduced vibration and noise
- An oil pan made from laminated damping steel has been adopted.
- The oil pan upper block is tightened with main bearing cap.

Improved lubrication and reliability
- The following have been adopted.
  — Trochoid gear type oil pump
  — Water-cooled type oil cooler (LF and L3 engine models)
  — Oil jet valve

SPECIFICATIONS

A6E330201003T03

Item		Engine		
		L8	LF	L3
Lubrication system		Force-fed type		
Oil cooler		—	Water-cooled	
Oil pressure	(kPa {kgf/cm^2, psi} [rpm])	234—521 {2.39—5.31, 33.9—75.5} [3,000]		395—649 {4.03—6.61, 57.3—94.1} [3,000]
Oil pump	Type	Trochoid gear type		
	Relief pressure (kPa {kgf/cm^2, psi})	500—600 {5.09—6.11, 72.6—87.0}		
Oil filter	Type	Full-flow, paper element		
	Bypass pressure (kPa {kgf/cm^2, psi})	80—120 {0.9—1.2, 12.8—17.0}		
Oil capacity (Approximate quantity)	Total (Dry engine) (L {US qt, Imp qt})	4.6 {4.8, 4.0}		4.2 {4.4, 3.6}
	Oil replacement (L {US qt, Imp qt})	3.9 {4.0, 3.4}		3.1 {3.3, 2.7}
	Oil and oil filter replacement (L {US qt, Imp qt})	4.3 {4.5, 3.8}		3.5 {3.7 ,3.1}

Recommended Engine oil

Item		Market		
		European countries		Except European countries
Engine oil	Grade	API SJ ACEA A1 or A3	API SL ILSAC GF-3	API SG, SH, SJ, SL ILSAC GF-2, GF-3
	Viscosity (SAE)	5W-30	5W-20	40, 30, 20, 20W-20, 10W-30, 10W-40, 10W-50, 20W-40, 15W-40, 20W-50, 15W-50, 5W-20, 5W-30
	Remarks	Mazda genuine DEXELIA oil	—	—

D

LUBRICATION SYSTEM

STRUCTURAL VIEW

A6E333001003T01

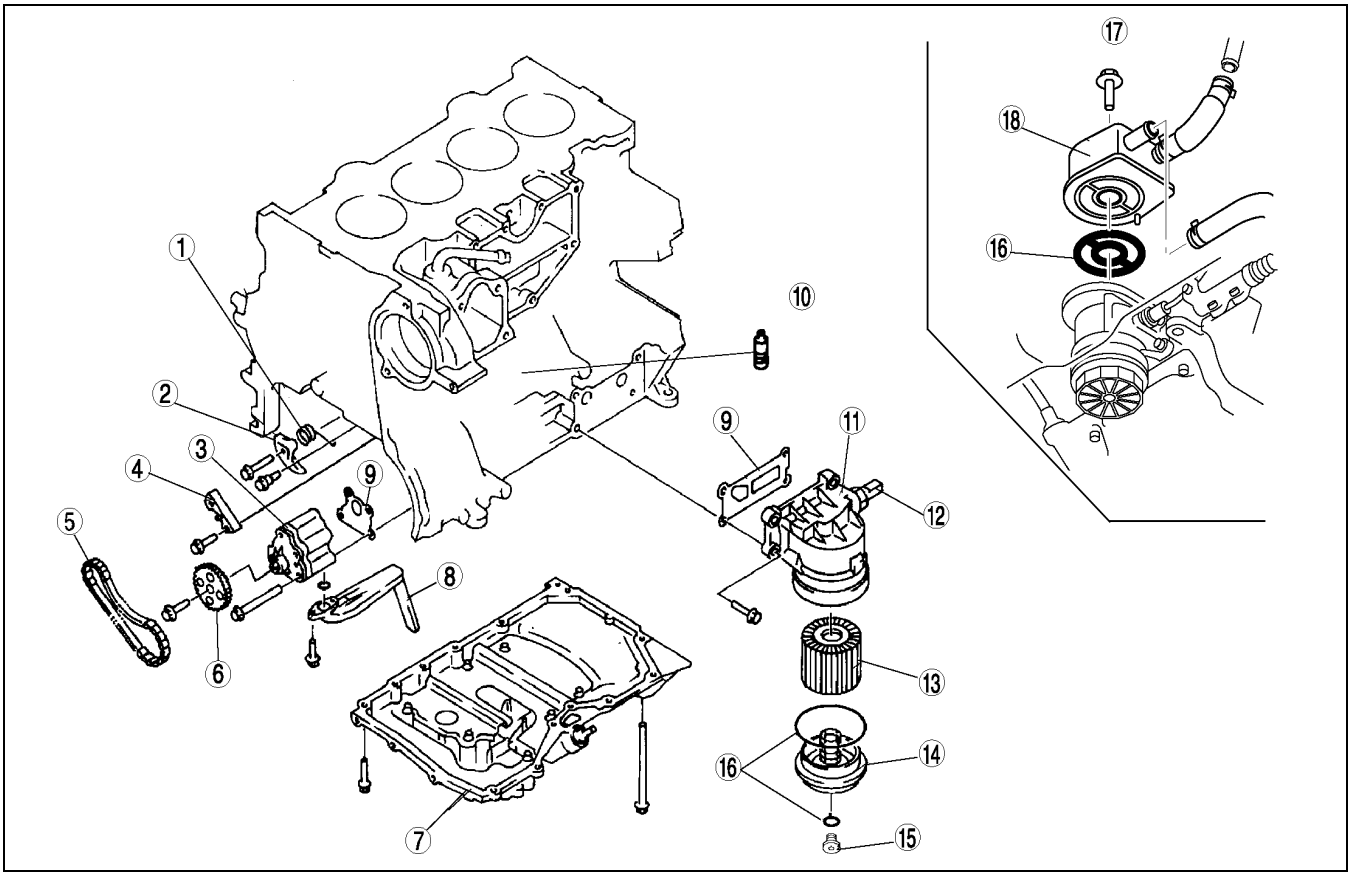

AME3300N001

1	Chain tensioner spring
2	Chain tensioner
3	Oil pump
4	Chain guide
5	Oil pump driven chain
6	Oil pump sprocket
7	Oil pan
8	Oil strainer
9	Gasket

10	Oil jet valve
11	Oil filter adapter
12	Oil pressure switch
13	Oil filter
14	Oil filter cover
15	Oil filter drain plug
16	O ring
17	LF and L3 engine models
18	Oil cooler

LUBRICATION FLOW DIAGRAM

A6E333001003T02

L8, LF

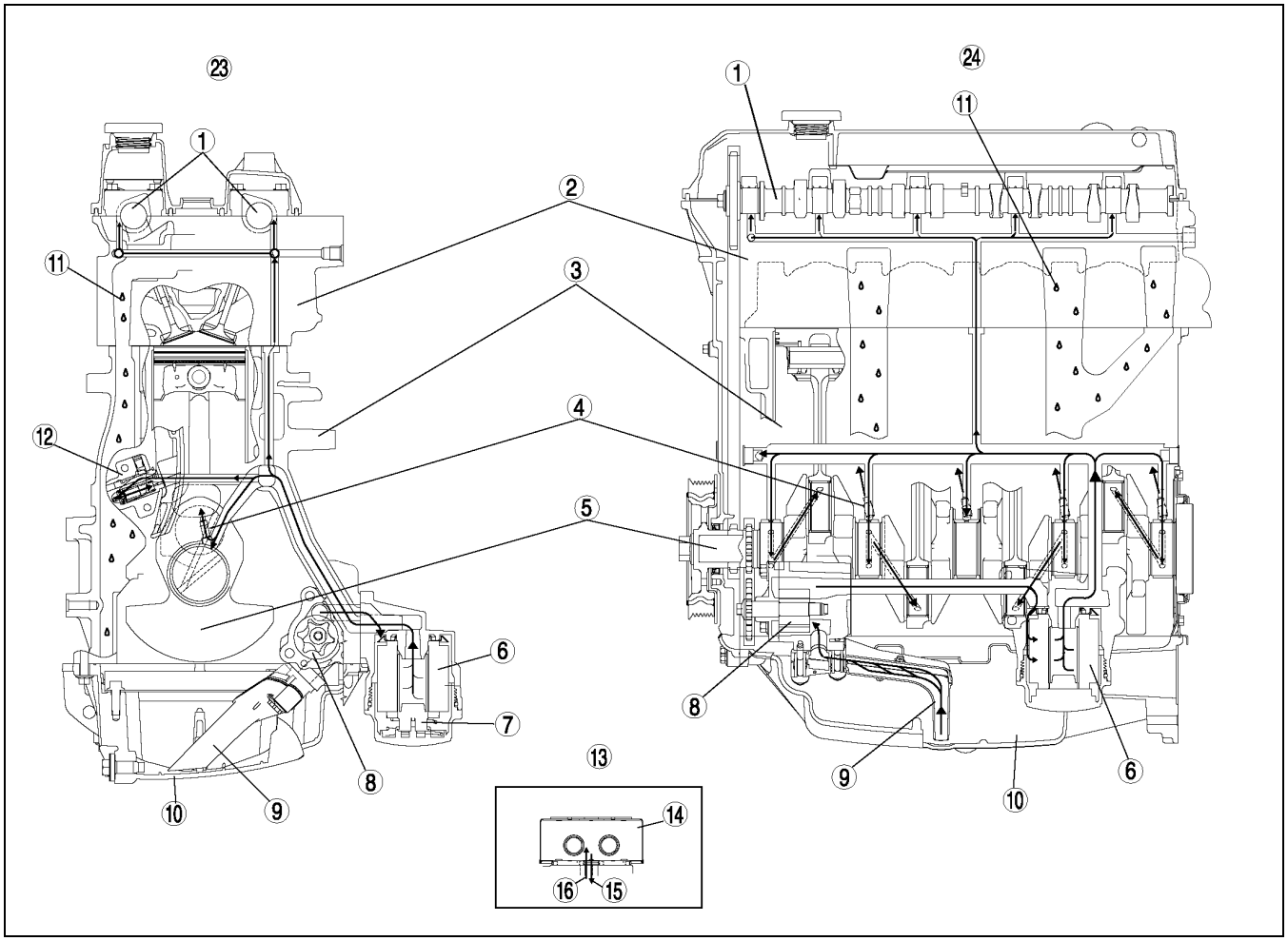

AME3300N002

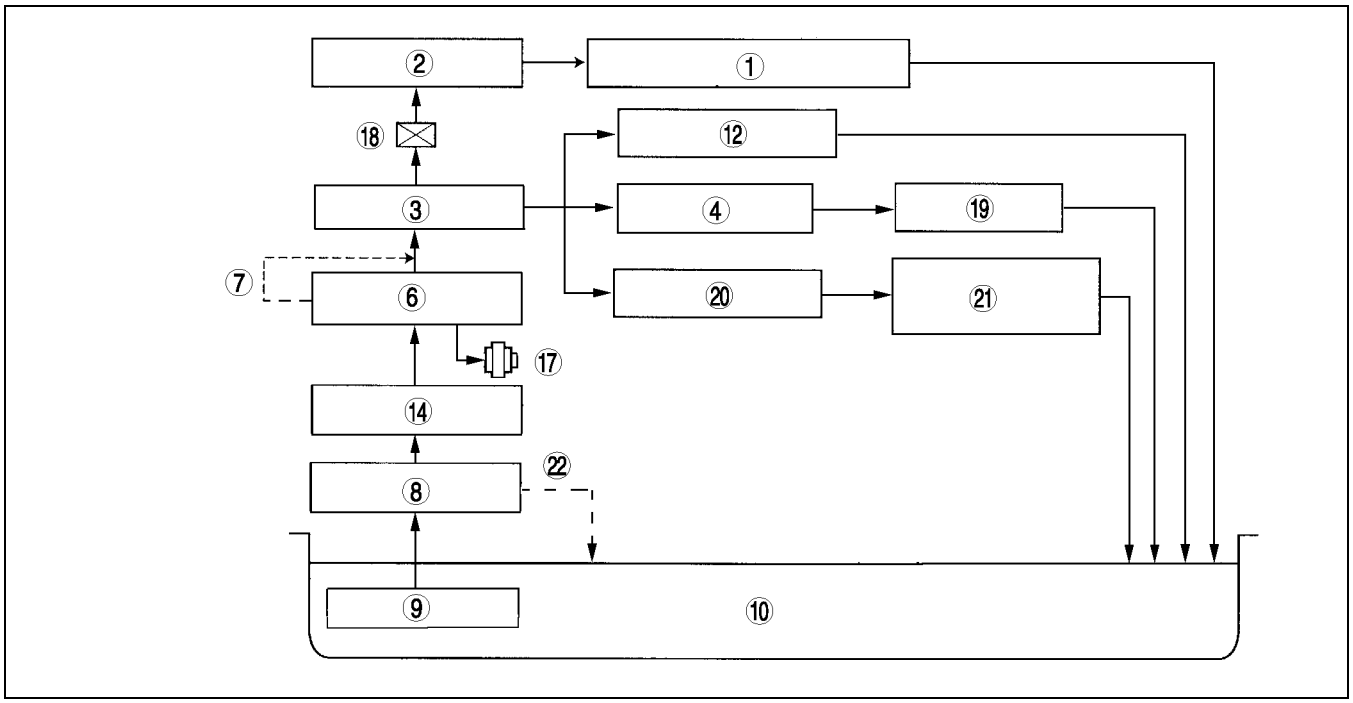

AME3300N003

1	Camshaft
2	Cylinder head
3	Cylinder block
4	Oil jet valve
5	Crankshaft
6	Oil filter
7	Oil filter bypass valve
8	Oil pump
9	Oil strainer
10	Oil pan
11	Return oil
12	Chain tensioner
13	LF engine model

14	Oil cooler
15	To oil filter
16	From oil pump
17	Oil pressure switch
18	Orifice
19	Piston
20	Main bearing
21	Crankshaft bearing, Connecting rod bearing
22	Oil pressure relief valve
23	Elevational view
24	Side view

L3

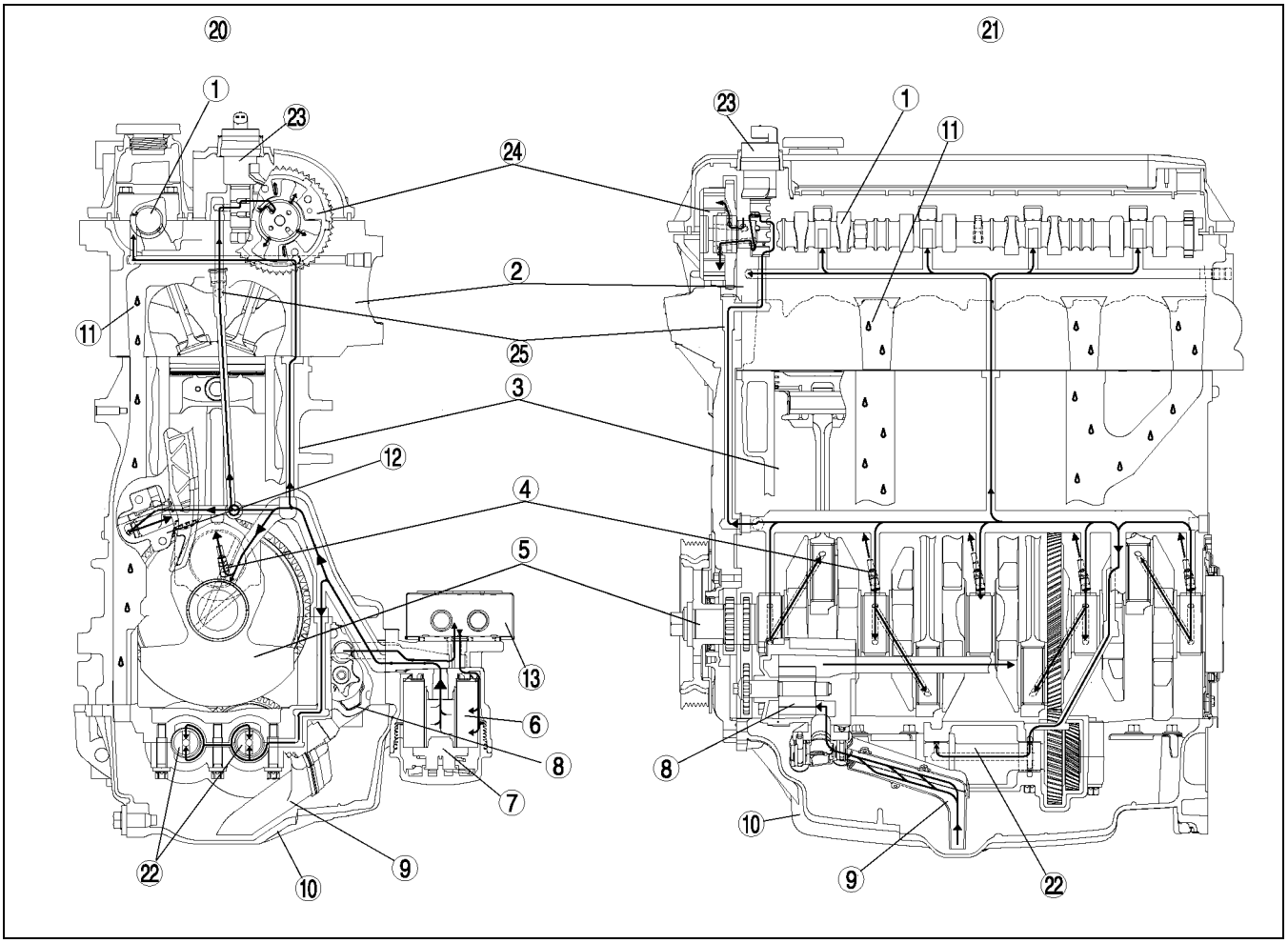

AME3300N004

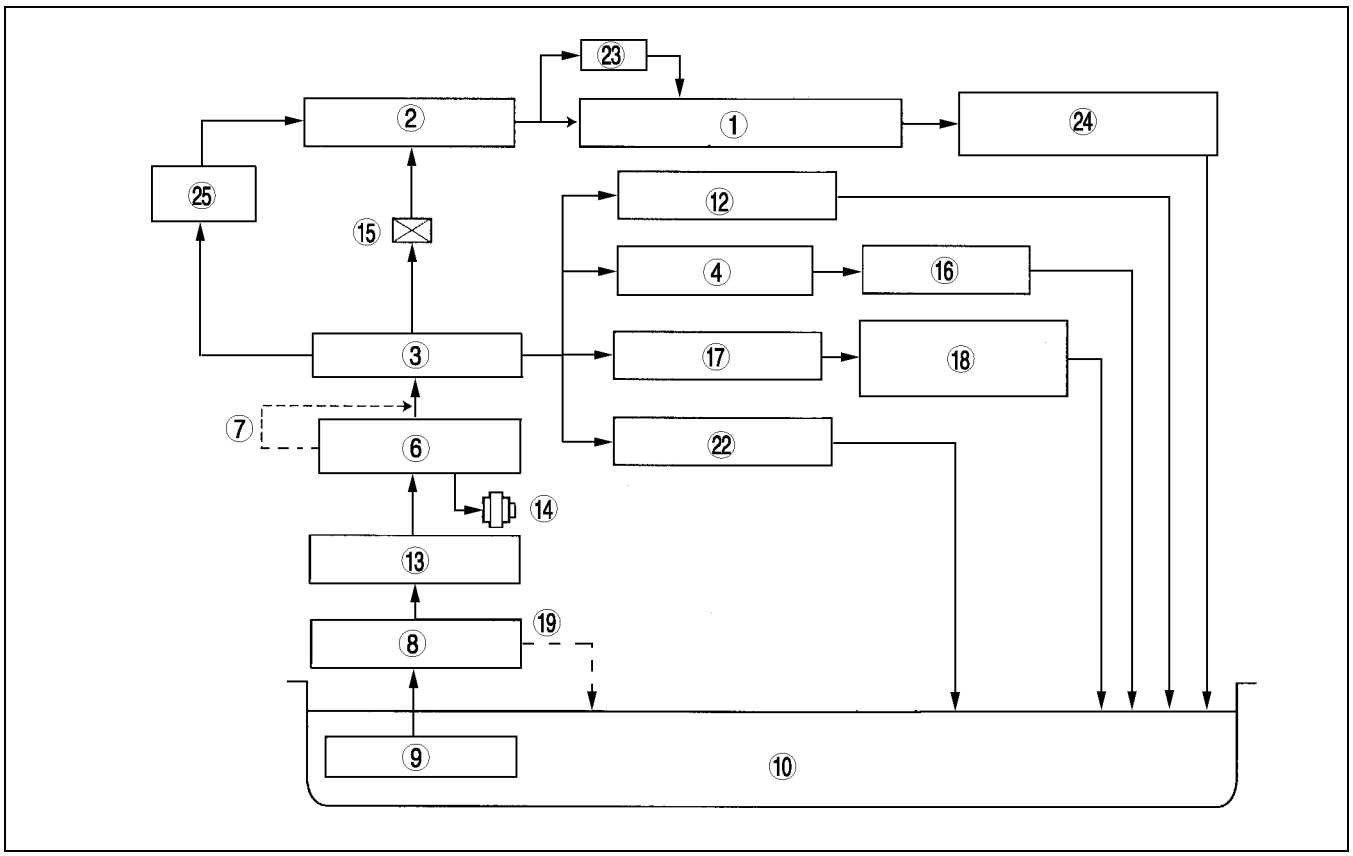

AME3300N005

1	Camshaft
2	Cylinder head
3	Cylinder block
4	Oil jet valve
5	Crankshaft
6	Oil filter
7	Oil filter bypass valve
8	Oil pump
9	Oil strainer
10	Oil pan
11	Return oil
12	Chain tensioner
13	Oil cooler

14	Oil pressure switch
15	Orifice
16	Piston
17	Main bearing
18	Crankshaft bearing, Connecting rod bearing
19	Oil pressure relief valve
20	Elevational view
21	Side view
22	Balance shaft
23	Oil control valve (OCV)
24	Variable valve timing actuator
25	Oil filter (Inner engine front cover)

OIL PUMP

A6E333014100T01

Structure

- The oil pump is installed inside the engine front cover. The crankshaft drives the inner rotor via the oil pump chain and oil pump sprocket.
- The oil pump consists of the oil pump sprocket, oil pump chain, oil pump chain guide, oil pump chain tensioner, and oil pump chain tensioner spring.

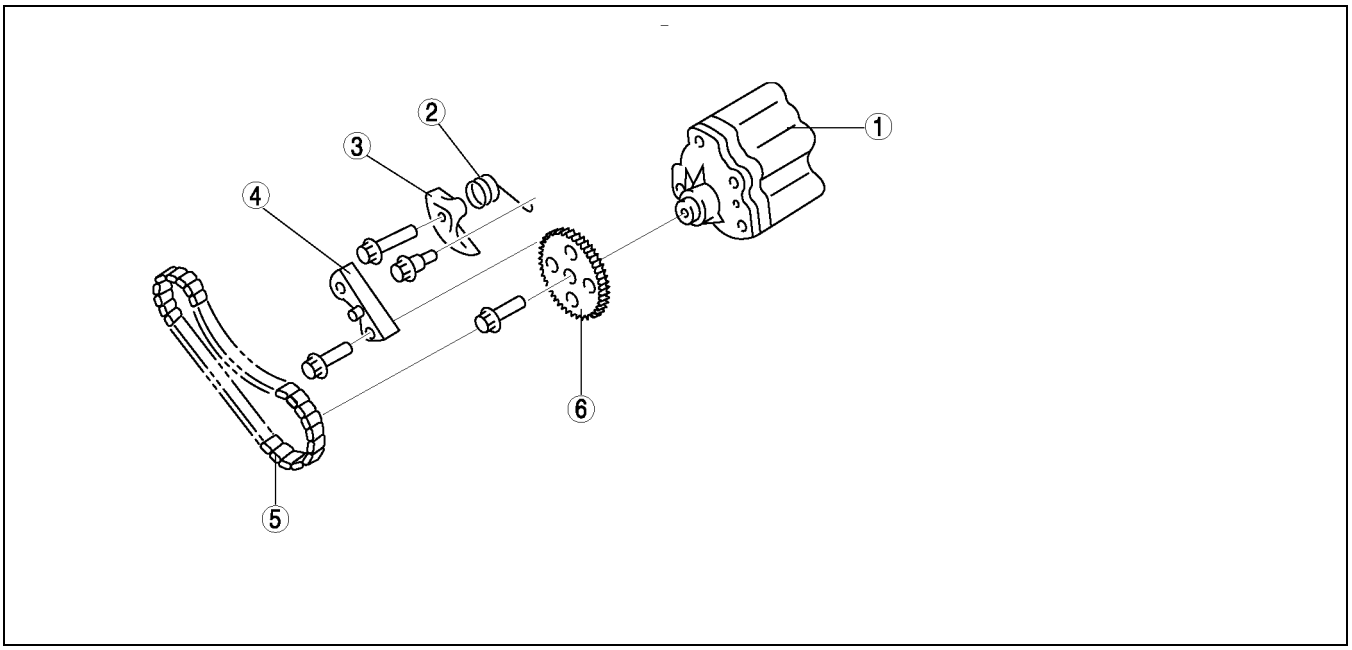

AME3300N006

1	Oil pump body (with a built-in relief valve)
2	Oil pump chain tensioner spring
3	Oil pump chain tensioner

4	Oil pump chain guide
5	Oil pump chain
6	Oil pump sprocket

- An efficient and compact 5-lobe epitrochoid and 6-flank inner envelop type gear has been adopted on the oil pump.
- The oil pump consists of the inner and outer rotors, relief valve and oil pump body.
- The oil pump cannot be disassembled. If there is an oil pump malfunction, replace it as a unit.

OIL PUMP SPEC.

ITEM	ENGINE SPEED [rpm]	ENGINE		
		L8	LF	L3
Oil discharge pressure [Oil temperature: 100°C {212°F}] (kPa {kgf/cm^2, psi})	1,500	129— 269 {1.32—2.74, 18.7—39.0}		193—400 {1.97—4.07, 27.9—58.0}
	3,000	234—521 {2.39—5.31, 33.9—75.5}		395— 649 {4.03—6.61, 57.3—94.1}
Relief valve opening pressure (kPa {kgf/cm^2, psi})		500—600 {5.09—6.11, 72.6—87.0}		

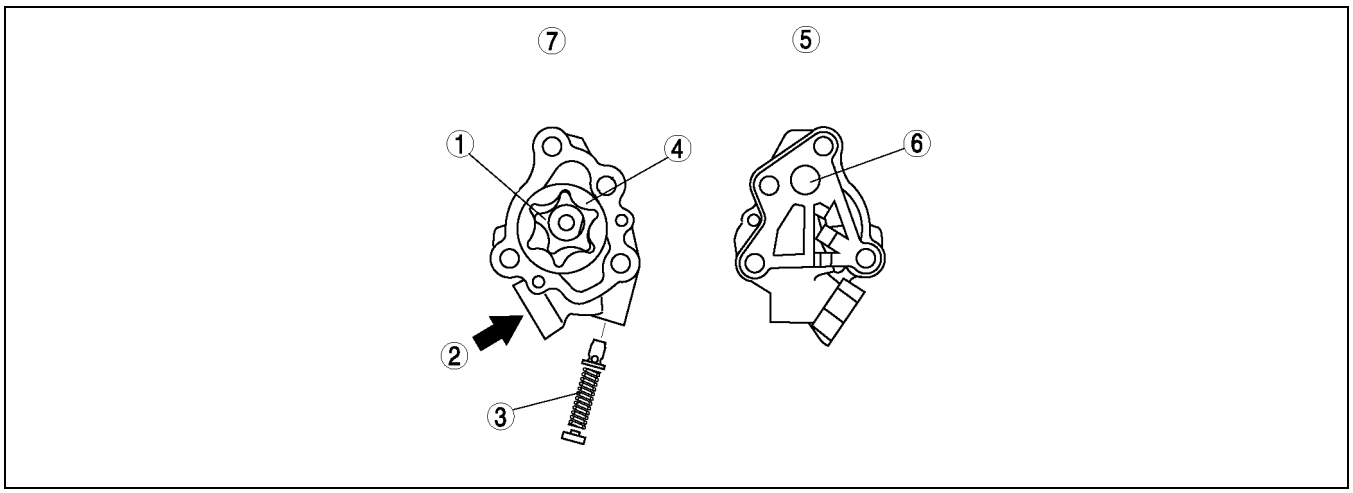

AME3300N007

1	Inner rotor
2	Oil in
3	Relief valve assembly
4	Outer rotor

5	Back
6	Oil out
7	Front

- A silent chain (link connecting type) has been adopted to the oil pump chain to reduce chain operation noise when the chain and the sprocket engage.
- The engine oil in the engine front cover lubricates the oil pump chain. The wear resistance has been improved by the nitriding processing of the pin constructing the oil pump chain.
- The durability has been improved by heating the sintering material on the oil pump sprocket inside of a furnace.

OIL PUMP DRIVEN CHAIN SPEC.

ITEM	ENGINE		
	L8	LF	L3
Pitch size (mm {in})	8 {0.4}		6.35 {0.25}
Number of pitches	54		66

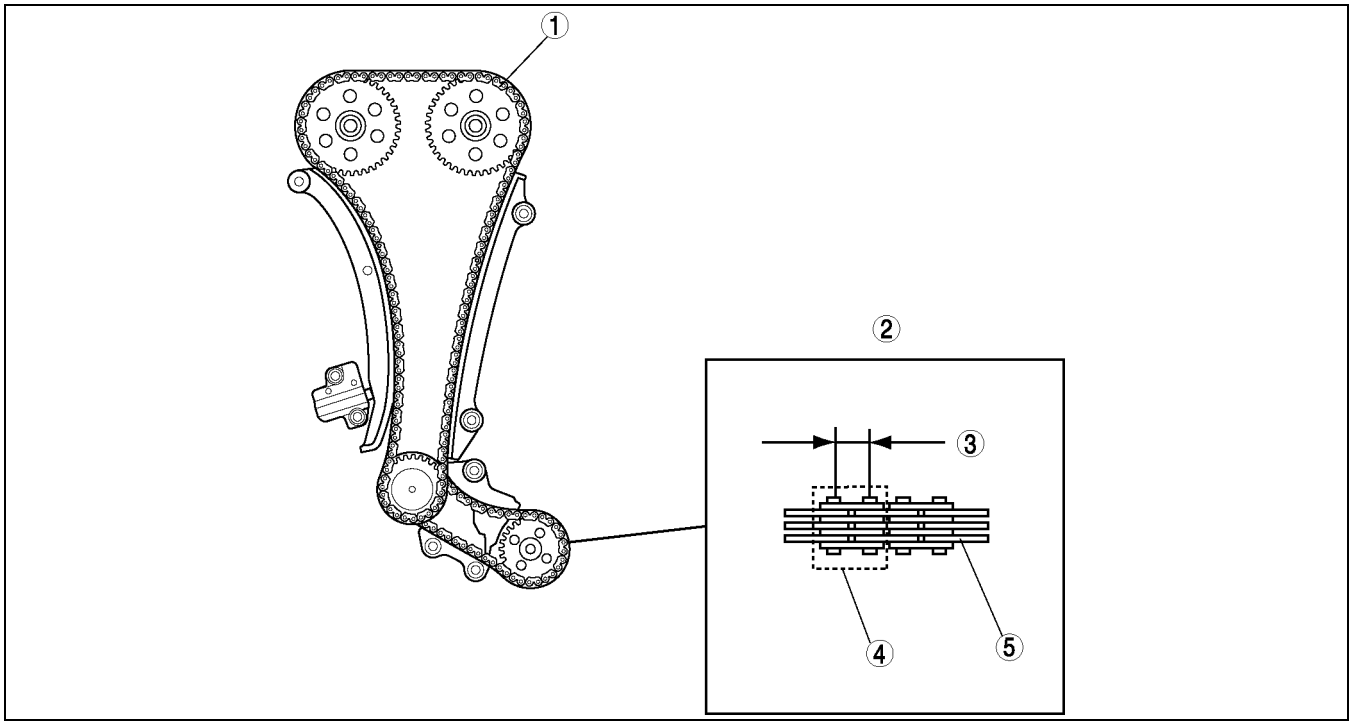

AME3300N008

1	Timing chain
2	Oil pump driven chain
3	Pitch size

4	Pitch
5	Link

- The oil pump sprocket is heat forged from sintered metals to improve durability.

OIL PUMP SPROCKET SPEC.

ITEM		ENGINE		
		L8	LF	L3
Outer diameter	(mm {in})	60.78 {2.394}		46.46 {1.829}
Drive tooth width	(mm {in})	6.15 {0.242}		5.7 {0.23}

1	Outer diameter
2	Drive tooth width

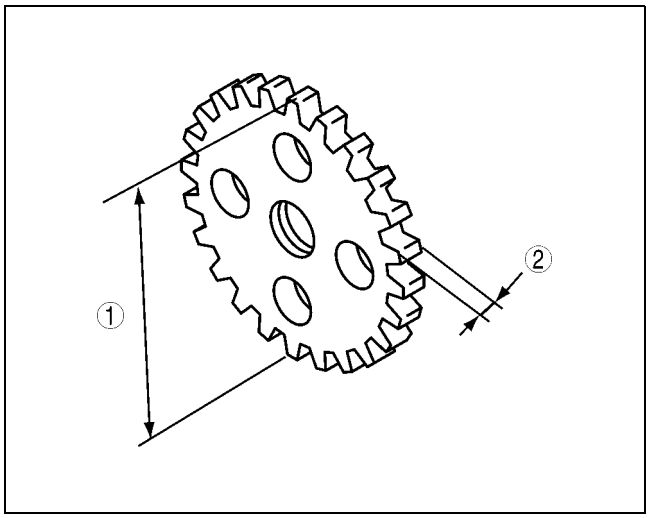

AME3300N009

OIL PAN

A6E333010040T01

Structure

- An aluminum alloy oil pan has been adopted for weight reduction. A silicon sealant with excellent sealing qualities has been also adopted.
- Oil pan baffle plates have been adopted inside the oil pan to stabilize engine oil diffusion by crankshaft rotation and oil level when the vehicle rolls.

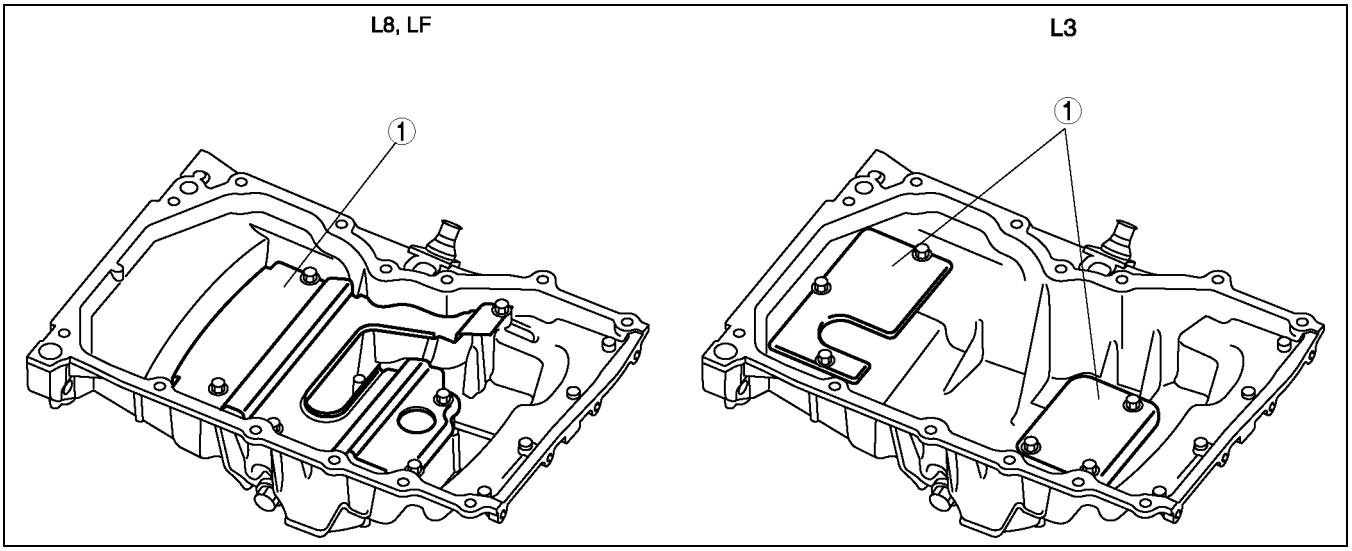

AME3300N010

1	Oil pan baffle plate

OIL STRAINER

A6E333014700T01

Structure

- A plastic oil strainer with a resin filter in the middle of the strainer has been adopted for weight reduction.

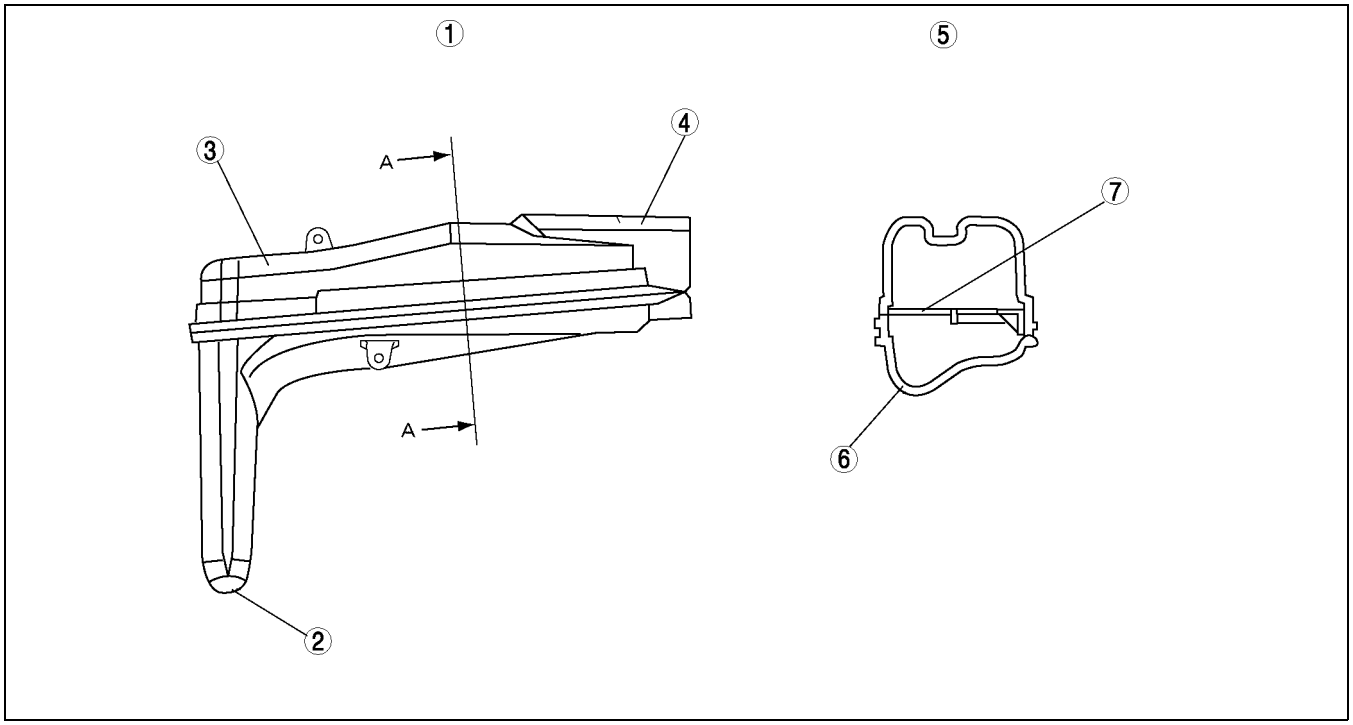

AME3300N011

1	Appearance figure
2	Oil supply mouth
3	Oil strainer
4	Oil pump attachment side

5	A - A sectional view
6	Oil strainer
7	Filter

OIL FILTER

A6E333014300T01

Structure

- The oil filter is attached to the right side of the oil level gage (oil pan side) on cylinder block.
- The oil filter adapter has been adopted for weight reduction. The oil pressure switch is installed on the oil filter adapter.
- A resin oil filter has been adopted for weight reduction. A drain has been installed on the bottom of the oil filter replacement service ability.
- An environment-friendly oil filter, designed so that only the internal oil filter (rather than entire assembly) need to be replaced, has been adopted. The replaceable oil filter is made of a material that can be completely incinerated.
- A water-cooled oil cooler has been adopted to reduce the engine oil degradation. Also, the exclusive use oil filter adapter has been adapted for the oil cooler. (LF and L3 engine models)

OIL FILTER SPEC.

ITEM		ENGINE		
		L8	LF	L3
Outer diameter	(mm {in})	67—69 {2.4—2.7}		65.2—65.8 {2.57—2.59}
Height	(mm {in})	73.5—75.5 {2.89—2.97}		72.6—74.4 {2.86—2.92}

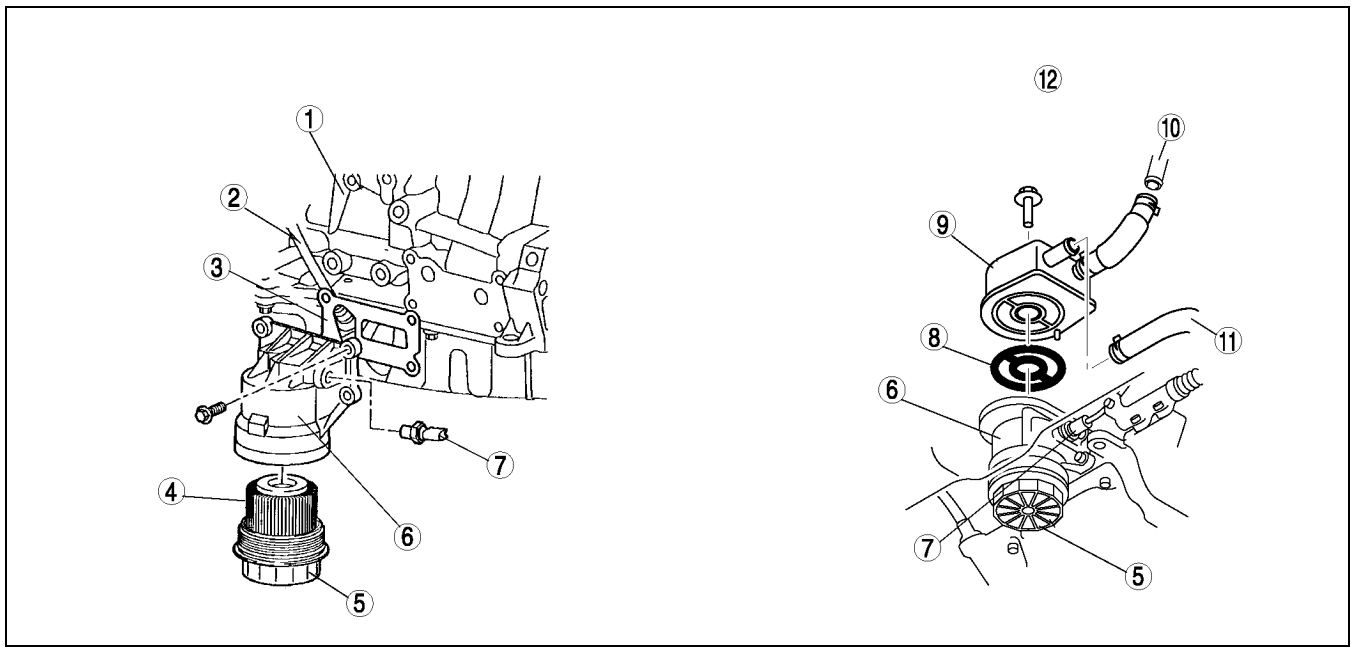

AME3300N012

1	Cylinder block
2	Oil level gage
3	Gasket
4	Oil filter
5	Oil filter cover
6	Oil filter adapter

7	Oil pressure switch
8	O-ring
9	Oil cooler
10	To water outlet case
11	To thermostat
12	LF and L3 engine models

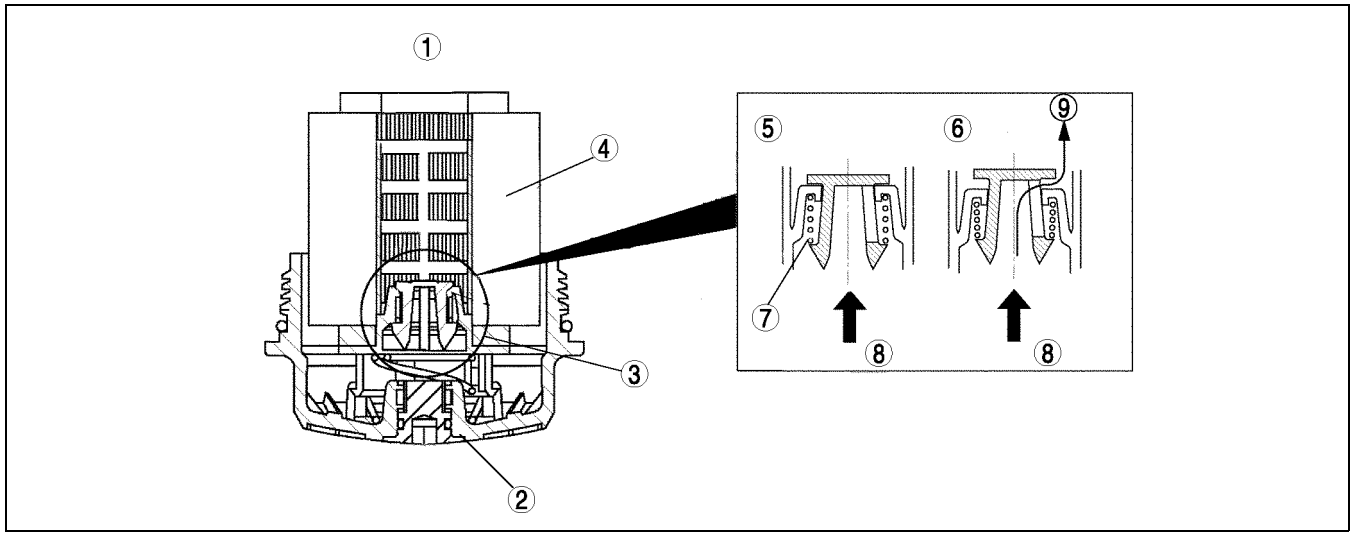

AME3300N013

1	Oil filter
2	Oil filter cover
3	Relief valve
4	Oil filter
5	Normal

6	Relief
7	Spring
8	Oil pressure
9	Oil passage

OIL JET VALVE

A6E333010730T01

Structure

- The oil jet valves are installed in the cylinder block (in the main journal). The piston cooling efficiency by oil injected from the nozzles has been improved by the attachment direction of the oil jet valves which are pointed toward the back surface of each piston.
- The oil jet valves have been designed to maintain optimum oil pressure in the engine by controlling the oil injection of the oil according to the oil pressure on the oil jet valve.

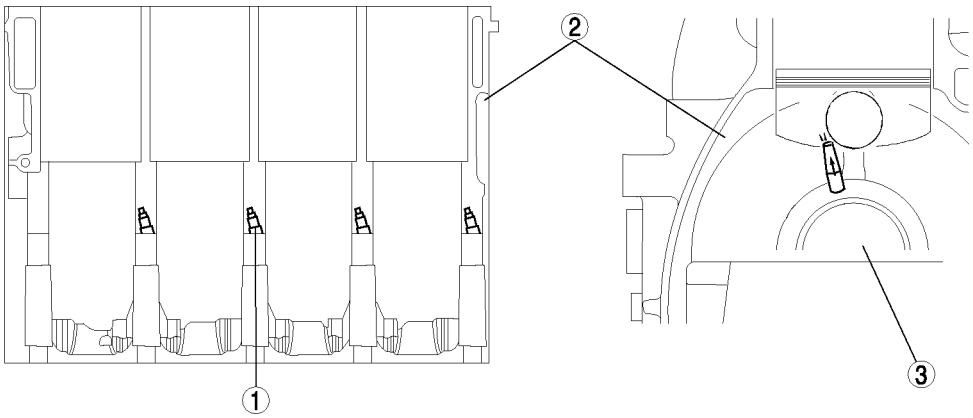

AME3300N014

1	Oil jet valve
2	Cylinder block

3	Crankshaft

Operation

- Oil pressure applied to the check-ball in the oil jet valve opens and closes the oil passage way to the nozzle and controls oil injection start and stop.
- Oil pressure greater than the specified value applied to the check-ball in the oil jet valve opens the oil passage to the spring-pressed nozzle, starting injection. Conversely, oil pressure less than the specified value applied to the check-ball blocks the jet valve by spring force, stopping injection.

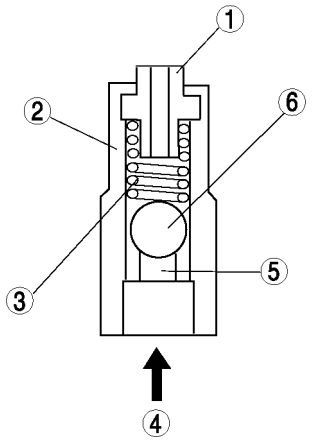

AME3300N015

1	Nozzle
2	Oil jet valve body
3	Spring

4	Oil
5	Oil passage
6	Check ball

COOLING SYSTEM

ABBREVIATIONS E-2
ABBREVIATIONS E-2
OUTLINE E-2
OUTLINE OF CONSTRUCTION E-2
FEATURES E-2
SPECIFICATIONS E-2
COOLING SYSTEM E-3
STRUCTURAL VIEW E-3
COOLING FLOW DIAGRAM E-4
RADIATOR E-5
COOLING FAN E-5
RADIATOR COWLING, COOLANT RESERVOIR TANK E-6
THERMOSTAT E-6
WATER PUMP E-7

ABBREVIATIONS

ABBREVIATIONS

A6E360102000T01

ATF	Automatic transaxle fluid
ATX	Automatic transaxle

OUTLINE

OUTLINE OF CONSTRUCTION

A6E360201004T01

- L8, LF and L3 engine models are water cooled by forced circulation cooling systems.

FEATURES

A6E360201004T02

Reduced weight and size

- Cross-flow type radiator with radiator tanks made of plastic and the core made of aluminum.
- Stainless steel thermostat body is built in the plastic thermostat case
- Built-in type water pump

Reduce engine noise and vibration

- The cooling fan is a thermo modulator system type.
- Electric cooling fan has been adopted.

Improved reliability

- The following have been adopted.
  - — Thermostat of highly durable wax type.
  - — Water pump that is built into cylinder block

SPECIFICATIONS

A6E360201004T03

<table>
<tr><th colspan="4" rowspan="2">Item</th><th colspan="4">Engine type</th></tr>
<tr><th>L8</th><th>LF</th><th></th><th>L3</th></tr>
<tr><td colspan="4">Cooling system</td><td colspan="4">Water-cooled, Electromotive</td></tr>
<tr><td colspan="4">Coolant capacity (Approximate quantity) (L {US qt, Imp qt})</td><td colspan="4">7.5 {7.9, 6.6}</td></tr>
<tr><td>Water pump</td><td colspan="3">Type</td><td colspan="4">Centrifugal, V-ribbed belt-driven</td></tr>
<tr><td rowspan="4">Thermostat</td><td colspan="3">Type</td><td colspan="4">Wax</td></tr>
<tr><td colspan="3">Opening temperature (°C {°F})</td><td colspan="4">80.0—84.0 {176—183.2}</td></tr>
<tr><td colspan="3">Full-open temperature (°C {°F})</td><td colspan="4">97 {206.6}</td></tr>
<tr><td colspan="3">Full-open lift (mm {in})</td><td colspan="4">More then 8.0 {0.31} min.</td></tr>
<tr><td>Radiator</td><td colspan="3">Type</td><td colspan="4">Corrugated fin</td></tr>
<tr><td colspan="4">Cap valve opening pressure (kPa {kgf/cm^2, psi})</td><td colspan="4">112.8—142.2 {1.15—1.45, 16.4—20.6}</td></tr>
<tr><td rowspan="3">Cooling fan</td><td colspan="3">Type</td><td colspan="4">Thermo-modulated, Electromotive</td></tr>
<tr><td rowspan="2">Blade</td><td>Outer diameter (mm {in})</td><td>300 {11.8}</td><td colspan="2">300 {11.8}</td><td>320 {12.6}</td></tr>
<tr><td>Quantity</td><td>Cooling fan No.1: 5
Cooling fan No.2: 7</td><td>(Except for Israel)
Cooling fan No.1: 5
Cooling fan No.2: 7</td><td>(For Israel)
Cooling fan No.1: 7
Cooling fan No.2: 5</td><td>Cooling fan No.1: 7
Cooling fan No.2: 5</td></tr>
</table>

COOLING SYSTEM

STRUCTURAL VIEW

A6E363001004T02

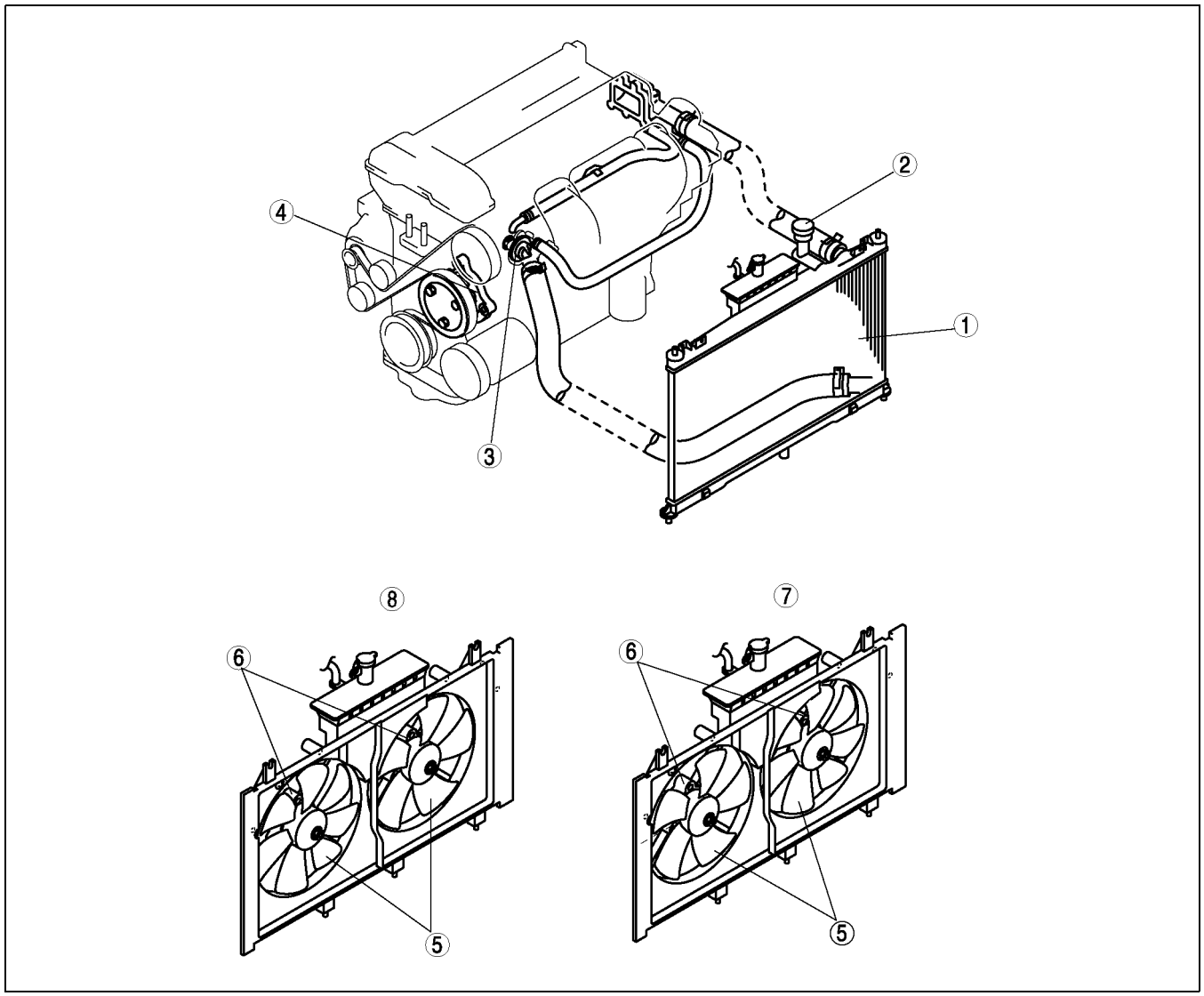

AME3602N001

1	Radiator
2	Radiator cap
3	Thermostat
4	Water pump

5	Cooling fan blade
6	Cooling fan motor No.1,Cooling fan motor No.2
7	For Israel and L3 engine model
8	LF engine model except for Israel and L8 engine model

COOLING FLOW DIAGRAM

A6E363001004T03

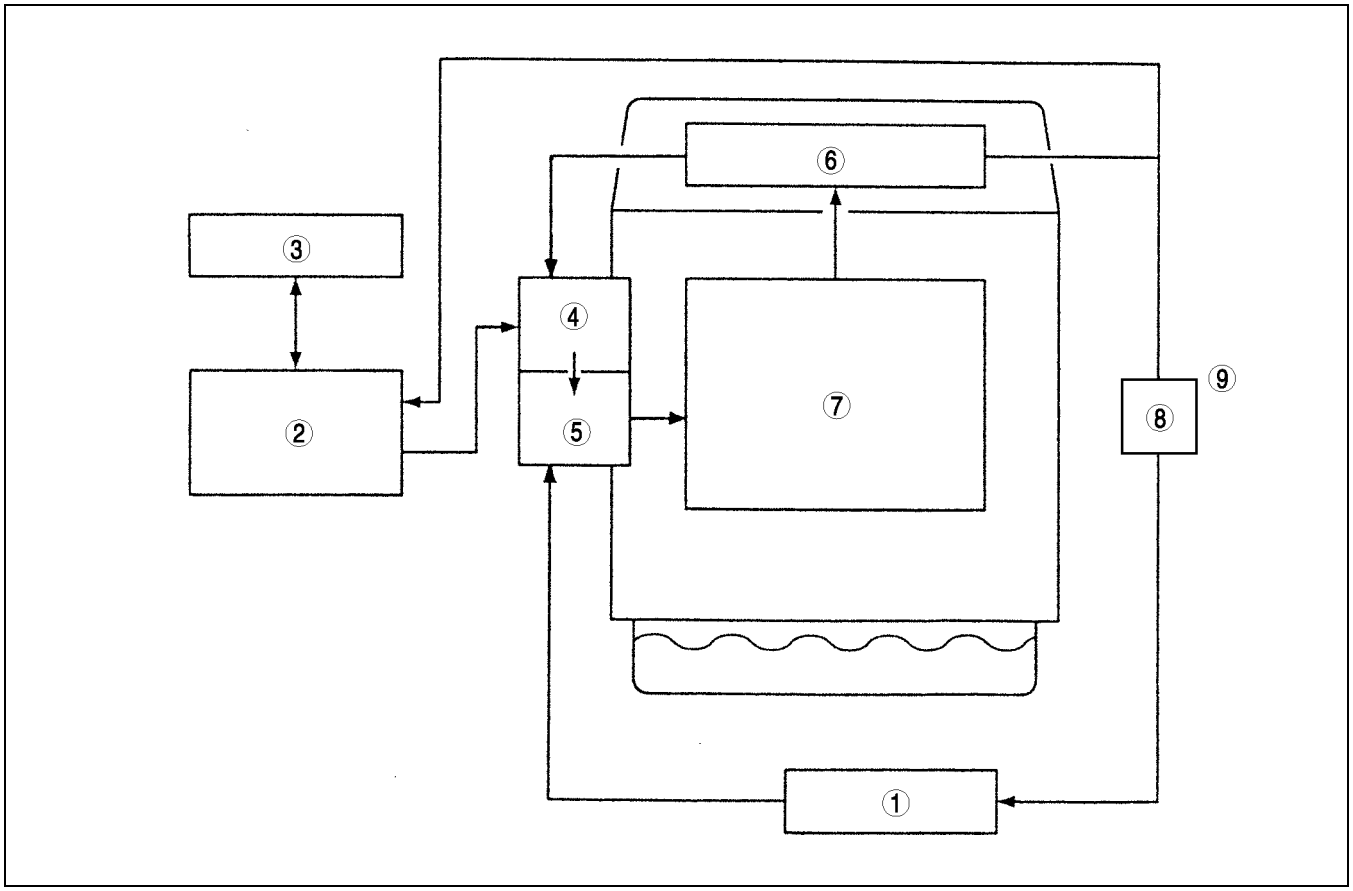

AME3602N002

1	Heater
2	Radiator
3	Coolant reservoir tank
4	Thermostat
5	Water pump

6	Cylinder head
7	Cylinder block
8	Oil cooler
9	LF and L3 engine models

RADIATOR

A6E363015200T01

Structure

- A cross-flow radiator with corrugated fins is used for improved cooling.
- The radiator tanks are made of plastic and the core is made of aluminum.
- Four rubber-insulated mounting brackets are utilized to decrease vibration.
- The radiator has an ATF cooler in the radiator tank. (ATX)
- A small pressuring type cap has been adopted for the radiator cap.

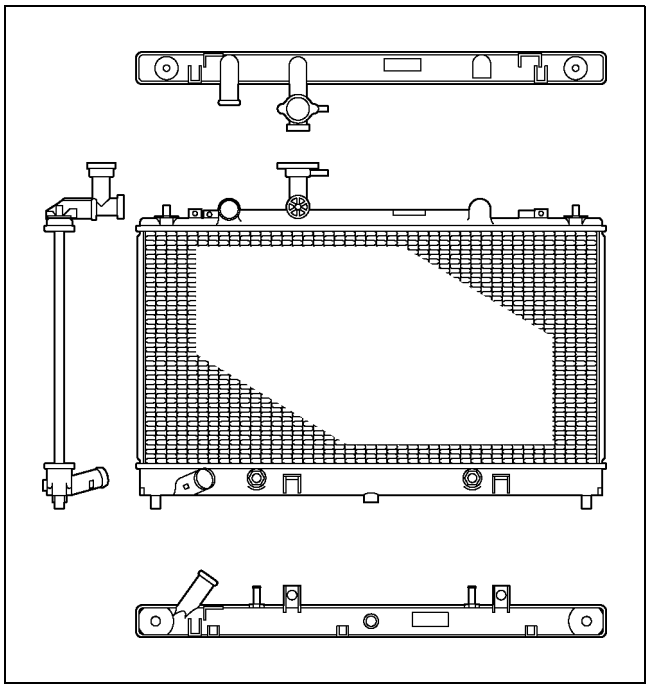

AME3602N003

COOLING FAN

A6E363015140T01

Structure

- Electric cooling fans No.1 and No.2, operated according to a fan control signal from the PCM, have been adopted. Due to this, engine noise is reduced and rapid warming-up is possible.
- A cooling fan No.1 and No.2 is attached to the radiator cowling.

Cooling fan, fan motor specs:

ITEM			ENGINE		
			L8	LF	L3
Cooling fan No.1	Number of Blade	(sheet)	5	For Israel: 7 Except for Israel: 5	7
	Motor output	(W)	80	80-120	70
Cooling fan No.2	Number of Blade	(sheet)	7	For Israel: 5 Except for Israel: 7	5
	Motor output	(W)	80	80-120	120

RADIATOR COWLING, COOLANT RESERVOIR TANK

A6E363015140T02

Structure

- A radiator cowling is made of plastic for the weight reduction.
- A coolant reservoir tank can be removed from the radiator cowling. (For Israel and L3 engine models)
- A coolant reservoir tank can not be removed from the radiator cowling. (LF engine models except for Israel and L8 engine models)

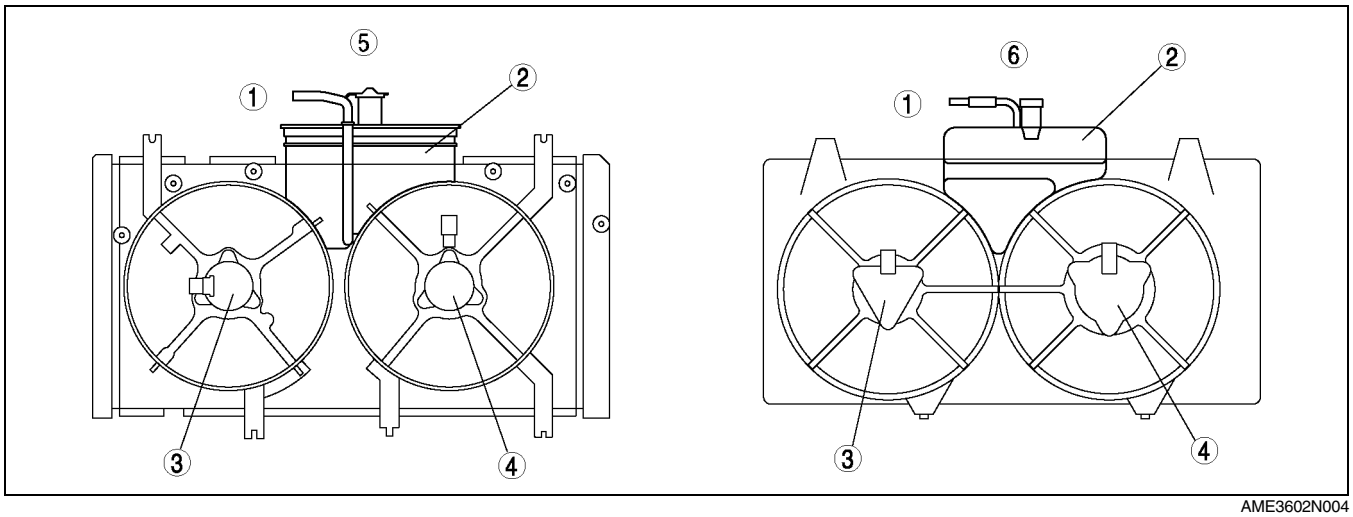

AME3602N004

1	To radiator
2	Coolant reservoir tank
3	Cooling fan motor No.1

4	Cooling fan motor No.2
5	LF engine model except for Israel and L8 engine models
6	For Israel and L3 engine models

THERMOSTAT

A6E363015171T01

Structure

- A wax-type thermostat with a jiggle-pin has been adopted.
- The plastic thermostat case has a built-in stainless steel thermostat body with excellent corrosion resistance.
- When the engine coolant temperature is below 75.0°C {167°F}, the thermostat stops the circulation of radiator coolant from the radiator for improved engine warming. When the engine coolant temperature is between 80.0°C {176°F} to 84.0 °C {183.2°F}, the thermostat begins opening the valve and engine coolant flows from the radiator to stabilize engine coolant temperature.

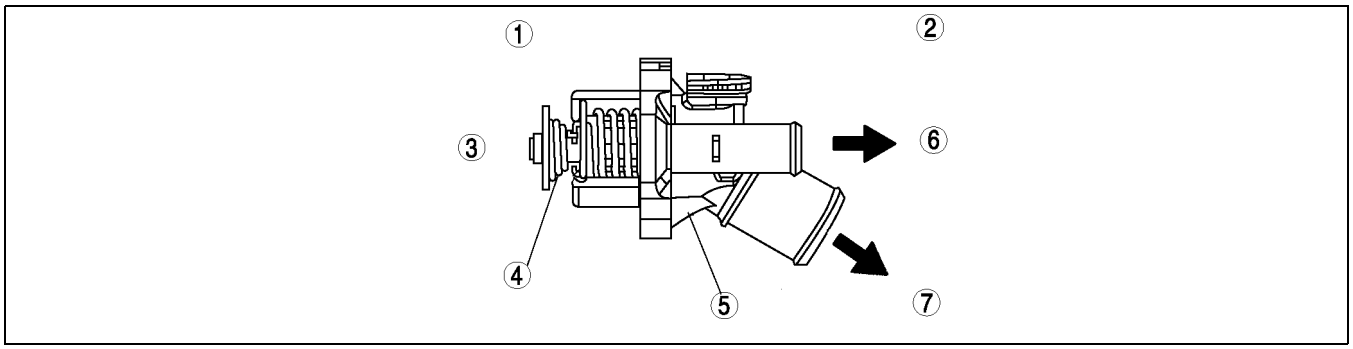

AME3602N005

1	Engine side
2	Radiator side
3	Water pump
4	Thermostat body

5	Thermostat case
6	Oil cooler (LF and L3 engine models) Heater hose (L8 engine model)
7	Lower radiator hose

WATER PUMP

A6E363015010T01

Structure

- The water pump body is made of aluminum alloy for weight reduction.
- The impeller is built into the cylinder block and the water pump is not seviceable and must be replaced as a unit if faulty.
- The water pump is driven by the front drive belt. (sirpentain type)

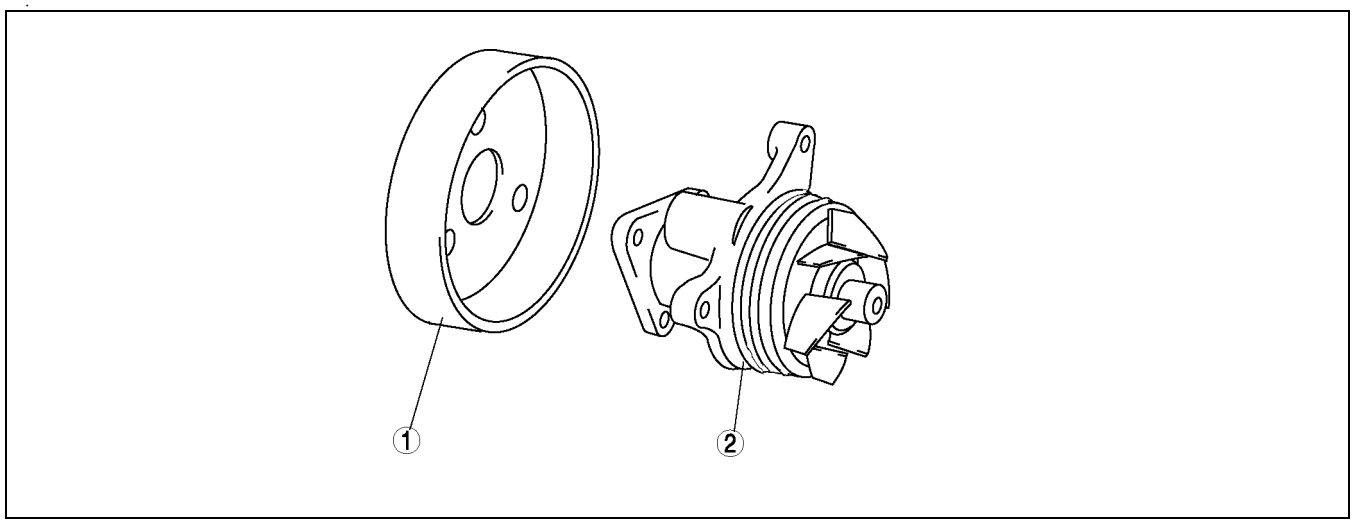

AME3602N006

1	Water pump pulley
2	Water pump body

FUEL AND EMISSION CONTROL SYSTEMS

ABBREVIATIONS F-2
ABBREVIATIONS F-2
OUTLINE F-3
OUTLINE OF CONSTRUCTION F-3
FEATURES F-3
SPECIFICATIONS F-3
CONTROL SYSTEM DIAGRAM F-4
CONTROL SYSTEM WIRING DIAGRAM F-6
INTAKE-AIR SYSTEM F-13
INTAKE-AIR SYSTEM OUTLINE F-13
INTAKE-AIR SYSTEM STRUCTURAL VIEW F-14
VARIABLE AIR DUCT (VAD) SYSTEM OUTLINE (L3) F-14
VARIABLE AIR DUCT (VAD) SHUTTER VALVE DESCRIPTION (L3) F-15
VARIABLE AIR DUCT (VAD) SOLENOID VALVE DESCRIPTION (L3) F-16
VARIABLE AIR DUCT (VAD) CHECK VALVE (ONE-WAY) DESCRIPTION (L3) F-16
FUEL SYSTEM F-17
FUEL SYSTEM OUTLINE F-17
FUEL SYSTEM STRUCTURAL VEW F-18
FUEL PUMP UNIT DESCRIPTION F-19
EXHAUST SYSTEM F-20
EXHAUST SYSTEM OUTLINE F-20
EXHAUST SYSTEM STRUCTURAL VIEW F-21
EMISSION SYSTEM F-22
OUTLINE F-22
EMISSION SYSTEM STRUCTURAL VIEW F-23
PULSATION REDUCE CHAMBER DESCRIPTION F-24
THREE-WAY CATALYTIC CONVERTER (TWC) DESCRIPTION F-24
CONTROL SYSTEM F-25
OUTLINE F-25
STRUCTURAL VIEW F-28
BLOCK DIAGRAM F-30
CONTROL DEVICES AND CONTROL RELATIONSHIP CHART F-32
CAMSHAFT POSITION (CMP) SENSOR F-34
CRANKSHAFT POSITION (CKP) SENSOR F-34
IDLE AIR CONTROL (IAC) F-35
VARIABLE AIR DUCT (VAD) CONTROL F-35
VARIABLE INTAKE-AIR CONTROL SYSTEM F-35
VARIABLE TUMBLE CONTROL SYSTEM (VTCS) F-35
VARIABLE VALVE TIMING CONTROL F-36
FUEL INJECTION CONTROL F-36
A/C CUT-OFF CONTROL F-36
ELECTRIC FAN CONTROL F-37
CONTROLLER AREA NETWORK (CAN) F-38
ON-BOARD DIAGNOSTIC F-40
OUTLINE F-40
CONTROL DEVICES AND MONITORING SYSTEM RELATIONSHIP CHART F-40
DIAGNOSTIC TEST MODE F-41
DTC F-44
PID/DATA MONITOR AND RECORD F-50
SIMULATION TEST F-52
KOEO/KOER SELF-TEST F-52

ABBREVIATIONS

ABBREVIATIONS

A6E390118881T01

AAS	Air adjust screw
CAN	Controller area network
DC	Drive cycle
FFD	Freeze frame data
KOEO	Key on, engine off
KOER	Key on, engine running
OCV	Oil control valve
PC	Pending code
PID	Parameter identification
TCS	Traction control system
VAD	Variable air duct
VIS	Variable intake-air system
VLIM	Variable length intake manifold
VTCS	Variable tumble control system

OUTLINE

OUTLINE OF CONSTRUCTION

A6E390218881T01

- The Mazda6 (GG) has been equipped with the new engine (L series). The features of the L series engines are as follows.

FEATURES

A6E390218881T02

System simplification

- Controller area network has been adopted.
- Mechanical returnless fuel system has been adopted.

Improved engine performance

- Variable air duct (VAD) control system has been adopted to improve engine performance at high engine speed. (L3 engine)
- Variable valve timing control system has been adopted to improve engine performance. (L3 engine)
- Variable intake-air system (VIS) has been adopted to improve engine torque characteristics and combustion efficiency. (L3 engine)

Improved emission performance

- Variable valve timing control system has been adopted. (L3 engine)
- Variable tumble control system (VTCS) has been adopted.
- New fuel injection timing control has been adopted.
- Manifold absolute pressure correction has been adopted to IAC control and fuel injection control.

Weight reduction

- Resin fuel tank has been adopted.

Improved serviceability

- Nonadjustable ignition timing has been adopted.
- Nonadjustable IAC has been adopted.
- Quick release connectors have been adopted on all joints of fuel lines.
- KOEO/KOER self-test function has been adopted.
- Pending code storage process has been changed.
- MIL illumination conditions for the second drive cycle type have been changed.

SPECIFICATIONS

A6E390218881T03

Item		L8, LF, L3
Air cleaner element	Type	Paper element (oil permeated)
IAC valve	Type	Duty control
Fuel injector	Type	Hi-ohmic
	Type of fuel delivery	Top-feed
	Type of drive	Voltage
Pressure regulator	Regulating pressure (kPa {kgf/cm^2, psi})	440 {4.5, 64}
Fuel tank	Capacity (L {US qt, lmp qt})	64 {68, 56}
Fuel	Specification	Unleaded (RON 95 or above)
Catalyst	Type	TWC (monolithic)
EGR control	Type	Stepping motor type
Evaporative emission control system	Type	Canister type
PCV system	Type	Closed type

CONTROL SYSTEM DIAGRAM

A6E390218881T04

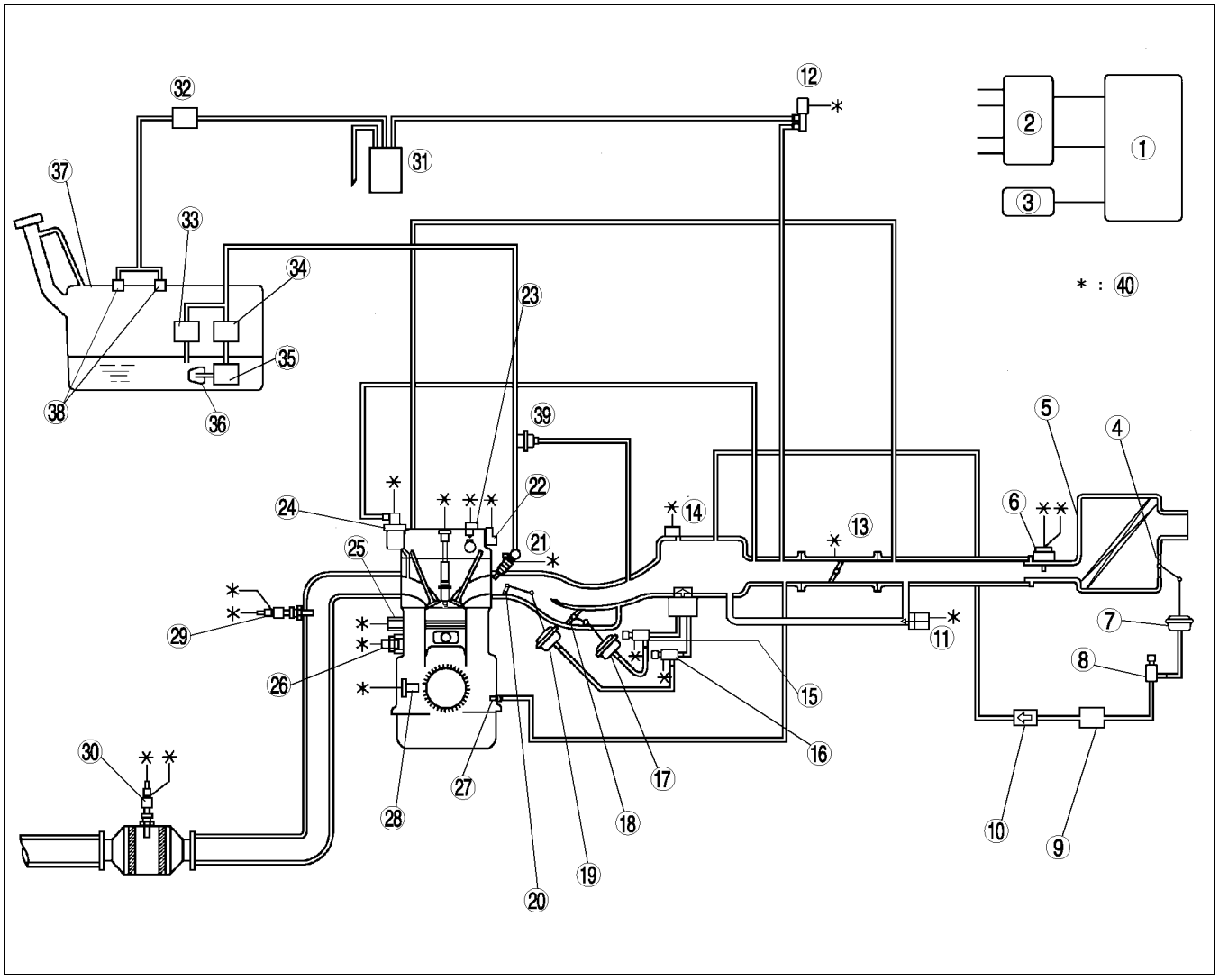

A6E3902T000

1	PCM
2	Ignition coil
3	Generator
4*	VAD shutter valve
5	Air cleaner
6	MAF sensor
7*	VAD shutter valve actuator
8*	VAD control solenoid valve
9*	Vacuum chamber
10*	VAD check valve (one-way)
11	IAC
12	Purge solenoid valve
13	TP sensor
14	MAP sensor
15*	VIS control solenoid valve
16	Variable tumble control solenoid valve
17*	VIS shutter valve actuator
18*	VIS shutter valve
19	VTCS shutter valve actuator
20	VTCS shutter valve

21	Fuel injector
22*	OCV
23	CMP sensor
24	EGR valve
25	Knock sensor
26	ECT sensor
27	PCV valve
28	CKP sensor
29	Heated oxygen sensor (front)
30	Heated oxygen sensor (rear)
31	Charcoal canister
32	Check valve (two-way)
33	Pressure regulator
34	Fuel filter (high pressure)
35	Fuel pump
36	Fuel filter (low pressure)
37	Fuel tank
38	Rollover valve
39	Pulsation damper
40	To PCM

* : Equipped for L3 engine model

CONTROL SYSTEM WIRING DIAGRAM

A6E390218881T05

With Immobilizer System

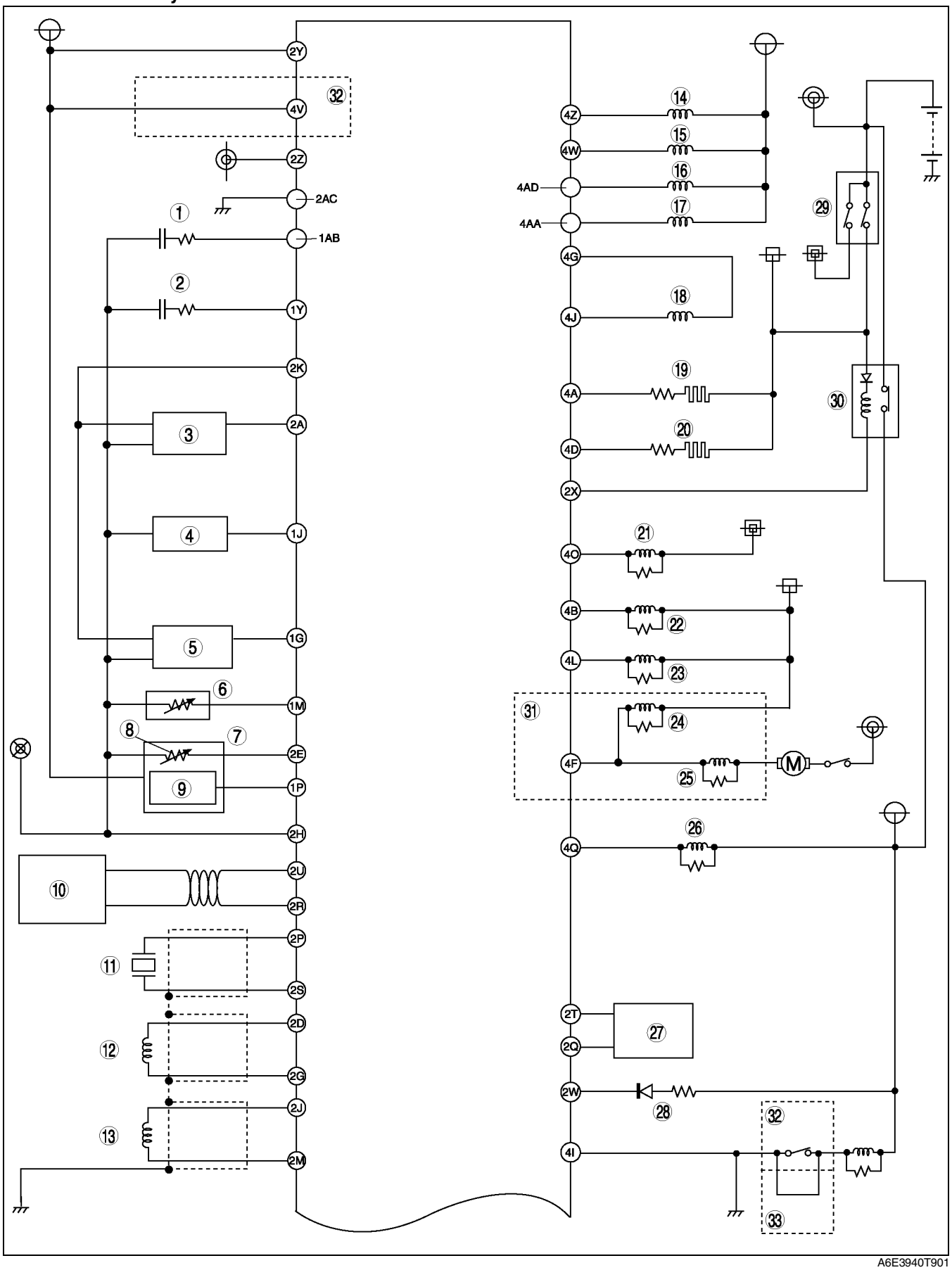

A6E3940T901

1	Heated oxygen sensor (front)
2	Heated oxygen sensor (rear)
3	TP sensor
4	MAP sensor
5	BARO sensor
6	ECT sensor
7	MAF/IAT sensor
8	IAT sensor
9	MAF sensor
10	Controller area network (CAN)
11	Knock sensor
12	CKP sensor
13	CMP sensor
14	Fuel injector No.1
15	Fuel injector No.2
16	Fuel injector No.3
17	Fuel injector No.4

18	IAC
19	Oxygen sensor heater (front)
20	Oxygen sensor heater (rear)
21	A/C relay
22	Cooling fan relay
23	Cooling fan relay
24	Cooling fan relay
25	Cooling fan relay
26	Fuel pump relay
27	Coil
28	Security light
29	Ignition switch
30	Main relay
31	L8, LF (Intensely hot area) and L3 engine models
32	ATX model
33	MTX model

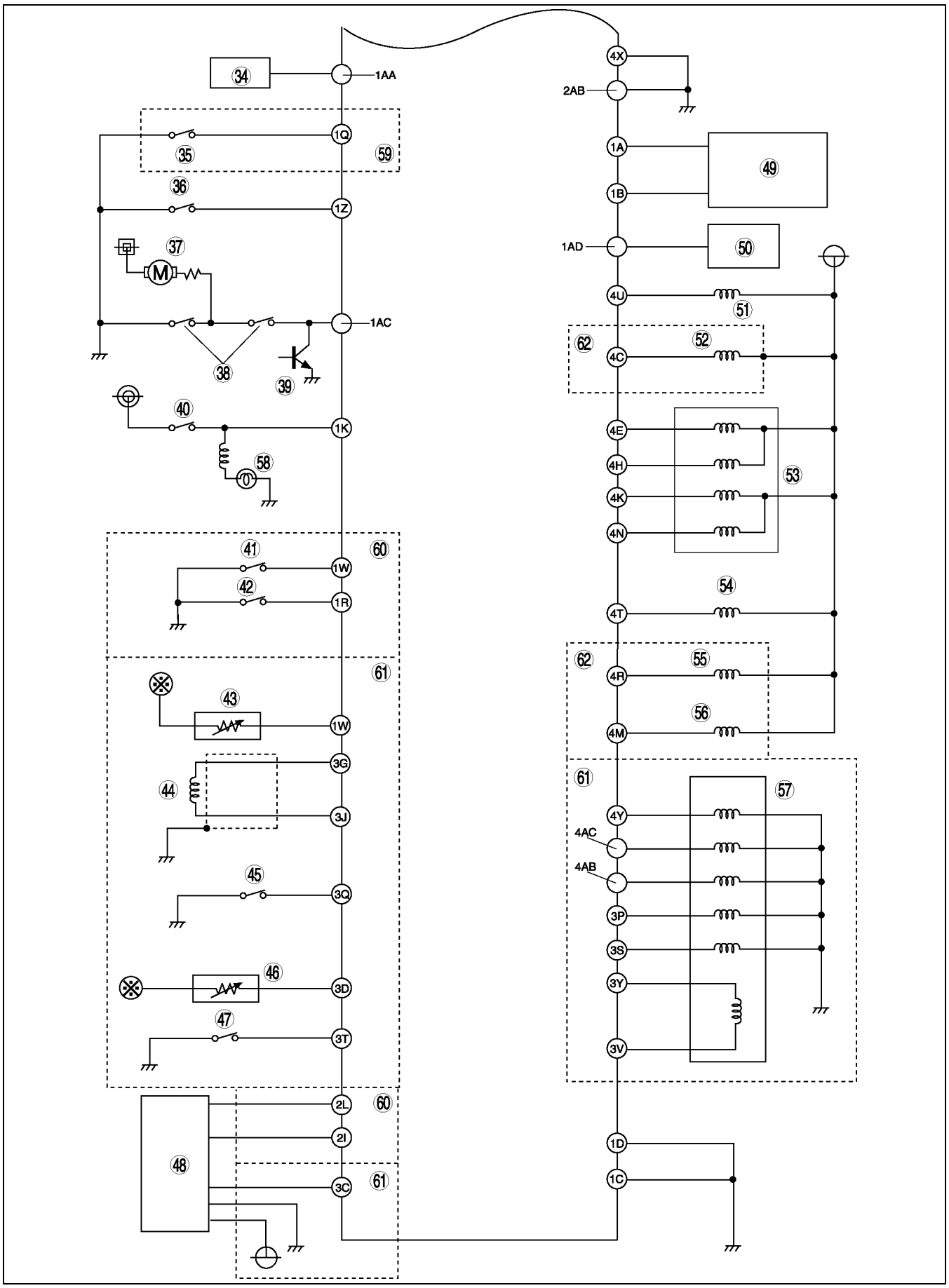

A6E3940T903

34	Generator
35	Refrigerant pressure switch (middle)
36	PSP switch
37	Blower motor
38	Refrigerant pressure switch (high and low)
39	A/C switch
40	Brake switch
41	Neutral switch
42	Clutch switch
43	TR switch
44	Turbine speed sensor
45	HOLD switch
46	TFT sensor
47	Oil pressure switch
48	VSS

49	Ignition coil
50	Generator
51	Purge solenoid valve
52	VAD control solenoid valve
53	EGR valve
54	Variable tumble control solenoid valve
55	VIS control solenoid valve
56	OCV
57	Valve body
58	Brake light
59	L8, LF (Intensely hot area) and L3 engine models
60	MTX model
61	ATX model
62	L3 engine model

Without Immobilizer System

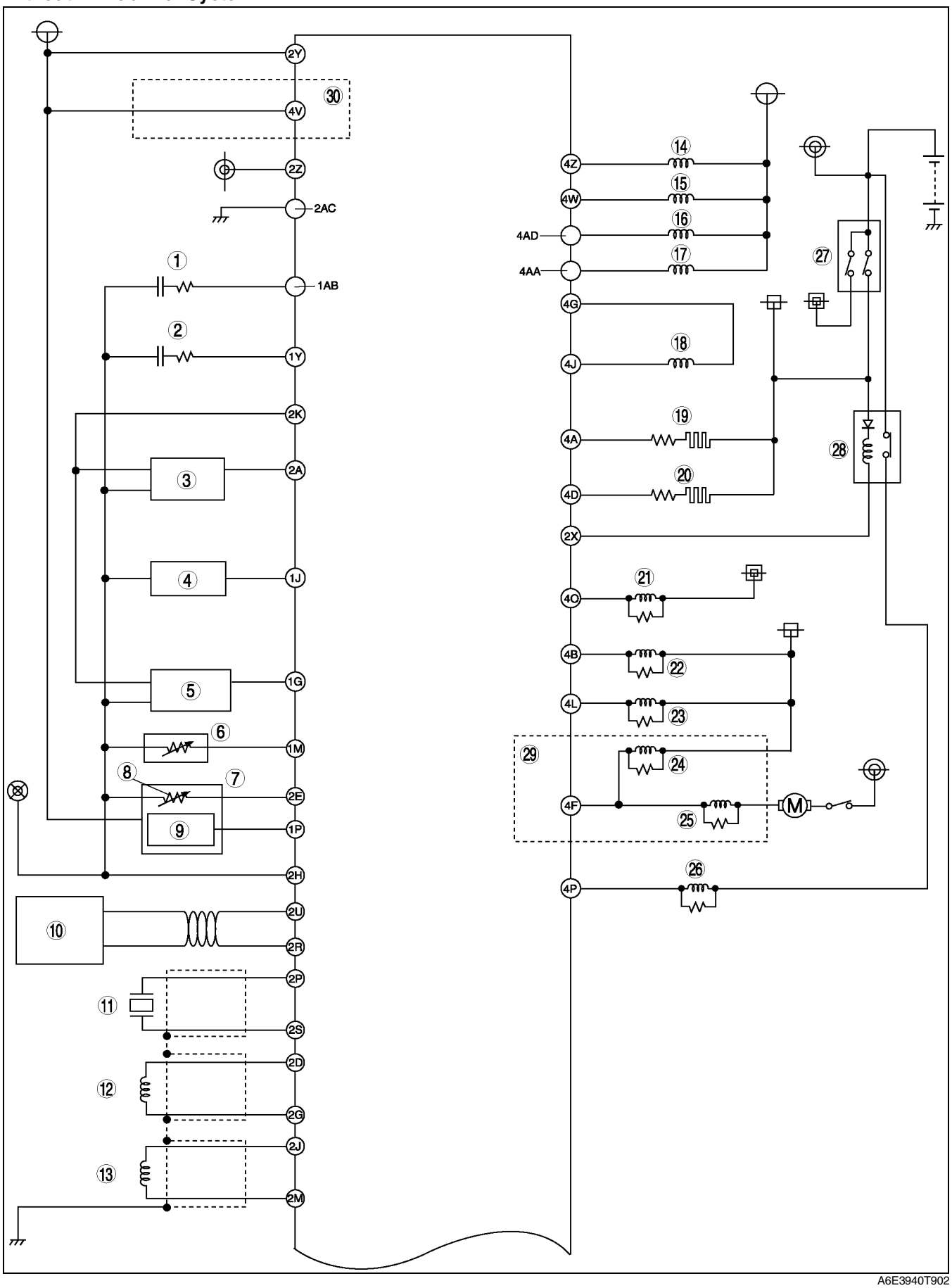

A6E3940T902

1	Heated oxygen sensor (front)
2	Heated oxygen sensor (rear)
3	TP sensor
4	MAP sensor
5	BARO sensor
6	ECT sensor
7	MAF/IAT sensor
8	IAT sensor
9	MAF sensor
10	Controller area network (CAN)
11	Knock sensor
12	CKP sensor
13	CMP sensor
14	Fuel injector No.1
15	Fuel injector No.2

16	Fuel injector No.3
17	Fuel injector No.4
18	IAC
19	Oxygen sensor heater (front)
20	Oxygen sensor heater (rear)
21	A/C relay
22	Cooling fan relay
23	Cooling fan relay
24	Cooling fan relay
25	Cooling fan relay
26	Fuel pump relay
27	Ignition switch
28	Main relay
29	L8, LF (Intensely hot area) and L3 engine models
30	ATX model

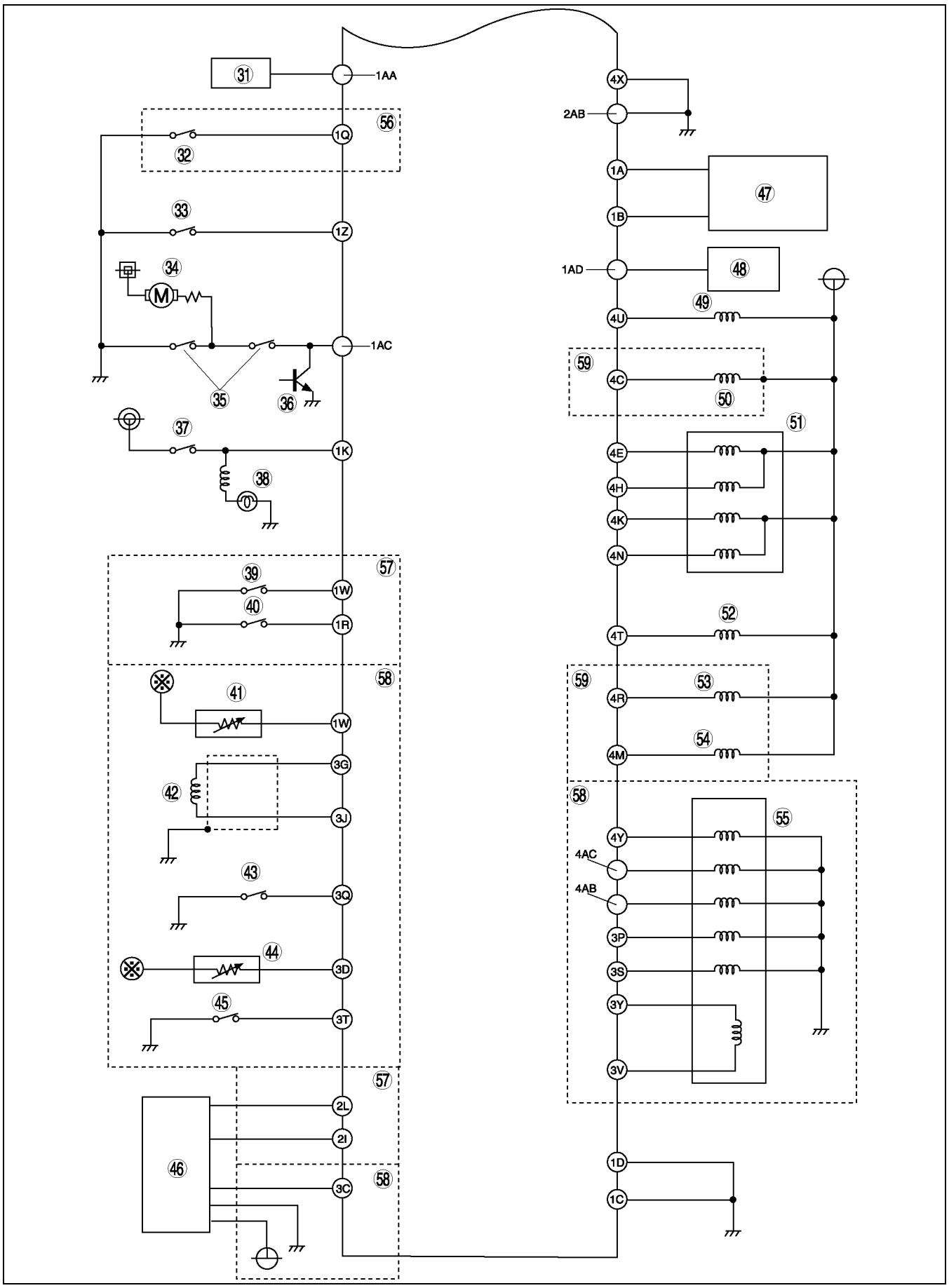

A6E3940T904

31	Generator
32	Refrigerant pressure switch (middle)
33	PSP switch
34	Blower motor
35	Refrigerant pressure switch (high and low)
36	A/C switch
37	Brake switch
38	Brake light
39	Neutral switch
40	Clutch switch
41	TR switch
42	Input/turbine speed sensor
43	HOLD switch
44	TFT sensor
45	Oil pressure switch

46	VSS
47	Ignition coil
48	Generator
49	Purge solenoid valve
50	VAD control solenoid valve
51	EGR valve
52	Variable tumble control solenoid valve
53	VIS control solenoid valve
54	OCV
55	Valve body
56	L8, LF (Intensely hot area) and L3 engine models
57	MTX model
58	ATX model
59	L3 engine model

F

INTAKE-AIR SYSTEM

INTAKE-AIR SYSTEM OUTLINE

A6E391013000T01

- The function, structure and operation of each part in the intake-air system of the Mazda6 (GG) L3, LF, and L8 engine models are essentially carried over from the current 323 (BJ) FS engine models, except for the following:
  - — A non AAS type throttle body has been adopted to improved serviceability.
  - — A resin intake manifold has been adopted to reduce weight.
  - — The variable air duct (VAD) system has been adopted to improved the engine performance.
  - — Variable intake-air system (VIS) has been adopted. Same function as VICS of current 323 (BJ) FS engine models.

×: Applied
–: Not applied

Item	Mazda6 (GG)			Current 323 (BJ) FS	Remark for new model
	L3	LF	L8		
Resonance chamber	×				Same function as current 323 (BJ) FS engine models
Air cleaner	×				Same function as current 323 (BJ) FS engine models
Throttle body	×				Same function as current 323 (BJ) FS engine models AAS has been eliminated due to automatic adjustment of idle speed
IAC valve	×				Same function as current 323 (BJ) FS engine models
Intake manifold	×				Same function as current 323 (BJ) FS engine models
Dynamic chamber	×				Same function as current 323 (BJ) FS engine models
VIS	×	–		×	Same function as VICS of current 323 (BJ) FS engine models
VTCS	×			–	Same function as current MX-5 (NB) BP engine models
VAD system	×	–			Newly adopted

INTAKE-AIR SYSTEM STRUCTURAL VIEW

A6E391013000T02

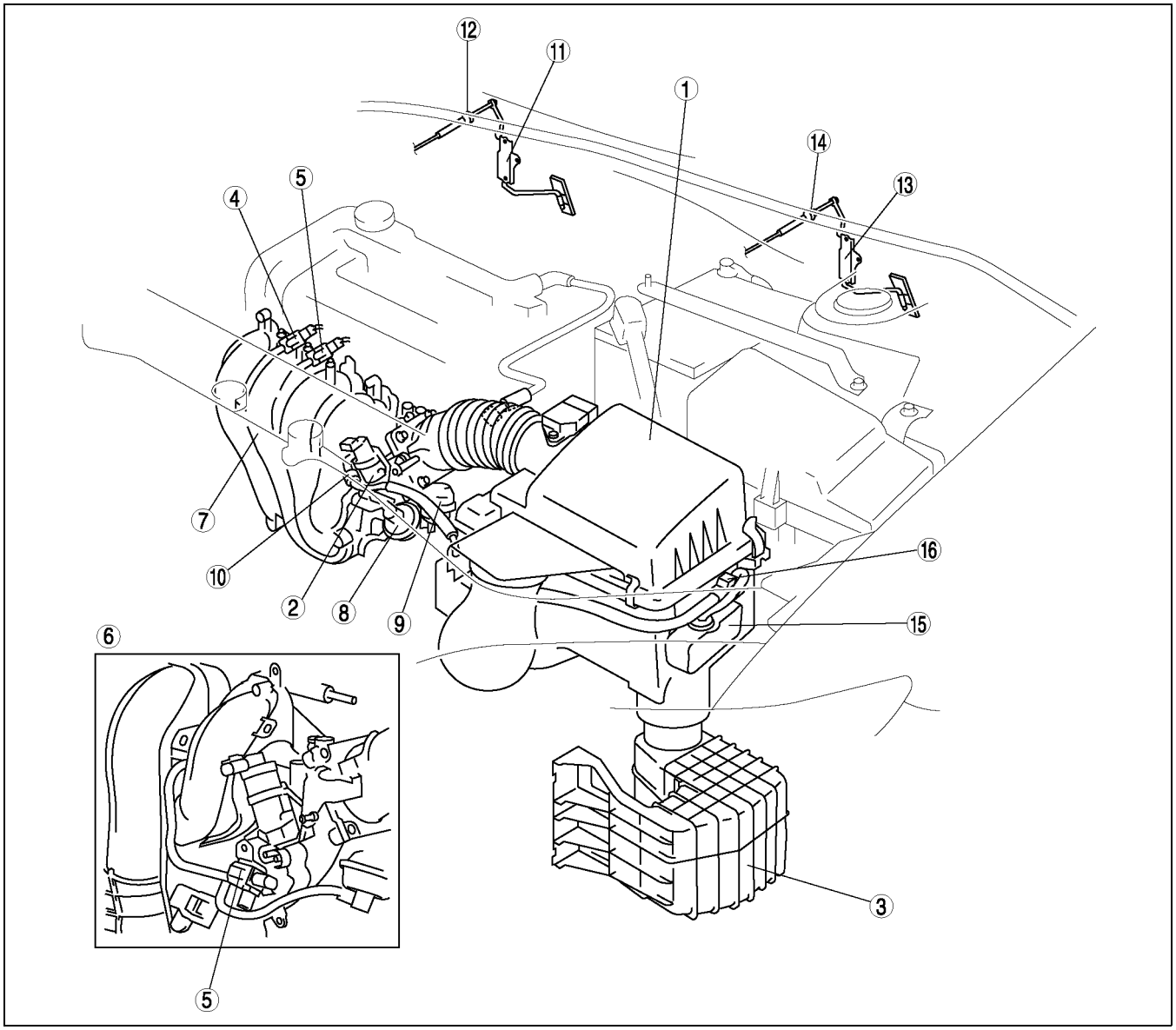

A6E3910W036

1	Air cleaner
2	IAC valve
3	Resonance chamber
4	VIS control solenoid valve (L3)
5	Variable tumble control solenoid valve
6	L8, LF engine models
7	Intake manifold
8	VIS shutter valve actuator (L3)

9	VTCS shutter valve actuator
10	VAD check valve (one-way) (L3)
11	Accelerator pedal (R.H.D.)
12	Accelerator cable (R.H.D.)
13	Accelerator pedal (L.H.D.)
14	Accelerator cable (L.H.D.)
15	VAD shutter valve (L3)
16	VAD control solenoid valve (L3)

VARIABLE AIR DUCT (VAD) SYSTEM OUTLINE (L3)

A6E391013000T03

Outline

- The VAD control system opens the VAD shutter valve in the air cleaner only at high engine speeds not decrease at high engine speeds due to insufficient mass airflow amount.

Structure

- The VAD system is composed of VAD shutter valve, VAD control solenoid valve, VAD vacuum chamber, VAD check valve (one-way).

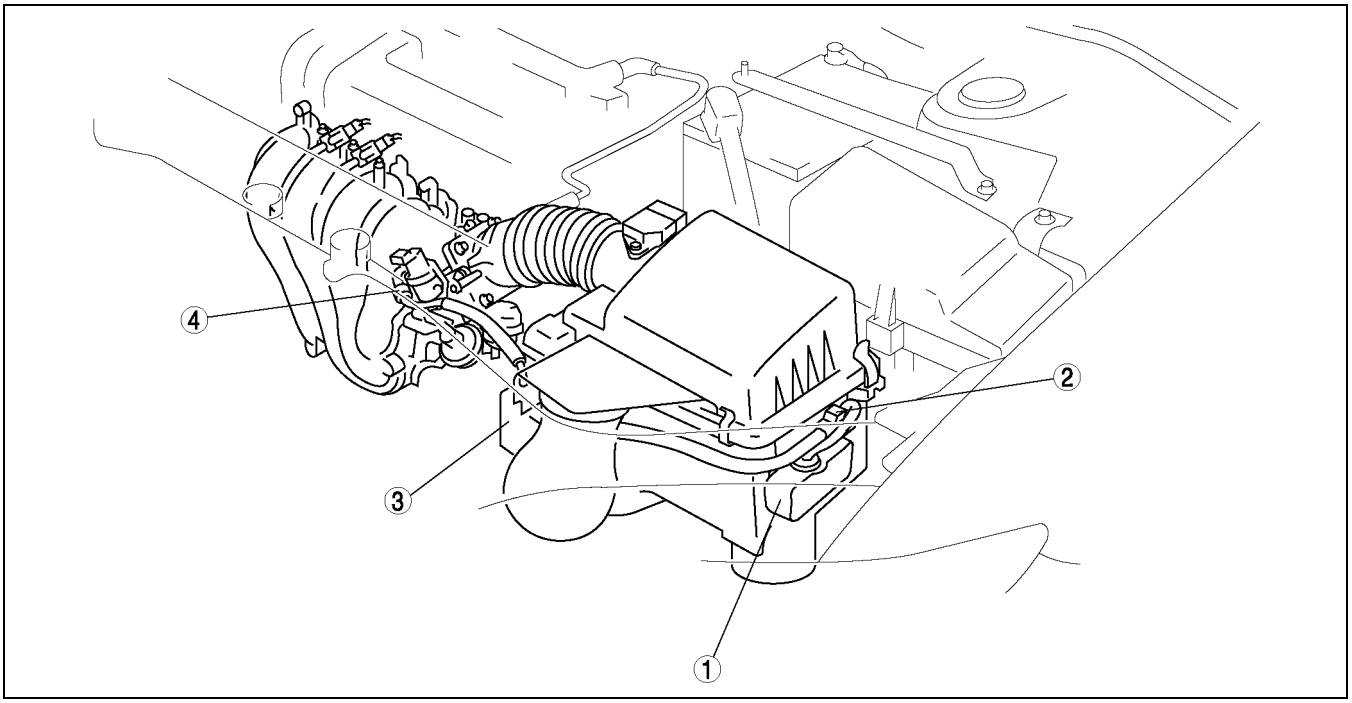

A6E3910W029

1	VAD shutter valve	3	VAD vacuum chamber
2	VAD control solenoid valve	4	VAD check valve (one-way)

VARIABLE AIR DUCT (VAD) SHUTTER VALVE DESCRIPTION (L3)

A6E391013000T04

Function

- Opens and closes the shutter valves.

Structure

- The VAD shutter valve actuator is composed of a rod, diaphragm chamber, and spring.

Operation

- Normally, the rod is pushed by the force of the spring, opening the shutter valve. When intake manifold vacuum is applied to the diaphragm chamber, the rod is pulled, closing the shutter valve.

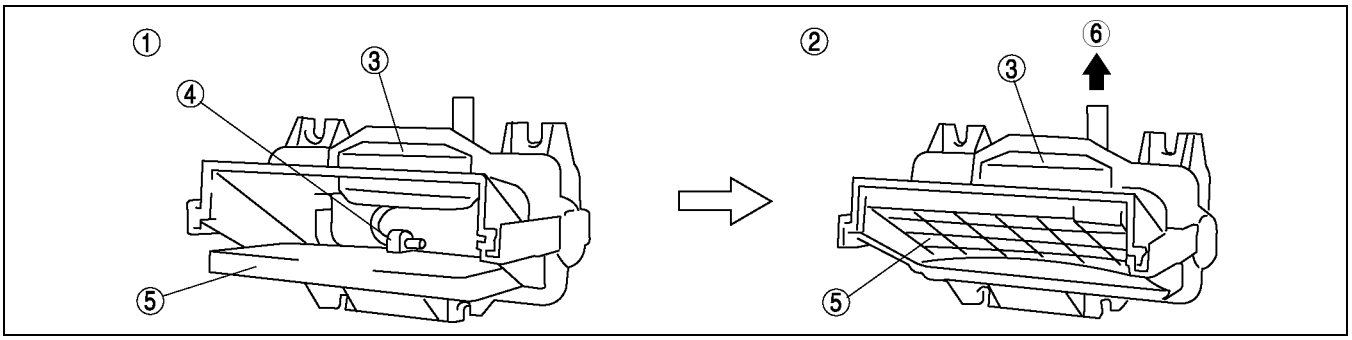

A6E3910W027

1	Shutter valve open	4	Rod
2	Shutter valve close	5	VAD shutter valve
3	VAD shutter valve actuator	6	Intake manifold vacuum

VARIABLE AIR DUCT (VAD) SOLENOID VALVE DESCRIPTION (L3)

A6E391013000T05

Function
- Switches the intake manifold vacuum passage between the intake manifold and the actuator.

Structure
- Composed of a solenoid coil, spring, plunger, and filter.

Operation
Energized
- The plunger is pulled back to open the air passage between the A and B ports, which applies the atmosphere to the VAD shutter valve actuator.

De-energized
- The plunger is returned forward to open the air passage between the B and C ports, which applies the intake manifold vacuum VAD shutter valve actuator.

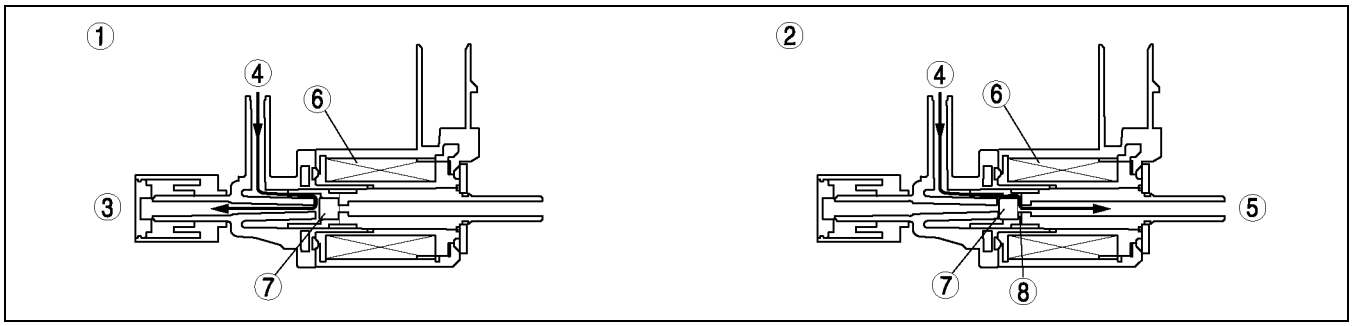

A6E3910W026

1	Energized
2	De-energized
3	Port A (to atmosphere)
4	Port B (to actuator)

5	Port C (to intake manifold)
6	Coil
7	Plunger
8	Spring

VARIABLE AIR DUCT (VAD) CHECK VALVE (ONE-WAY) DESCRIPTION (L3)

A6E391013000T06

Function
- The VAD check valve (one-way) maintain the vacuum in the VAD vacuum chamber.

Structure
- The VAD check valve (one-way) is composed of a valve.

Operation
- The VAD check valve (one-way) allows air flow only from VAD vacuum chamber to intake manifold.

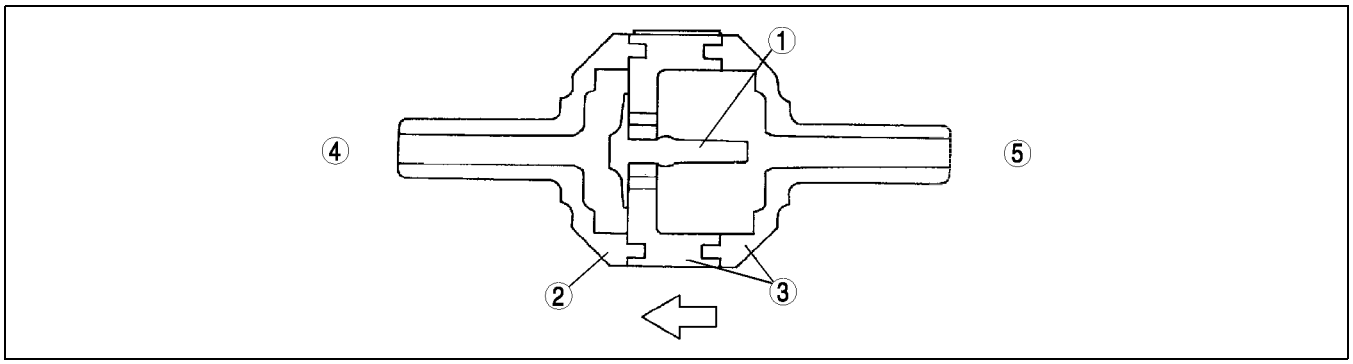

A6E3910W035

1	Check valve
2	Green
3	White

4	Intake manifold
5	VAD vacuum chamber

FUEL SYSTEM

FUEL SYSTEM OUTLINE

A6E391201006T01

- The function, structure and operation of each part in the fuel system of the Mazda6 (GG) L3 engine model are the same as those of the 323 (BJ) FS engine models except for the following:
  — Mechanical returnless fuel system has been adopted.

× : Applied

Item	Mazda6 (GG)			323 (BJ) FS	Remark for new model
	L3	LF	L8		
Fuel tank	×				Same as current 323 (BJ) FS engine models
Fuel pump unit (Built-in fuel filter (high-and low-pressure))	×				New part adopted
Quick release connector (fuel distributor side)	×				Same as current 323 (BJ) FS engine models (fuel distributor side)
Quick release connector (fuel tank side)	×				
Quick release connector (engine room side)	×				
Pulsation dumper	×				Same as current 323 (BJ) FS engine models
Pressure regulator	×				Integrated pressure regulator with the fuel pump unit
Fuel injector	×				Same as current 323 (BJ) FS engine models
Nonreturn valve	×				Same as current 323 (BJ) FS engine models

FUEL SYSTEM STRUCTURAL VEW

A6E391201006T02

Engine Room Side

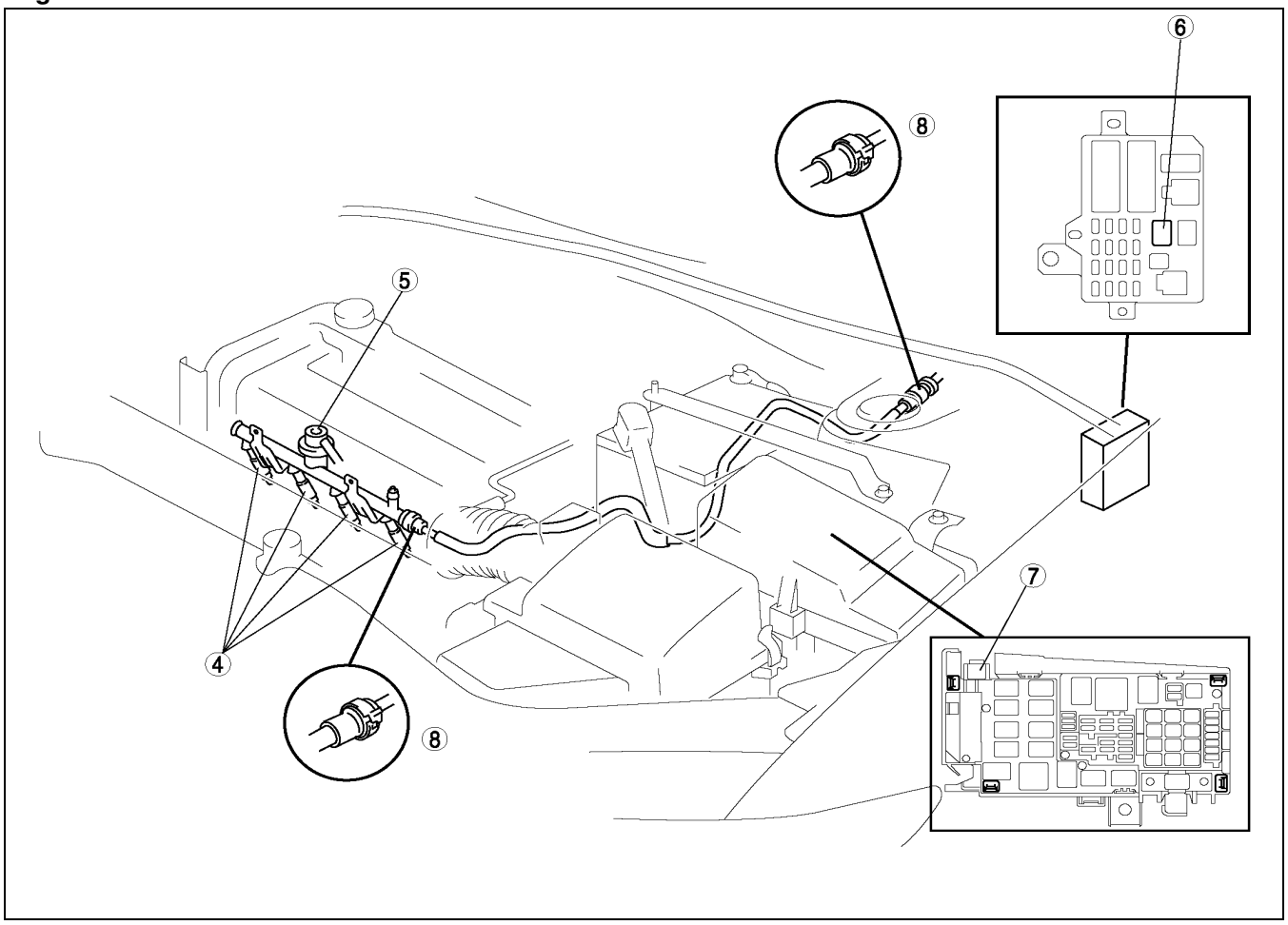

A6E3912W048

Fuel tank side

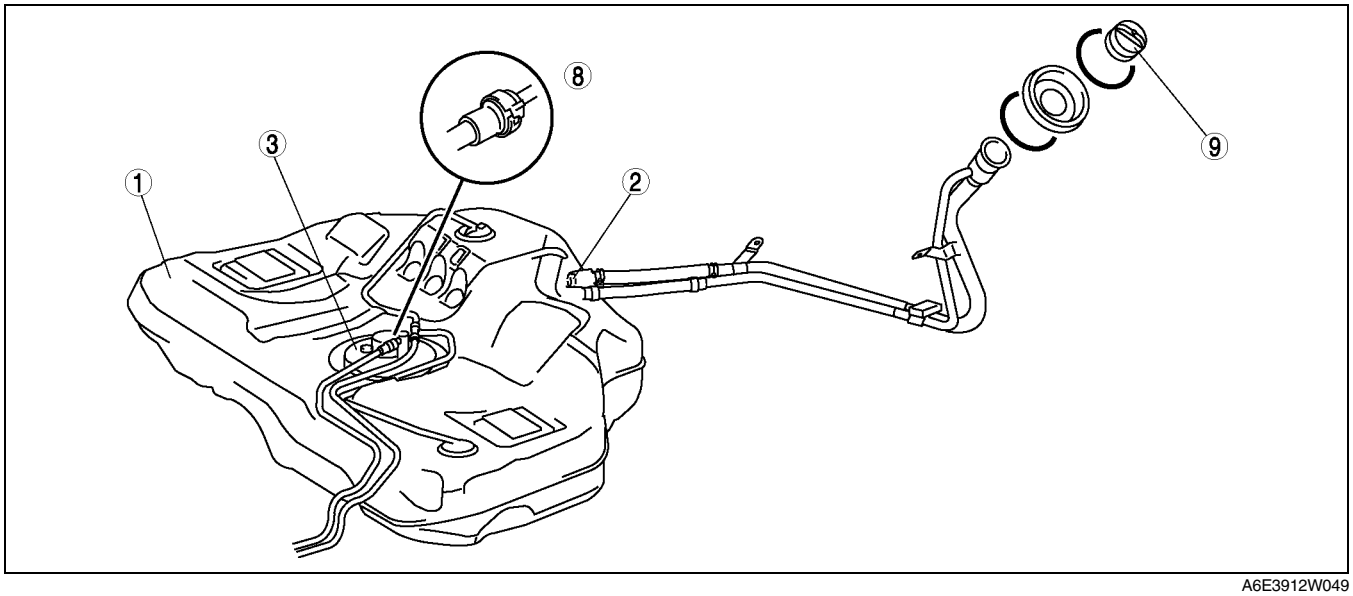

A6E3912W049

1	Fuel tank
2	Nonreturn valve
3	Fuel pump unit
4	Fuel injector
5	Pulsation damper

6	Fuel pump relay
7	Check connector
8	Quick release connector
9	Fuel filler cap

FUEL PUMP UNIT DESCRIPTION

A6E391213350T01

Note
- It is normal to hear the fuel pump operating when the ignition switch is turned to the ON position.

Function
- Due to the adoption of the mechanical returnless fuel system.
- The fuel pump unit, except for the fuel gauge sender unit, is integrated for confidentiality protection.
- To prevent decreased engine output from a lack of fuel supply when the vehicle is turning, the fuel pump has been designed so the fuel supply always remains constant in the fuel reservoir cup.
- Fuel stored in the fuel reservoir cup is supplied from two lines: the check valve (one-way) and the jet pump.

Structure

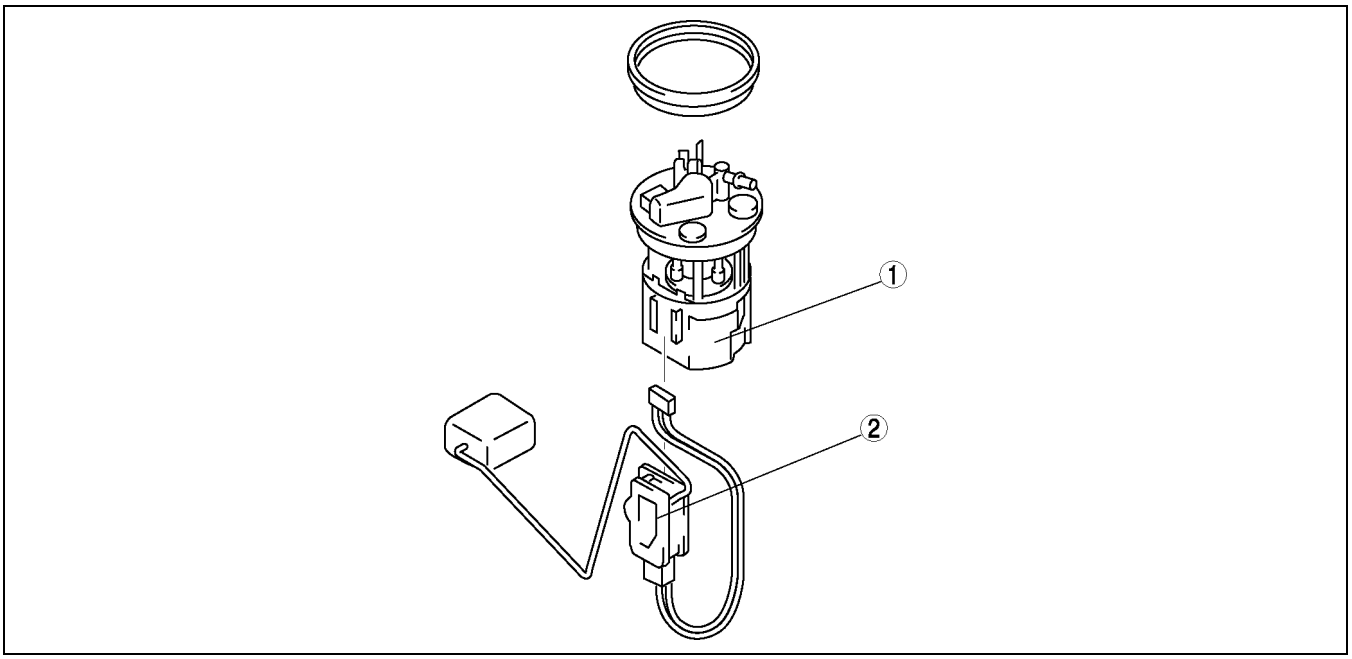

A6E3912W024

Fuel flow

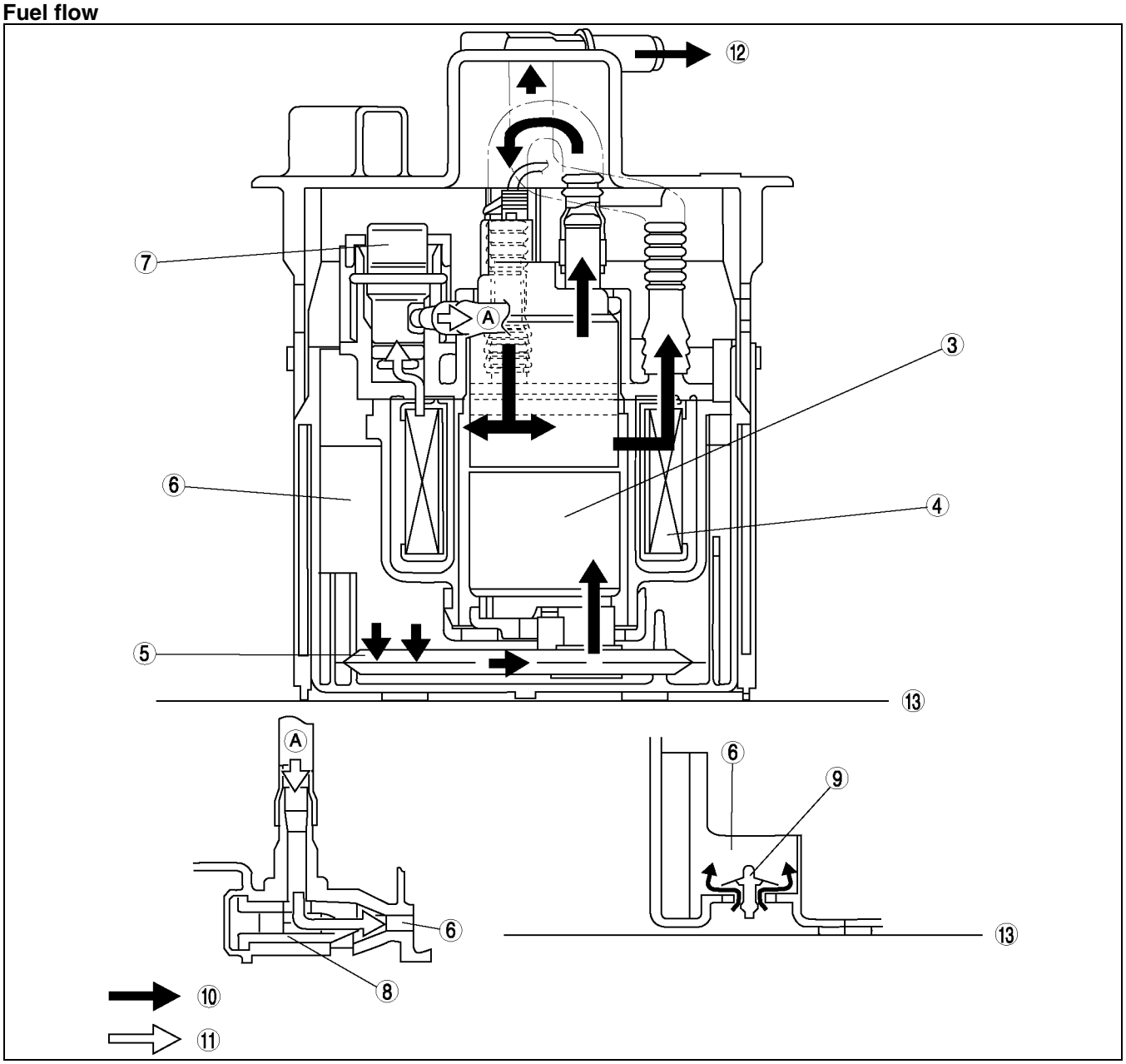

A6E3912W035

1	Fuel pump unit
2	Fuel gauge sender unit
3	Fuel pump
4	Fuel filter (high-pressure)
5	Fuel filter (low-pressure)
6	Fuel reservoir cup
7	Pressure regulator

8	Fuel jet pump
9	One-way valve
10	Main fuel flow
11	Return fuel flow
12	To fuel distributor
13	Fuel tank

EXHAUST SYSTEM

EXHAUST SYSTEM OUTLINE

A6E391440000T01

Features

- The exhaust manifold is located behind the engine.
- This layout allows for shorter exhaust pipes and improved exhaust efficiency. Moreover, due to the shorter distance to the catalytic converter, temperature decrease of exhaust emission is prevented and catalyst is more efficient.
- Temperature decrease of exhaust emission is further prevented with double layer exhaust manifold pipes.

EXHAUST SYSTEM STRUCTURAL VIEW

A6E391440000T02

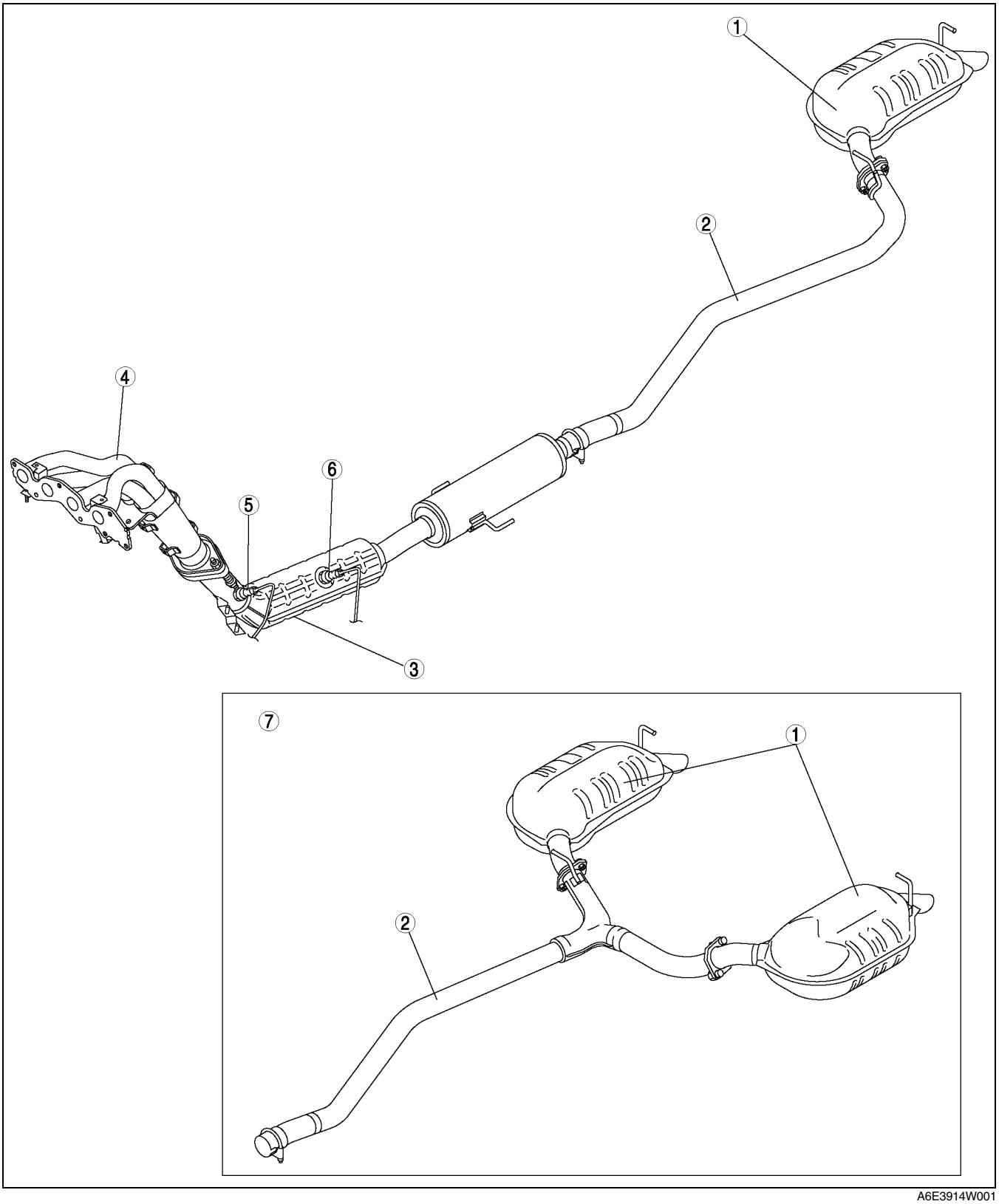

A6E3914W001

1	Main silencer
2	Middle pipe
3	TWC
4	Exhaust manifold

5	HO2S (front)
6	HO2S (rear)
7	L3 engine model

EMISSION SYSTEM

OUTLINE

A6E391601007T01

- The function, structure and operation of each part in the emission system of the Mazda6 (GG) L3, LF, and L8 engine models are the same as those of the MPV (LW) FS engine models, except for the following:
  — Charcoal canister has been changed.
  — The pulsation reduce chamber has been adopted. (R.H.D.)

×: Applied
–: Not applied

Item	Mazda6 (GG)			Current MPV (LW) FS	Remark for new model
	L3	LF	L8		
Rollover valve	×				Same as current MPV (LW) FS engine models
Charcoal canister	×				Same as current MPV (LW) FS engine models
Evaporative gas check valve (one-way)	×				Same as current MPV (LW) FS engine models
Purge solenoid valve	×				Same as current MPV (LW) FS engine models
PCV valve	×				Same function and operation as current MPV (LW) FS engine models
TWC	×				Same function as current MPV (LW) FS engine models
EGR valve	×				Same function and operation as current MPV (LW) FS engine models
Pulsation reduce chamber (R.H.D.)	×			–	Newly adopted

EMISSION SYSTEM STRUCTURAL VIEW

A6E391601007T02

Engine room side

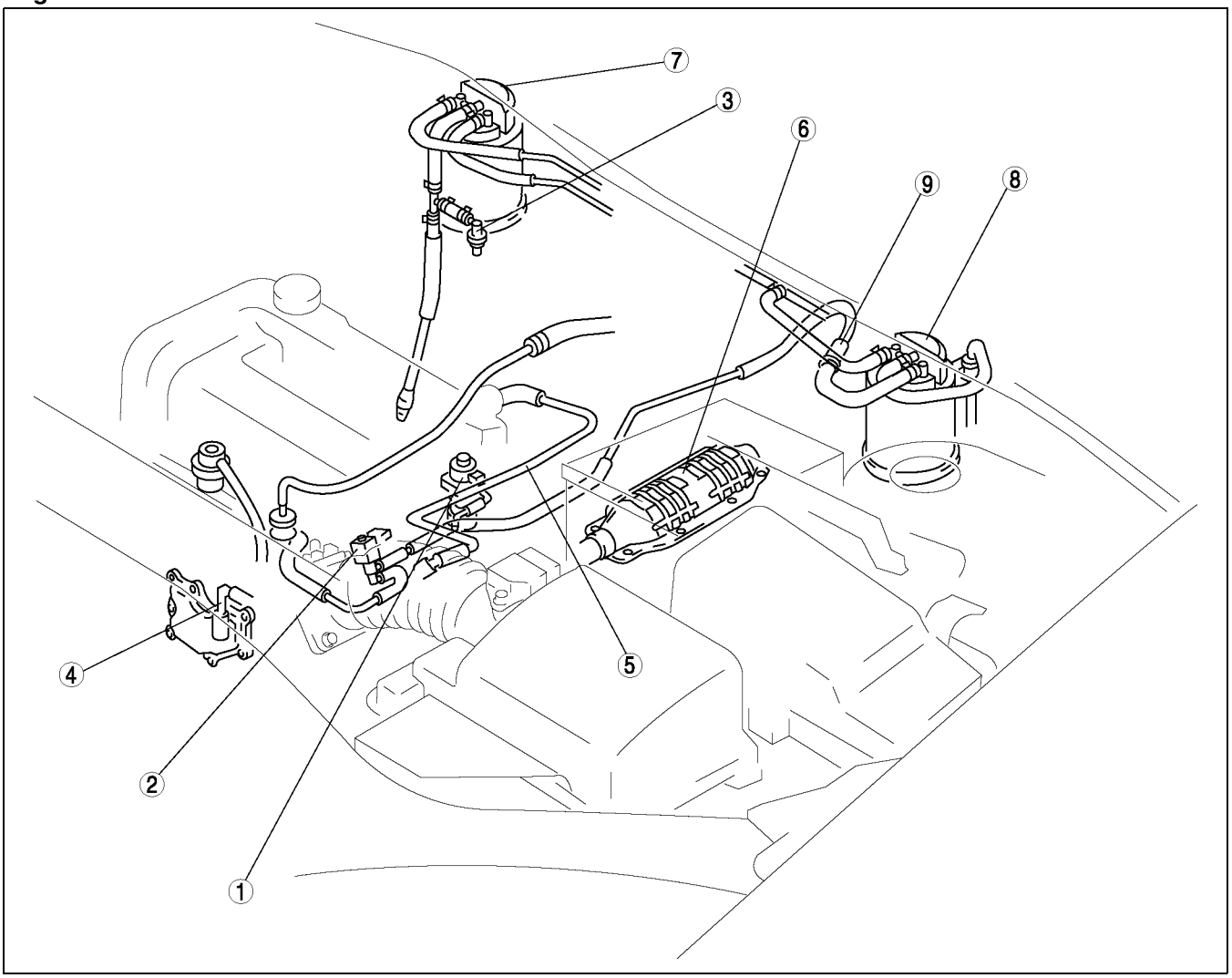

A6E3916W024

Fuel tank side

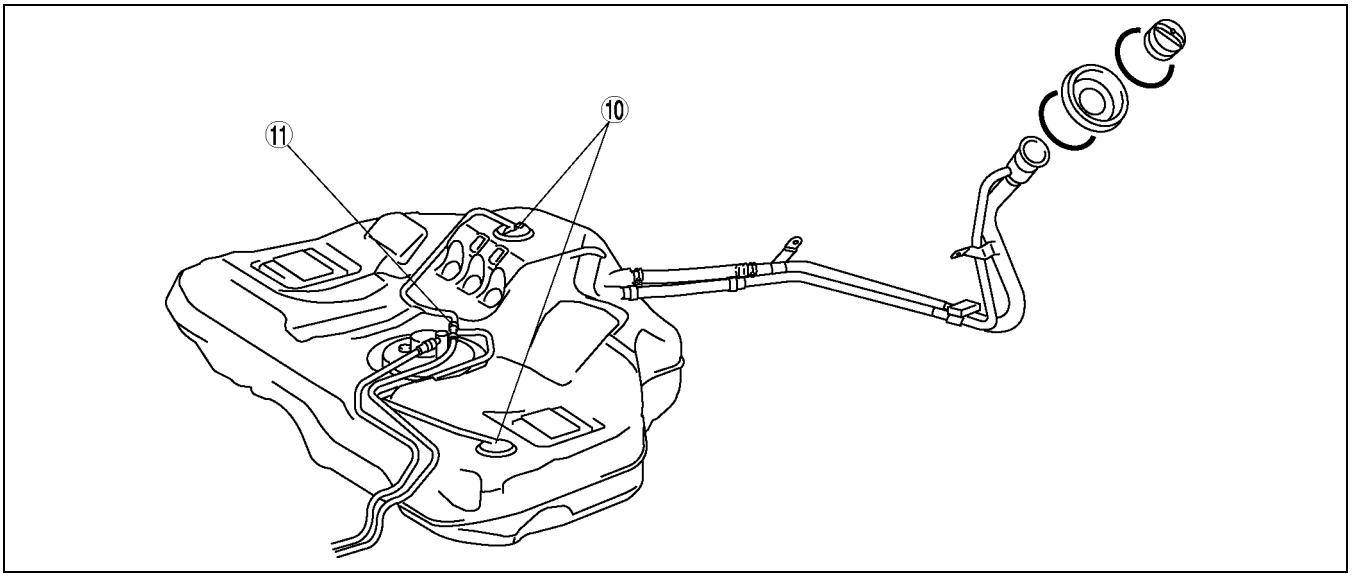

A6E3916W025

1	EGR valve
2	Purge solenoid valve
3	Evaporative gas check valve (one-way) (L.H.D.)
4	PCV valve
5	Ventilation hose
6	TWC
7	Charcoal canister (L.H.D.)
8	Charcoal canister (R.H.D.)
9	Pulsation reduce chamber (R.H.D.)
10	Rollover valve
11	Check valve (two-way)

PULSATION REDUCE CHAMBER DESCRIPTION

- A pulsation reduce chamber has been adopted between the purge solenoid valve and the charcoal canister to eliminate pulsation that occurs during the purge solenoid valve operation, preventing the pulsation from being transmitted to the charcoal canister.

1	Pulsation reduce chamber
2	To purge solenoid valve
3	To charcoal canister

A6E391601007T03

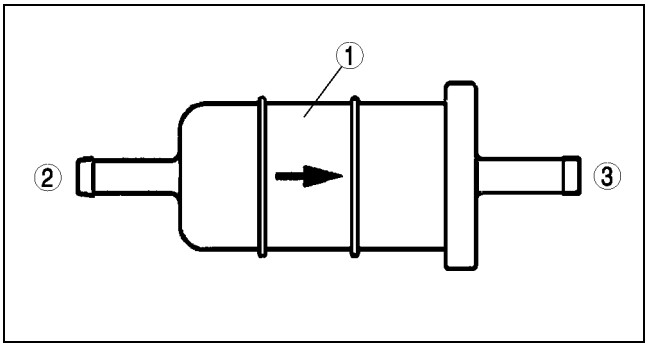

A6E3916W022

THREE-WAY CATALYTIC CONVERTER (TWC) DESCRIPTION

A6E391620500T01

Features

- Due to the shorter distance to the catalytic converter, temperature decrease of exhaust emission is prevented and catalyst is more efficient.
- Temperature decrease of exhaust emission is further prevented with double layered exhaust manifold pipes.

CONTROL SYSTEM

OUTLINE

A6E394018881T01

- The construction and operation of the Mazda6 (GG) is essentially carried over from that of the current MPV (LW) FS engine model, except for the following.

New Devices

- MAP sensor which monitoring the intake manifold absolute pressure is the same function as BARO sensor.

Similar Devices

CKP sensor

- Output wave form is different.

CMP sensor

- Output wave form is different.

New Systems

Variable air duct control

- To improve the engine performance at high engine speed.

Controller area network (CAN)

- To simplify the system.

Similar Systems

Idle air control (IAC)

- Same function as MPV (LW) FS engine model except for the followings.
  - — Adopt the MAP factor to the feedback correction to improve the precise control.
  - — Idle speed is different to match the vehicle characteristics.

Variable intake-air system (VIS)

- Same function as VICS but operation condition is different to match the vehicle characteristics.

Variable tumble control system (VTCS)

- Same function as MX-5 (NB) but operation condition is different to match the vehicle characteristics.

Variable valve timing control system

- Same function as MX-5 (NB) but operation condition is different to match the vehicle characteristics.

Fuel injection control

- Same function as MPV (LW) FS engine model except for the following.
  - — Adopt the BARO correction to improve the precise control.
  - — Adopt the Rear HO2S feedback correction to improve the emission performance.

Electronic spark advance (ESA) control

- Same control as 626 (GF) FS engine model

Purge control

- Adopt the BARO correction to improve the emission performance

Heated oxygen sensor heater control

- Same control as 323 (BJ) FS engine model

A/C cut-off control

- Operation condition is different to match the vehicle characteristics.

Immobilizer system

- Same function as MPV (LW) FS engine model however it equipped into PCM to simplify the system.

Input Device

×:Applied
—: Not applied

Item	Signal	Mazda6 (GG)	Current MPV (LW) FS	Remark for new model
MAF/IAT sensor	MAF and IAT	×		Same as 323 (BJ) ZM engine model
TP sensor	TP	×		Same function as MPV (LW) FS engine model
MAP sensor	MAP	×	—	Same function as BARO sensor of MPV (LW) FS engine model
ECT sensor	ECT	×		Same function as MPV (LW) FS engine model
CMP sensor	Cylinder identification	×		Same function as MPV (LW) FS engine model Output wave form is different.
CKP sensor	Engine revolution	×		Same function as MPV (LW) FS engine model Output wave form is different.
Knock sensor	Knocking	×		Same function as MPV (LW) FS engine model
HO2S (Front, Rear)	Oxygen concentration	×		Same function as MPV (LW) FS engine model
BARO sensor	BARO	×		Same as MPV (LW) FS engine model
Neutral switch	Load/no load distinction	×		Same as MPV (LW) FS engine model
Clutch switch	Load/no load distinction	×		Same as MPV (LW) FS engine model
Brake switch	Brake pedal condition	×		Same as MPV (LW) FS engine model
PSP switch	P/S oil pump load condition	×		Same function as MPV (LW) FS engine model
VSS	Vehicle speed	×		Same as MPV (LW) FS engine model
A/C switch, refrigerant pressure switch (high, low pressure)	A/C operational	×		Same as MPV (LW) FS engine model
Refrigerant pressure switch (middle pressure)	A/C compressor load	×		Same as MPV (LW) FS engine model
Battery	Battery voltage	×		Same as MPV (LW) FS engine model
Generation voltage (Generator terminal P)	Generation voltage	×		Same as MPV (LW) FS engine model
Immobilizer unit	Immobilizer system communication	×		Same function as MPV (LW) FS engine model

Output Device

×:Applied
—: Not applied

Item	Signal	Mazda6 (GG)	Current MPV (LW) FS	Remark for new model
IAC valve	IAC	×		Same function as MPV (LW) FS engine model Idle speed is different to match vehicle characteristics.
VIS solenoid valve	VIS	×		Same function as VICS of MPV (LW) FS engine model Operation condition is different.
VTCS solenoid valve	VTCS	×	—	Same function as MX-5 (NB) Operation condition is different.
Oil control valve (OCV)	Variable valve timing control	×	—	Same function as MX-5 (NB) Operation condition is different.
Fuel injector	Fuel injection control	×		Same function as MPV (LW) FS engine model Fuel injection timing is different. Add BARO correction Add Rear HO2S feedback correction
Fuel pump relay	Fuel pump control	×		Same as MPV (LW) FS engine model
Ignition coil	ESA control	×		Same as 626 (GF) FS engine model
EGR valve	EGR control	×		Same as MPV (LW) FS engine model
Purge solenoid valve	Purge control	×		Same function as MPV (LW) FS engine model Add BARO correction
Heated oxygen sensor heater (Front, rear)	O2S heater control	×		Same as 323 (BJ) FS engine model
Field coil (Generator terminal D)	Generator control	×		Same as MPV (LW) FS engine model
Cooling fan relay	Electric fan control	×	—	New system adopted
A/C relay	A/C cut-off control	×		Same function as MPV (LW) FS engine model Operation condition is different.
Controller area network (CAN)	Information function	×	—	New system adopted

F

STRUCTURAL VIEW

A6E394018881T02

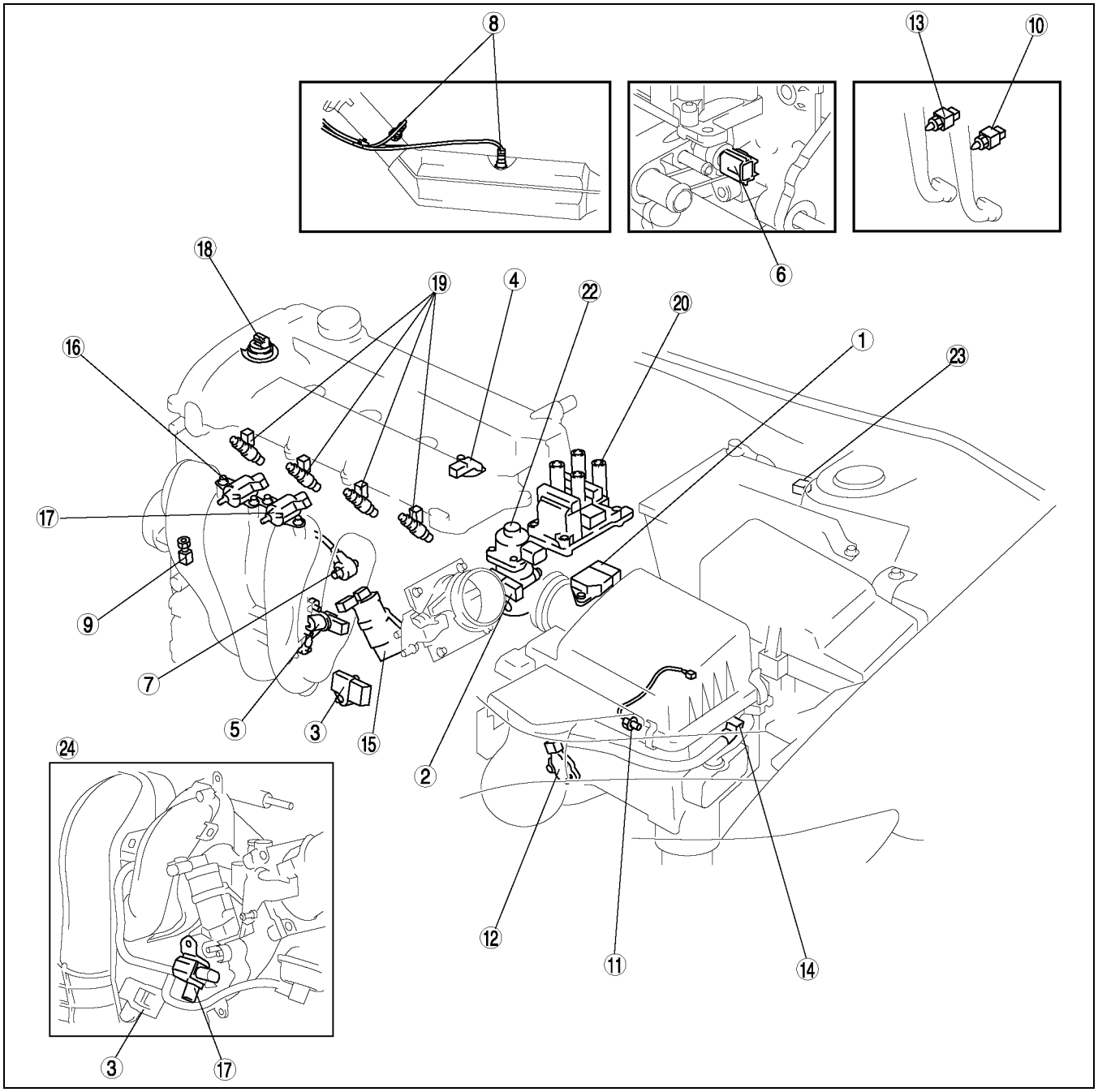

A6E3940T000

1	MAF/IAT sensor
2	TP sensor
3	MAP sensor
4	CMP sensor
5	CKP sensor
6	ECT sensor
7	Knock sensor
8	HO2S (front, rear)
9	P/S pressure switch
10	Clutch switch
11	Neutral switch
12	TR switch

13	Brake switch
14	VAD control solenoid valve
15	IAC valve
16	VIC solenoid valve
17	VTCS solenoid valve
18	OCV
19	Fuel injector
20	Ignition coil
21	Purge valve
22	EGR valve
23	BARO sensor
24	LF and L8 engine models

BLOCK DIAGRAM

A6E394018881T03

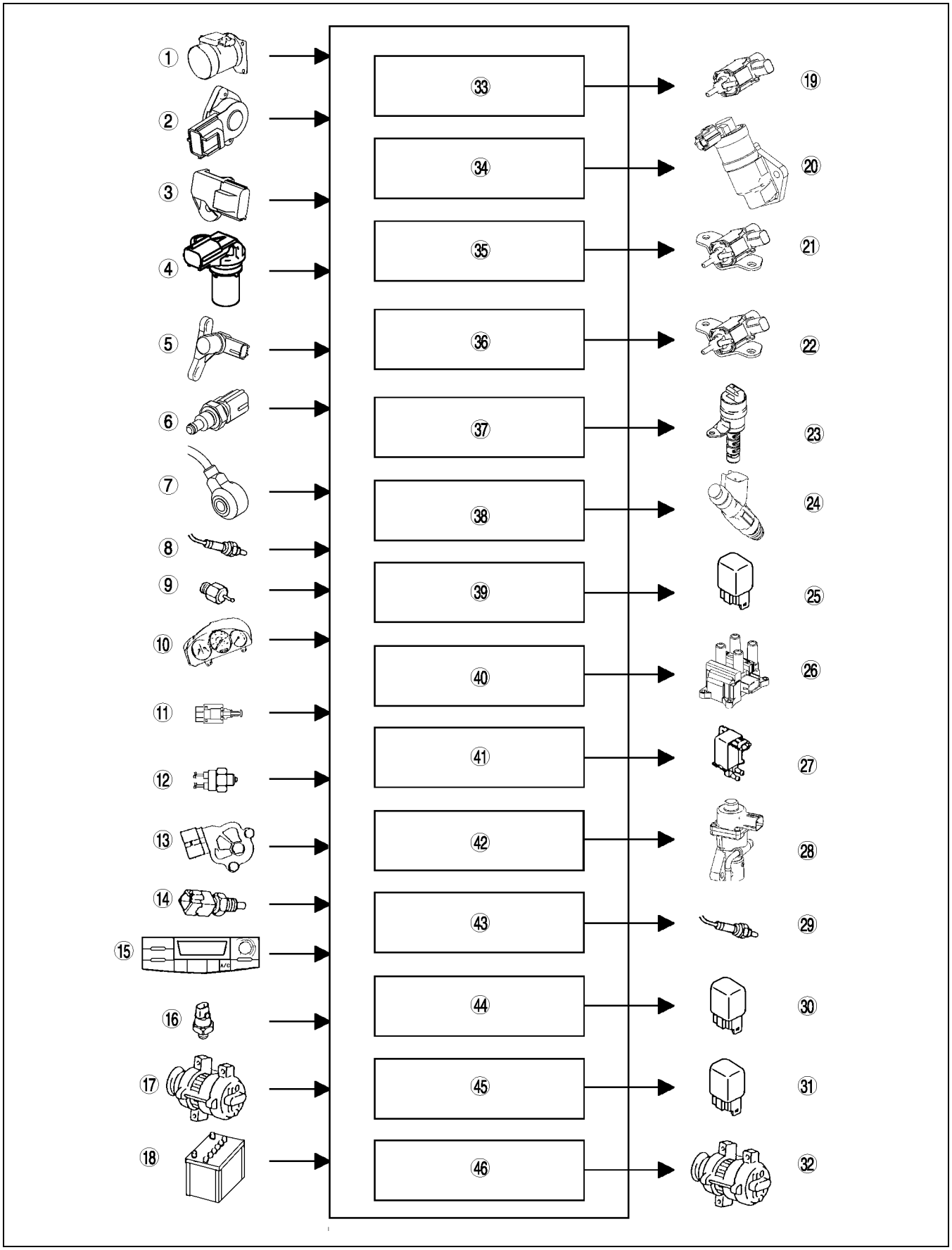

A6E3940T001

1	MAF/IAT sensor
2	TP sensor
3	MAP sensor
4	CMP sensor
5	CKP sensor
6	ECT sensor
7	Knock sensor
8	HO2S (front, rear)
9	P/S pressure switch
10	Vehicle speedometer sensor
11	Clutch switch
12	Neutral switch
13	TR switch
14	Brake switch
15	A/C switch
16	Refrigerant pressure switch
17	Generator (terminal P: generation voltage)
18	Battery
19	VAD control solenoid valve
20	IAC valve
21	VIC solenoid valve
22	VTCS solenoid valve
23	OCV

24	Fuel injector
25	Fuel pump relay
26	Ignition coil
27	Purge valve
28	EGR valve
29	Oxygen sensor heater (front, rear)
30	A/C relay
31	Cooling fan relay
32	Generator (terminal D: field coil)
33	VAD control
34	IAC
35	VIC
36	VTCS
37	Variable valve timing control
38	Fuel injection control
39	Fuel pump control
40	Electronic spark advance (ESA) control
41	Purge control
42	EGR control
43	Oxygen sensor heater control
44	A/C cut-off control
45	Electrical fan control
46	Generator control

CONTROL DEVICES AND CONTROL RELATIONSHIP CHART

A6E394018881T04

Engine Control System
Input devices

x: Applicable

Component	Idle air control (IAC)	Variable air duct (VAD) control	Variable intake-air control	Variable tumble control system (VTCS)	Variable valve timing control	Fuel injection control	Fuel pump control	Electronic spark advance (ESA) control	Purge control	EGR control	Front HO2S heater control	Rear HO2S heater control	A/C cut-off control	Electrical fan control	Generator control	Traction control	Immobilizer system
IAT sensor	x					x		x		x	x	x	x		×		
MAF sensor	x				x	x		x	x	x	x	x					
TP sensor	x	x		x	x	x		x		x	x						
MAP sensor	x					x											
ECT sensor	x	x		x	x	x		x	x	x	x	x		x			
CMP sensor					x	x											
CKP sensor	x	x	x	x	x	x	x	x	x	x	x	x	x				
Knock sensor								x									
Front HO2S						x			x								
Rear HO2S						x											
BARO sensor									x								
Neutral switch	x					x		x	x								
Clutch switch	x					x		x	x				x				
TR switch	x					x		x	x				x				
Brake switch																	
PSP switch	x					x		x									
VSS										×							
A/C switch, refrigerant pressure switch (high, low pressure)	x					x		x					×	×			
Refrigerant pressure switch (middle pressure)														×			
Battery voltage						x		x	x						×		
Generator terminal P (Generation voltage)	x					x		x							×		
ABS/TCS HU/CM																×	
Coil																	×

Output devices

×: Applicable

Component	Idle air control (IAC)	Variable air duct (VAD) control	Variable intake-air control	Variable tumble control system (VTCS)	Variable valve timing control	Fuel injection control	Fuel pump control	Electronic spark advance (ESA) control	Purge control	EGR control	Front HO2S heater control	Rear HO2S heater control	A/C cut-off control	Electrical fan control	Generator control	Traction control	Immobilizer system
IAC valve	×																
VAD control solenoid valve		×															
VIC solenoid valve			×														
VTCS solenoid valve				×													
Oil control valve (OCV)					×												
Fuel injectors						×											×
Fuel pump relay							×										
Ignition coil								×									×
Purge solenoid valve									×								
EGR valve										×							
HO2S heaters											×	×					
A/C relay													×				
Cooling fan relay														×			
Generator (terminal D: field coil)															×		
ABS/TCS HU/CM																×	

F

CAMSHAFT POSITION (CMP) SENSOR

A6E394018881T05

Outline

- For cylinder identification, the CMP sensor detects a camshaft angle of **30 degree** after the top dead center in cylinder No. 1.
- The wave form of CMP sensor output is shown in the figure.

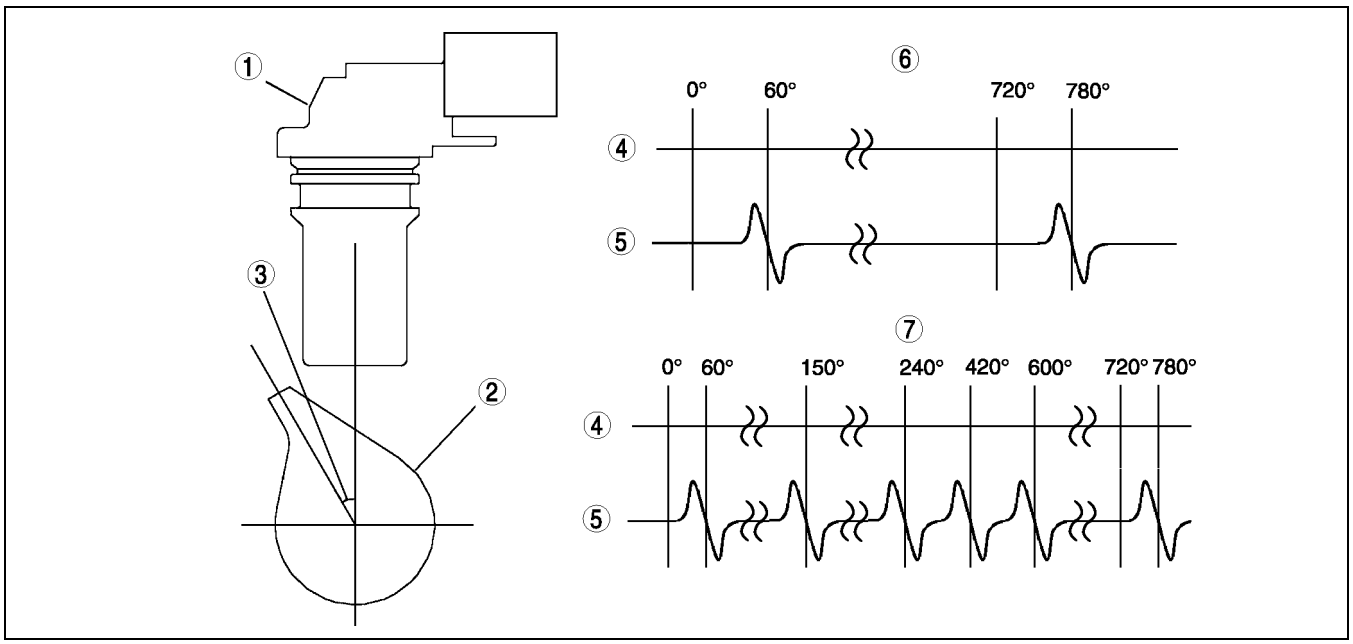

A6E3940T021

1	CMP sensor
2	Camshaft for inlet valve
3	Camshaft angle **30 degree**
4	Crankshaft angle

5	CMP sensor output signal
6	LF and L8 engine model
7	L3 engine model

CRANKSHAFT POSITION (CKP) SENSOR

A6E394018881T06

Outline

- For detecting the crankshaft angle, the CKP sensor detects pulsation signals from pulse wheel.
- The wave form of CKP sensor output is shown in the figure.

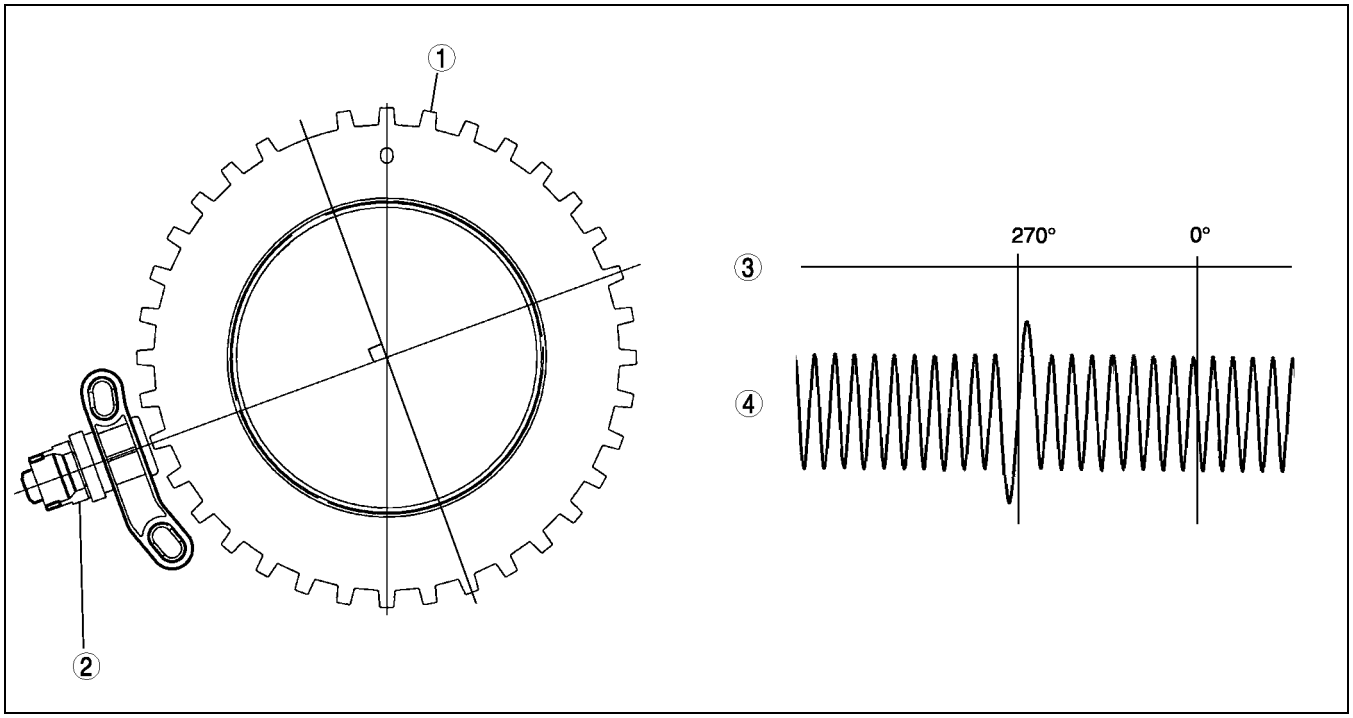

A6E3940T022

1	Pulse wheel
2	CKP sensor

3	Crankshaft angle
4	CKP sensor output signal

IDLE AIR CONTROL (IAC)

A6E394018881T07

Outline

- The IAC of the Mazda6 (GG) is essentially carried over from the current MPV (LW) FS engine models except for the followings.
  - — Add the MAP factor to the feedback correction
  - — Target engine speed is different caused to match the vehicle characteristics.

Target Engine Speed

Condition	Idle speed (rpm)			
	L8	LF MTX	LF ATX	L3
No load	700	650	700	650
Electrical load is on.*1	700	700	700	700
P/S is operating.	750	700	700	700
A/C is operating.*2 (Middle pressure switch OFF or Not equipped)	750	750	700	750
A/C is operating.*2 (Middle pressure switch ON if equipped)	750	750	750	750

*1 : Headlight is on, fan switch is above 1st, cooling fan is operating, and rear window defroster is on.

*2 : A/C switch and fan switch are on.

VARIABLE AIR DUCT (VAD) CONTROL

A6E394018881T08

Outline

- The VAD control system opens the VAD shutter valve in the air cleaner only at high engine speeds so that engine performance does not decrease at high engine speeds due to insufficient mass airflow amount.

Operation

- The PCM turns the VAD control solenoid valve ON to open the VAD shutter valve when all of the following conditions have been met.
  - — ECT: **above 70 °C [158 °F]**
  - — Engine speed: **above 5,800 rpm**
  - — TP angle: **above 50%**

VARIABLE INTAKE-AIR SYSTEM

A6E394018881T09

Outline

- The VIS system of the Mazda6 (GG) is essentially carried over from the VICS of the current MPV (LW) FS engine models except for operation conditions.

Operation Conditions

- The PCM energized/de-energized the VIS solenoid valve at the engine speed of **approx 4,400 rpm**.

VARIABLE TUMBLE CONTROL SYSTEM (VTCS)

A6E394018881T10

Outline

- The VTCS actuates the VTCS shutter valve in the intake manifold to increase the intake air flowing speed and create the tumbling air in the combustion chamber for better injected fuel atomization, thus reduces the HC and CO exhaust emissions at light load.

Operation Conditions
- The PCM turns the VTCS solenoid valve ON to close the VTCS shutter valve in the intake manifold when all of the following conditions are met:
  — Engine speed: **below 3,750 rpm**
  — Throttle opening angle is below as followings:
  Below 1,500 rpm: CTP
  Between 2,000 rpm and 3,000 rpm: **26—29%**
  Above 2,500 rpm: WOT
  — ECT **below 63 °C [145 °F]**
- The PCM turns the VTCS solenoid valve OFF for maintaining the startability and stability during the engine cranking and for **0.2 second** after engine started.

VARIABLE VALVE TIMING CONTROL

A6E394018881T11

Outline
- The variable valve timing control of the Mazda6 (GG) is essentially carried over from the current MX-5 (NB) except execution condition for the cleaning mode and maximum cam retard mode to match the vehicle characteristics.

Execution condition
Cleaning mode
- When all of the following conditions are met.
  — Decrease the engine speed with CTP
  — Engine speed: **between 2,250 rpm and 3,500 rpm**
  — ECT: **above 80 °C [176 °F]**

Maximum cam retard mode
- When any of the following conditions are met.
  — Cranking
  — Engine speed: **below 970 rpm**
  — ECT: **below 18 °C [64 °F]**
  — Target valve timing: **0**
  — Torque reduction is activating by TCS

FUEL INJECTION CONTROL

A6E394018881T12

Outline
- There are two types of injection timing control: “synchronized injection” and “non-synchronized injection.”
- BARO and rear oxygen sensor feedback correction has been added.

Injection Timing
Synchronized injection
- PCM determines fuel injection timing and amount synchronized with the crank angle, and based on the following signals during the intake/exhaust stroke of each cylinder.
  — CKP, MAF, ECT, IAT

Non-synchronized injection
- PCM determines fuel injection timing and amount based on the following signals (not synchronized with the crankangle).
  — TP, MAF, ECT, IAT

Correction
BARO correction
- Purpose: to maintain the engine stability
- Conditions: at all time
- Action: lower BARO, larger correction

Rear HO2S feedback correction
- Purpose: to control air/fuel ratio close to increase the performance of the catalytic converter
- Conditions: at feedback zone
- Action: Rear HO2S output voltage

A/C CUT-OFF CONTROL

A6E394018881T13

Outline
- The A/C cut-off control of the Mazda6 (GG) is essentially carried over from the current MPV (LW) FS engine model except for operation condition.

Operation Conditions

- While A/C is operating, the PCM cuts off the power supply to the A/C relay as shown below.

A/C cut-off condition	A/C cut-off time	Purpose
During cranking	For approx. 4.0 s	Startability improvement
Throttle valve is open more than 50%	For approx. 5.0 s	Acceleration performance improvement
ECT is above 113 °C {235 °F}	Alternates between on and off for 10 seconds until ECT falls to 107 °C {225 °F}	Engine reliability improvement
ECT is above 118 °C {244 °F}	Until engine ECT falls below 113 °C {235 °F}	

ELECTRIC FAN CONTROL

A6E394018881T14

Operation

L8, LF (Intensely hot area) and L3 engine models

ON: Energized
OFF: De-energized

Condition		PCM terminal 4L	PCM terminal 4B	PCM terminal 4F	Operation condition
Cooling fan motor No. 1	Cooling fan motor No. 2				
Stopped	Stopped	OFF	OFF	OFF	A/C: OFF ECT: below 100 °C [176 °F]
Low speed	Low speed	ON	ON	OFF	A/C: OFF ECT: 100—108 °C [212—226 °F]
High speed	High speed	ON	ON	ON	A/C: OFF ECT: above 108 °C [226 °F]
Low speed	Low speed	ON	ON	OFF	A/C: ON (middle switch OFF) ECT: below 108 °C [226 °F]
High speed	Middle speed	ON	OFF	ON	A/C: ON (middle switch ON) ECT: below 108 °C [226 °F]
High speed	High speed	ON	ON	ON	A/C: ON ECT: above 108 °C [226 °F]

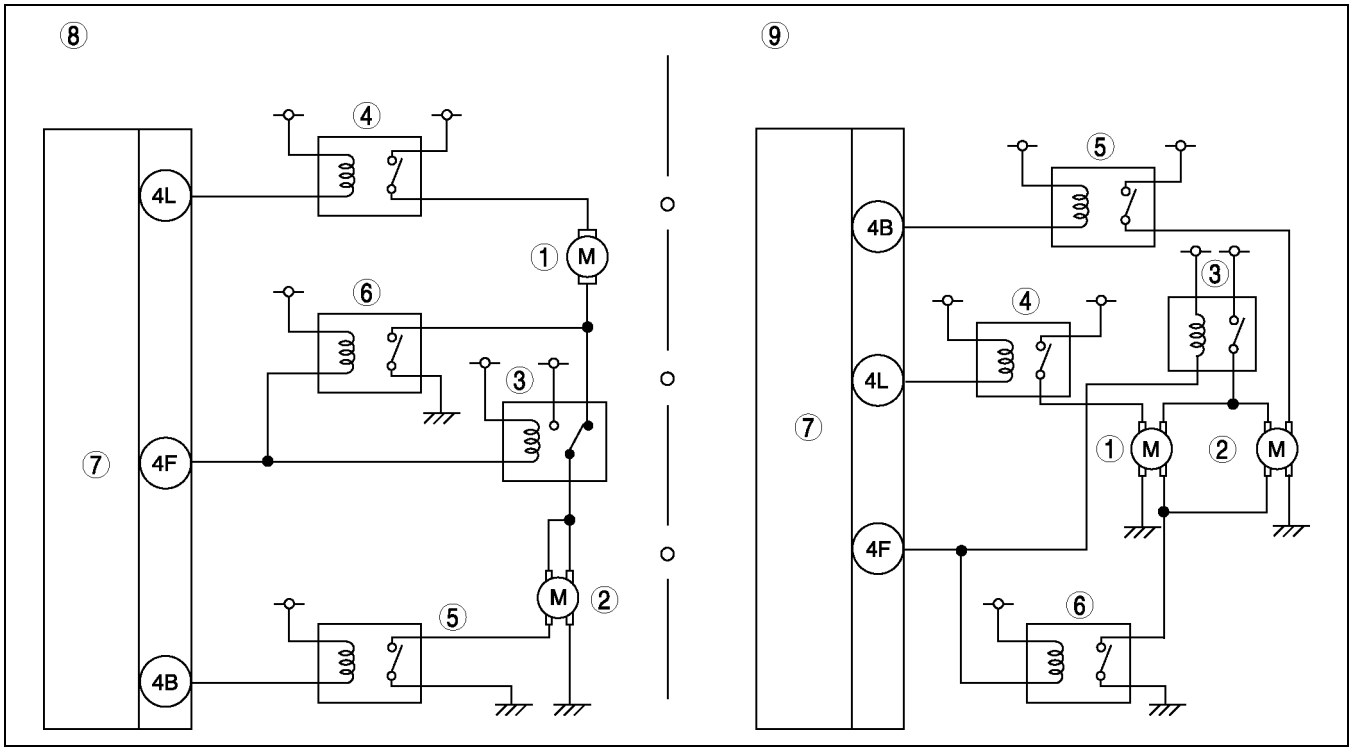

A6E3940T220

1	Cooling fan motor No. 1
2	Cooling fan motor No. 2
3	Cooling fan relay No. 1
4	Cooling fan relay No. 2
5	Cooling fan relay No. 3

6	Cooling fan relay No. 4
7	PCM
8	L3 engine models
9	LF, L8 engine models (Intensely hot area)

L8, LF (General area) engine models

1	Cooling fan motor No. 1
2	Cooling fan motor No. 2
3	Cooling fan relay No. 1
4	Cooling fan relay No. 2
5	PCM
6	With A/C system

- The PCM energized the cooling fan relay No. 1 and No. 2 (with A/C system) except all of following condition are met.
  — ECT: **below 100 °C [176 °F]**
  — A/C: OFF (with A/C system)

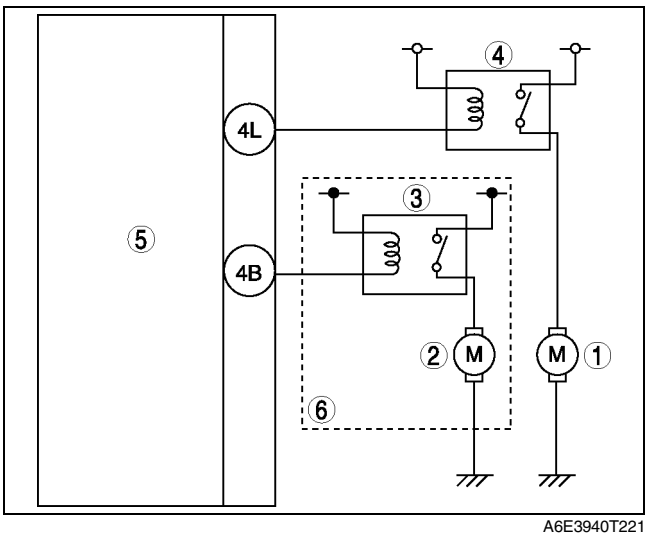

A6E3940T221

CONTROLLER AREA NETWORK (CAN)

A6E394018881T15

- PCM transmit/received the information in the CAN. For detail information of the CAN, see the “MULTIPLEX COMMUNICATION SYSTEM.” (See T–5 OUTLINE.)

Transmit Information
- Torque reduction inhibit
- Engine speed
- Vehicle Speed
- TP
- ECT
- Travelled distance
- Fuel injection amount
- MIL condition
- Generator warning light conditions
- Engine displacement
- Number of cylinders
- Air induction type
- Fuel type and delivery
- Country
- Transmission/axle type
- Tire circumference (front/rear)
- Desired gear/change lever position
- HOLD switch conditions

Received Information
- Wheel Speed from ABS HU/CM, ABS/TCS HU/CM, or DSC HU/CM
  - — Front Left
  - — Front right
  - — Rear left
  - — rear right
- Travelled distance from ABS HU/CM, ABS/TCS HU/CM, or DSC HU/CM
- Brake system status from ABS HU/CM, ABS/TCS HU/CM, or DSC HU/CM
- Torque reduction request from ABS/TCS HU/CM, or DSC HU/CM
- Brake system configuration from ABS HU/CM, ABS/TCS HU/CM, or DSC HU/CM

ON-BOARD DIAGNOSTIC

OUTLINE

A6E397018881T01

- The construction and operation of the on-board diagnostic system is essentially carried over from that of the current MPV (LW) GY/FS engine model, except for the following. (See MPV Workshop Manual supplement 1700-1*-00H.)
  - — DTCs, PID monitoring items, and simulation items have been changed to match the regulations. For the detail information of the regulations, refer to the “OBD Training Manual (3345-1E-00B).”
  - — KOEO/KOER self-test function has been adopted. Therefore, the present malfunction or a successful repair is readily confirmed.
  - — Pending code storage process has been changed as follows.
    1 drive cycle type
    - With the current MPV (LW) GY/FS engine model, pending codes are not available. With the new Mazda6 (GG), however, pending code is stored in the PCM during the drive cycle

    2 drive cycle type
    - With the current MPV (LW) GY/FS engine model, pending codes are deleted when a DTC is stored. With the new Mazda6 (GG), however, even if a DTC is stored, the PCM does not delete the pending code until a normal (malfunction repaired) condition judgement is made.
  - — The conditions by which the MIL for the second drive cycle type illuminates have been changed as follows.
    New Mazda6 (GG)
    - PCM determines that there is a malfunction in the first drive cycle when a DTC that has been stored in the PCM during previous drive cycles is detected.

    Current MPV (LW) GY/FS engine model
    - PCM determines that there is a malfunction in the second drive cycle.

CONTROL DEVICES AND MONITORING SYSTEM RELATIONSHIP CHART

A6E397018881T02

Monitoring System

×: Applicable

Component	Monitor item				
	Catalyst	Misfire	Fuel system	Oxygen sensor	Oxygen sensor heater
Input					
CKP sensor	×	×	×	×	×
CMP sensor	×	×	×	×	×
VSS		×	×	×	
MAF sensor	×	×	×	×	×
ECT sensor	×	×	×	×	×
IAT sensor	×	×	×	×	
TP sensor	×	×	×	×	
Rear HO2S	×			×	×
Front HO2S	×		×	×	×
Output					
DLC-2	×	×	×	×	×
MIL	×	×	×	×	×
Purge solenoid valve			×	×	
Fuel injectors			×		

DIAGNOSTIC TEST MODE

A6E397018881T03

- To match the OBD regulations, the following diagnostic test modes have been supported.

Diagnostic test mode	Item
Mode 01	Sending diagnostic data (PID data monitor/On-board system readiness test)
Mode 02	Sending freeze frame data
Mode 03	Sending emission-related malfunction code (Diagnostic trouble code: DTC)
Mode 04	Clearing/resetting emission-related malfunction information
Mode 05	Sending oxygen sensor monitor test results
Mode 06	Sending intermittent monitoring system test results (Diagnostic monitoring test result: DMTR)
Mode 07	Sending continuous monitoring system test results (pending code)

- The diagnostic test modes are as shown below.

Sending Diagnostic Data (Mode 01)

PID data monitor

- The PID monitoring items are shown in the table.

PID data monitor table

Full names	Condition/unit	
Diagnostic trouble code counter	–	
Malfunction indicator	ON/OFF	
Fuel system loop status	Refer to table below.	
Engine load calculated value	%	
Engine coolant temperature	°C	°F
Short fuel trim	%	
Long fuel trim	%	
Intake manifold absolute pressure	%	kPa
Engine speed	rpm	
Vehicle speed	km/h	mph
Spark advance	BTDC	
Intake air temperature	°C	°F
Mass air flow	g/s	
Throttle position	%	
Oxygen sensor location	–	
Front heated oxygen sensor	V	
Rear heated oxygen sensor	V	
OBD requirement to which vehicle designed	–	
Distance travelled while MI is activated	km	miles

Meaning of FUEL SYS1

Display	Meaning
-NA-	Not applicable
OPEN	Feedback stops: Engine coolant temperature is lower than the determined feedback zone.
CLOSE	Feedback operating: HO2S being used for feedback is okay.
OP DRV	Feedback stops: Open loop due to driving condition.
OP SYS	Feedback stops: Open loop due to detected system fault.
CL O2S	Feedback operating: Malfunction occurred in HO2S (rear) system.

On-board system readiness test

- The items supported by the on-board system readiness test are shown below.

Continuous monitoring system

— Misfire monitoring
— Fuel system monitoring
— Comprehensive component monitoring (CCM)

Intermittent monitoring system

— Catalyst monitoring
— O2S monitoring
— O2S heater monitoring

Sending Freeze Frame Data (FFD) (Mode 02)

- The FFDs are shown in the table.

FFD monitor table

Full names	Condition/unit	
DTC that caused required FFD storage	–	
Fuel system loop status	OPEN: NON-F/B, CLOSE: F/B	
Engine load calculated value	%	
Engine coolant temperature	°C	°F
Short fuel trim	%	
Long fuel trim	%	
Intake manifold absolute pressure	%	kPa
Engine speed	rpm	
Vehicle speed	km/h	mph
Spark advance	BTDC	
Intake air temperature	°C	°F
Mass air flow	g/s	
Throttle position	%	

Sending Emission-related Malfunction code (DTC) (Mode 03)

- The DTCs are shown in the table.

DTC table

×: Applicable
—: Not applicable

DTC No.	Condition	MIL	DC	Monitor item	Memory function
P0010	CMP actuator circuit malfunction	ON	1	CCM	×
P0011	CMP timing over-advanced	ON	1	CCM	×
P0012	CMP timing over-retarded	ON	1	CCM	×
P0031	Front HO2S heater circuit low input	ON	2	O_2 sensor heater	×
P0032	Front HO2S heater circuit high input	ON	2	O_2 sensor heater	×
P0037	Rear HO2S heater circuit low input	ON	2	O_2 sensor heater	×
P0038	Rear HO2S heater circuit high input	ON	2	O_2 sensor heater	×
P0101	MAF sensor inconsistent with TP sensor	ON	2	CCM	×
P0102	MAF circuit low input	ON	1	CCM	×
P0103	MAF circuit high input	ON	1	CCM	×
P0107	MAP sensor circuit low input	ON	1	CCM	×
P0108	MAP sensor circuit high input	ON	1	CCM	×
P0111	IAT circuit performance problem	ON	2	CCM	×
P0112	IAT circuit low input	ON	1	CCM	×
P0113	IAT circuit high input	ON	1	CCM	×
P0117	ECT circuit low input	ON	1	CCM	×
P0118	ECT circuit high input	ON	1	CCM	×
P0121	TP stuck closed	ON	2	CCM	×
P0122	TP circuit low input	ON	1	CCM	×
P0123	TP circuit high input	ON	1	CCM	×
P0125	Excessive time to enter closed loop fuel control	ON	2	CCM	×
P0131	Front HO2S no inversion (stuck low)	ON	2	CCM	×
P0132	Front HO2S no inversion (stuck high)	ON	2	CCM	×
P0133	Front HO2S circuit malfunction	ON	2	O_2 sensor	×
P0134	Front HO2S circuit no activity detected	ON	2	CCM	×
P0138	Rear HO2S circuit high input	ON	2	CCM	×
P0140	Rear HO2S circuit no activity detected	ON	2	CCM	×
P0171	Fuel trim system too lean	ON	2	Fuel	×
P0172	Fuel trim system too rich	ON	2	Fuel	×
P0300	Random misfire detected	Flash / ON	1 or 2	Misfire	×
P0301	Cylinder No.1 misfire detected	Flash / ON	1 or 2	Misfire	×
P0302	Cylinder No.2 misfire detected	Flash / ON	1 or 2	Misfire	×

DTC No.	Condition	MIL	DC	Monitor item	Memory function
P0303	Cylinder No.3 misfire detected	Flash / ON	1 or 2	Misfire	×
P0304	Cylinder No.4 misfire detected	Flash / ON	1 or 2	Misfire	×
P0327	Knock sensor circuit low input	ON	1	CCM	×
P0328	Knock sensor circuit high input	ON	1	CCM	×
P0335	CKP sensor circuit malfunction	ON	1	CCM	×
P0340	CMP sensor circuit malfunction	ON	1	CCM	×
P0403	EGR valve motor coils open or short	ON	2	CCM	×
P0420	Catalyst system efficiency below threshold	ON	2	Catalyst	×
P0443	Evaporative emission control system purge control valve circuit malfunction	ON	2	CCM	×
P0480	Fan relay control circuit malfunction	OFF	2	Other	×
P0500	Vehicle speed sensor (VSS) circuit malfunction	ON	2	CCM	×
P0505	Idle control system malfunction	OFF	—	Other	—
P0506	Idle control system RPM lower than expected	ON	2	CCM	×
P0507	Idle control system RPM higher than expected	ON	2	CCM	×
P0511	Idle control system circuit malfunction	ON	1	CCM	×
P0550	PSP switch circuit malfunction	ON	2	CCM	×
P0602	PCM programming error	ON	1	CCM	×
P0610	Control module vehicle options error	ON	1	CCM	×
P0661	VIS control circuit low input	OFF	2	Other	×
P0662	VIS control circuit high input	OFF	2	Other	×
P0703	Brake switch input malfunction	ON	2	CCM	×
P0704	Clutch switch input malfunction	ON	2	CCM	×
P0850	Neutral switch input malfunction	ON	2	CCM	×
P1410	Variable air duct valve circuit malfunction	OFF	2	Other	×
P1562	PCM +BB voltage low	ON	1	CCM	×
P2006	Variable tumble control system shutter valve stuck closed	ON	2	CCM	×
P2009	Variable tumble control solenoid valve circuit low input	ON	2	CCM	×
P2010	Variable tumble control solenoid valve circuit high input	ON	2	CCM	×
P2228	BARO sensor circuit low input	ON	1	CCM	×
P2229	BARO sensor circuit high input	ON	1	CCM	×
P2502	Generator output voltage signal no electricity	OFF	1	Other	—
P2503	Battery overcharge	OFF	1	Other	—
P2504	Generator terminal B circuit open	OFF	1	Other	—
U0073	CAN bus off	OFF	1	Other	—
U0121	PCM cannot receive any signals from ABS, ABS/TCS or DSC HU/CM	ON	1	Other	×
U0155	PCM cannot receive any signals from instrument cluster	ON	1	Other	×

Sending Intermittent Monitoring System Test Results (Mode 06)

- The items supported by the sending intermittent monitoring system are shown in the table.

TEST ID	Description	Related system
10:01:0A	Rich to lean sensor threshold voltage	HO2S
10:02:0A	Lean to rich sensor threshold voltage	
10:03:0A	Low sensor voltage for switching time calculation	
10:04:0A	High sensor voltage for switching time calculation	
10:05:10	Rich to lean sensor switching time	
10:06:10	Lean to rich sensor switching time	
10:0A:10	Sensor period	
10:80:20	Front and rear HO2S switching time ratio	TWC

Sending Continuous Monitoring System Test Results (pending code) (Mode 07)

- These appear when a problem is detected in a monitored system.

1 drive cycle type

- If any problems are detected in the first drive cycle, pending codes will be stored in the PCM memory, as well as DTCs.
- After pending codes are stored, if the PCM judges that the system is normal in any future drive cycle, the PCM deletes the pending codes.

2 drive cycle type

- The code for a failed system is stored in the PCM memory in the first drive cycle. If the problem is not found in the second drive cycle, the PCM judges that the system returned to normal or the problem was mistakenly detected, and deletes the pending code. If the problem is found in the second drive cycle too, the PCM judges that the system has failed, and stores the pending codes, and the DTCs.
- After pending codes are stored, if the PCM judges that the system is normal in any future drive cycle, the PCM deletes the pending codes.

DTC

A6E397018881T04

- Detection logics and conditions are as shown below.

CMP Timing

CMP actuator circuit malfunction (P0010)

- PCM monitors OCV voltage. If PCM detects OCV control voltage (calculated from OCV) is above or below the threshold voltage (calculated from battery positive voltage), PCM determines that OCV circuit has a malfunction.

CMP timing over-advanced (P0011)

- Actual valve timing is over-advanced by **30 deg.** from target valve timing when the OCV is controlled within the maximum valve timing retard condition.

CMP timing over-retarded (P0012)

- Actual valve timing is over-retarded by **5 deg.** from target valve timing for **5 s** when the OCV system control is within feed-back range.

Oxygen Sensor Heater

Front HO2S heater circuit low input (P0031)

- The PCM monitors the front HO2S heater control signal at the PCM terminal 4A. If the PCM turns the front HO2S heater off but front HO2S heater circuit has low voltage, the PCM determines that the front HO2S heater circuit has a malfunction.

Front HO2S heater circuit high input (P0032)

- The PCM monitors the front HO2S heater control signal at the PCM terminal 4A. If the PCM turns the front HO2S heater on but front HO2S heater circuit has high voltage, the PCM determines that the front HO2S heater circuit has a malfunction.

Rear HO2S heater circuit low (P0037)

- The PCM monitors the rear HO2S heater control signal at the PCM terminal 4D. If the PCM turns the rear HO2S heater off but rear HO2S heater circuit has low voltage, the PCM determines that the rear HO2S heater circuit has a malfunction.

Rear HO2S heater circuit high (P0038)
- The PCM monitors the rear HO2S heater control signal at the PCM terminal 4D. If the PCM turns the rear HO2S heater on but rear HO2S heater circuit has high voltage, the PCM determines that the rear HO2S heater circuit has a malfunction.

MAF Sensor
MAF sensor inconsistent with TP sensor (P0101)
- The PCM compares actual input signal from MAF sensor with expected input signal from MAF sensor (calculated by input voltage from throttle position sensor or engine speed).
  - — If mass intake air flow amount is **below 5.0 g/sec. {0.66 lb/min.}** for **5 s** and throttle opening angle is **above 50 %** with engine running, the PCM determines that detected mass intake air flow amount is too low.
  - — If mass intake air flow amount is **above 96.5 g/sec. {12.7 lb/min.}** for **5 s** and engine speed is **below 2,000 rpm** with engine running, the PCM determines that detected mass intake air flow amount is too high.

MAF sensor circuit high input (P0102)
- The PCM monitors input voltage from MAF sensor when engine running. If input voltage at the PCM terminal 1P is **below 0.21 V**, the PCM determines that MAF circuit has a malfunction.

MAF sensor circuit high input (P0103)
- The PCM monitors input voltage from MAF sensor when engine running. If input voltage at the PCM terminal 1P is **above 4.9 V**, the PCM determines that MAF circuit has a malfunction.

MAP Sensor
MAP sensor circuit low input (P0107)
- The PCM monitors input voltage from MAP sensor when intake air temperature is **above 10 °C {50 °F}**. If input voltage at the PCM terminal 1J is **below 0.1 V**, the PCM determines that MAP sensor circuit has a malfunction.

MAP sensor circuit high input (P0108)
- The PCM monitors input voltage from MAP sensor when intake air temperature is **above 10 °C {50 °F}**. If input voltage at the PCM terminal 1J is **above 4.9 V**, the PCM determines that MAP sensor circuit has a malfunction.

Intake Air Temperature (IAT) Sensor
IAT sensor circuit performance problem (P0111)
- If intake air temperature is higher than engine coolant temperature by **40 °C {104 °F}** with ignition key on, the PCM determines that there is a IAT sensor performance problem.

IAT sensor circuit low input (P0112)
- The PCM monitors input voltage from IAT sensor. If input voltage at the PCM terminal 2E is **below 0.2 V**, the PCM determines that IAT sensor circuit has a malfunction.

IAT sensor circuit high input (P0113)
- The PCM monitors input voltage from IAT sensor. If input voltage at the PCM terminal 2E is **above 4.8 V**, the PCM determines that IAT sensor circuit has a malfunction.

Engine Coolant Temperature (ECT) Sensor
ECT circuit low input (P0117)
- The PCM monitors ECT sensor signal at the PCM terminal 1M. If the PCM detects ECT sensor voltage **below 0.2 V**, the PCM determines that the ECT sensor circuit has a malfunction.

ECT circuit high input (P0118)
- The PCM monitors ECT sensor signal at the PCM terminal 1M. If the PCM detects ECT sensor voltage **above 4.6 V**, the PCM determines that the ECT sensor circuit has a malfunction.

Excessive time to enter closed loop fuel control (P0125)
- The PCM monitors ECT sensor signal at the PCM terminal 1M after engine is started while the engine is cold. If engine coolant temperature does not reach the expected temperature for specified period, the PCM determines that it has taken an excessive amount of time for the engine coolant temperature to reach the temperature necessary to start closed-loop fuel control.

Throttle Position (TP) Sensor
Throttle position stuck closed (lower than expected)/open (higher than expected) (P0121)
- If the PCM detects that throttle valve opening angle is **below 12.5%** for **5 s** after following conditions are met, the PCM determines that TP is stuck closed:
  — Engine coolant temperature **above 80 °C {176 °F}**
  — MAF sensor signal **above 32.0 g/s {4.2 lb/minutes}**
- If the PCM detects that throttle valve opening angle is **above 50%** for **5 seconds** after following conditions are met, the PCM determines that TP is stuck open:
  — Engine speed **above 500 rpm**
  — MAF sensor signal **0 g/s {0.7 lb/min.}**

TP circuit low input (P0122)
- If the PCM detects TP sensor voltage at the PCM terminal 2A is **below 0.1 V** after ignition key is turned to on, the PCM determines that TP circuit has a malfunction.

TP circuit high input (P0123)
- If the PCM detects TP sensor voltage at the PCM terminal 2A is **above 4.9 V** after ignition key is turned to on, the PCM determines that TP circuit has a malfunction.

Front Heated Oxygen Sensor (HO2S)
Front HO2S stuck low (P0131)
- The PCM monitors input voltage from the front HO2S when the following conditions are met. If input voltage from the sensor remains **below 0.45 V** for **41.2 s**, the PCM determines that there is no front HO2S inversion.
  — Engine speed is **above 1,500 rpm**.
  — Engine coolant temperature is **above 80 °C {176°F}**.

Front HO2S stuck high (P0132)
- The PCM monitors input voltage from the front HO2S when the following conditions are met. If input voltage from the sensor remains **above 0.45 V** for **41.2 s**, the PCM determines that there is no front HO2S inversion.
  — Engine speed is **above 1,500 rpm**.
  — Engine coolant temperature is **above 80 °C {178 °F}**.

Front HO2S circuit malfunction (P0133)
- The PCM monitors inversion cycle period, lean-to-rich response time and rich-to-lean response time of the sensor. The PCM calculates the average of the inversion cycle period-specified inversion cycles, average response time from lean-to-rich, and from rich-to-lean when following conditions are met. If any exceeds threshold, the PCM determines that circuit has a malfunction.
  — Drive mode 3
  — Following conditions are met:
    - Calculation load **14.8—59.4%** (at **2,000 rpm**.)
    - Engine speed **1,410—4,000 rpm** (MTX)
    - Engine speed **1,190—4,000 rpm** (ATX)
    - Vehicle speed is above **3.76 km/h**
    - Engine coolant temperature is **above -10 °C {14 °F}**
    - Front HO2S signal inversion cycle is **above 10 cycles**

Front HO2S circuit no activity detected (P0134)
- The PCM monitors input voltage from the front HO2S when the following conditions are met. If input voltage from sensor never **exceed 0.55 V** for **83.2 s**, the PCM determines that sensor circuit is not activated.
  — Engine speed is **above 1,500 rpm**.
  — Engine coolant temperature is **above 80 °C {176 °F}**.

Rear Heated Oxygen Sensor (HO2S)
Rear HO2S circuit high input (P0138)
- The PCM monitors input voltage from the rear HO2S. If input voltage from the rear HO2S sensor is **above 0.45 V** for **6.4 s** during deceleration fuel cut, the PCM determines that the circuit input is high.

Rear HO2S circuit no activity detected (P0140)
- The PCM monitors input voltage from the rear HO2S when the following conditions are met. If input voltage from sensor never **exceed 0.55 V** for **30.4 s**, the PCM determines that sensor circuit is not activated.
  — Engine speed is **above 1,500 rpm**.
  — Engine coolant temperature is **above 80 °C {176 °F}**.

Fuel System
Fuel trim system too lean (P0171)
- The PCM monitors short term fuel trim (SHRTFT) and long term fuel trim (LONGFT) values during closed loop fuel control. If fuel trim exceeds preprogrammed criteria, the PCM determines that the fuel system is too lean.

Fuel trim system too rich (P0172)
- The PCM monitors short fuel trim (SHRTFT) and long fuel trim (LONGFT) values during closed loop fuel control. If fuel trim exceeds preprogrammed criteria, the PCM determines that the fuel system is too rich.

Misfire Monitor
Random misfire detection (P0300), Cylinder misfire detection (P0301, P0302, P0303, P0304)
- The PCM monitors CKP sensor input signal interval time. The PCM calculates the change of the interval time for each cylinder. If the change of interval time exceeds the preprogrammed criteria, the PCM detects a misfire in the corresponding cylinder. While the engine is running, the PCM counts the number of misfires that occurred at **200 crankshaft revolutions** and **1,000 crankshaft revolutions** and calculates misfire ratio for each crankshaft revolution. If the ratio exceeds the preprogrammed criteria, the PCM determines that a misfire, which can damage the catalytic converter or affect emission performance, has occurred.

Knock Sensor
Knock sensor circuit low input (P0327)
- The PCM monitors input signal from the knock sensor when the engine is running. If input voltage between PCM terminals between 2P and 2S is **below 0.9 V**, the PCM determines that knock sensor circuit has a malfunction.

Knock sensor circuit high input (P0328)
- The PCM monitors input signal from the knock sensor when the engine is running. If input voltage between PCM terminals 2P and 2S is **above 4.9 V**, the PCM determines that knock sensor circuit has a malfunction.

Crankshaft Position (CKP) Sensor
CKP sensor circuit malfunction (P0335)
- If the PCM does not receive input voltage from the CKP sensor for **4.2 s** while MAF is **2.0 g/s {0.26 lb/min.} or above**, the PCM determines that the CKP sensor circuit has a malfunction.

Camshaft Position (CMP) Sensor
CMP sensor circuit malfunction (P0340)
- The PCM monitors voltage from the CMP sensor when the engine is running. If the PCM does not receive input voltage from the CMP sensor while the PCM receives input signal from the CKP sensor, the PCM determines that CMP circuit has a malfunction.

EGR Valve
EGR valve (stepper motor) circuit malfunction (P0403)
- The PCM monitors input voltage from EGR valve. If voltage at PCM terminals 4E, 4H, 4K and/or 4N remains low or high, the PCM determines that EGR valve circuit has a malfunction.

Catalyst System
Catalyst system efficiency below threshold (P0420)
- The PCM compares the number of front HO2S and rear HO2S inversions for a predetermined time. The PCM monitors the number of inversions the rear side performs while the front side inverts for a specified number of times when the following monitoring conditions are met. The PCM detects the inversion ratio. If inversion ratio is below threshold, the PCM determines that the catalyst system has deteriorated.
  - — Engine speed **1,410—3,000 rpm** (MTX)
  - — Engine speed **1,281—3,000 rpm** (ATX)
  - — Calculated load **15—50%**(*1)

  *1: Maximum calculated load value varies depending on engine speed

Purge Solenoid Valve
Evaporative emission control system purge control valve circuit malfunction (P0443)
- The PCM monitors input voltages from the purge solenoid valve. If voltage at the PCM terminal 4U remains low or high, the PCM determines that the purge solenoid valve circuit has a malfunction.

Fan Control System
Fan control circuit malfunction (P0480)
- The PCM monitors input voltages from the fan control module. If voltage at the PCM terminal 1U remains low or high, the PCM determines that the fan control circuit has a malfunction.

Vehicle Speed Sensor (VSS)
VSS circuit malfunction (P0500) (MTX vehicles without ABS)
- Vehicle speed signal does not input after the following conditions are met:
  — Gear is in other than neutral position
  — Load is above **40%**
  — Engine speed is **2,000 rpm or above**

Idle Air Control (IAC) Valve
IAC system malfunction (P0505)
- The PCM monitors idle speed. If idle speed is **1,800 rpm or below** for **3 s** during KOER self test, the PCM determines that the IAC system has a malfunction.

IAC system RPM lower than expected (P0506)
- Actual idle speed is lower than expected by **100 rpm** for **14 s**, when brake pedal is depressed (brake switch is on) and steering wheel is held straight ahead (power steering pressure switch is off).

IAC system RPM higher than expected (P0507)
- Actual idle speed is higher than expected by **200 rpm** for **14 s**, when brake pedal is depressed (brake switch is on) and steering wheel is held straight ahead (power steering pressure switch is off).

IAC valve circuit malfunction (P0511)
- If the PCM detects that the PCM terminal 4G voltage is above or below threshold when IAC control duty target is **within16—70%**, the PCM determines that the IAC valve circuit has a malfunction.

Power Steering Pressure (PSP) Switch
PSP switch circuit malfunction (P0550)
- The PCM monitors PSP switch signal at the PCM terminal 1Z. If input voltage is low (switch stays on) for **1 minute** when the VSS is **above 60 km/h {37.3 mph}** and ECT is **above 60 °C {140 °F}**, the PCM determines that the PSP switch circuit has a malfunction.

PCM Configuration
PCM programming error (P0602)
- No configuration data in PCM.

Note
- If “PCM CONFIGURATION” is successful, the PCM stored DTC P0602 and illuminates the MIL (System i s normal) Clear the DTC P0602 using WDS or equivalent after “PCM CONFIGURATION”.
- MIL goes off after three drive cycles with no failure (DTCs remain in PCM).

Control module vehicle options error (P0610)
- PCM data configuration error.

Variable Intake-air System (VIS) Control Solenoid Valve
VIS control solenoid valve circuit low input (P0661)
- The PCM monitors VIS control solenoid valve control signal at the PCM terminal 4R. If the PCM turns the VIS control solenoid valve off but voltage at the PCM terminal 4R still remains low, the PCM determines that VIS control solenoid valve circuit has a malfunction.

VIS control solenoid valve circuit high input (P0662)
- The PCM monitors VIS control solenoid valve control signal at the PCM terminal 4R. If the PCM turns the VIS control solenoid valve on but voltage at the PCM terminal 4R still remains high, the PCM determines that VIS control solenoid valve circuit has a malfunction.

Brake Switch
Brake switch input malfunction (P0703)
- The PCM monitors changes in input voltage from the brake switch. If the PCM does not detect the PCM terminal 1K voltage changes while alternately accelerating and decelerating **8 times**.

Clutch Switch
Clutch switch input malfunction (P0704)
- The PCM monitors changes in input voltage from the clutch switch. If the PCM does not detect the PCM terminal 1R voltage changes while running vehicle with vehicle speed **above 0 km/h {0 mph}** and **below 30 km/h {19 mph} 8 times** alternately, PCM determines that clutch switch circuit has a malfunction.

Neutral Switch
Neutral switch input malfunction (P0850)
- The PCM monitors changes in input voltage from the neutral switch. If the PCM does not detect the PCM terminal 1W voltage changes while running vehicle with vehicle speed **above 30 km/h {19 mph}** and the clutch pedal is depressed and released **10 times** repeatedly, PCM determines that neutral switch circuit has a malfunction.

Variable Air Duct (VAD) Solenoid Valve
VAD control system circuit malfunction (P1410)
- The PCM monitors the VAD solenoid control signal at PCM terminal 4C. If the PCM detects that the VAD solenoid control signal does not change when VAD solenoid valve is switched to ON or OFF, the PCM determines that VAD solenoid control circuit has a malfunction.

F

PCM
PCM +BB (back-up battery) voltage low (P1562)
- The PCM monitors back up battery positive voltage at the PCM terminal 2Z. If the PCM detects battery positive terminal voltage **below 2.5V** for **2 s**, the PCM determines that the backup voltage circuit has malfunction.

Variable Tumble Control System
Variable tumble control system shutter valve stuck closed (P2006)
- The PCM monitors mass air amount. If actual air flow amount is below estimated air flow amount when the following monitoring conditions are met, the PCM determines that variable tumble control shutter valve has been stuck closed.
  - — Engine speed is **above 3,750 rpm**
  - — Engine coolant temperature is **above 63 °C {145 °F}**
  - — Throttle valve opening angle is above threshold[*1]

  [*1]: Maximum calculated load value varies depending on engine speed

Variable tumble control solenoid valve circuit low input (P2009)
- The PCM monitors variable tumble control solenoid valve control signal at the PCM terminal 4T. If the PCM turns the variable tumble control solenoid valve off but voltage at the PCM terminal 4T still remains low, the PCM determines that variable tumble control solenoid valve circuit has a malfunction.

Variable tumble control solenoid valve circuit high input (P2010)
- The PCM monitors variable tumble control solenoid valve control signal at the PCM terminal 4T. If the PCM turns the variable tumble control solenoid valve on but voltage at the PCM terminal 4T still remains high, the PCM determines that variable tumble control solenoid valve circuit has a malfunction.

BARO Sensor
BARO sensor circuit low input (P2228)
- The PCM monitors input voltage from BARO sensor. If input voltage at the PCM terminal 1G is **below 0.35 V**, the PCM determines that BARO sensor circuit has a malfunction.

BARO sensor circuit high input (P2229)
- The PCM monitors input voltage from BARO sensor. If input voltage at the PCM terminal 1G is **above 4.92 V**, the PCM determines that BARO sensor circuit has a malfunction.

Generator
Generator terminal B circuit open (P2502)
- The PCM judges generator output voltage is **above 17 V** and battery positive voltage is **below 11 V**.

Generator output voltage signal no electricity (P2503)
- The PCM needs **above 20 A** from the generator, and judges generator output voltage to be **below 8.5 V** during engine running.

Battery overcharge (P2504)
- The PCM judges generator output voltage is **above 18.5 V** or battery positive voltage is **above 16 V** during engine running.

Controller Area Network (CAN)
Can bus off (U0073)
- CAN controller is damaged.

PCM cannot receive any signals from ABS, ABS/TCS or DSC HU/CM control module (U0121)
- PCM cannot receive any signals from ABS, ABS/TCS or DSC HU/CM control module.

PCM cannot receive any signals from instrument cluster (U0155)
- PCM cannot receive any signals from the instrument cluster.

PID/DATA MONITOR AND RECORD

A6E397018881T05

- The PID/DATA monitoring items for the fuel and emission control systems are as shown in the table below.

Monitor item table

—: Not applicable

PID item	Definition	Unit/Condition	PCM terminal
ACCS	A/C relay	ON/OFF	4O
ACSW	A/C on demand circuit, including refrigerant pressure switch, A/C amplifier, A/C switch and fan switch	ON/OFF	1AC
ALTF	Generator field coil control duty valve in PCM	%	1AD
ALTT V	Generator output voltage	V	1AA
ARPMDES	Target engine speed	rpm	—
AST	After start timer	Time	—
BARO	Barometric pressure	Pressure	1G
	Barometric pressure signal voltage	V	1G
BOO	Brake switch	ON/OFF	1K
CHRGLP	Generator warning light control signal in PCM	ON/OFF	—
COLP	Refrigerant pressure switch (middle pressure)	ON/OFF	1Q
CPP	Clutch pedal position switch	ON/OFF	1R
CPP/PNP	Clutch pedal position switch/neutral switch circuit	ON/OFF	1W
DTCCNT	DTC Count (includes those needling no action)	—	—
ECT	Engine coolant temperature	°C or °F	1M
	Engine coolant temperature voltage	V	1M
EVAPCP	Purge solenoid valve duty value in PCM	%	4U
FAN1	Fan1 control signal	ON/OFF	4L
FAN2	Fan2 control signal	ON/OFF	4F
FAN3	Fan3 control signal	ON/OFF	4B
FDPDTC*1	Pending code that caused FFD storage	—	—
FP	Fuel pump relay control signal in PCM	ON/OFF	4P*2,4Q*3
FUELPW	Fuel injection duration in PCM	Time	4W,4Z,4AA,4AD
FUELSYS	Fuel system status (Open/Closed loop)	Open loop/ Closed loop	—
GENVDSD	Generator voltage desired	V	—
HTR11	Front HO2S heater control signal in PCM	ON/OFF	4A
HTR12	Rear HO2S heater control signal in PCM	ON/OFF	4D
IAC	IAC valve duty value in PCM	%	4G,4J
IASV	Intake air shutter valve	ON/OFF	4C
IAT	IAT	°C or °F	2E
	IAT signal voltage	V	2E
IMRC	Variable tumble control solenoid control signal in PCM	ON/OFF	4T
IMTV	Variable Intake-air system (VIS) control solenoid control signal in PCM	ON/OFF	4R
INGEAR	In gear	ON/OFF	1R,1W
IVS	Idle validation switch	ON/OFF	2A
KNOCKR	Spark retard value to prevent knocking	ANGLE	2P,2S
LOAD	Calculated engine load in PCM	%	—
LONGFT1	Current long fuel trim adjustment (Learning correction value) in PCM	%	—
MAF	Mass air flow amount	g/s	1P
	MAF signal voltage	V	1P
MAP	Manifold absolute pressure sensor	Pressure	1J
	Manifold absolute pressure signal voltage	V	1J
MIL	Malfunction indicator light control signal in PCM	ON/OFF	4I
MIL_DIS	Distance travelled since the MIL was illuminated	Distance	—
O2S11	Front HO2S signal voltage	V	1AB

PID item	Definition	Unit/Condition	PCM terminal
O2S12	Rear HO2S signal voltage	V	1Y
PSP	PSP switch	ON/OFF	1Z
RFCFLAG	Adaptive memory condition	—	—
RO2FT1	Rear O2 fuel trim	—	—
RPM	Engine speed	rpm	2D,2G
SEGRP	EGR valve (stepping motor) position in PCM	No. of step	4E,4H,4K,4N
SHRTFT1	Current short fuel trim adjustment in PCM	%	—
SPARKADV	Ignition timing control signal in PCM	BTC	2J,2M
TEST	—	ON/OFF	—
TP	TP	%	2A
	TP sensor signal voltage	V	2A
TPCT	Lowest closed throttle voltage	V	2A
VPWR	Battery positive voltage	V	2Y,2Z
VSS	Vehicle speed	KPH or MPH	2L
VT DUTY1	Camshaft position commanded duty cycle	%	4M
	Camshaft position commanded signal voltage	V	4M

*1 : Freeze frame data stored when pending code is detected

*2 : With immobilizer system

*3 : Without immobilizer system

SIMULATION TEST

A6E397018881T06

- The simulation test items for the fuel and emission control systems are as shown in the table below.

Simulation item table

×: Applied
—: Not applied

Simulation item	Applicable component	Operation	Test condition		PCM terminal
			IG ON	Idle	
ACCS	A/C relay	ON or OFF	×	×	4O
ALTF	Generator field coil control duty value	ON or OFF	—	×	1AD
ARPMDES	Desired RPM		×	×	—
EVAPCP	Purge solenoid valve	For purge solenoid valve: Actuated by any duty value (0—100%)	×	×	4U
FAN1	Fan1 control signal	ON or OFF	×	×	4L
FAN2	Fan2 control signal	ON or OFF	×	×	4F
FAN3	Fan3 control signal	ON or OFF	×	×	4B
FP	Fuel pump relay	ON or OFF	×	×	4P*1,4Q*2
FUELPW1	Fuel injection duration	Actuated +50%— -50% fuel injection time	—	×	4W,4Z, 4AA,4AD
GENVDSD	Generator voltage desired		—	×	—
HTR11	Front heated exhaust gas oxygen sensor heater	ON or OFF	×	×	4A
HTR12	Rear heated exhaust gas oxygen sensor heater	ON or OFF	×	×	4D
IAC	Idle air control	Actuated by any duty value (0—100%)	×	×	4G,4J
IMRC	Variable tumble control solenoid control signal in PCM	ON or OFF	×	×	4T
IMTV	Variable intake-air system (VIS) control solenoid control signal in PCM	ON or OFF	×	×	4R
INJ#1	Fuel injector (Cylinder No.1)	ON or OFF	—	×	4Z
INJ#2	Fuel injector (Cylinder No.2)	ON or OFF	—	×	4W
INJ#3	Fuel injector (Cylinder No.3)	ON or OFF	—	×	4AD
INJ#4	Fuel injector (Cylinder No.4)	ON or OFF	—	×	4AA
SEGRP	EGR valve (stepping motor)	Actuated by any stepping value (0—60 steps)	×	×	4E,4H, 4K,4N
TEST	—	ON or OFF	×	×	—

*1 : With immobilizer system
*2 : Without immobilizer system

KOEO/KOER SELF-TEST

A6E397018881T07

- The self-test function consists of the KOEO (Key On, Engine Off) self-test, performed when the ignition switch is at ON, and the KOER (Key On, Engine Running) self-test, performed when idling. If an abnormality is detected as either self-test is executed, a is displayed on the WDS or equivalent. Using the self-test function, the present malfunction or a successful repair is readily confirmed. Refer to the self-test function table for the corresponding DTCs.

  KOEO (Key ON, Engine Off) self-test

  — The KOEO self-test is a powertrain control system self-diagnosis, performed when the ignition switch is at ON and the engine is stopped. A KOEO self-test begins when the connected WDS or equivalent sends an execute command to the PCM.

  — As the KOEO self-test is performed, the PCM performs inspection for the set DTCs and if a malfunction is detected the DTC is displayed on the WDS or equivalent.

  KOER (Key ON, Engine Running) self-test

  — The KOER self-test is a powertrain control system self-diagnosis, performed when the ignition switch is at ON and the engine is idling. A KOER self-test begins when the connected WDS or equivalent sends an execute command to the PCM.

  — As the KOER self-test is performed, the PCM performs inspection for the set DTCs and if a malfunction is detected the DTC is displayed on the WDS or equivalent.

KOEO/KOER self-test function table

×: Applicable
—: Not applicable

DTC No.	Condition	KOEO	KOER
P0010	CMP actuator circuit malfunction	×	×
P0011	CMP timing over advanced	—	×
P0012	CMP timing over retarded	—	×
P0031	Front HO2S heater circuit low	×	×
P0032	Front HO2S heater circuit high	×	×
P0037	Rear HO2S heater circuit low	×	×
P0038	Rear HO2S heater circuit high	×	×
P0101	MAF sensor inconsistent with TP sensor	—	—
P0102	MAF circuit low input	×	×
P0103	MAF circuit high input	×	×
P0107	MAP sensor circuit low input	×	×
P0108	MAP sensor circuit high input	×	×
P0111	IAT circuit performance problem	—	—
P0112	IAT circuit low input	×	×
P0113	IAT circuit high input	×	×
P0117	ECT circuit low input	×	×
P0118	ECT circuit high input	×	×
P0121	Throttle position stuck close	—	—
P0122	TP circuit low input	×	×
P0123	TP circuit high input	×	×
P0125	Excessive time to enter closed loop fuel control	—	—
P0131	Front HO2S no inversion (low stuck)	—	—
P0132	Front HO2S no inversion (high stuck)	—	×
P0133	Front HO2S circuit malfunction	—	—
P0134	Front HO2S circuit no activity detected	—	×
P0138	Rear HO2S circuit high input	—	—
P0140	Rear HO2S circuit no activity detected	—	×
P0171	Fuel trim system too lean	—	×
P0172	Fuel trim system too rich	—	×
P0300	Random misfire detected	—	—
P0301	Cylinder No.1 misfire detected	—	—
P0302	Cylinder No.2 misfire detected	—	—
P0303	Cylinder No.3 misfire detected	—	—
P0304	Cylinder No.4 misfire detected	—	—
P0327	Knock sensor circuit low input	×	×
P0328	Knock sensor circuit high input	×	×
P0335	CKP sensor circuit malfunction	—	—
P0340	CMP sensor circuit malfunction	—	—
P0403	EGR valve motor coils open or short	×	×
P0420	Catalyst system efficiency below threshold	—	—
P0443	Evaporative emission control system purge control valve circuit malfunction	—	×
P0480	Fan relay control circuit malfunction	×	×
P0500	Vehicle speed sensor (VSS) circuit malfunction	—	—
P0505	Idle control system malfunction	—	×
P0506	Idle control system RPM lower than expected	—	—
P0507	Idle control system RPM higher than expected	—	—
P0511	IAC valve circuit malfunction	×	×
P0550	PSP switch circuit malfunction	—	—
P0602	PCM programming error	×	×
P0610	Control module vehicle options error	×	×
P0661	VIS control circuit low input	×	×
P0662	VIS control circuit high input	×	×

DTC No.	Condition	KOEO	KOER
P0703	Brake switch input malfunction	—	—
P0704	Clutch switch input malfunction	—	—
P0850	Neutral switch input malfunction	—	—
P1410	Variable air duct valve circuit malfunction	×	×
P1562	PCM +BB voltage low	×	×
P2006	Variable tumble control system shutter valve stuck close	—	—
P2009	Variable tumble control solenoid valve circuit low input	×	×
P2010	Variable tumble control solenoid valve circuit high input	×	×
P2228	BARO sensor circuit low input	×	×
P2229	BARO sensor circuit high input	×	×
P2502	Generator output voltage signal no electricity	—	×
P2503	Battery overcharge	—	×
P2504	Generator terminal B circuit open	—	×
U0073	CAN bus off	×	×
U0121	PCM cannot receive any signals from ABS, ABS/TCS or DSC HU/CM	×	×
U0155	PCM cannot receive any signals from combination meter	×	×

ENGINE ELECTRICAL SYSTEM

ABBREVIATIONS G-2
ABBREVIATIONS G-2
OUTLINE G-2
OUTLINE OF CONSTRUCTION G-2
FEATURES G-2
SPECIFICATIONS G-2
STRUCTURAI VIEW G-3
CHARGING SYSTEM G-4
GENERATOR G-4
IGNITION SYSTEM G-5
IGNITION COIL G-5
SPARK PLUG G-6
STARTING SYSTEM G-6
STARTER G-6

ABBREVIATIONS

ABBREVIATIONS

A6E470102000T01

B+	Battery positive voltage
DLI	Distributorless Ignition

OUTLINE

OUTLINE OF CONSTRUCTION

A6E470201008T01

- Adoption of a DLI system eliminates the distributor.

FEATURES

A6E470201008T02

Improved marketability and durability
- Iridium spark plug has been adopted.

Improved reliability
- Coaxial-reduction type starter has been adopted.

Reduced size and system simplification
- Regulatorless generator with built in power transistor has been adopted.

SPECIFICATIONS

A6E470201008T03

Item			Engine type		
			L8	LF	L3
Battery	Type and capacity (5-hour rate)	European spec.	50D20L (40), 75D26L (52)		50D20L (40), 80D26L (55)
		GCC spec.	46B24LS (36)	46B24LS (36), 75D26L (52)*	46B24LS (36)
	Voltage (V)		12		
Generator	Output (V-A)		12-90		
	Regulated voltage		Controlled by PCM		
	Self-diagnosis function				
Ignition system	Type		DLI (Distributorless Ignition)		
	Spark advance		Electronic		
	Firing order		1—3—4—2		
Spark plug	Type	NGK	ITR6F-13		
Starter	Type		Coaxial reduction		
	Output (kW)		1.0		1.4

*: Intensely hot area

STRUCTURAL VIEW

A6E470201008T04

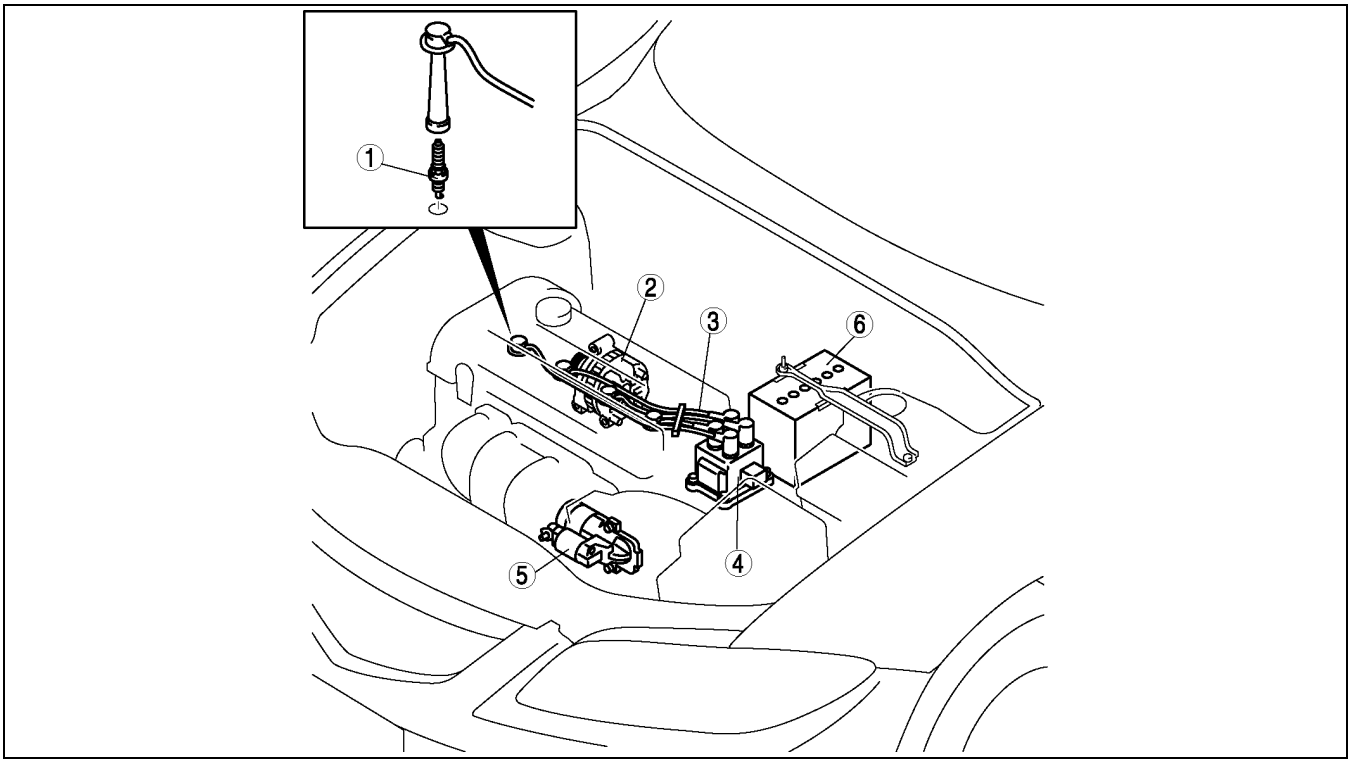

AME4702N001

1	Spark plug
2	Generator
3	High-tension lead

4	Ignition coil
5	Starter
6	Battery

CHARGING SYSTEM

GENERATOR

A6E471001008T02

Structure

- The voltage regulator has been eliminated, and generator control is carried out by the PCM.
- A Generator duct made of plastic and generator heat insulator made of iron have been adopted to protect the generator from the exhaust manifold heat.

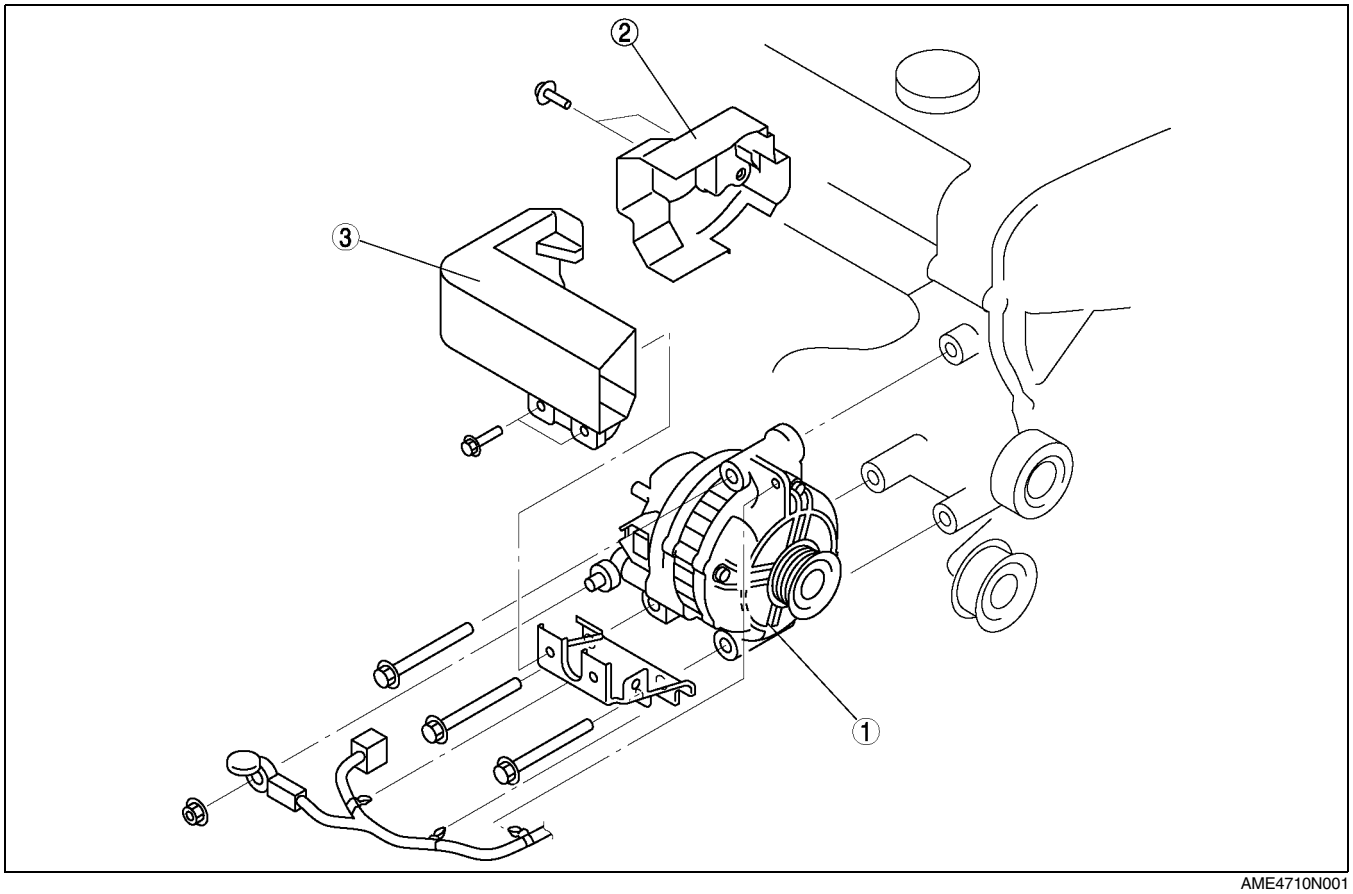

AME4710N001

1	Generator
2	Generator heat insulator

3	Generator duct

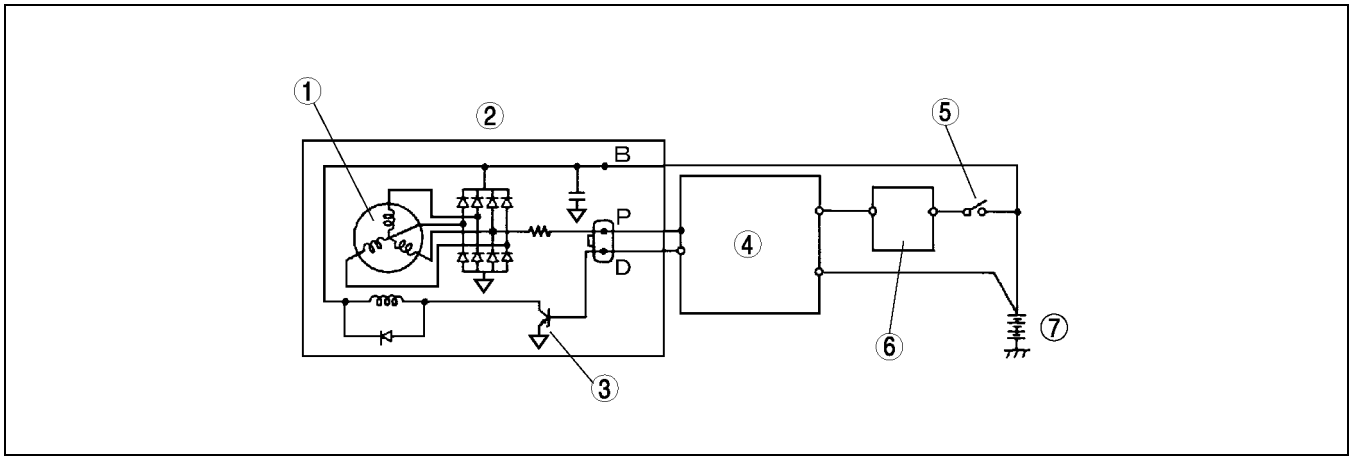

AME4710N002

1	Stator coil
2	Generator
3	Power transistor
4	PCM

5	Ignition switch
6	Generator warning light
7	Battery

IGNITION SYSTEM

IGNITION COIL

A6E471201008T04

Structure

- The ignition coil contains two coils. They are for cylinder numbers 1 and 4, and cylinder numbers 2 and 3 respective.(Matched pairs)
- The two secondary terminals contain the secondary coils positive and negative terminals. The closed circuit of secondary coils is formed through the high-tension leads, two spark plugs and the cylinder head. Due to this, one coil ignites two cylinders simultaneously.
- The firing timing of the coil is controlled by the PCM due to built-in ignition system. (Section F)

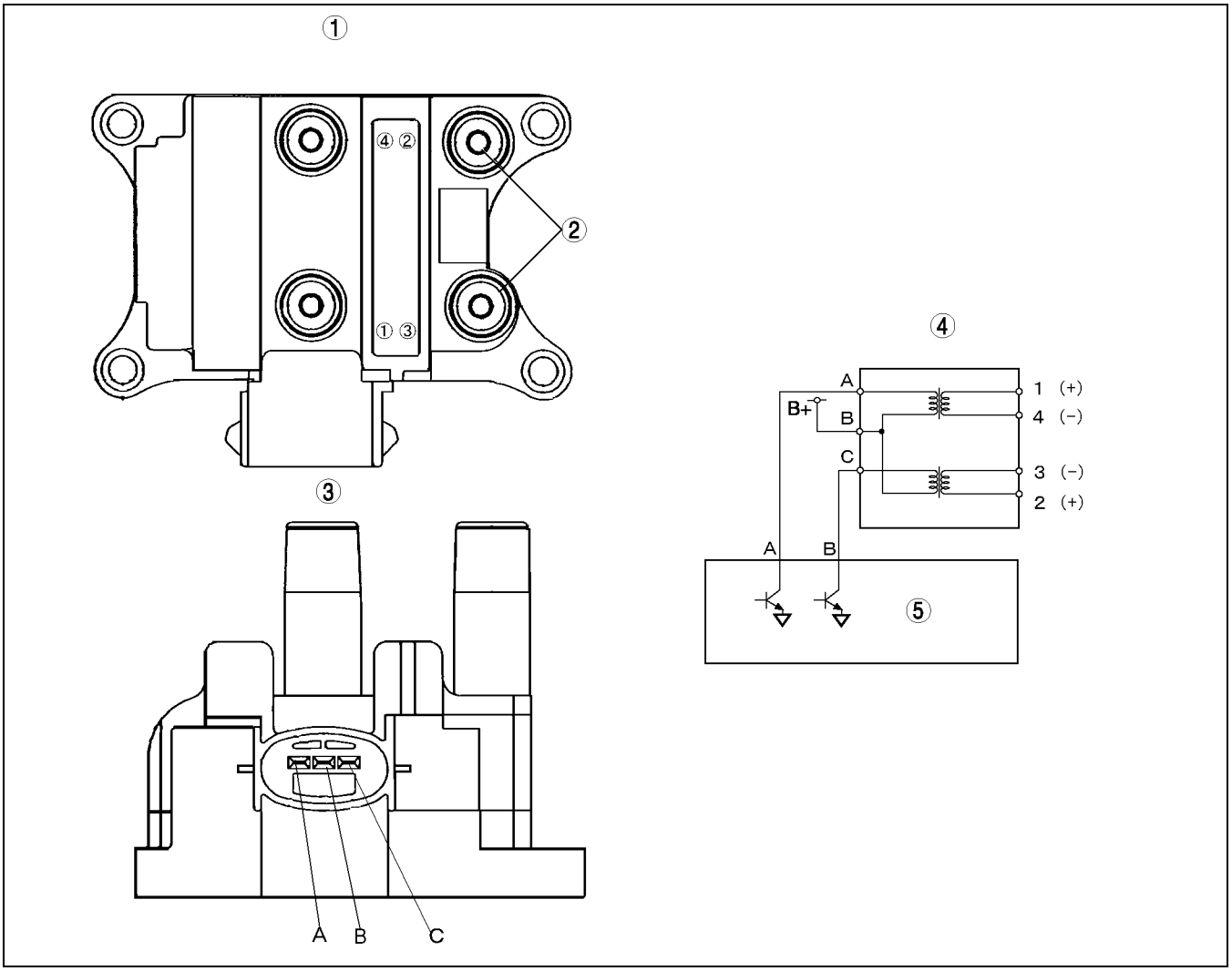

AME4712N001

1	Ignition coil upper surface figure
2	Two secondary terminals
3	Ignition coil side view

4	Ignition coil
5	PCM

Terminal layout

Terminal		Signal
3 terminals	A	Ignition coil control signal 2 (No.1, No.4)
	B	Power supply
	C	Ignition coil control signal 1 (No.2, No.3)

SPARK PLUG

A6E471201008T02

Structure

- The iridium spark plug with excellent durability and firing performance has been adopted.
- The extremely thin, center electrode has a diameter of 0.6 mm {0.023 in} and is made of iridium alloy. Also, durability has been improved by the use of a platinum-tipped grounding electrode.
- Based on the thinner electrode (center electrode), electric discharge has been reduced and ignition has been improved, resulting in stable ignition performance in all driving conditions and a substantial improvement in fuel economy.

1	Iridium alloy
2	Platinum-tipped

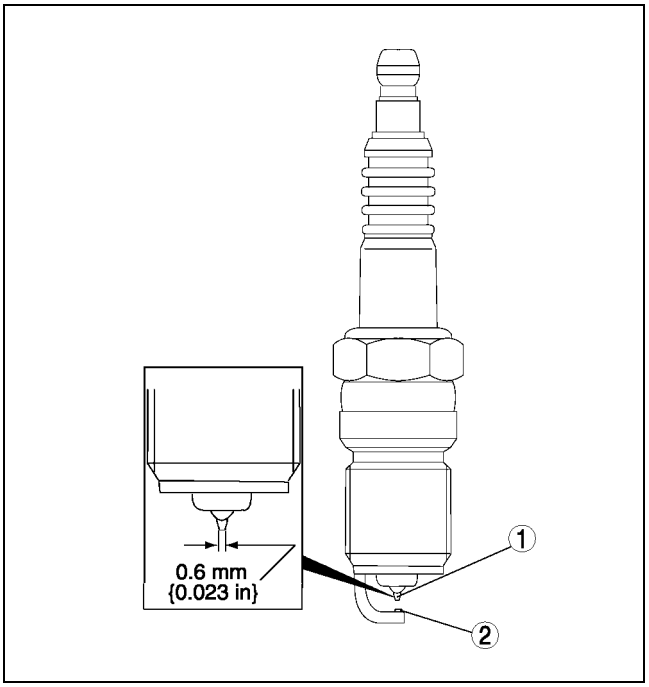

AME4712N002

STARTING SYSTEM

STARTER

A6E471401008T02

Structure

- High torque coaxial reduction type starter has been adopted.

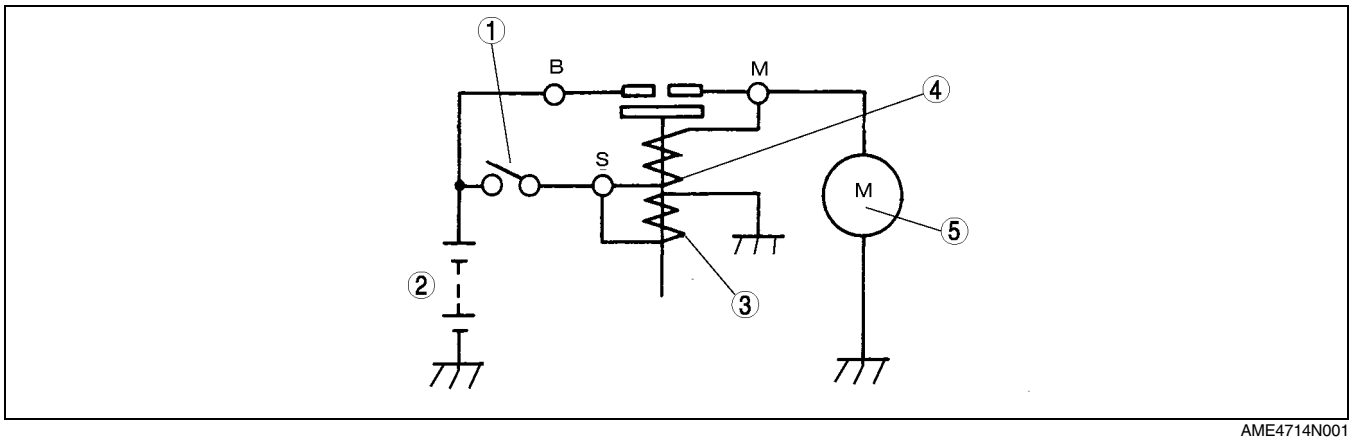

AME4714N001

1	Ignition switch
2	Battery
3	Holding coil

4	Pull-in coil
5	Motor

CLUTCH

OUTLINE H-2
OUTLINE OF CONSTRUCTION H-2
SPECIFICATIONS H-2

OUTLINE

OUTLINE OF CONSTRUCTION

A6E490216003T01

- The construction and operation of the clutch is essentially carried over from that of the current MPV (LW) models. (See Mazda MPV Training Manual 3340-1E-99F)

SPECIFICATIONS

A6E490216003T03

Item			Mazda6 (GG)				Current MPV (LW)
			R.H.D.		L.H.D.		
Engine			**L3, LF**	**L8**	**L3, LF**	**L8**	**FS**
Manual transaxle type			**G35M-R**				**G15M-R**
Clutch control			Hydraulic				
Clutch cover	Spring type		Diaphragm				
	Set load	(N {kgf, lbf})	6,000 {611, 1,350}	5,200 {530, 1,170}	6,000 {611, 1,350}	5,200 {530, 1,170}	
Clutch disc	Outer diameter	(mm {in})	215 {8.46}				225 {8.86}
	Inner diameter	(mm {in})	150 {5.91}				
Clutch pedal	Type		Suspended				
	Pedal ratio		6.6				6.55
	Full stroke	(mm {in})	135.6 {5.339}		140 {5.51}		135 {5.31}
Clutch master cylinder inner diameter		(mm {in})	15.87 {0.625}				
Clutch release cylinder inner diameter		(mm {in})	19.05 {0.750}				
Clutch fluid type			European (L.H.D. U.K.) specs.: SAE J1703, FMVSS116 DOT3 OR DOT4 GCC specs.: SAE J1703, FMVSS116 DOT3				SAE J1703, FMVSS116 DOT3 OR DOT4

Bold frames:New specifications

MANUAL TRANSAXLE

OUTLINE J-2
OUTLINE OF CONSTRUCTION J-2
FEATURES J-2
SPECIFICATIONS J-2
MANUAL TRANSAXLE J-3
CROSS-SECTION VIEW J-3

OUTLINE

OUTLINE OF CONSTRUCTION

A6E510201025T01

- The construction and operation of the transaxle are the same as those of the current G15M-R type manual transaxle, except for the following features. (See Mazda MPV Training Manual 3340-1E-99F) However, the following items have been changed.

FEATURES

Improved marketability

- The operation system has been changed from rod type operation system to cable type.
- The gear ratio has been changed.

SPECIFICATIONS

A6E510201025T03

Item			Mazda6 (GG)		Current MPV (LW)
Engine			**L8, LF**	**L3**	**FS**
Transaxle type			G35M-R		G15M-R
Transaxle control			Floor-shift		
Operation system			Cable		Rod
Shift assist	Forward		Synchromesh		
	Reverse		Selective sliding and synchromesh		
Gear ratio	1st		3.666	3.307	
	2nd		2.059	1.842	
	3rd		1.392	1.233	1.310
	4th		0.970		
	5th		0.755		
	Reverse		3.166		
Final gear ratio			4.388		4.588
Oil	Grade		API service GL-4 or GL-5		
	Viscosity	All season	SAE 75W-90		
		Above 10°C {50°F}	SAE 80W-90		
	Capacity (L {US qt, Imp qt})		2.87 {3.03, 2.53}		2.70 {2.85, 2.38}

Bold frames:New specifications

MANUAL TRANSAXLE

CROSS-SECTION VIEW

A6E511201025T02

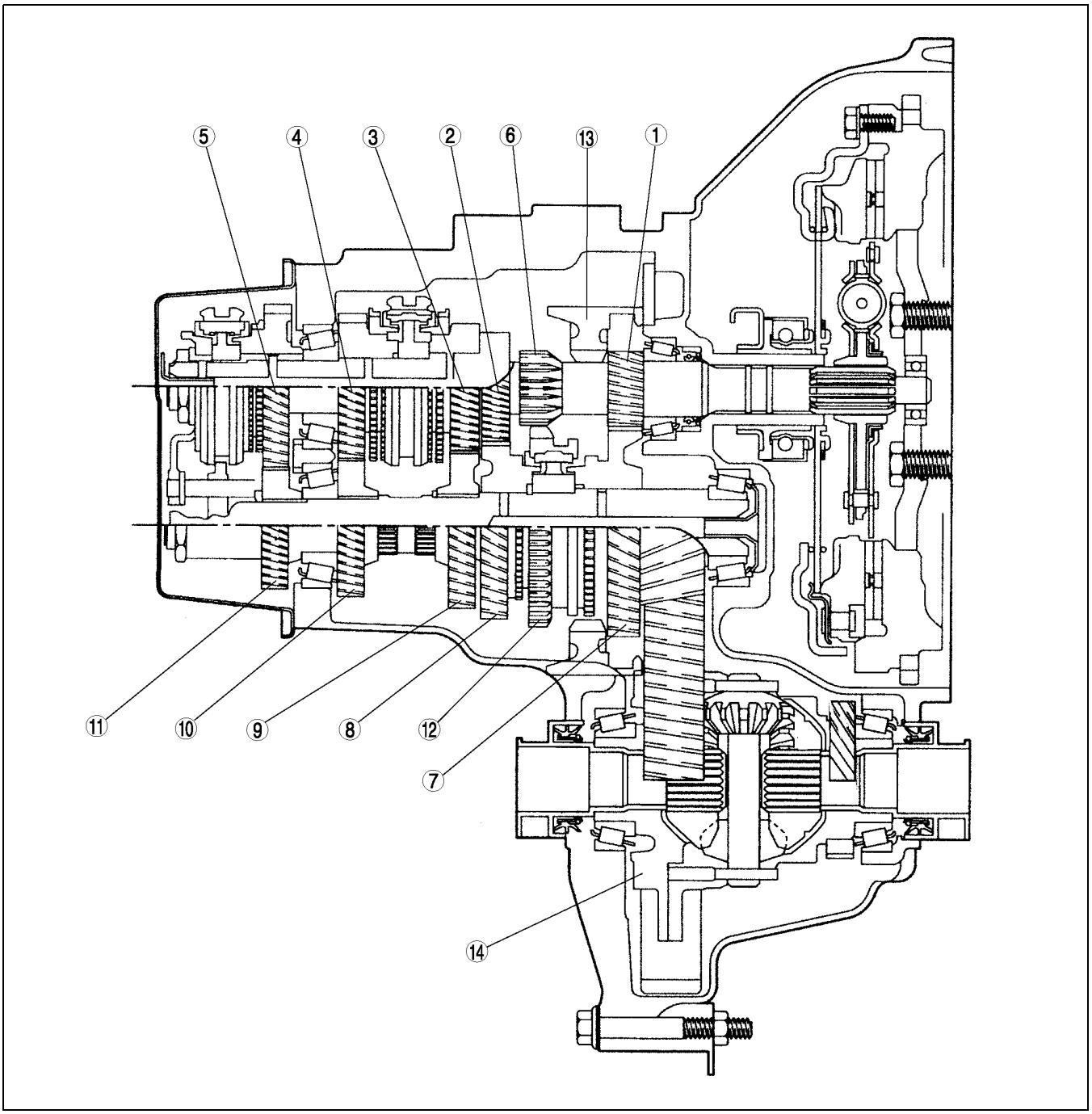

A6E5112T001

1	1st gear
2	2nd gear
3	3rd gear
4	4th gear
5	5th gear
6	Reverse gear
7	Secondary 1st gear

8	Secondary 2nd gear
9	Secondary 3rd gear
10	Secondary 4th gear
11	Secondary 5th gear
12	Clutch hub sleeve (reverse gear)
13	Reverse idler gear
14	Diffential

AUTOMATIC TRANSAXLE

ABBREVIATIONS K-2
ABBREVIATIONS K-2
OUTLINE K-2
OUTLINE OF CONSTRUCTION K-2
FEATURES K-2
SPECIFICATIONS K-2
AUTOMATIC TRANSAXLE K-3
OUTLINE K-3
CROSS-SECTIONAL VIEW K-4
OUTLINE OF OPERATION K-5
EC-AT OPERATION CHART K-7
POWERFLOW K-8
ELECTRONIC CONTROL SYSTEM K-9
OUTLINE K-9
CONSTRUCTION K-10
BLOCK DIAGRAM K-11
ELECTRONIC CONTROL ITEMS AND CONTENTS K-12
COMPONENT DESCRIPTIONS (ELECTRONIC CONTROL) K-12
INPUT/OUTPUT SIGNAL AND RELATED CONTROLS K-13
AUTOMATIC TRANSAXLE SHIFT MECHANISM K-14
OUTLINE K-14
STRUCTURAL VIEW K-14
SHIFT-LOCK SYSTEM K-14
ON-BOARD DIAGNOSTIC K-16
OUTLINE K-16
DTC COMPARISON LISTS K-16
ON-BOARD DIAGNOSTIC SYSTEM K-16
FAIL-SAFE FUNCTION K-19
PARAMETER IDENTIFICATION (PID) ACCESS K-20

ABBREVIATIONS

ABBREVIATIONS

A6E560101030T01

ATF	Automatic transaxle fluid
EC-AT	Electronically controlled automatic transaxle
PCM	Powertrain control module
TCC	Torque converter clutch
1GR	First gear
2GR	Second gear
3GR	Third gear
4GR	Fourth gear

OUTLINE

OUTLINE OF CONSTRUCTION

A6E560201030T01

- The construction and operation of the FN4A-EL type automatic transaxle of the Mazda6 (GG) is essentially carried over from that of the current PREMACY (CP) FN4A-EL automatic transaxle models, except for the following features. (See PREMACY Training Manual 3351-1A-01A.)

FEATURES

A6E560201030T02

Improved reliability

- The conclusion type of differential ring gear has been changed from a rivet type to a bolt type.
- Adoption of a oil pressure switch.

SPECIFICATIONS

A6E560201030T03

Item			Mazda6 (GG)	Current PREMACY (CP)
Engine			**LF**	**FS**
Transaxle type			FN4A-EL	
Gear ratio		1GR	2.816	
		2GR	1.497	
		3GR	1.000	
		4GR	0.725	
		Reverse	2.648	
Final gear ratio			4.416	3.904
ATF	Type		ATF M-V	ATF M-III or equivalent (e.g. Dexron® II)
	Capacity (Approximate quantity)	L {US qt, Imp qt}	7.2 {7.6, 6.3}	
Torque converter stall torque ratio			1.950	
Hydraulic system	Forward clutch (number of drive/ driven plates)		4/4	
	3-4 clutch (number of drive/driven plates)		3/3	
	Reverse clutch (number of drive/ driven plates)		2/2	
	Low and reverse brake (number of drive/driven plates)		5/5	
Band servo	Servo diameter (piston outer dia.)	mm {in}	64.6 {2.54}	
Front planetary gear (number of teeth)	Front sun gear		49	
	Front pinion gear		20	
	Front internal gear		89	

Item		Mazda6 (GG)	Current PREMACY (CP)
Engine		**LF**	**FS**
Rear planetary gear (number of teeth)	Rear sun gear	37	
	Rear pinion gear	30	
	Rear internal gear	98	
Primary gear		86	
Secondary gear		82	
Output gear		19	21
Ring gear		88	86

Bold frames:New specifications

AUTOMATIC TRANSAXLE

OUTLINE

A6E561401030T01

- The FN4A-EL type automatic transaxle is used.
- The construction and operation of the FN4A-EL type automatic transaxle of the New Mazda6 (GG) is essentially carried over from that of the current PREMACY (CP) .

CROSS-SECTIONAL VIEW

A6E561401030T02

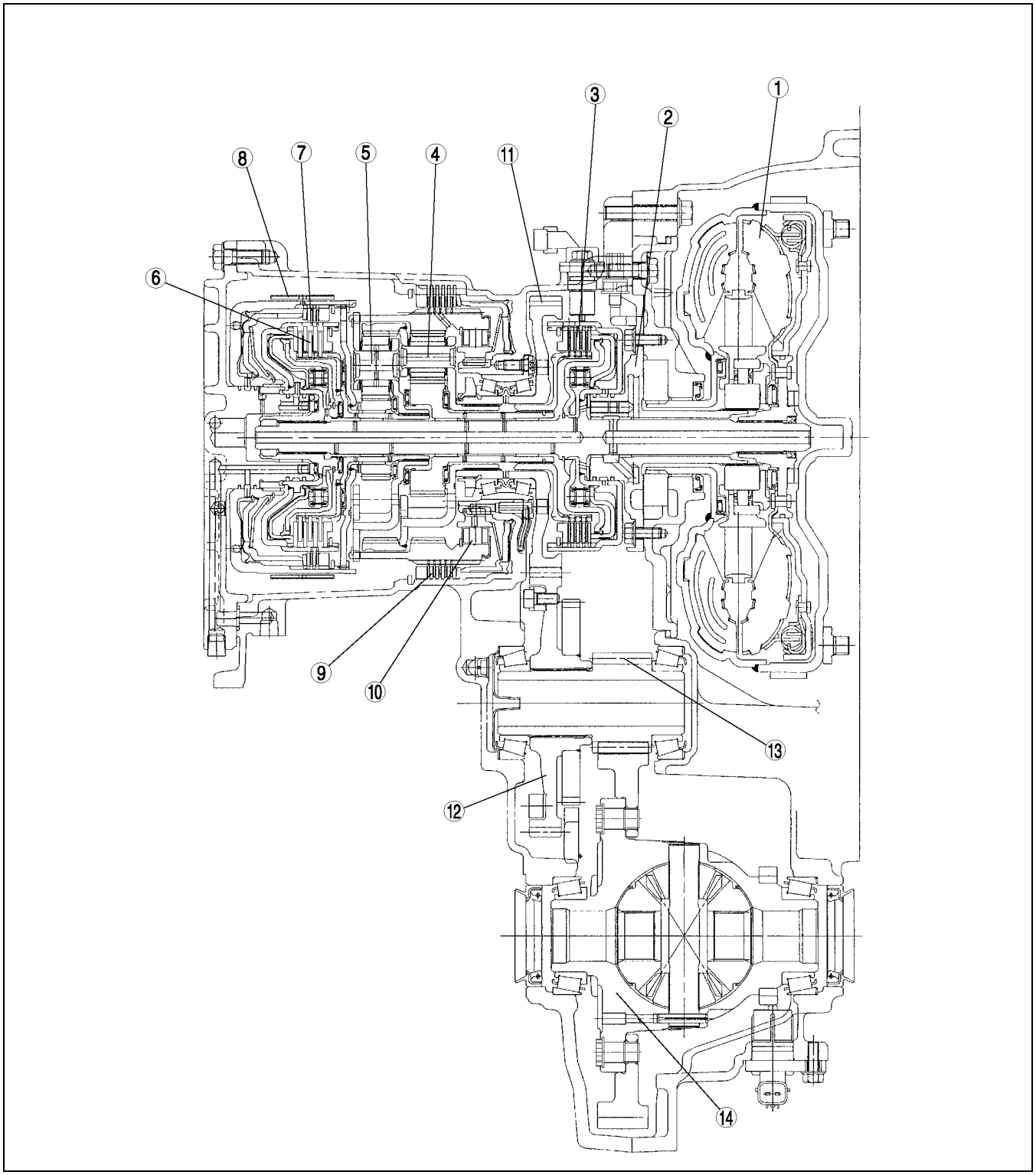

A6E5614T001

1	Torque converter
2	Oil pump
3	Forward clutch
4	Front planetary gear
5	Rear planetary gear
6	3-4 clutch
7	Reverse clutch

8	2-4 brake band
9	Low and reverse brake
10	One-way clutch
11	Primary gear
12	Secondary gear
13	Output gear
14	Differential

OUTLINE OF OPERATION

A6E561401030T03

- The operation of the electronic automatic transaxle is classified into three systems: the electronic control mechanism, the hydraulic pressure control mechanism, and the powertrain mechanism (includes the torque converter mechanism). The operation of each system is as follows:
  - — Electronic control mechanism
    - According to the signals from the switches and sensors in the input system, the PCM outputs the signal which matches the present driving condition to the linear type solenoid, ON/OFF type solenoids and the duty-cycle type solenoids in the hydraulic pressure control mechanism.
  - — Hydraulic pressure control mechanism
    - According to the signals from the PCM, each solenoid operates to switch the hydraulic passages in the control valve body and controls the clutch engagement pressure.
    - The line pressure is adjusted by the linear type pressure control solenoid. The hydraulic passages are switched by the ON/OFF type solenoids (shift solenoids D and E.) And the clutch engagement pressure is controlled by the duty-cycle type solenoids (shift solenoids A, B, and C).
  - — Powertrain mechanism
    - The driving force from the engine is transmitted through the torque converter to the transaxle.
    - The transmitted driving force operates each clutch and brake according to the clutch engagement pressure from the duty-cycle type solenoid, and the planetary gears change the gear ratio to the optimal driving force. The changed driving force is transmitted through the differential to the axle shaft and then the tires.

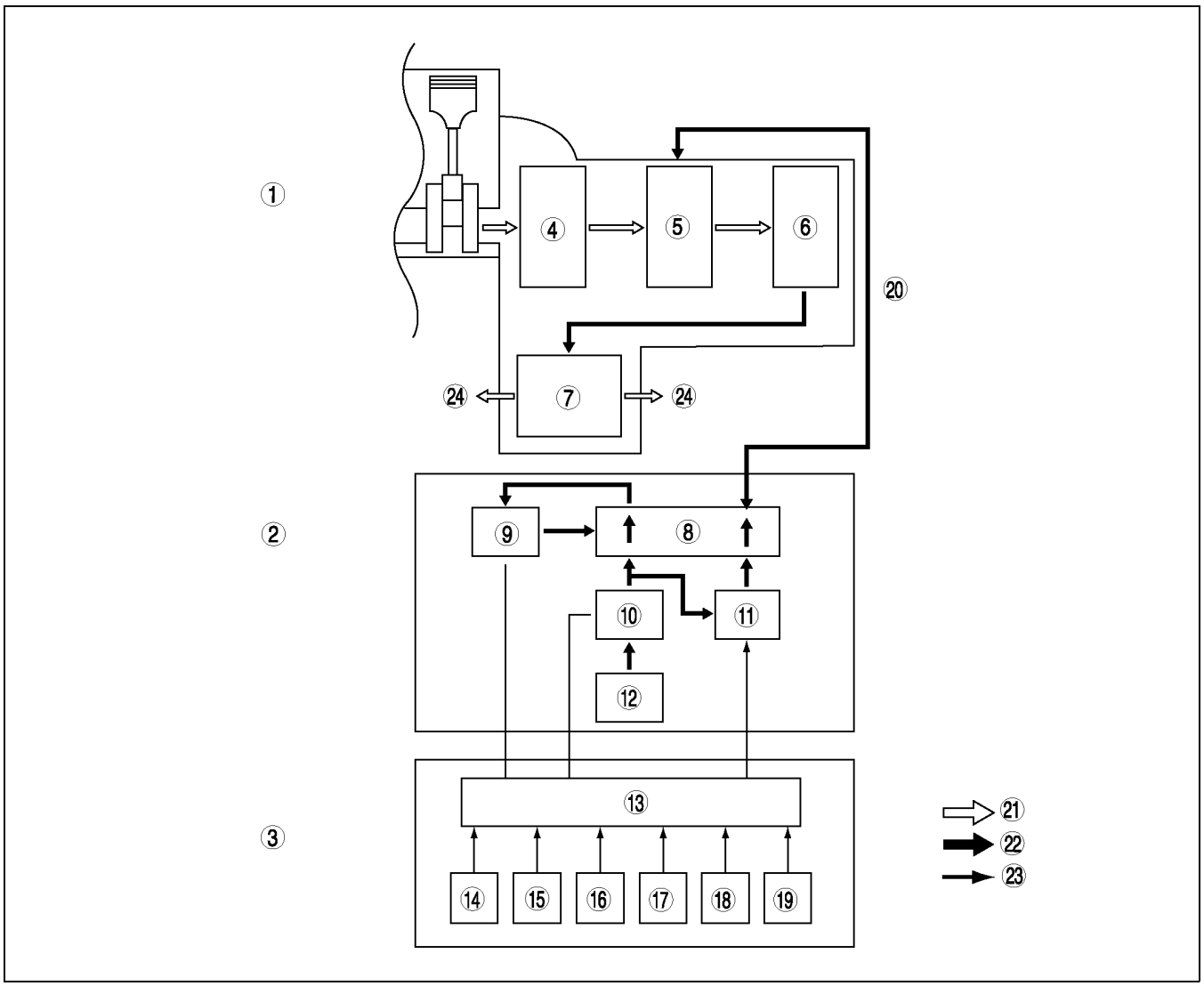

A6E5614T002

1	Powertrain mechanism
2	Hydraulic pressure control mechanism
3	Electronic control mechanism
4	Torque converter
5	Clutches, brakes
6	Planetary gear
7	Differential
8	Control valve body
9	Shift solenoid D, E (ON/OFF type)
10	Pressure control solenoid (linear type)
11	Shift solenoid A, B, C (duty-cycle type)
12	Oil pump

13	PCM
14	Oil pressure switch signal
15	Vehicle speed
16	ATF temprature
17	Forward clutch drum revolution speed
18	Engine revolution speed
19	Throttle position signal
20	Clutches, brakes engagement, relase pressure
21	Powerflow
22	Hydraulic pressure control signal
23	Electronic signal
24	Tire

EC-AT OPERATION CHART

A6E561401030T04

position/Range	Mode	Gear position		Shift pattern			Transaxle							Operation of shift solenoid				
										2–4 brake band				Solenoid valve (duty-cycle type)			Solenoid valve (ON / OFF type)	
				Shift	TCC	Engine brake	Forward clutch	3–4 clutch	Reverse clutch	Applied	Released	Low and reverse brake	One-way clutch	Shift solenoid A	Shift solenoid B	Shift solenoid C	Shift solenoid D	Shift solenoid E
P	–	–	–	–										–	–	–	ON	OFF
R	–	Reverse	2.648	–		×			×			×		OPEN	OPEN	OPEN	OFF	OFF
N	–	–	–	–										–	–	–	ON	OFF
D	*1 POWER/ NORMAL	1GR	2.816	↕			×						⊗	OPEN	CLOSED	CLOSED	OFF	OFF
		2GR	1.497	↕		×	×			×				OPEN	OPEN	CLOSED	OFF	OFF
		3GR	1.000	↕		×	×	×		×	×			OPEN	OPEN	OPEN	OFF	OFF
		4GR	0.725	↕		×		×		×				CLOSED	OPEN	OPEN	ON	OFF
		4GR *2 TCC ON	0.725		×	×		×		×				CLOSED	OPEN	OPEN	ON	ON
	HOLD	2GR	1.497	↑		×	×			×				OPEN	OPEN	CLOSED	OFF	OFF
		3GR	1.000	↕		×	×	×		×	×			OPEN	OPEN	OPEN	OFF	OFF
		4GR *3	0.725			×		×		×				CLOSED	OPEN	OPEN	ON	OFF
S	Non-HOLD	1GR	2.816	↕			×						⊗	OPEN	CLOSED	CLOSED	OFF	OFF
		2GR	1.497	↕		×	×			×				OPEN	OPEN	CLOSED	OFF	OFF
		3GR	1.000	↕		×	×	×		×	×			OPEN	OPEN	OPEN	OFF	OFF
		4GR *3	0.725			×		×		×				CLOSED	OPEN	OPEN	ON	OFF
	HOLD	2GR	1.497	↑		×	×			×				OPEN	OPEN	CLOSED	OFF	OFF
		3GR *3	1.000	↑		×	×	×		×	×			OPEN	OPEN	OPEN	OFF	OFF
		4GR *3	0.725			×		×		×				CLOSED	OPEN	OPEN	ON	OFF
L	Non-HOLD	1GR	2.816	↑		×	×					×	⊗	OPEN	OPEN	CLOSED	ON	ON
		2GR	1.497	↕		×	×			×				OPEN	OPEN	CLOSED	OFF	OFF
		3GR *3	1.000	↑		×	×	×		×	×			OPEN	OPEN	OPEN	OFF	OFF
		4GR *3	0.725			×		×		×				CLOSED	OPEN	OPEN	ON	OFF
	HOLD	1GR	2.816	↑		×	×					×	⊗	OPEN	OPEN	CLOSED	ON	ON
		2GR *3	1.497	↑		×	×			×				OPEN	OPEN	CLOSED	OFF	OFF
		3GR *3	1.000	↑		×	×	×		×	×			OPEN	OPEN	OPEN	OFF	OFF
		4GR *3	0.725			×		×		×				CLOSED	OPEN	OPEN	ON	OFF

*1: Automatically switches between POWER and NORMAL modes according to accelerator pedal depressing speed.
*2: Performs TCC operation in NORMAL mode.
*3: To prevent engine overspeed inhibits downshift until the engine speed is reduced to the preset speed.
×: Operating
⊗: Transmits the torque only when driving.
OPEN: Engages the line pressure to the clutch pressure.
CLOSED: Drains the clutch pressure.
ON: Engages the output port and the supply port (Solenoid reducing pressure).
OFF: Engages the output port and the drain port (Drains the output port).

A6E5614T003

POWERFLOW

A6E561401030T05

Outline

- In the powertrain mechanism, hydraulic pressure is transported from the control valves or shift solenoid A, B, or C (duty cycle type) to operate the clutches and brakes, and the planetary gear changes the gear ratio according to the vehicle driving condition.

Structure

- The powertrain mechanism of the FN4A-EL type consists of three pairs of clutches, brake, band brake, one-way clutch, and two pairs of single type planetary gears.

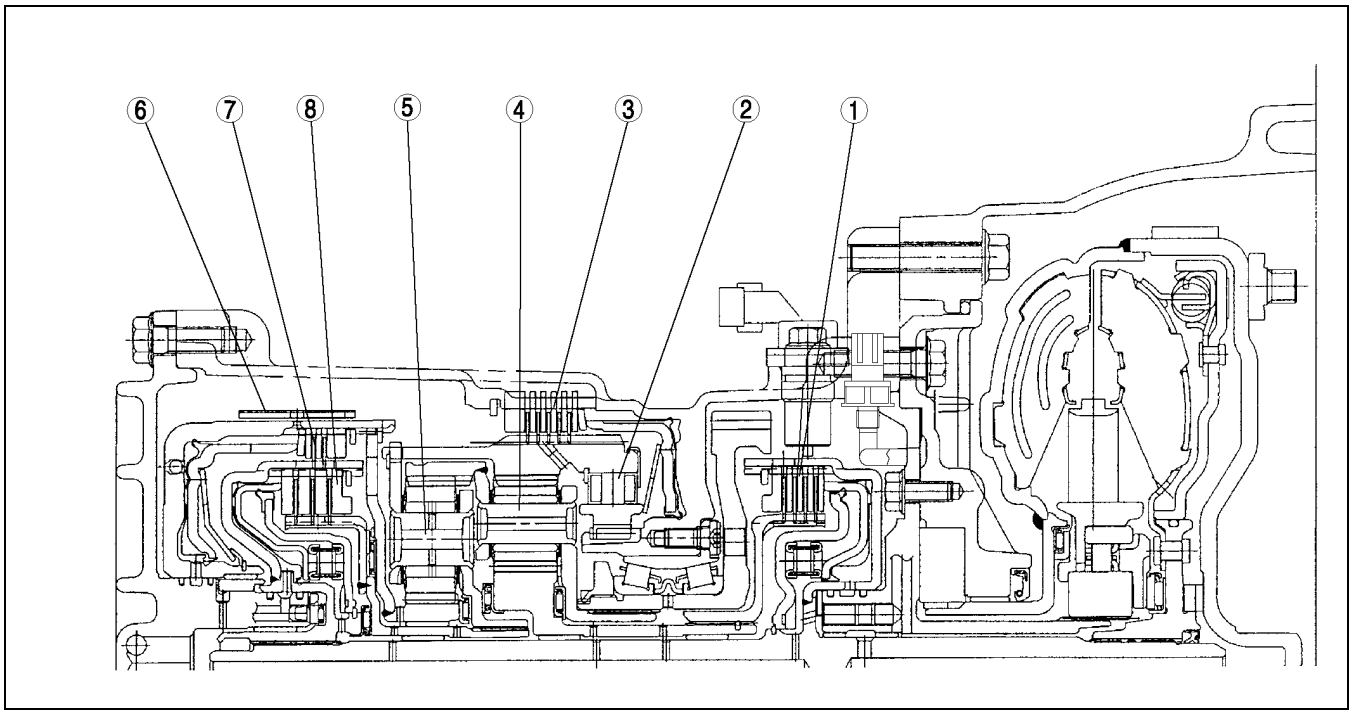

A6E5614T004

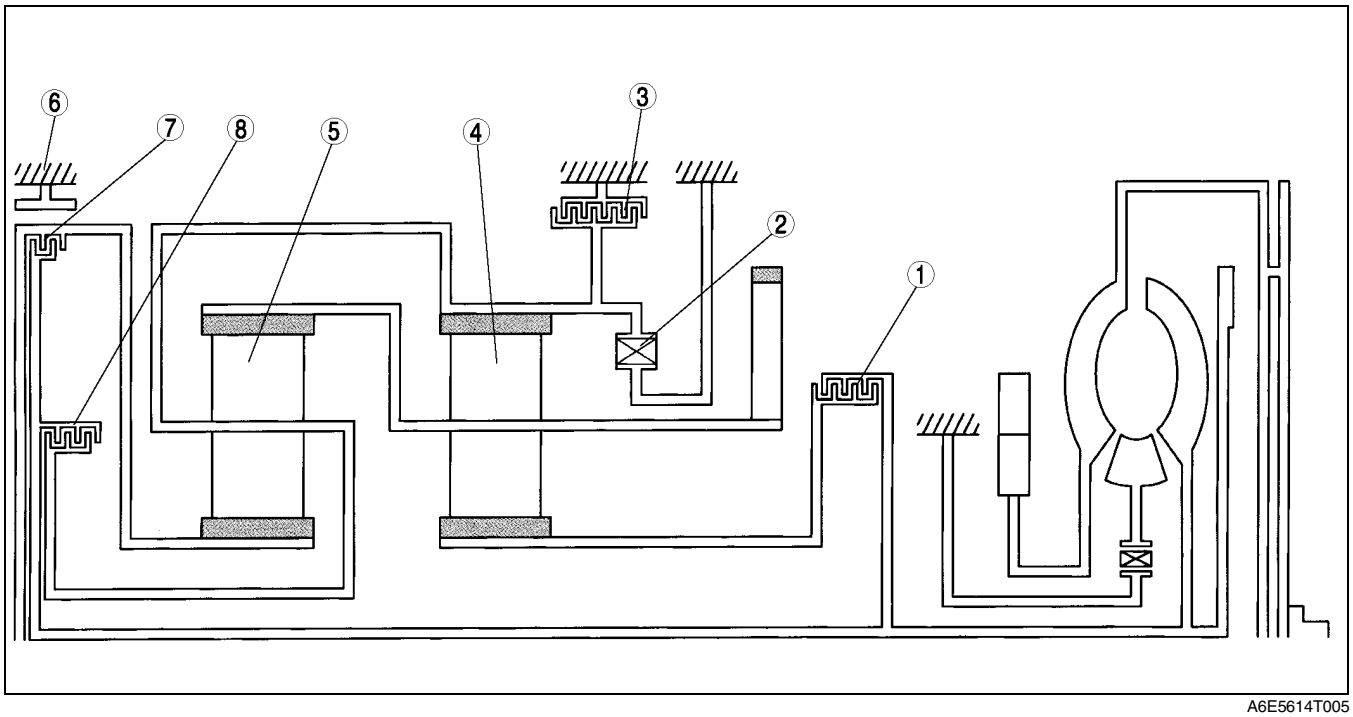

A6E5614T005

1	Forward clutch
2	One-way clutch
3	Low and reverse brake
4	Front planetary gear

5	Rear planetary gear
6	2-4 brake band
7	Reverse clutch
8	3-4 clutch

Operation
Component description

Component	Function
Forward clutch	• Transmits input torque from turbine shaft to front sun gear • Operates in forward range of first, second, or third gear position
3-4 clutch	• Transmits input torque from turbine shaft to rear planetary carrier • Operates in forward range of third or fourth gear position
Reverse clutch	• Transmits input torque from turbine shaft to rear sun gear • Operates when vehicle is backing
2-4 brake band	• Locks rotation of reverse drum, and fixes rear sun gear • Operates in second or fourth gear position
Low and reverse brake	• Fixes rotation of front internal gear • Operates when vehicle is backing or in first gear position (L range, HOLD)
One-way clutch	• Locks counterclockwise rotation of front internal gear in first gear position
Planetary gear	• The planetary gear functions as a transmission due to the engagement/ disengagement of clutches and/or brakes, converts the transmitted driving force of the turbine shaft and transmits it to the output gear.

Note
- All directions of rotation are viewed from the torque converter.

ELECTRONIC CONTROL SYSTEM

OUTLINE

A6E561501030T01

- The PCM, which is integrated with the PCM for engine control, is adopted for transaxle control. The PCM outputs the control signal to the engine and the transaxle according to the signal from each sensor and/or switch.
- Due to the adoption of the line pressure adjusting control by the linear type pressure control solenoid and the clutch engaging pressure control by duty-cycle type shift solenoids A, B, and C, excellent shift quality is obtained.

CONSTRUCTION

A6E561501030T02

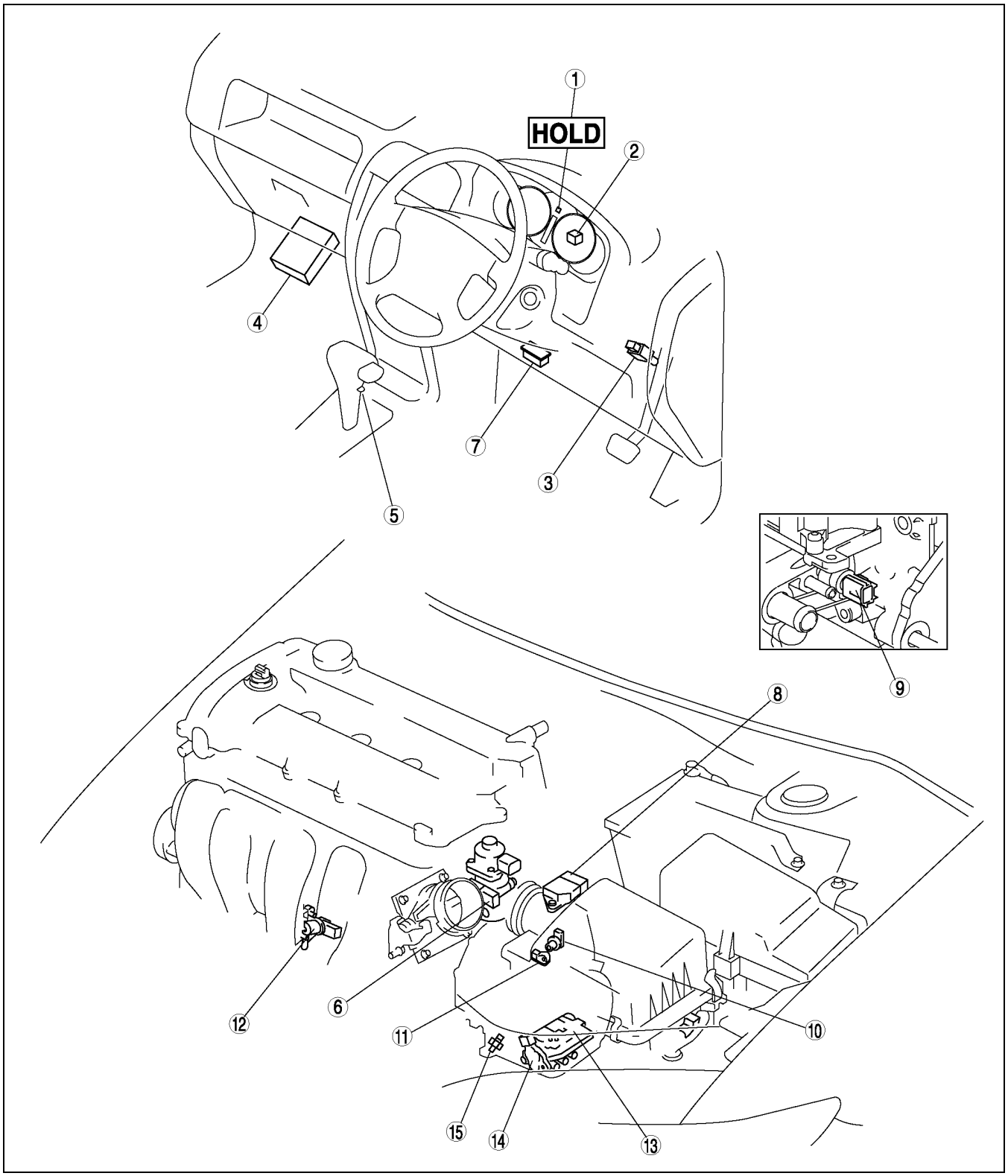

A6E5614T007

1	HOLD indicator light
2	Speedometer
3	Brake switch
4	PCM
5	HOLD switch
6	Throttle position sensor
7	DLC
8	Mass air flow sensor

9	Engine coolant temperature sensor
10	Vehicle speed sensor
11	Input /turbine speed sensor
12	Crankshaft position sensor
13	Control valve (With transaxle fluid temperature sensor and solenoid valves)
14	Transaxle range swich
15	Oil pressure switch

BLOCK DIAGRAM

A6E561501030T03

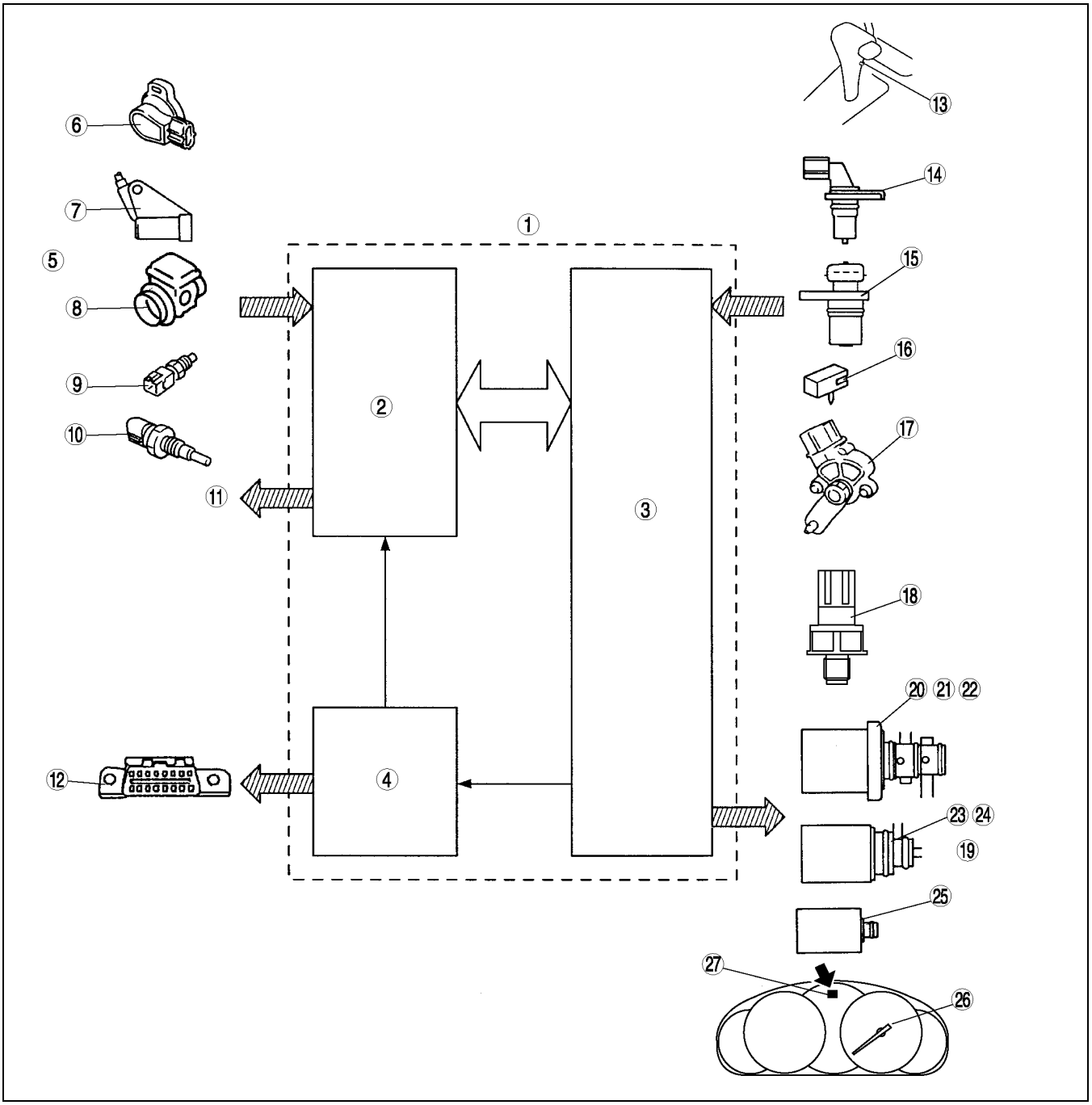

A6E5614T006

1	PCM
2	Engine control system
3	Transaxle control system
4	On-board diagnostic system
5	Input signals
6	Throttle position sensor
7	Crankshaft position sensor
8	Mass air flow sensor
9	Brake switch
10	Engine coolant templature sensor
11	Engine control output signals
12	Data link connector
13	HOLD switch
14	Input/turbine speed sensor

15	Vehicle speed sensor
16	Transaxle fluid temperature sensor
17	Transaxle range switch
18	Oil pressure switch
19	Output signals
20	Shift solenoid A
21	Shift solenoid B
22	Shift solenoid C
23	Shift solenoid D
24	Shift solenoid E
25	Pressure control solenoid
26	Speedometer signal
27	HOLD indicator light

ELECTRONIC CONTROL ITEMS AND CONTENTS

A6E561501030T04

Item	Content
Line pressure control	• With linear type pressure control solenoid, adjusts to suitable line pressure for engine load condition and vehicle driving condition
Shift control	• Detects engine load condition and vehicle speed, and switches to the most suitable gear position according to the preset shift diagram • Selects HOLD mode by switching HOLD switch • In D range, automatically switches between POWER and NORMAL modes according to accelerator pedal depressing speed
Clutch pressure direct control (Direct electric shift control)	• With duty-cycle type shift solenoids A, B, and C, directly performs electronic control for clutch engagement pressure suitable for engine load condition and vehicle driving condition
Feedback control	• Performs real-time feedback correction for clutch engagment pressure to achieve target shifts • Performs optimal correction for clutch engagement pressure to reduce changes in engine performance and/or elapsed transaxle
Engine-transaxle total control	• Optimally controls engine output torque when shifting • Operates optimal clutch engagement pressure corresponding to engine output torque
TCC control	• According to preset TCC point, performs TCC operation via smooth TCC
Slope mode control	• Changes the shift point to prevent frequent shifting up/down when climbing hills
On-board diagnostic system	• Detects and/or memorizes failure of input/output part and transaxle condition

COMPONENT DESCRIPTIONS (ELECTRONIC CONTROL)

A6E561501030T05

Part name			Function
Input system	HOLD switch		• Selects driving modes (HOLD) and changes driving patterns
	TR switch		• Detects selector lever ranges/positions
	TP sensor		• Detects throttle valve opening angle
	Input/turbine speed sensor		• Detects forward clutch drum (input) revolution speed
	Oil pressure switch		• Detects forward clutch pressure
	VSS		• Detects differential gear case (output) revolution speed
	Brake switch		• Detects use of service brake
	TFT sensor		• Detects the ATF temperature
	ECT sensor		• Detects the engine coolant temperature
	CKP sensor		• Detects the engine revolution speed
	MAF sensor		• Detects intake air amount
Output system	Linear type	Pressure control solenoid	• Adjusts line pressure
	Duty-cycle type	Shift solenoid A	• Controls clutch engagement pressure
		Shift solenoid B	• Controls clutch engagement pressure
		Shift solenoid C	• Controls clutch engagement pressure
	ON/OFF type	Shift solenoid D	• Switches hydraulic passages for bypass valve and 3-4 shift valve
		Shift solenoid E	• Switches hydraulic passages for low and reverse shift valve, TCC, and control valve
	HOLD indicator light		• By switching HOLD switch, illuminates to indicate that it is in HOLD mode • Flashes when failure is detected by diagnosis function
	Speedometer signal		• Outputs vehicle speed signal to speedometer

INPUT/OUTPUT SIGNAL AND RELATED CONTROLS

A6E561501030T06

Component	Control item							
	Line pressure control	Shift control	Clutch pressure direct control (Direct electric shift control)	Feedback control	Engine-transaxle total control	Torque converter clutch control	Slope mode control	On-board diagnostic function
Input								
HOLD switch		X						
Transaxle range switch	X	X	X					
Throttle position sensor	X	X	X			X		X
Input/turbine speed sensor	X	O	X	X		X		X
Vehicle speed sensor	X	X	X			X	X	X
Brake switch							X	
Transaxle fluid temperature sensor	X	X	X	X		X		X
Engine coolant temperature sensor						X		X
Crankshaft position sensor	X		X		X	X		X
Mass air flow sensor	X		X	X	X		X	X
Oil pressure switch		X	X					
Output								
Pressure control solenoid	X							X
Shift solenoid A		X	X	X		X	X	X
Shift solenoid B		X	X	X				X
Shift solenoid C		X	X	X				X
Shift solenoid D		X					X	X
Shift solenoid E		X				X	X	X
HOLD indicator light		X						X
Speedometer signal								

X : Available
O : Back up

K

AUTOMATIC TRANSAXLE SHIFT MECHANISM

OUTLINE

A6E561646010T01

- The mechanical type shift lock system is essentially carried over from that of the current PREMACY (CP) models. (See Mazda PREMACY Training Manual 3351-1A-01A)

STRUCTURAL VIEW

A6E561646010T02

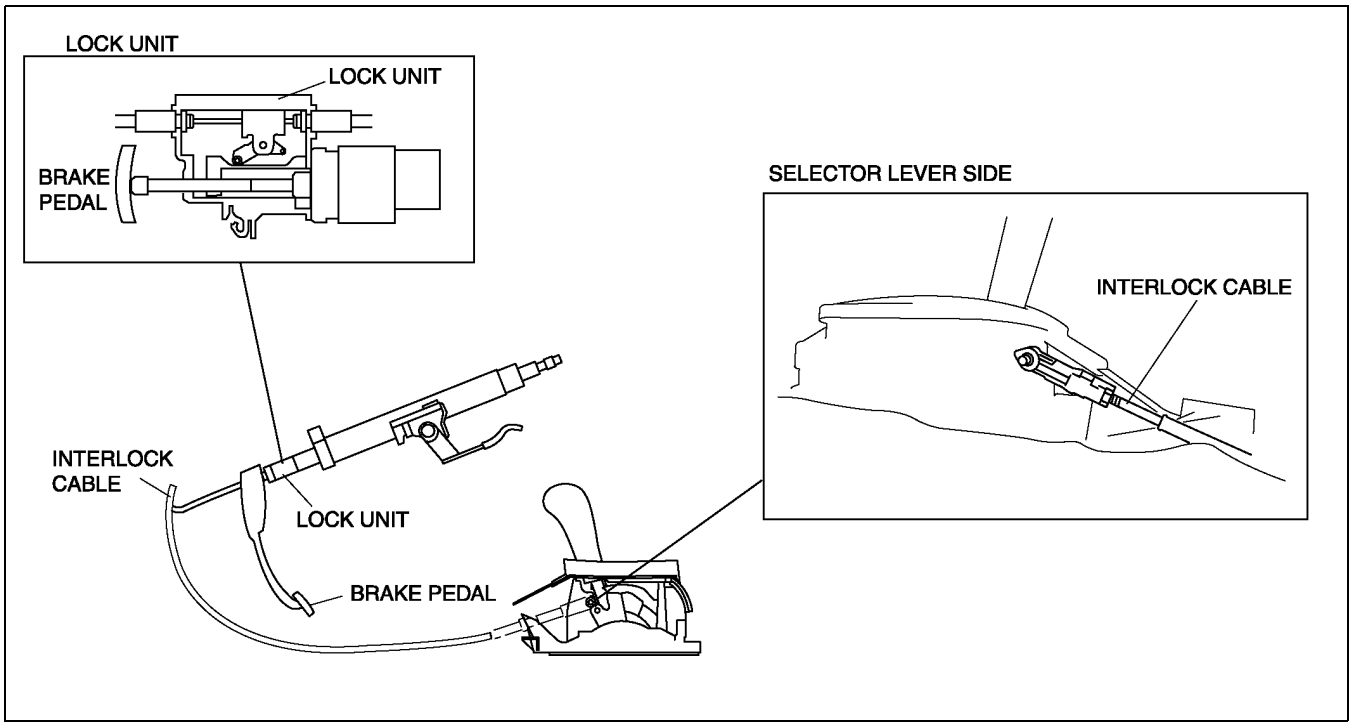

A6E5616T001

SHIFT-LOCK SYSTEM

A6E561646010T03

Outline

- To make operation smoother and to simplify internal construction, the shift lock system directly judges movement of the slider block with the slider pin.

Structure

- The shift-lock unit consists of the interlock cable, interlock cam, and lock unit.

Operation

The selector lever can be shifted from P position only when the following conditions are satisfied.

- The brake pedal is depressed.
- The selector lever push button is depressed.

When the brake pedal is not depressed, the slider pin is pressed into the position shown below by the brake pedal. Thus the slider block is inhibited from moving in direction A via the cam. In this condition, the interlock cable and interlock cam are locked, and the guide pin on the shift lever does not move out of the position. Thus the select lever cannot be shifted to other than P position.

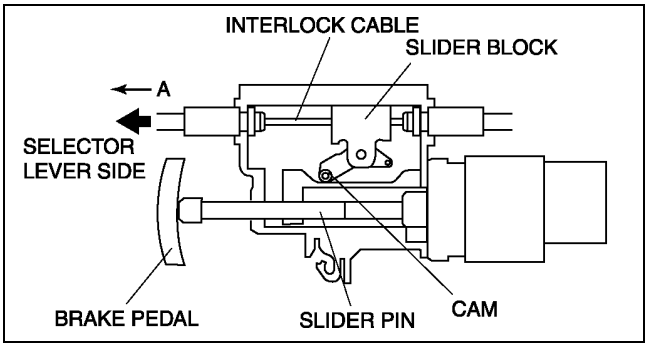

A6E5616T002

When the brake pedal is depressed, the slider pin moves freely in direction B. The slider block also starts to move freely. The interlock cable and interlock cam are not locked, thus shifting out of P position becomes possible.

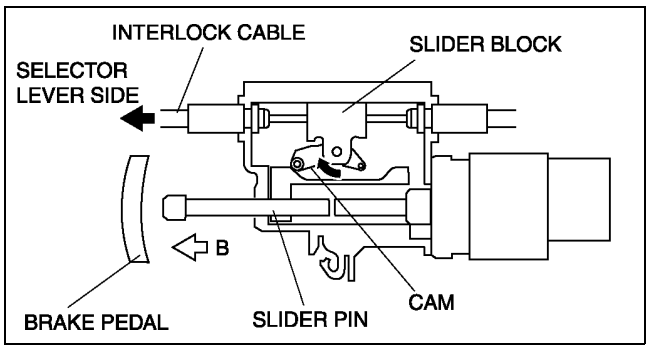

A6E5616T003

ON-BOARD DIAGNOSTIC

OUTLINE

A6E567001030T01

- The construction and operation of the on -board diagnostic system is essentially carried over from that of the previous 626 (GF) FN4A-EL models, except for the following. (See 626 626 Station Wagon Workshop Manual Supplement 1688-1*-00G).
  — DTCs, PID monitoring items, and simulation items have been changed.

DTC COMPARISON LISTS

A6E567001030T02

- The following codes are divided to improve serviceability.

Part Name	DTC	Mazda6 (GG)	Previous 626 (GF)
VSS circuit malfunction	P0500	Circuit malfunction	
TR switch	P0705	N/A	Circuit malfunction (short to ground)
	P0706	Circuit range/Performance	Circuit malfunction (open circuit)
	P0707	Circuit low input	N/A
	P0708	Circuit high input	N/A
TFT sensor	P0710	N/A	Circuit malfunction (open or short)
	P0711	Circuit range/performance (stuck)	
	P0712	Circuit malfunction (short to ground)	N/A
	P0713	Circuit malfunction (open circuit)	N/A
Input/turbine speed sensor	P0715	Circuit malfunction	
Incorrect 1GR ratio	P0731	Incorrect 1GR ratio	
Incorrect 2GR ratio	P0732	Incorrect 2GR ratio	
Incorrect 3GR ratio	P0733	Incorrect 3GR ratio	
Incorrect 4GR ratio	P0734	Incorrect 4GR ratio	
Torque converter	P0741	TCC system malfunction (stuck off)	
	P0742	TCC system malfunction (stuck on)	
Pressure control solenoid	P0745	Circuit malfunction	
Shift solenoid A	P0751	Circuit malfunction (stuck off)	
	P0752	Circuit malfunction (stuck on)	
	P0753	Circuit malfunction (electrical)	
Shift solenoid B	P0756	Circuit malfunction (stuck off)	
	P0757	Circuit malfunction (stuck on)	
	P0758	Circuit malfunction (electrical)	
Shift solenoid C	P0761	Circuit malfunction (stuck off)	
	P0762	Circuit malfunction (stuck on)	
	P0763	Circuit malfunction (electrical)	
Shift solenoid D	P0766	Circuit malfunction (stuck off)	
	P0767	Circuit malfunction (stuck on)	
	P0768	Circuit malfunction (electrical)	
Shift solenoid E	P0771	Circuit malfunction (stuck off)	
	P0772	Circuit malfunction (stuck on)	
	P0773	Circuit malfunction (electrical)	
Oil pressure switch	P0841	Circuit malfunction	N/A

ON-BOARD DIAGNOSTIC SYSTEM

A6E567001030T03

- The OBD system has the following functions:

a. Failure detection function: detects failure of the input/output devices and system components of the ATX.
b. Memory function: stores the DTC when a failure is detected.
c. Fail-safe function: fixes the output device function and input value of the sensors/switches to ensure minimum vehicle drivability when a failure is detected.
d. PID data monitoring function: monitors the input/output signals and calculated values of the PCM and sends the monitoring data to the WDS or equivalent.

DTC Table

DTC No.	Condition	MIL	HOLD indicator light flashes	DC	Monitor item	Memory function
P0500	VSS circuit malfunction (ATX)	ON	YES	2	CCM	×
P0706	Transaxle range (TR) switch circuit range/performance	ON	YES	2	CCM	×
P0707	Transaxle range (TR) switch circuit low input	ON	YES	1	CCM	×
P0708	Transaxle range (TR) switch circuit high input	ON	YES	2	CCM	×
P0711	Transaxle fluid temperature (TFT) sensor circuit range/ perfotmance	ON	NO	2	CCM	×
P0712	Transaxle fluid temperature (TFT) sensor circuit malfunction (short to ground)	ON	YES	1	CCM	×
P0713	Transaxle fluid temperature (TFT) sensor circuit malfunction (open circuit)	ON	YES	1	CCM	×
P0715	Input/turbine speed sensor circuit malfunction	ON	YES	1	CCM	×
P0731	Gear 1 incorrect (Incorrect Gear Ratio Detected)	OFF	YES	1	CCM	×
P0732	Gear 2 incorrect (Incorrect Gear Ratio Detected)	OFF	YES	1	CCM	×
P0733	Gear 3 incorrect (Incorrect Gear Ratio Detected)	OFF	YES	1	CCM	×
P0734	Gear 4 incorrect (Incorrect Gear Ratio Detected)	OFF	YES	1	CCM	×
P0741	Torque converter clutch (TCC) (stuck OFF)	OFF	YES	1	CCM	×
P0742	Torque converter clutch (TCC) (stuck ON)	OFF	YES	1	CCM	×
P0745	Pressure control solenoid malfunction	OFF	YES	1	CCM	×
P0751	Shift solenoid A stuck OFF	ON	YES	2	CCM	×
P0752	Shift solenoid A stuck ON	ON	YES	2	CCM	×
P0753	Shift solenoid A malfunction (electrical)	ON	YES	1	CCM	×
P0756	Shift solenoid B stuck OFF	ON	YES	2	CCM	×
P0757	Shift solenoid B stuck ON	ON	YES	2	CCM	×
P0758	Shift solenoid B malfunction (electrical)	ON	YES	1	CCM	×
P0761	Shift solenoid C stuck OFF	ON	YES	2	CCM	×
P0762	Shift solenoid C stuck ON	ON	YES	2	CCM	×
P0763	Shift solenoid C malfunction (electrical)	ON	YES	1	CCM	×
P0766	Shift solenoid D stuck OFF	ON	YES	2	CCM	×
P0767	Shift solenoid D stuck ON	ON	YES	2	CCM	×
P0768	Shift solenoid D malfunction (electrical)	ON	YES	1	CCM	×
P0771	Shift solenoid E stuck OFF	ON	YES	2	CCM	×
P0772	Shift solenoid E stuck ON	ON	YES	2	CCM	×
P0773	Shift solenoid E malfunction (electrical)	ON	YES	1	CCM	×
P0841	Oil pressure switch circuit malfunction	OFF	NO	2	CCM	×

Failure Detection Function

- The failure detection function compares input/output devices and system components operation to normal condition values pre-programmed in the PCM.
- If a failure is detected, the HOLD indicator light flashes to warn the driver of a malfunction in the powertrain system components or sensors/switches.
- The stored DTCs in the PCM are retrieved using the WDS or equivalent.
- The failures are detected according to the following detection concepts. Detection concepts of the TP sensor malfunction (P0122, P0123) are mentioned in the ENGINE section.

Vehicle speed sensor (VSS) circuit malfunction (P0500)

- No VSS signal is input to PCM terminal 3C when engine coolant temperature is **above 60 °C {140 °F}** and input/turbine speed sensor signal is **above 1,500 rpm** and selector lever position is at D, S or L range.

Transaxle range (TR) switch circuit range/performance (P0706)

- No TR signal (P, R, N, D, S or L range/position) Input to PCM terminal 1W when engine speed is **above 530 rpm** and vehicle speed is **above 20 km/h {12 mph}** and voltage at PCM terminal 1W is **0.5 V or above**.

Transaxle range (TR) switch circuit low input (P0707)

- Input voltage from TR switch to PCM terminal 1W **below 0.5 V** when engine speed is **above 530 rpm** and vehicle speed is **above 20 km/h {12 mph}**.

Transaxle range (TR) switch circuit high input (P0708)

- Input voltage from TR switch to PCM terminal 1W **above 4.79 V** when engine speed is **above 530 rpm** and vehicle speed is **above 20 km/h {12 mph}**.

Transaxle fluid temperature (TFT) sensor range/performance (stuck) (P0711)
- Input voltage from TFT sensor to PCM terminal 3D and 2H maintains **0.06 V** when **180 seconds** have passed after engine is started, vehicle is driven for **150 seconds or more** at vehicle speed **between 25 and 59 km/h {15 and 36 mph}**, then **60 km/h {37 mph} or more** for **100 seconds or more**.

Transaxle fluid temperature (TFT) sensor circuit malfunction (Open or short) (P0712)
- Input voltage from TFT sensor to PCM terminal 3D and 2H maintains **0.06 V** when vehicle speed is **above 20 km/h {12 mph}**.

Transaxle fluid temperature (TFT) sensor circuit malfunction (short to ground) (P0713)
- Input voltage from TFT sensor to PCM terminal 3D and 2H maintains **4.67 V** when vehicle speed is **above 20 km/h {12 mph}**.

Input/turbine speed sensor circuit malfunction (P0715)
- No input/turbine speed sensor signal to PCM terminals 3J and 3G when vehicle speed is **above 40 km/h {25 mph}** and selector lever position is at D, S, or L range.

Gear incorrect (P0731, P0732, P0733, P0734)
- If the RPM difference between the forward clutch drum revolution and differential gear case revolution exceeds or falls below the pre-programmed RPM difference in the PCM while driving in each gear, the OBD system judges “gear incorrect”.

Gear 1 incorrect (P0731)
- Revolution ratio of forward clutch drum revolution to differential gear case revolution is below 2.157 while in 1GR.

Gear 2 incorrect (P0732)
- Revolution ratio of forward clutch drum revolution to differential gear case revolution is below 1.249 or above 2.157 while in 2GR.

Gear 3 incorrect (P0733)
- Revolution ratio of forward clutch drum revolution to differential gear case revolution is below 0.863 or above 1.249 while in 3GR.

Gear 4 incorrect (P0734)
- Revolution ratio of forward clutch drum revolution to differential gear case revolution is below 0.6 or 1.249 or above while in 4GR.

Torque converter clutch (TCC) (Stuck off) (P0741)
- Difference between engine speed and turbine speed more than 100 rpm while in TCC operation.

Torque converter clutch (TCC) (Stuck on) (P0742)
- Difference between engine speed and turbine speed below 50 rpm while TCC no operation.

Pressure control solenoid valve malfunction (P0745)
- If voltage is stuck at **0V** or **B+** in pressure control solenoid control terminal 3Y of the PCM when the solenoid valve operates according to PCM calculation.

Shift solenoid A malfunction (Stuck off) (P0751)
- Revolution ratio of forward clutch drum revolution to differential gear case revolution within 0.91–1.09 and DTCs not output

Shift solenoid A malfunction (Stuck on) (P0752)
- Input/turbine speed sensor signal 188 rpm or above while vehicle stop

Shift solenoid A malfunction (electrical) (P0753)
- If voltage is stuck at **0V** or **B+** in shift solenoid A control terminal 4AB of the PCM when the solenoid valve operates according to PCM calculation.

Shift solenoid B malfunction (stuck off) (P0756)
- Revolution ratio of forward clutch drum revolution to differential gear case revolution below 2.157 and DTCs not output.

Shift solenoid B malfunction (stuck on) (P0757)
- Revolution ratio of forward clutch drum revolution to differential gear case revolution below 1.249 or more than 2.157 in driving in D range.

Shift solenoid B malfunction (electrical) (P0758)
- If voltage is stuck at **0V** or **B+** in shift solenoid B control terminal 4AC of the PCM when the solenoid valve operates according to PCM calculation.

Shift solenoid C malfunction (stuck off) (P0761)
- Revolution ratio of forward clutch drum revolution to differential gear case revolution below 2.157 in driving in D range.

Shift solenoid C malfunction (stuck on) (P0762)
- Revolution ratio of forward clutch drum revolution to differential gear case revolution below 0.863 or 1.249 or above in driving in D range.

Shift solenoid C malfunction (electrical) (P0763)
- If voltage is stuck at **0V** or **B+** in shift solenoid C control terminal 4Y of the PCM when the solenoid valve operates according to PCM calculation.

Shift solenoid D malfunction (stuck off) (P0766)
- Revolution ratio of forward clutch drum revolution to differential gear case revolution below 0.6 or 1.249 or above in driving in 4GR at D range.

Shift solenoid D malfunction (stuck on) (P0767)
- Revolution ratio of forward clutch drum revolution to differential gear case revolution below 0.863 or 1.249 or above in driving in D range.

Shift solenoid D malfunction (electrical) (P0768)
- If voltage is stuck at **0V** or **B+** in shift solenoid D valve control terminal 3S of the PCM when the solenoid valve operates according to PCM calculation.

Shift solenoid E malfunction (stuck off) (P0771)
- Difference between engine speed and turbine speed more than 100 rpm in driving in 4GR at D range TCC operation.

Shift solenoid E malfunction (stuck on) (P0772)
- Difference between engine speed and turbine speed below 50 rpm in driving in 4GR at D range TCC no operation.

Shift solenoid E malfunction (electrical) (P0773)
- If voltage is stuck at **0V** or **B+** in shift solenoid E control terminal 3P of the PCM when the solenoid valve operates according to PCM calculation.

Oil pressure switch circuit malfunction (P0841)
- No oil pressure switch signal input and revolution ratio of forward clutch drum revolution to differential gear case revolution is below 0.91 or above 3.08 while in 1, 2 or 3GR.
- Oil pressure switch signal input and revolution ratio of forward clutch drum revolution to differential gear case revolution is below 0.64 or above 0.82 while in 4GR.

K

FAIL-SAFE FUNCTION

A6E567001030T04

- In the fail-safe function, minimum vehicle drivability is obtained by changing the signals that are determined to be malfunctioning by the failure detection function to present values, and limiting the PCM control.

DTC No.	Definition	Fail-safe	TCC
P0122	TP circuit low input	Throttle valve opening angle is fixed at the time in order to determine shift	Inhibition
P0123	TP circuit high input		Inhibition
P0500	Vehicle speed sensor (VSS) circuit malfunction	–	Available
P0706	Transaxle range (TR) switch circuit range/ performance	Inhibits gear shifting and maximizes line pressure	Inhibition
P0707	Transaxle range (TR) switch circuit low input		
P0708	Transaxle range (TR) switch circuit high input		
P0711	Transaxle fluid temperature (TFT) sensor circuit range/performance (stuck)	–	Inhibition
P0712	Transaxle fluid temperature (TFT) sensor circuit malfunction (short to ground)	Sets temperature to cold condition	Inhibition
P0713	Transaxle fluid temperature (TFT) sensor circuit malfunction (Open circuit)		
P0715	Input/turbine speed sensor circuit malfunction	Inhibits 4GR	Inhibition
P0731	Gear 1 incorrect	Inhibits 1GR and maximizes line pressure	Available
P0732	Gear 2 incorrect	Inhibits 2GR and maximizes line pressure	Available
P0733	Gear 3 incorrect	–	Available
P0734	Gear 4 incorrect	Inhibits 4GR and maximizes line pressure	Available
P0741	Torque converter clutch (TCC) (stuck off)	Inhibits TCC and maximizes line pressure	Inhibition
P0742	Torque converter clutch (TCC) (stuck on)	Inhibits TCC and maximizes line pressure	Inhibition
P0745	Pressure control solenoid valve malfunction	–	Available
P0751	Shift solenoid A malfunction (Stuck off)	Inhibits 4GR and TCC and maximizes line pressure	Inhibition
P0752	Shift solenoid A malfunction (Stuck on)	Inhibits 1GR, 2GR, and 3GR and maximizes line pressure	Available
P0753	Shift solenoid A malfunction (Electrical)	Inhibits 4GR and TCC and maximizes line pressure	Inhibition
P0756	Shift solenoid B malfunction (Stuck off)	Inhibits 1GR and 4GR and maximizes line pressure	Available
P0757	Shift solenoid B malfunction (Stuck on)	Inhibits 2GR and 4GR and maximized line pressure	Available
P0758	Shift solenoid B malfunction (Electrical)	Inhibits 1GR and 4GR and maximizes line pressure	Available
P0761	Shift solenoid C malfunction (Stuck off)	Inhibits 1GR and 2GR and maximizes line pressure	Available

DTC No.	Definition	Fail-safe	TCC
P0762	Shift solenoid C malfunction (Stuck on)	Inhibits 3GR and 4GR and maximizes line pressure	Available
P0763	Shift solenoid C malfunction (Electrical)	Inhibits 1GR and 2GR and maximizes line pressure	Available
P0766	Shift solenoid D malfunction (Stuck off)	Inhibits 4GR and maximizes line pressure	Available
P0767	Shift solenoid D malfunction (Stuck on)	Inhibits 2GR, 4GR, and TCC and maximizes line pressure	Inhibition
P0768	Shift solenoid D malfunction (Electrical)	Inhibits 4GR and maximizes line pressure	Available
P0771	Shift solenoid E malfunction (Stuck off)	Inhibits TCC and maximized line pressure	Inhibition
P0772	Shift solenoid E malfunction (Stuck on)	Inhibits 1GR and maximizes line pressure	Available
P0773	Shift solenoid E malfunction (Electrical)	Inhibits TCC and maximizes line pressure	Inhibition
P0841	Oil pressure switch circuit malfunction	–	Available

PARAMETER IDENTIFICATION (PID) ACCESS

A6E567001030T05

- The PID mode allows access to certain data values, analog and digital input and output, calculated values, and system states information.

Monitor Item Table

Display on the tester	Definition	Unit/Condition		PCM terminal
GEAR	Gear commmanded by module	—		3P, 3S, 3Y, 4Y, 4AB, 4AC
LINEDES	Target line pressure	kPa	inHg	3V, 3Y
LPS	Pressure control solenoid control signal in PCM	%		3V, 3Y
OP SW B	Oil pressure switch	ON/OFF		3T
SSA/SS1	Shift solenoid A control signal in PCM	%		4AB
SSB/SS2	Shift solenoid B control signal in PCM	%		4AC
SSC/SS3	Shift solenoid C control signal in PCM	%		4Y
TCS	HOLD switch	ON/OFF		3Q
TFT	ATF temperature	°C	°F	3D
TFTV	ATF temperature signal voltage	V		3D
THOP	TP signal in PCM	%		2A
TP	TP signal voltage	V		2A
TR	TR switch signal	P/R/N/D/S/L		1W
TR SENS	TR switch signal voltage	V		1W
TSS	Input/turbine speed	rpm		3G, 3J
VPWR	Battery positive voltage	V		2Y, 2Z
VSS	Vehicle speed	km/h	mph	3C

Simulation Item Table

Simulation item	Applicable component	Operation	Operation		PCM terminal
			IG ON	Idle	
LPS	Pressure control solenoid control signal in PCM	%	×	×	3V, 3Y
SSA/SS1	Shift solenoid A control signal in PCM	%	×	—	4AB
SSB/SS2	Shift solenoid B control signal in PCM	%	×	—	4AC
SSC/SS3	Shift solenoid C control signal in PCM	%	×	—	4Y
SSD/ SS4	Shift solenoid D control signal in PCM	ON/OFF	×	—	3S
SSE/SS5	Shift solenoid E control signal in PCM	ON/OFF	×	—	3P

X : Available
— : Not applied

FRONT AND REAR AXLES

ABBREVIATIONS M-2
ABBREVIATIONS M-2
OUTLINE M-2
OUTLINE OF CONSTRUCTION M-2
FEATURES M-2
SPECIFICATIONS M-2
CROSS-SECTIONAL VIEW M-3
DRIVE SHAFT M-4
DRIVE SHAFT OUTLINE M-4
DRIVE SHAFT (LF ATX) CROSS-SECTIONAL VIEW M-4

ABBREVIATIONS

ABBREVIATIONS

A6E630100000T03

ATX	Automatic transaxle
MTX	Manual transaxle
4SD	4 door sedan
5HB	5 door hatchback

OUTLINE

OUTLINE OF CONSTRUCTION

A6E630201018T01

- The construction and operation of the front and rear axles is essentially carried over from that of the 626 (GF) model, except for the following features. (See 626 Training Manual 3303-10-97D.)

FEATURES

A6E630201018T04

Improved rigidity

- Large size rear hub spindle has been adopted.

Reduced Vibration

- Improved tripod joint has been adopted. (LF ATX model)

SPECIFICATIONS

A6E630201018T02

Item			Specification					
			Mazda6 (GG) (4SD, 5HB)				626 (GF) (4SD, 5HB)	
Engine			**L8**	**LF**		**L3**	**FS**	
Transaxle			**MTX**	**MTX**	**ATX**	**MTX**	**MTX**	**ATX**
Front axle	Bearing type		Angular ball bearing				Angular ball bearing	
Rear axle	Bearing type		Angular ball bearing				Angular ball bearing	
Drive shaft	Joint type	Wheel side	Bell joint				Bell joint	
		Differential side	Double offset joint		Tripod joint (With free ring)	Double offset joint	Double offset joint	Tripod joint
	Shaft diameter (mm {in})		24.5 {0.96}		24.0 {0.94}	24.5 {0.96}	26.0 {1.02}	22.7 {0.89}
Joint shaft	Shaft diameter (mm {in})		26.0 {1.02}				26.0 {1.02}	

CROSS-SECTIONAL VIEW

A6E630201018T03

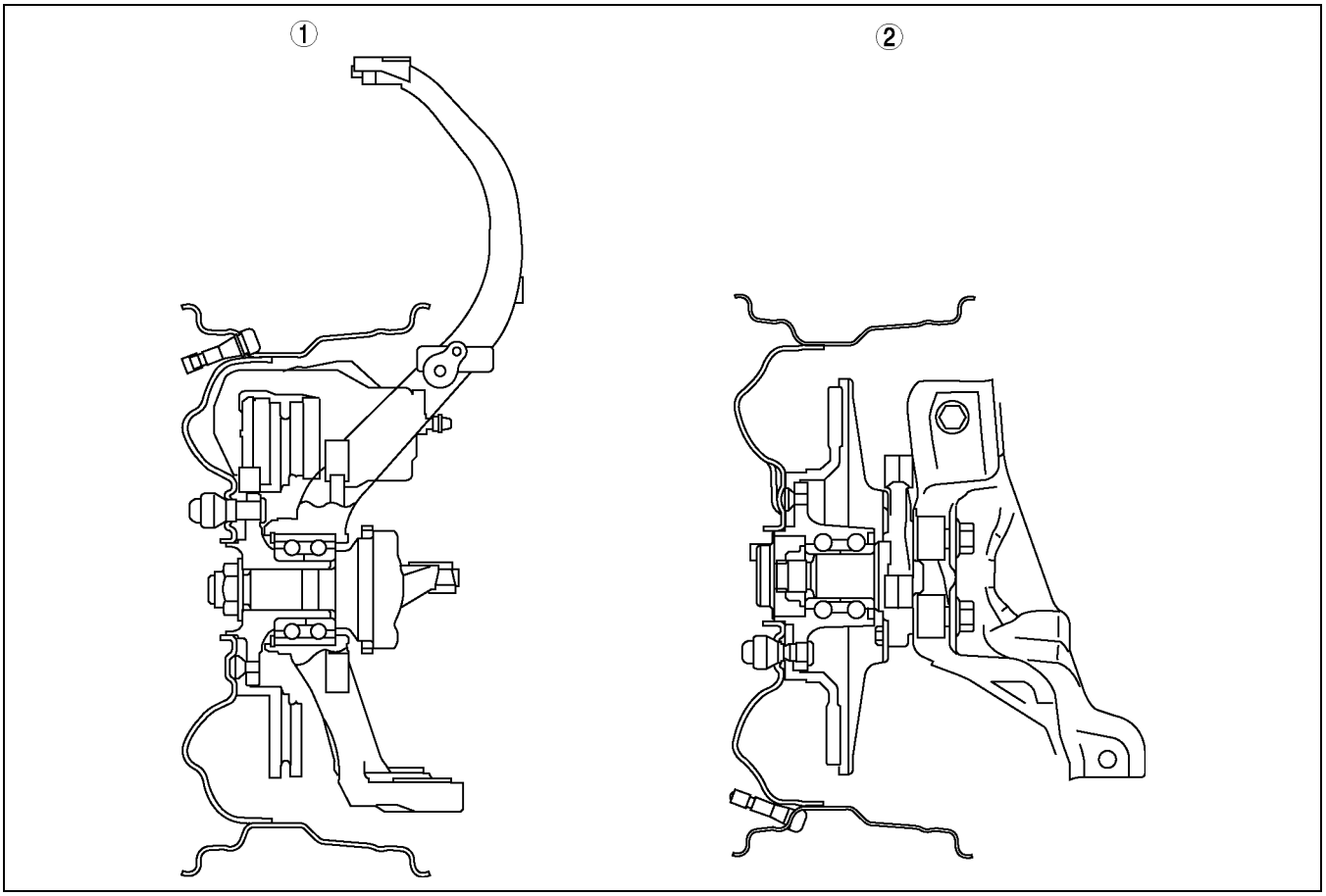

A6E6302T001

1	Front axle

2	Rear axle

DRIVE SHAFT

DRIVE SHAFT OUTLINE

A6E631625500T01

- Construction of the joint is essentially carried over from that of the previous tripod joint.
- A free ring has been adopted for the transaxle side joint. A contact region between the outer ring and free ring has been formed to reduce axial vibratory force when the joint slides (LF ATX model).

DRIVE SHAFT (LF ATX) CROSS-SECTIONAL VIEW

A6E631625500T02

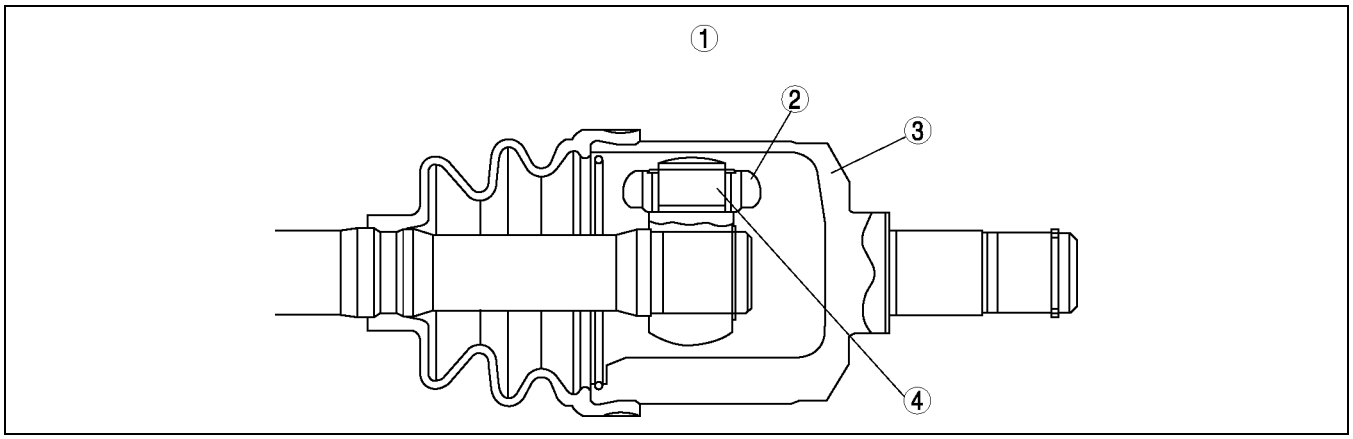

A6E6316T001

1	Transaxle side joint	3	Outer ring
2	Free ring	4	Tripod joint

STEERING SYSTEM

ABBREVIATIONS N-2
ABBREVIATIONS N-2
OUTLINE N-2
OUTLINE OF CONSTRUCTION N-2
FEATURES N-2
SPECIFICATIONS N-2
STRUCTURAL VIEW N-3
ENGINE SPEED SENSING POWER STEERING N-4
ENERGY ABSORBING SYSTEM N-4

ABBREVIATIONS

ABBREVIATIONS

A6E660100000T01

ATX	Automatic transaxle
MTX	Manual transaxle
4SD	4 door sedan
5HB	5 door hatchback

OUTLINE

OUTLINE OF CONSTRUCTION

A6E660201036T01

- The construction and operation of the steering system is essentially carried over from that of the 626 (GF) model, except for the following features. (See 626 Training Manual 3303-10-97D.)

FEATURES

A6E660201036T02

Improved Operability
- Tilt and telescope mechanism has been adopted.

Improved Safety in Collision
- Steering shaft with energy absorbing system has been adopted.

SPECIFICATIONS

A6E660201036T03

Item			Mazda6 (GG) (4SD, 5HB)	626 (GF) (4SD, 5HB)
Steering wheel	Outer diameter mm {in}		370 {14.6}	380 {15.0}
	Lock-to-lock (turns)		2.75	2.8
Steering gear and linkage	Type		Rack-and-pinion	Rack-and-pinion
	Rack stroke mm {in}		146.8—148.8 {5.78—5.85}	130—132 {5.11—5.19}
Steering column and shaft	Shaft type		Collapsible	Collapsible
	Joint type		2-cross joint	2-cross joint
	Amount of tilt mm {in}		45 {1.8}	40 {1.6}
	Amount of telescope mm {in}		50 {2.0}	–
Power steering system	Power assist type		Engine speed sensing	Engine speed sensing
	Power steering fluid	Type	M-III or equivalent (e.g. Dexron®II)	M-III or equivalent (e.g. Dexron®II)
		Fluid capacity* (approximate quantity) (L {US qt, Imp qt})	0.80 {0.85, 0.70} (MTX) 0.87 {0.92, 0.77} (ATX)	0.98 {1.04, 0.86}

* : When reservoir tank is at maximum volume

STRUCTURAL VIEW

A6E660201036T04

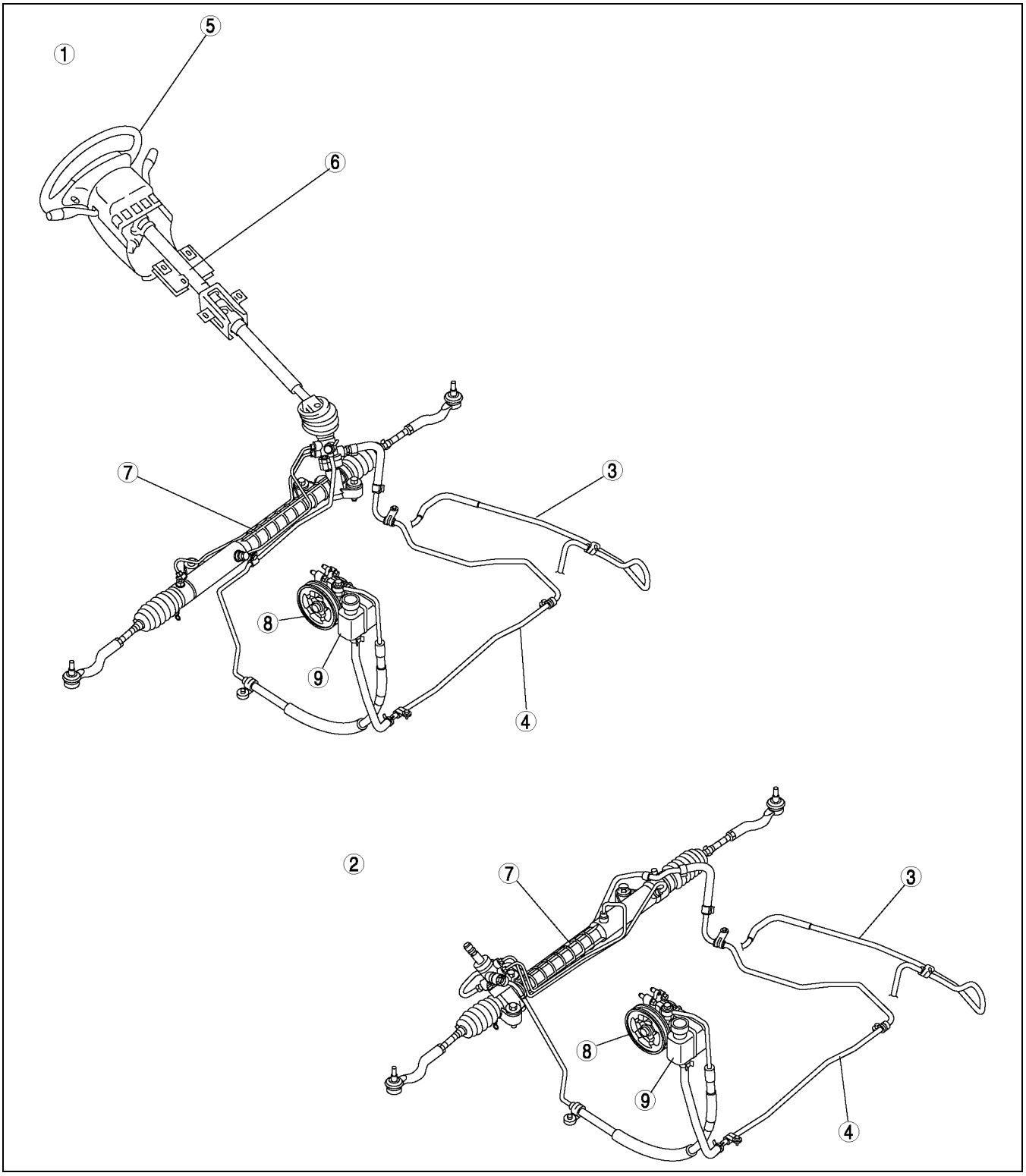

A6E6602T001

1	L.H.D.
2	R.H.D.
3	ATX
4	MTX
5	Steering wheel

6	Steering column and shaft
7	Steering gear
8	Power steering oil pump
9	Fluid reservoir

ENGINE SPEED SENSING POWER STEERING

ENERGY ABSORBING SYSTEM

A6E661432010T01

Structure and Operation

- The steering gear is joined to the steering shaft through the intermediate shaft.
- In a collision, the intermediate shaft is crushed as the steering gear moves rearward, thereby absorbing the impact.
- If the driver's body hits the steering wheel, the force applied to the steering wheel is transmitted through the inner shaft, outer column, and fixing bracket. As a result, the fixing bracket is disengaged from the dashboard, and the whole steering shaft will move forward.
  At this moment, the U-shaped plate, which is fixed to the dashboard at one end and held by the fixing bracket at the other, will deform and absorb the impact.

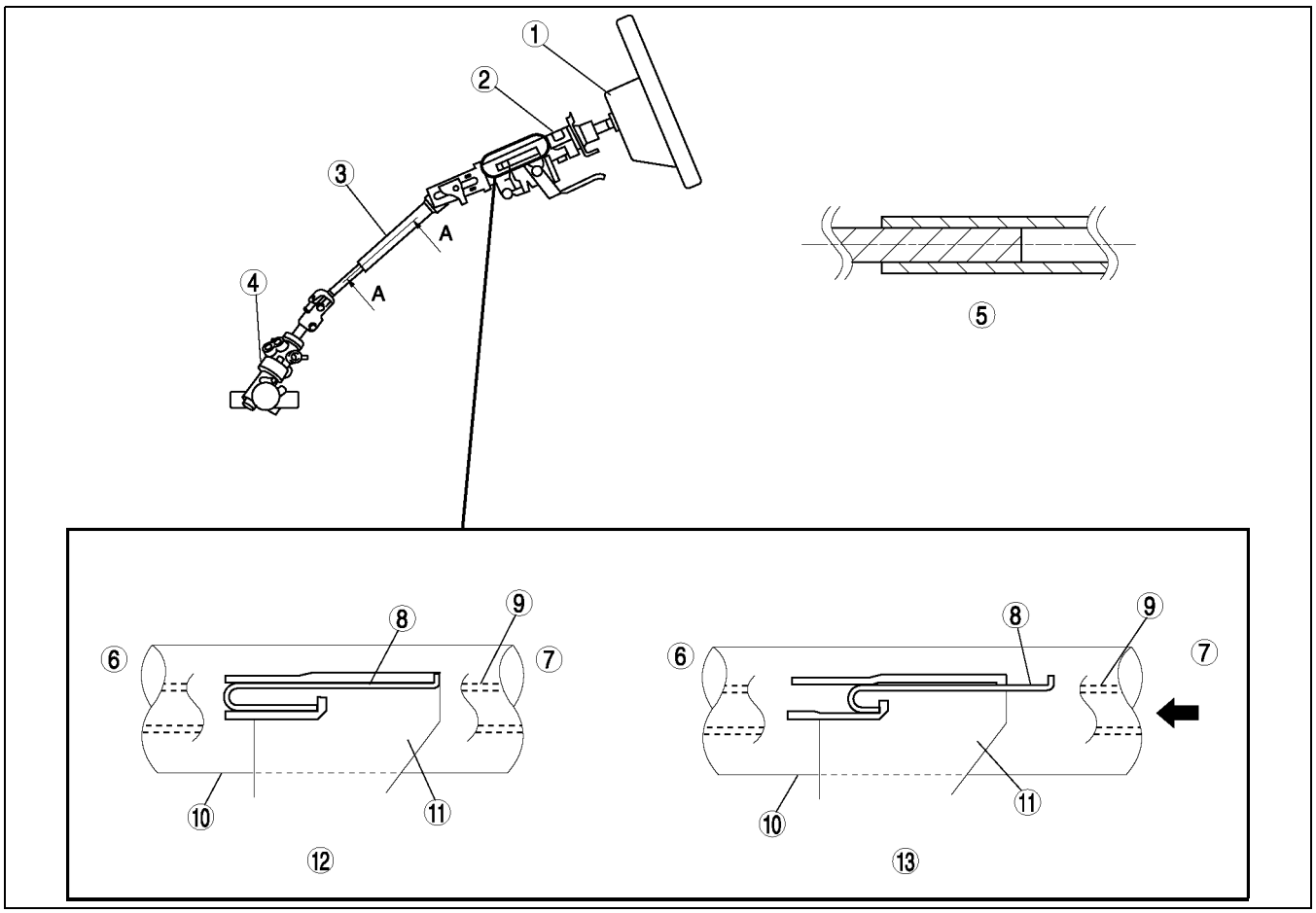

A6E6614T001

1	Steering wheel
2	Steering shaft
3	Intermediate shaft
4	Steering gear
5	Section A—A
6	Steering gear side
7	Steering wheel side

8	U-shaped plate
9	Inner shaft
10	Outer column
11	Fixing bracket
12	Normal condition
13	During collision

BRAKING SYSTEM

ABBREVIATIONS P-2
ABBREVIATIONS P-2
OUTLINE P-2
OUTLINE OF CONSTRUCTION P-2
FEATURES P-2
SPECIFICATIONS P-3
STRUCTURAL VIEW P-4
CONVENTIONAL BRAKE SYSTEM P-5
INTRUSION-MINIMIZING BRAKE PEDAL P-5
ABS/TCS P-7
OUTLINE P-7
DYNAMIC STABILITY CONTROL P-9
OUTLINE P-9
DSC INDICATOR LIGHT P-13
DSC OFF SWITCH, DSC OFF LIGHT P-14
COMBINE SENSOR P-15
DSC HU/CM P-16
BRAKE ASSIST CONTROL P-16
CONTROLLER AREA NETWORK (CAN) P-17
ON-BOARD DIAGNOSTIC P-18
OUTLINE P-18

ABBREVIATIONS

ABBREVIATIONS

A6E690100000T01

CAN	Controller area network
CM	Control module
DSC	Dynamic stability control
EBD	Electronic brakeforce distribution
HU	Hydraulic unit
IG	Ignition switch
LF	Left front
LR	Left rear
RF	Right front
RR	Right rear
4SD	4 door sedan
5HB	5 door hatchback

OUTLINE

OUTLINE OF CONSTRUCTION

A6E690201020T01

- The construction and operation of the conventional braking system is essentially carried over from that of the 626 (GF), except for the following features and specifications. (See 626 Training Manual 3303-10-97D.)
- The construction and operation of the ABS/TCS/DSC and on-board diagnosis system is essentially carried over from that of the current 323 (BJ), except for the following features. (See 323 Workshop Manual Supplement 1704-1*-00J.)

FEATURES

A6E690201020T02

Improved Braking Stability

- Large diameter front disc plate has been adopted.
- Large diameter rear disc plate has been adopted.

Improved Safety and Marketability

- DSC OFF switch has been adopted.
- Electrical brake assist has been adopted.
- Intrusion-minimizing brake pedal has been adopted.

Improved Serviceability

- Integrated DSC HU/CM has been adopted.
- Combine sensor has been adopted.
- CAN communication function has been adopted.
- TBS terminal of DLC has been eliminated.

SPECIFICATIONS

A6E690201020T03

Item			Specification	
			Mazda6 (GG) (4SD, 5HB)	626 (GF) (4SD, 5HB)
Brake pedal	Type		Suspended	
	Pedal lever ratio		2.7	3.7
	Max. stroke	(mm {in})	128.5 {5.06}	116 {4.57}
Master cylinder	Type		Tandem (with level sensor)	
	Cylinder diameter	(mm {in})	20.64 {0.813}	23.81 {0.937}
Front brake (disc)	Type		Ventilated disc	
	Cylinder bore	(mm {in})	57.15 {2.250}	
	Pad dimensions (area × thickness) (mm^2 {in^2} × mm {in})		L8: 4,220 {6.75} × 10.0 {0.39} LF, L3: 4,010 {6.42} × 12.5 {0.02}	4,800 {7.44} × 10.0 {0.39}
	Disc plate dimensions (outer diameter × thickness) (mm {in})		L8: 274 {10.8} × 24.0 {0.945} LF, L3: 283 {11.1} × 25.0 {0.984}	258 {10.2} × 24.0 {0.945}
Rear brake (disc)	Type		Solid disc	
	Cylinder bore	(mm {in})	34.93 {1.375}	
	Pad dimensions (area × thickness) (mm^2 {in^2} × mm {in})		2,820 {4.51} × 8.0 {0.31}	
	Disc plate dimensions (outer diameter × thickness) (mm {in})		280 {11.0} × 10.0 {0.39}	261 {10.3} × 10.0 {0.39}
Rear brake (drum)	Type		–	Leading-trailing
	Wheel cylinder inner diameter	(mm {in})	–	20.64 {0.813}
	Lining dimension (outer diameter × thickness)	(mm {in})	–	42.0 {1.65}× 229.4 {9.03} × 4.5 {0.18}
	Drum inner diameter	(mm {in})	–	228.6 {9.000}
	Shoe clearance adjustment		–	Automatic adjuster
Power brake unit	Type		Vacuum multiplier, single diaphragm	
	Diameter	(mm {in})	276 {10.9}	239 {9.41}
Braking force control device	Type		With ABS: EBD (Electronic Brakeforce Distribution) Without ABS: Dual proportioning valve	
Parking brake	Type		Mechanical two-rear-wheel control	
	Operation system		Center lever type	
Brake fluid	Type		European (L.H.D. U.K.) specs.: SAE J1703, FMVSS 116 DOT3 OR DOT4 GCC specs.: SAE J1703, FMVSS 116 DOT3	

Bold frames: New specifications

P

STRUCTURAL VIEW

A6E690201020T04

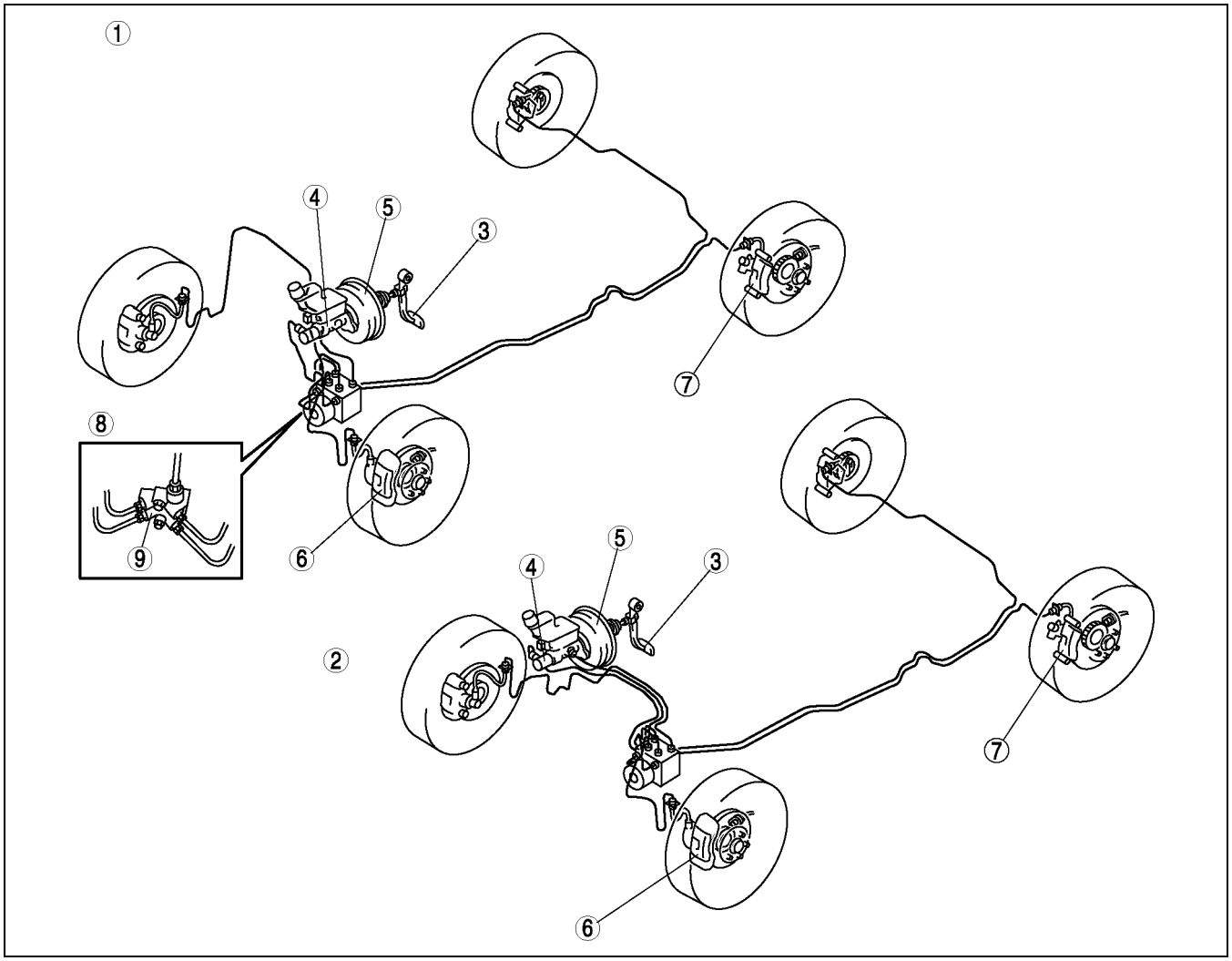

A6E6912T001

1	L.H.D.
2	R.H.D.
3	Brake pedal
4	Master cylinder
5	Power brake unit

6	Front brake (disc)
7	Rear brake (disc)
8	Without ABS
9	Dual proportioning valve

CONVENTIONAL BRAKE SYSTEM

INTRUSION-MINIMIZING BRAKE PEDAL

A6E691201020T01

Function

- An intrusion-minimizing brake pedal construction, which minimizes the amount of backward thrust of the pedal, has been adopted. It has been designed to soften the force of impact on the lower body of the driver.

Structure/operation

- During a frontal collision, the backward thrust of the engine and other parts forces brake pedal bracket A rearward and it separates from brake pedal bracket B.
- The rearward movement of the brake pedal arm, connected at the fulcrum of brake pedal bracket A, is prevented due to the stopper on brake pedal bracket B.
- Due to this, the rearward movement of the brake pedal arm is suppressed by the displacement of brake pedal bracket A.

Before collision

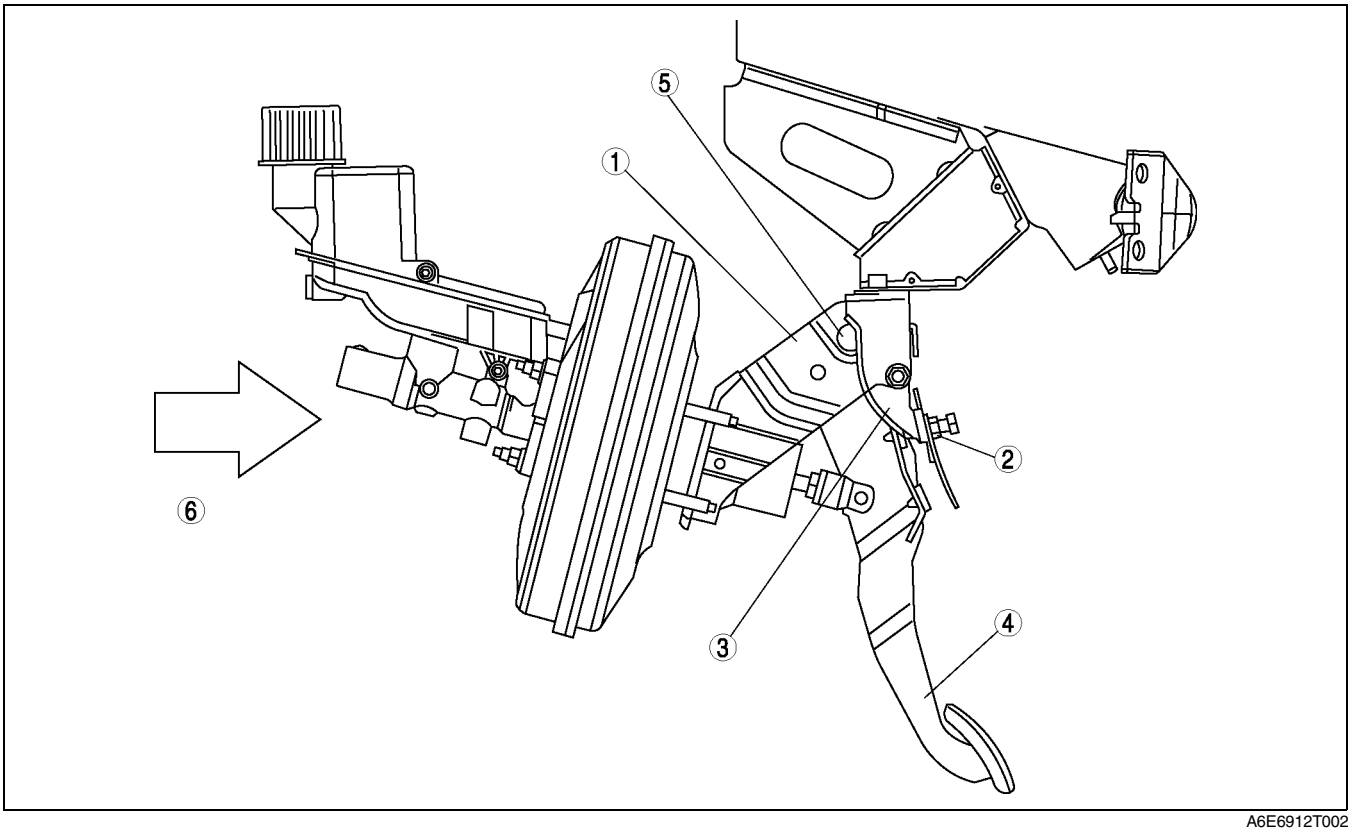

A6E6912T002

1	Brake pedal bracket A
2	Stopper
3	Brake pedal bracket B

4	Brake pedal arm
5	Fulcrum
6	Backward thrust

After collision

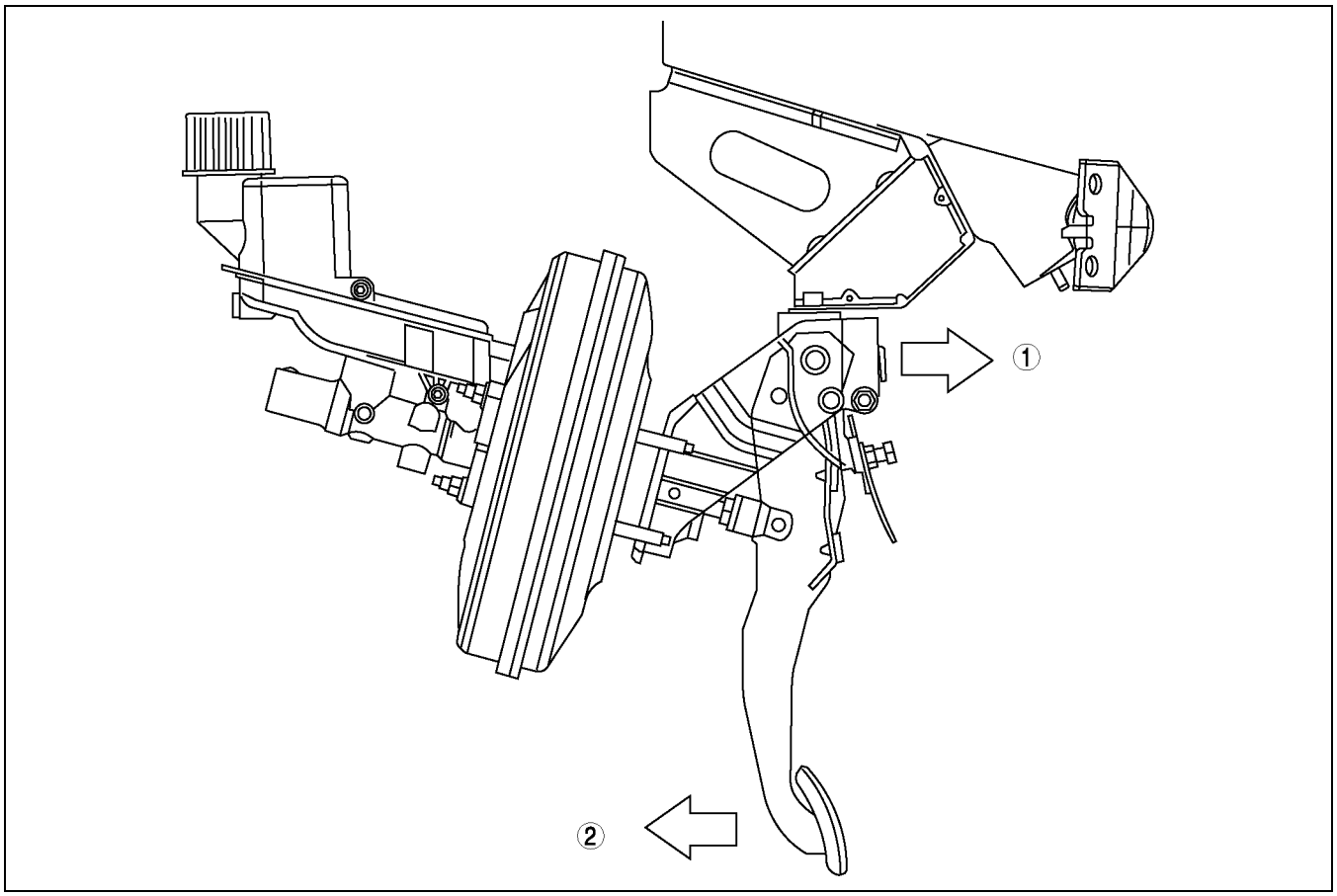

A6E6912T003

1	Backward thrust
2	Pivot away from the driver

ABS/TCS

OUTLINE

A6E692143000T01

- The hydraulic pressure control mechanism in the ABS (ABS/TCS) hydraulic unit (HU) and the system control strategy is essentially carried over from that of the current 323 (BJ), except for the following:
  — Input/output terminals of ABS (ABS/TCS) HU/CM have been changed.
  — CAN communication system has been adapted.
  — The ABS (ABS/TCS) HU/CM outputs a speed signal to the audio unit, wiper and washer switch, car-navigation unit, cruise actuator, and auto leveling control unit though a hard wire, and also outputs speed signal through CAN.
  — TCS indicator light is the same light as the DSC indicator light.

Structural View

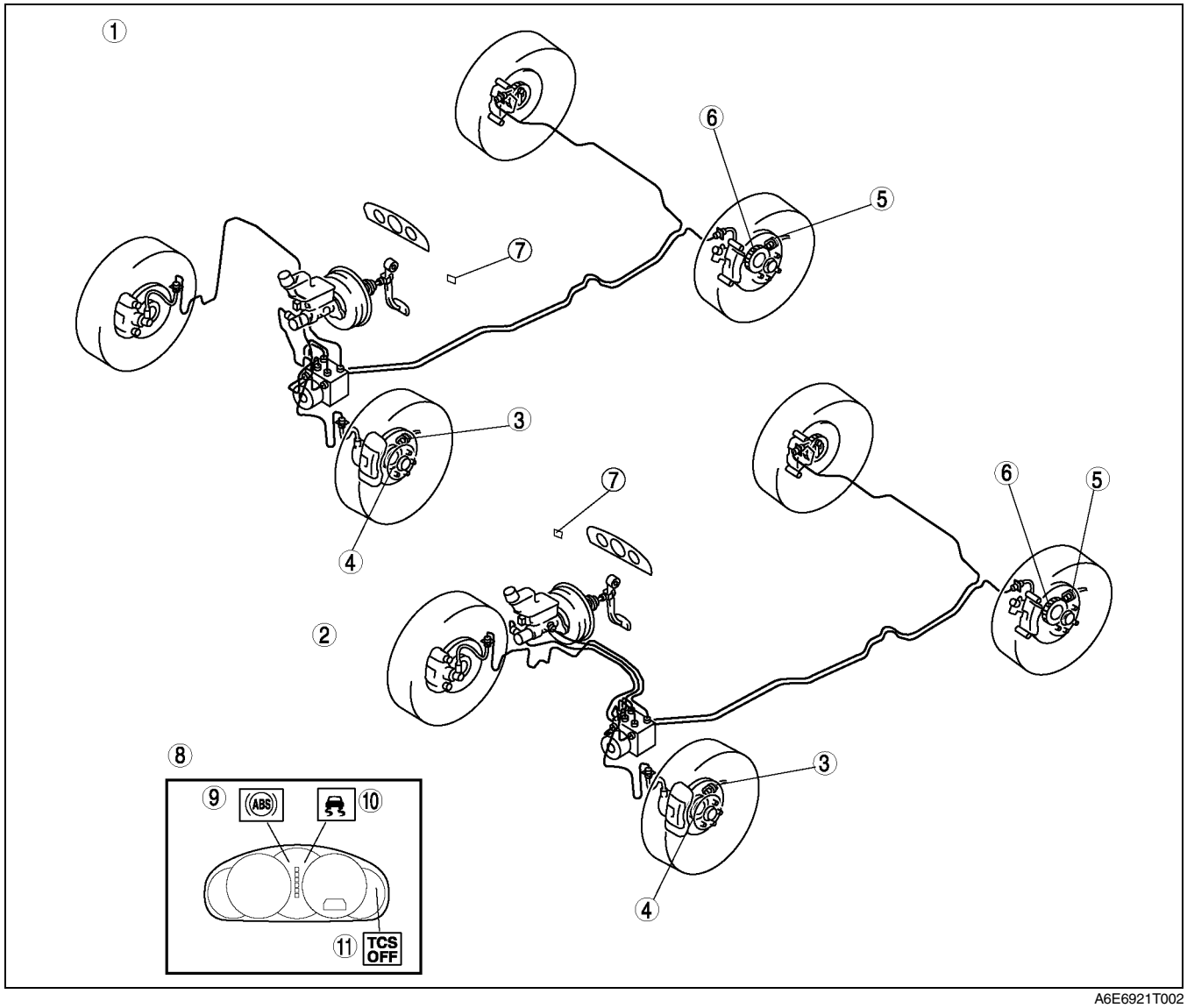

A6E6921T002

1	L.H.D.
2	R.H.D.
3	ABS wheel-speed sensor (front)
4	ABS sensor rotor (front)
5	ABS wheel-speed sensor (rear)
6	ABS sensor rotor (rear)

7	TCS OFF switch
8	Instrument cluster
9	ABS warning light
10	TCS indicator light
11	TCS OFF light

System Diagram

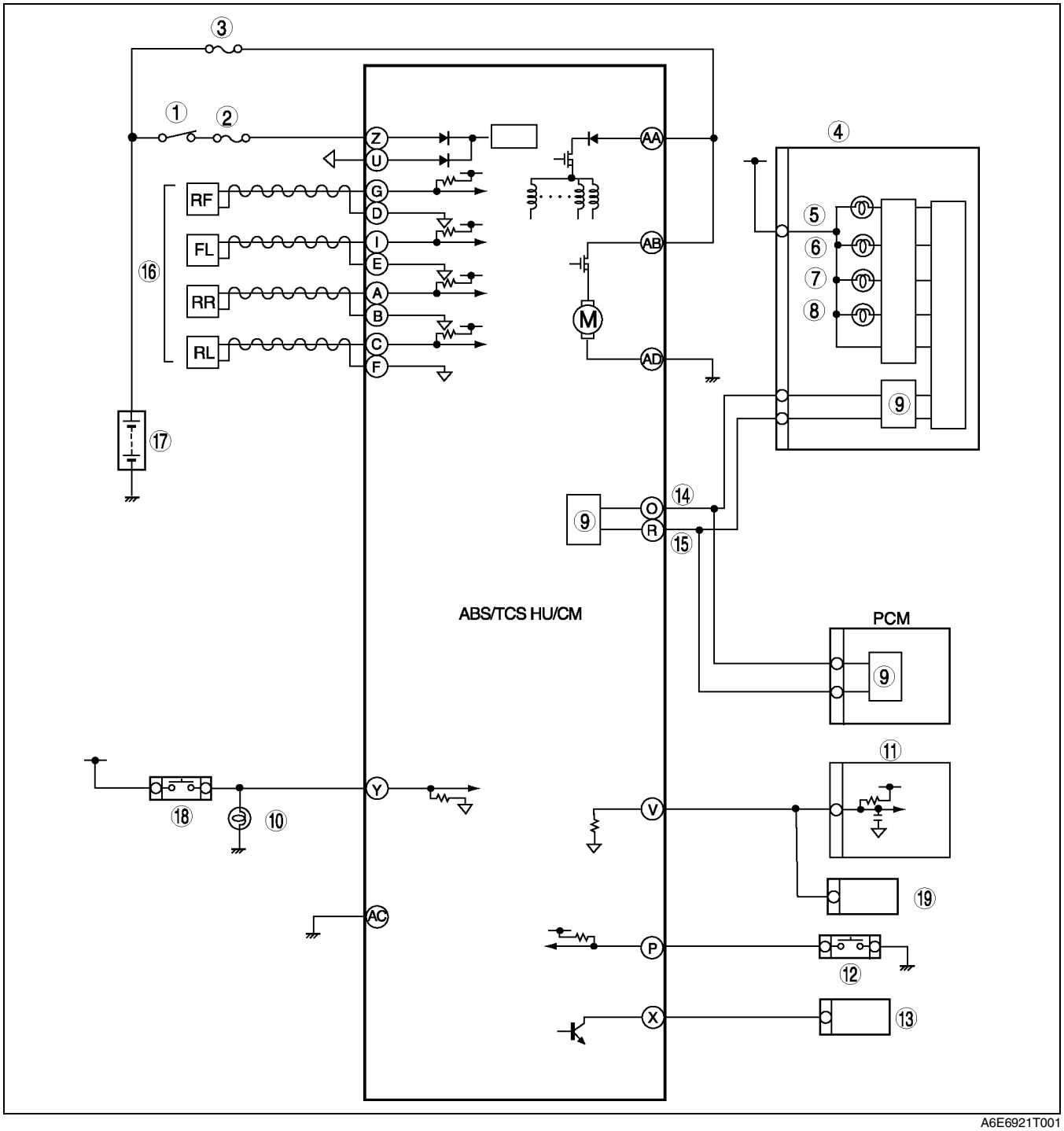

A6E6921T001

1	IG switch
2	SUS 15 A fuse
3	ABS 60 A fuse
4	Meter
5	ABS warning light
6	Brake system warning light
7	TCS OFF light
8	TCS indicator light (with TCS only)
9	CAN driver
10	Brake light

11	Cruise actuator
12	TCS OFF switch (with TCS only)
13	DLC-2
14	CAN-H
15	CAN-L
16	ABS Wheel-speed sensor
17	Battery
18	Brake switch
19	Audio unit, Wiper and washer switch, Car-navigation unit, Auto leveling control unit

DYNAMIC STABILITY CONTROL

OUTLINE

A6E692067650T01

- The hydraulic pressure control mechanism in the DSC HU/CM and the system control strategy is essentially carried over from that of the previous 323 (1704-1*-00J), except for the following:
  — DSC unit and hydraulic unit has been integrated to improve service ability.
  — Lateral-G sensor and yaw rate sensor has been integrated to improve serviceability.
  — Brake fluid pressure sensor has integrated to DSC HU/CM.
  — Input/output terminals of DSC HU/CM have been changed.
  — Electrical brake assist function has been adapted to improve safety.
  — DSC OFF switch has been adapted to cancel the DSC function.
  — The DSC HU/CM outputs a speed signal to the audio unit, wiper and washer switch, car-navigation unit, cruise actuator, and auto leveling control unit through a hard wire, and also outputs speed signal to the CAN line.
  — CAN communication system has been adapted.

Structural view

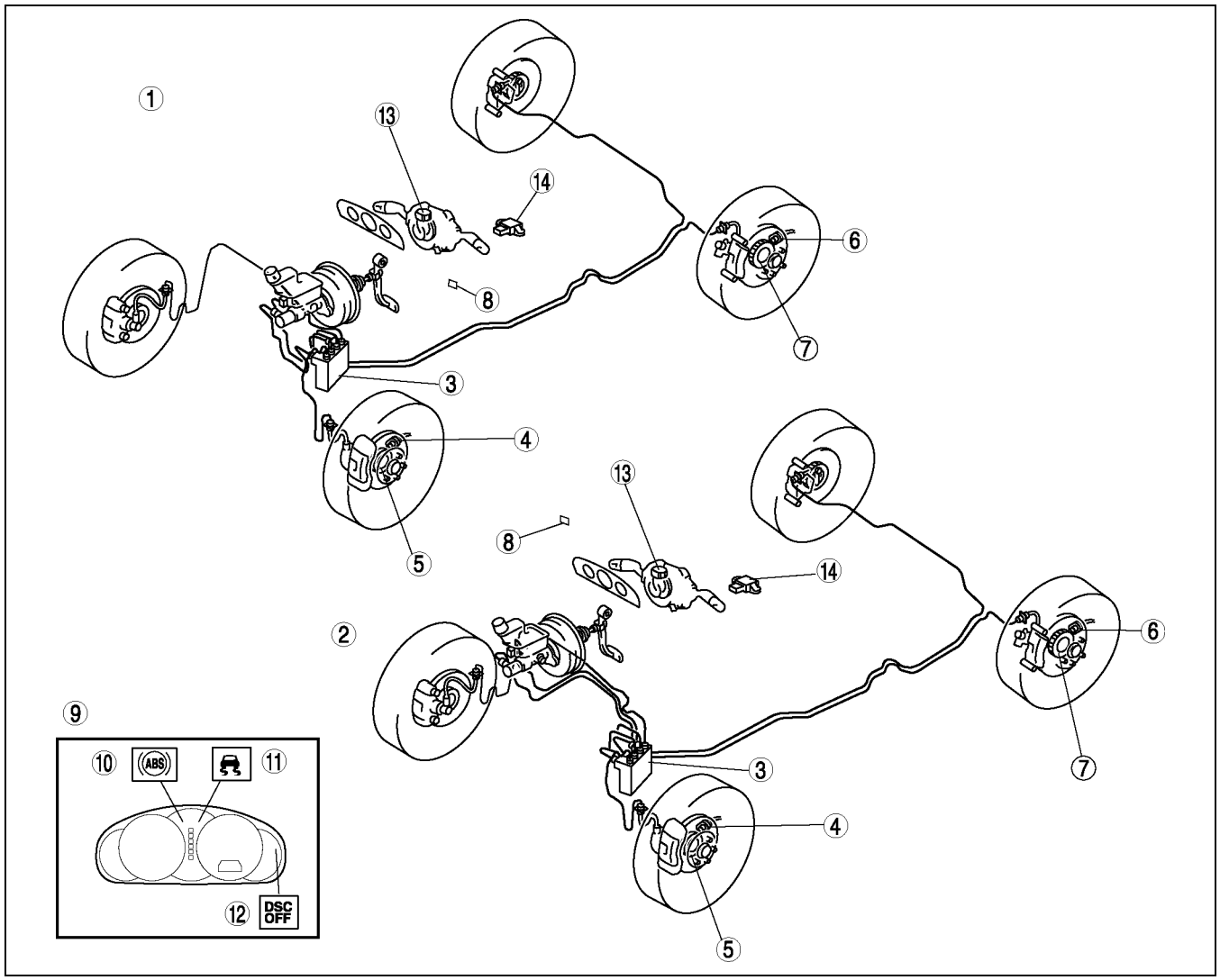

A6E6920T004

1	L.H.D.
2	R.H.D.
3	DSC HU/CM
4	Wheel-speed sensor (front)
5	Sensor rotor (front)
6	Wheel-speed sensor (rear)
7	Sensor rotor (rear)

8	DSC OFF switch
9	Instrument cluster
10	ABS warning light
11	DSC indicator light
12	DSC OFF light
13	Steering angle sensor
14	Combine sensor

Components and Functions

- The DSC system consists of the following components. Moreover, the function of common components in other systems as they are related to each DSC structural component is explained in terms of DSC system functions.

Part name	Function
DSC HU/CM	• Calculates input signal from each sensor, and controls brake fluid pressure applied to each wheel, and activates each DSC system function (ABS, EBD, TCS, and DSC). • Outputs control signal regulating the function of the TCS/DSC system and speed signal through CAN. • Outputs speed signal to the audio unit, wiper and washer switch, car-navigation unit, cruise actuator, and auto leveling control unit through a hard wire
	• Controls the diagnosis system and fail-safe function when an abnormality is detected in the DSC system.
PCM	• Controls engine torque based on the signal from DSC HU/CM. • Transmits engine conditions and tire information to DSC HU/CM through CAN.
DSC indicator light	• Notifies driver of DSC operation (Vehicle is in side slip situation). • Notifies driver of TCS operation (Drive-wheel slippage situation).
DSC OFF switch	• DSC system non-operation based on driver intention is transmitted to DSC HU/CM.
DSC OFF light	• Notifies driver of DSC system non-operation by DSC OFF switch. • Notifies driver of DSC system is forbidden by fail-safe function.
Wheel speed sensor	• Detects rotation state of each wheel and transmits signal to the DSC HU/CM.
Combine sensor	• Detects lateral-G force and yaw rate (vehicle cornering angle velocity) of vehicle and transmits to DSC HU/CM.
Steering angle sensor	• Detects steering angle and transmits to the DSC HU/CM.

System Diagram

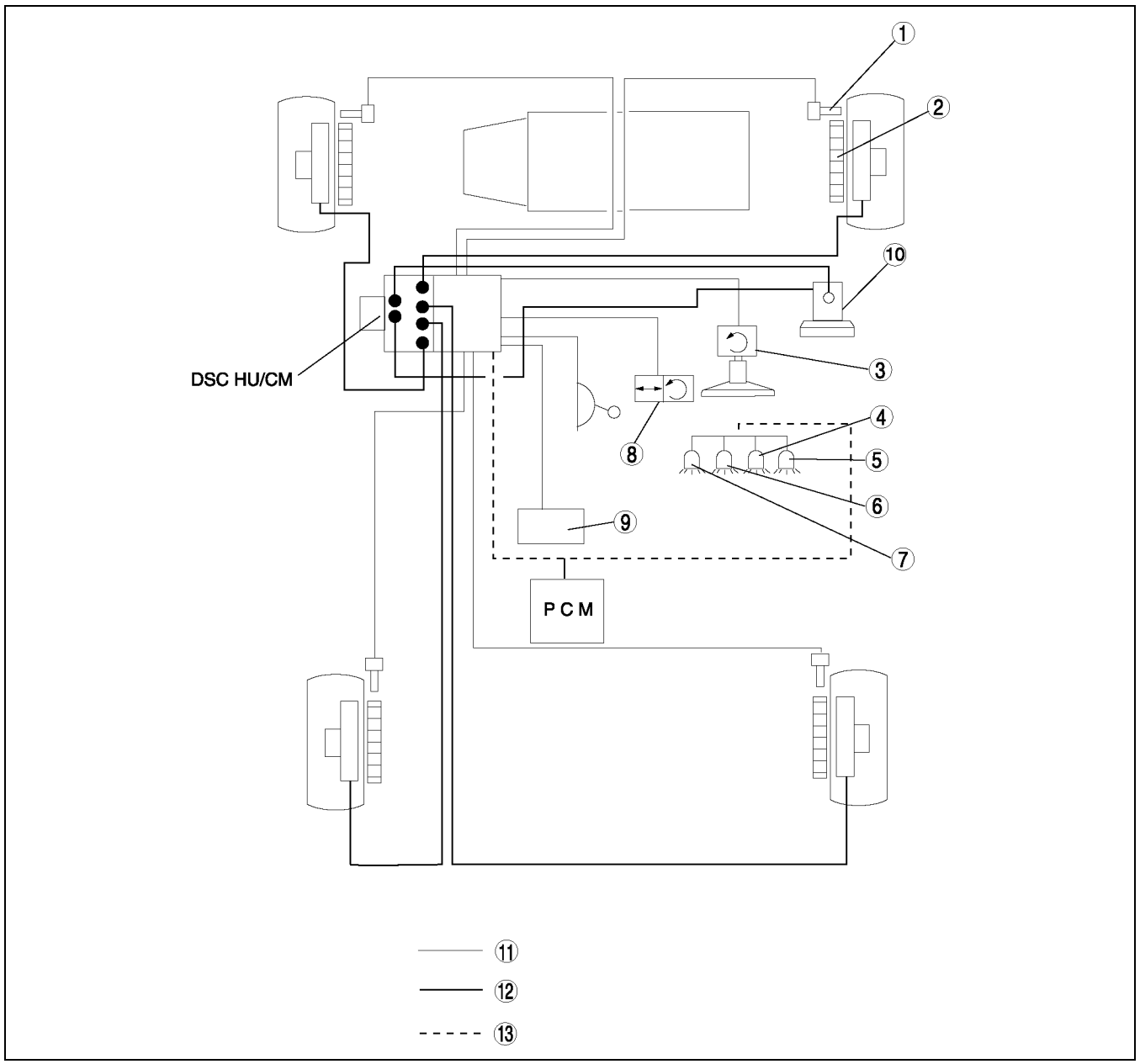

A6E6920T001

1	Wheel speed sensor
2	Sensor rotor
3	Steering angle sensor
4	DSC indicator light
5	DSC OFF light
6	BRAKE system warning light
7	ABS warning light

8	Combine sensor
9	Audio unit, Wiper and washer switch, Car-navigation unit, Cruise actuator, and Auto leveling control unit
10	Master cylinder
11	Electric signal
12	Brake fluid
13	CAN line

Wiring Diagram

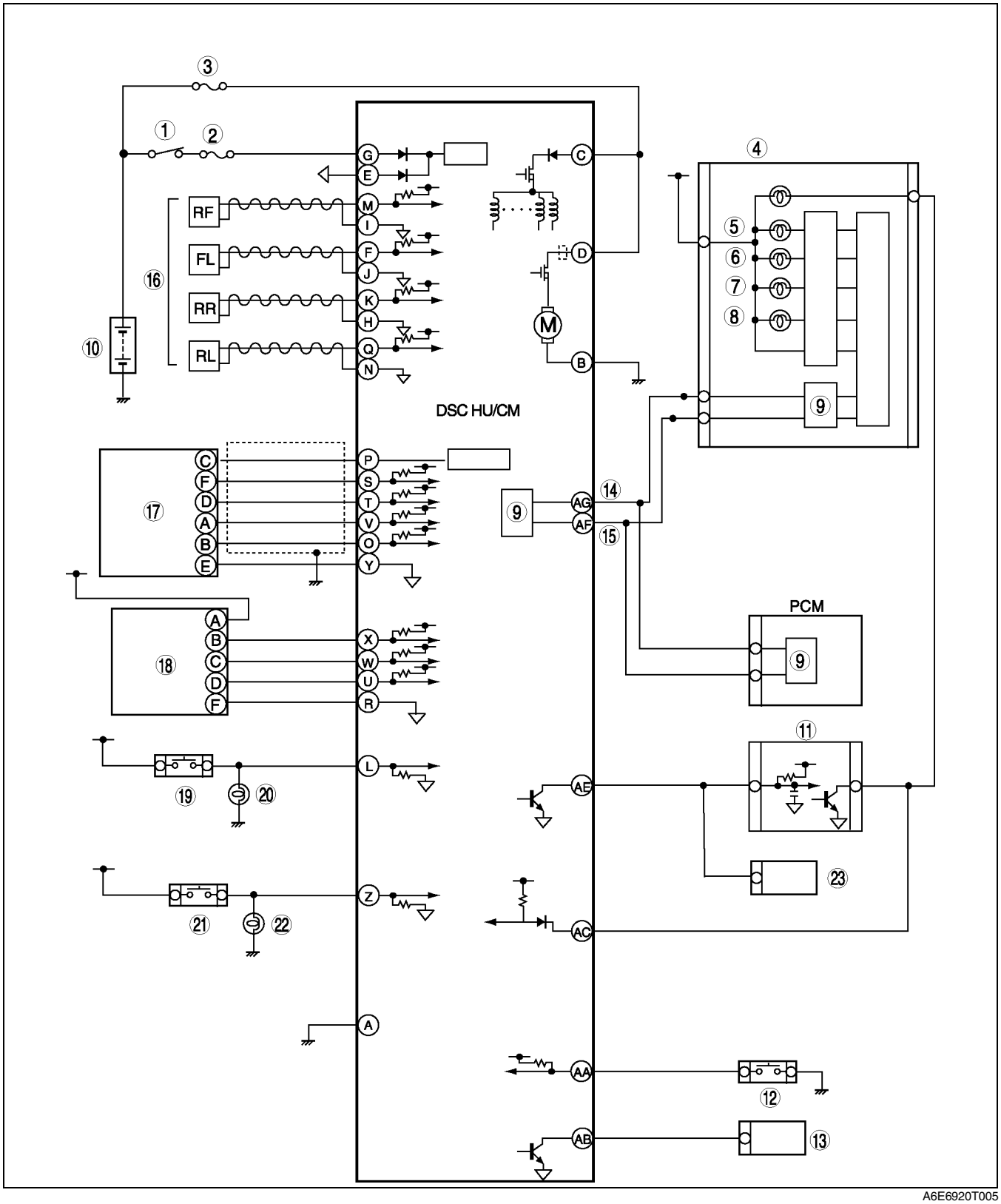

A6E6920T005

1	IG switch
2	SUS 15A fuse
3	ABS 60 A fuse
4	Meter
5	ABS warning light
6	Brake system warning light
7	DSC OFF light
8	DSC indicator light
9	CAN driver
10	Battery
11	Cruise actuator
12	DSC OFF switch

13	DLC-2
14	CAN-H
15	CAN-L
16	Wheel-speed sensor
17	Combine sensor
18	Steering angle sensor
19	Brake switch
20	Brake light
21	Back-up light switch (MTX only)
22	Back-up light
23	Audio unit, Wiper and washer switch, Car-navegation unit, Auto leveling control unit

DSC INDICATOR LIGHT

A6E692067650T02

Function

- The DSC indicator light is integrated in the instrument cluster and notifies the driver of DSC activation (vehicle is in side slip situation) or TCS activation (drive-wheel slippage situation) when DSC has not been canceled by pressing the DSC OFF switch.

Structure/Operation

- When the DSC and CAN system is normal, the DSC indicator light illuminates for **2.4 seconds** when the ignition switch is at ON, and goes out, checking the light function. When the system is malfunctioning, the DSC indicator light remains illuminated.
- When DSC and TCS are operating, the DSC indicator light operates as follows:

DSC indicator light operation table

Item	DSC indicator light
TCS, DSC non-operation	Not illuminated
TCS operation	Flashes (0.5 s intervals)
DSC operation	Flashes (0.5 s intervals)

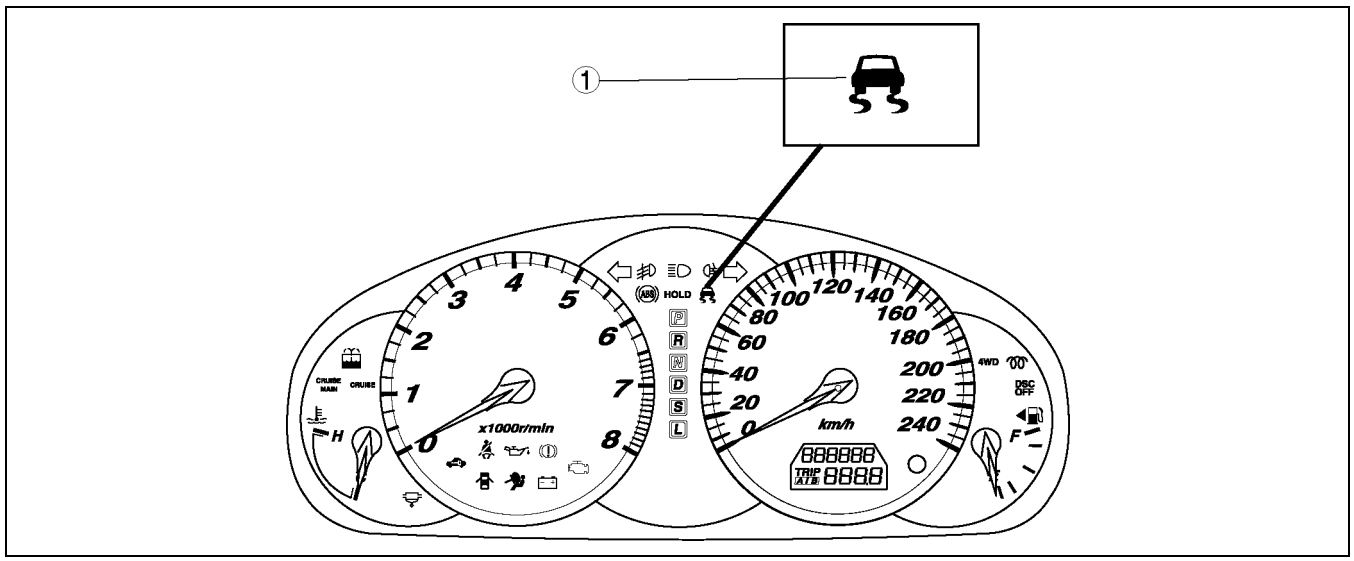

A6E6921T003

1	DSC indicator light

DSC OFF SWITCH, DSC OFF LIGHT

A6E692067650T15

Function

- The DSC OFF switch is installed in the instrument panel and cancels the DSC activation by pressing the DSC OFF switch.
- The DSC OFF light is integrated in the instrument cluster and notifies the driver of DSC activation is cancelled by pressing the DSC OFF switch.

Structure/Operation

- When the DSC and CAN system is normal, the DSC indicator light illuminates for **2.4 seconds** when the ignition switch is at ON, and goes out, checking the light function. When the system is malfunctioning, the DSC OFF indicator light remains illuminated.

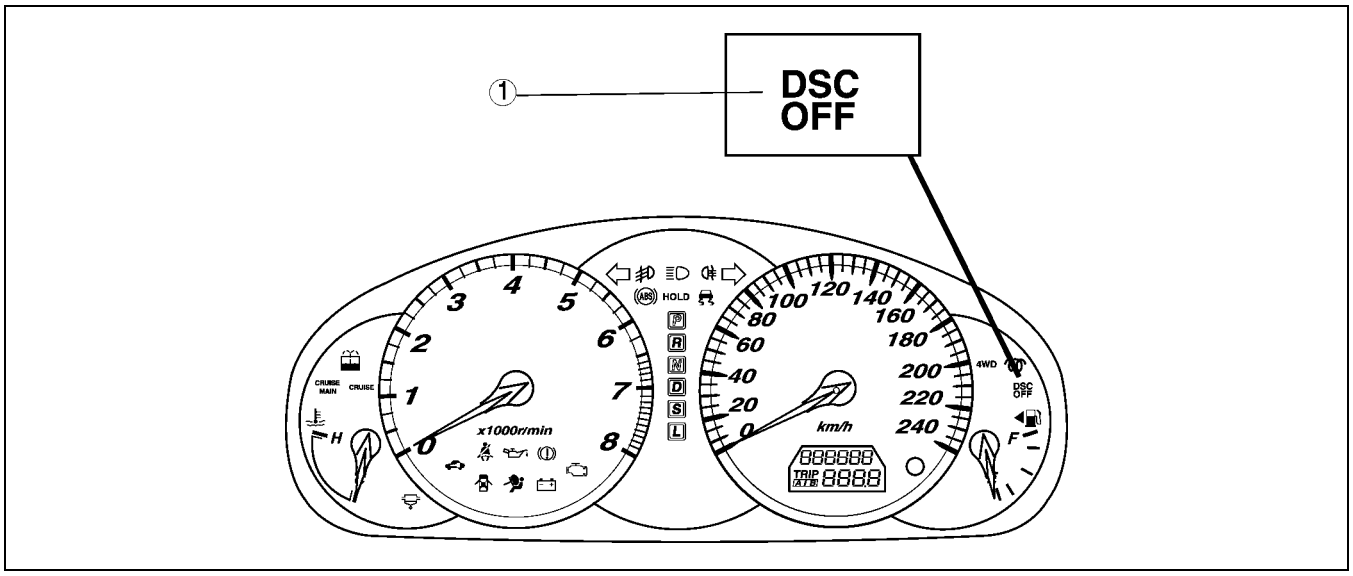

A6E6921T040

1	DSC OFF light

COMBINE SENSOR

A6E692067650T05

Function

- Yaw rate sensor and lateral-G sensor have been integrated to combine sensor.
- The combine sensor is installed on the left side of the parking brake lever (L.H.D.), or right side of the parking brake lever (R.H.D.) and detects vehicle yaw rate (vehicle cornering angle velocity) and lateral G, and transmits the signal to the DSC HU/CM.

Structure/Operation

- The output voltage characteristic for the combine sensor is 2.5 V when the vehicle is standing still, and changes accordingly as yaw rate and lateral-G is formed.
- Yaw rate is formed when the sensor detects a Coriolis force created by, and in proportion to, the rotation speed of a rotating tuning fork.
- Lateral G is formed when the sensor detects an inertial force created by, and in proportion to, a G force acting on a silicon detection component.

Note

- The Coriolis force: When an object on a rotating disc attempts to move toward the disc's center, force is produced at a right angle to the object's intended path of travel. This results in the object's direction of movement being unchanged from its original point of departure, and it not reaching the center. When looking at this effect from outside the disc, it appears as force deflecting the object away from the center. This appearance of force is called Coriolis force, and the object's actual direction of advance takes a straight course.

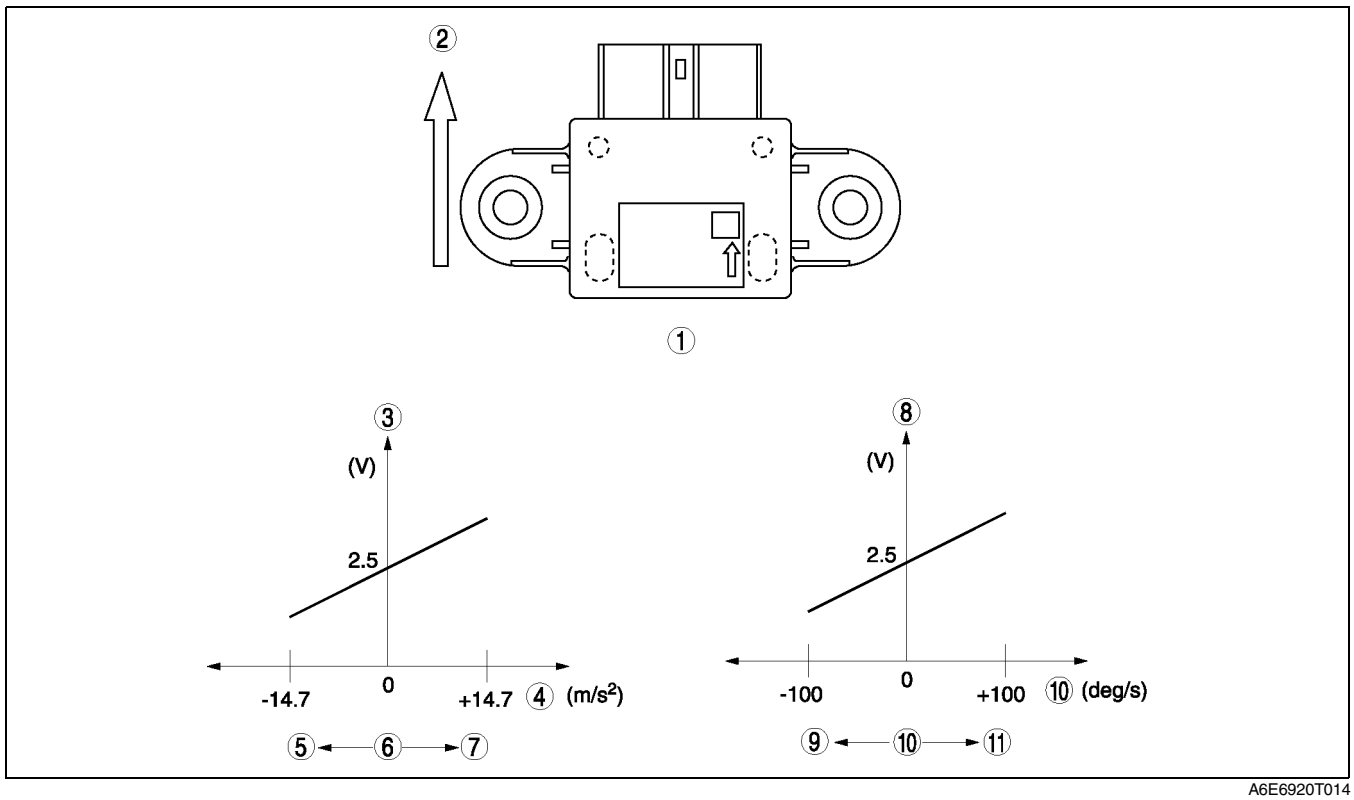

A6E6920T014

1	External view
2	Front of vehicle
3	Output voltage characteristic
4	Acceleration
5	Left cornering
6	Lateral-G

7	Right cornering
8	Output voltage characteristic
9	Left cornering
10	Yaw rate
11	Right cornering

DSC HU/CM

A6E692067650T09

Function

- The integrated DSC HU/CM, which is compact and lightweight, highly reliable has been adapted.
- The DSC HU/CM calculates the input signal of each sensor and controls each solenoid valve and the pump motor (ON/OFF), adjusts fluid pressure to the caliper pistons, and activates each function of the DSC system (ABS, Electronic Brakeforce Distribution (EBD), TCS, DSC and electrical brake assist).
- The construction and operation of DSC hydraulic pressure mechanism is the same as that of the current 323 (BJ), except for the operation of electric brake assist system. (See 323 Workshop Manual Supplement 1704-1*-00J.)
- The DSC HU/CM outputs the engine torque control signal and vehicle speed signal through CAN line.
- The DSC HU/CM also outputs vehicle speed signal through a hard wire.

Function

Function	Content
ABS control function	• When braking, maintains direction stability during braking operation, secures handling and provides shortened braking distance by control of brake fluid pressure.
EBD (Electronic brakeforce distribution) control	• Prevents rear-wheel lockup through optimum control of normal brake fluid pressure distribution to front and rear wheels in response to vehicle load, condition of road surface and vehicle speed.
TCS control	• Provides improved safety of start and acceleration performance by keeping traction within limits of road surface friction in response to road and vehicle speed conditions.
DSC control	• Inhibits strong tendency of the vehicle to oversteer or understeer, by controlling engine torque and braking on each wheel to provide assured vehicle stability.
Brake assist control	• Controls the fluid of the caliper piston during emergency braking, provides increased fluid pressure to each wheels.
Vehicle speed output	• The value of the calculation from the 4 wheel speed sensors is output as a speed signal to CAN line, and to wiper and washer switch, cruise actuator, audio unit, auto leveling control unit by a hard wire.
Diagnostic system	• Important parts in the DSC control have a self-detection function that, in the event of any abnormality, illuminate each warning light to inform the driver of an abnormality together with recording the DTC in the DSC unit. • When occurrence of an abnormality is judged by self-detection, cancels the controls so as not to cause loss of driving safety.

BRAKE ASSIST CONTROL

A6E692067650T16

Function

- During emergency braking, the DSC HU/CM increases brake fluid pressure by increasing the master cylinder pressure, and therefore lessens the burden on the driver and enables use of a large braking force.

Operation

- The DSC HU/CM uses the built-in brake fluid pressure sensor to monitor the rate at which the master cylinder pressure changes, and it initiates brake assist when it determines, from the pressure change, that emergency braking is occurring.
- The DSC HU/CM calculates the caliper piston pressure, increases fluid pressure in the master cylinder above the specified amount and, due to the change in master cylinder pressure, caliper piston pressure can be increased.
- In addition to normal brake fluid pressure, as each solenoid valve is switched, the pump motor is operated to rotate the pump which increases brake pressure force in the caliper pistons.
- Break assist is initiated at speeds of **17 km/h or above**, and is inhibited at speeds of **5 km/h or below**.

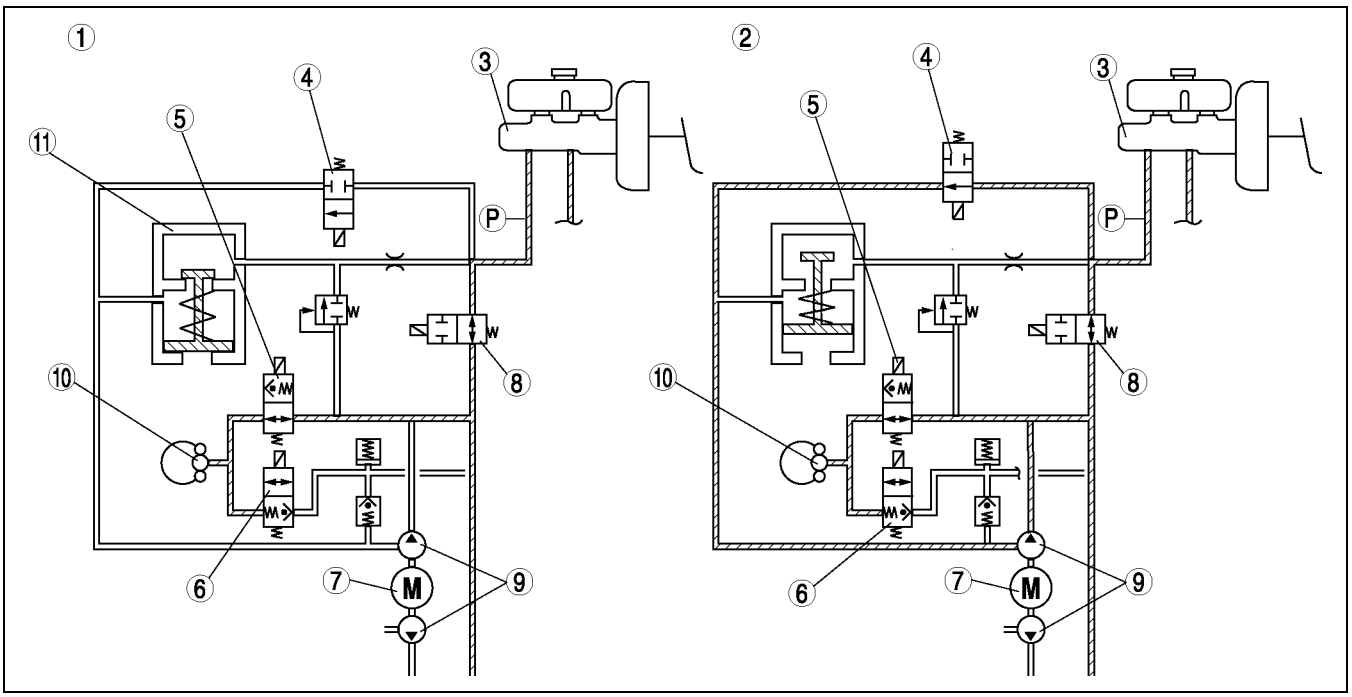

A6E6920T015

1	Normal brake mode
2	Brake assist reduction mode
3	Master cylinder
4	Stability control solenoid valve
5	Pressure-retention solenoid valve

6	Pressure-reduction solenoid valve
7	Pump motor
8	Traction switch solenoid valve
9	Pump
10	caliper piston

P

CONTROLLER AREA NETWORK (CAN)

A6E692067650T17

- ABS (ABS/TCS) or DSC HU/CM transmit/received the information through the CAN. For detail information of the CAN, see the “CONTROLLER AREA NETWORK.” (See T–5 OUTLINE.)

Transmit Information

- Travelled distance
- Wheel Speed
  - — Front Left
  - — Front right
  - — Rear left
  - — Rear right
- Brake system status
- Torque reduction request
- Brake system configuration

Received Information

- Engine conditions from PCM
- Engine speed from PCM
- Transmission/axle type from PCM
- Tire circumference from PCM
- Gear/change lever position from PCM
- Brake system warning light condition (brake fluid level) from instrument cluster
- ABS configuration from instrument cluster

ON-BOARD DIAGNOSTIC

OUTLINE

A6E697067650T03

- The operation of the on-board diagnostic system for ABS (ABS/TCS) or DSC is essentially carried over from that of the previous 323 (BJ) model except for the following. (See Mazda 323 Workshop Manual Supplement 1704-1*-99H.)
  - — Changed of DTC code, PID data monitor function, and active command function
  - — Eliminated TBS terminal of DLC
- Using the WDS or equivalent with the ABS (ABS/TCS) or DSC HU/CM, allows for a 4-digit DTC display function, a PID/DATA monitor function, and an active command modes function, and thus improves serviceability.

Block diagram

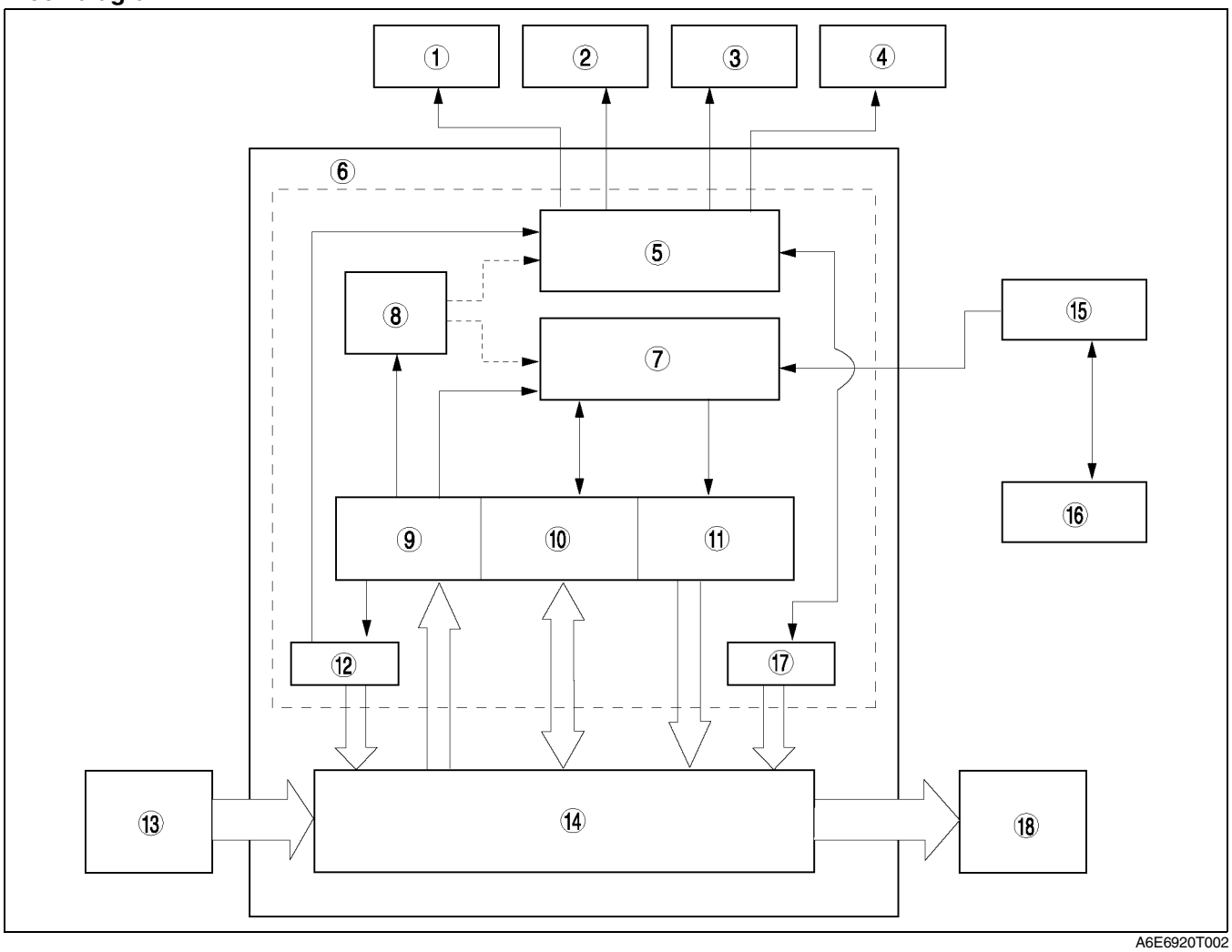

A6E6920T002

1	TCS (DSC) indicator light
2	TCS (DSC) OFF light
3	ABS warning light
4	Brake system warning light
5	Malfunction indication function
6	On-board diagnosis function
7	Serial communication
8	Memory function
9	Malfunction detection function

10	Data monitor function
11	Active command function
12	Fail-safe function
13	Input devices
14	Normal control area
15	Data link connector-2
16	WDS or equivalent
17	Hydraulic inspection function
18	Output devices

Fail-safe Function

- If a failure is detected in the self-diagnostic function, the fail-safe illuminates the ABS warning light, BRAKE system warning light, DSC indicator light, and/or TCS (DSC) OFF light to notify the driver. At the same time, the ABS (ABS/TCS) or DSC HU/CM controls the ABS, EBD, TCS, DSC and brake assist. The fail-safe function ensures normal braking even when ABS, EBD, TCS, DSC and/or brake assist control stops, as shown in the figure.

Caution

- **In the event that EBD control stops, the rear wheels may lock before the front wheels, causing the vehicle to skid. Inspect the system immediately if EBD control stops.**

Fail-safe function table

Malfunction location	DTC	Fail-safe function								
		Warning light illumination condition				Control condition				
	WDS or equivalent	ABS warning light	BRAKE system warning light (when parking brake is released)	DSC(TCS) indicator light	DSC (TCS) OFF light	ABS control	EBD control	TCS control	DSC control	Brake assist control
Brake fluid pressure sensor	C1953	Not illuminated	Not illuminated	Illuminated	Not illuminated	Available	Available	Available	Stop	Stop
	C1954									
Combine sensor	C1280	Not illuminated	Not illuminated	Illuminated	Not illuminated	Available	Available	Available	Stop	Available
	C1730									
	C1951									
	C1952									
	C1959									
Wheel-speed sensor	C1145	Illuminated *1	Not illuminated *1, 2	Illuminated *1	Illuminated *1	Stop	Available *3	Stop	Stop	Stop
	C1155									
	C1165									
	C1175									
Wheel-speed sensor/sensor rotor	C1148									
	C1158									
	C1168									
	C1178									
	C1233									
	C1234									
	C1235									
	C1236									
Engine control system, engine speed signal line	C1119	Not illuminated	Not illuminated	Illuminated	Not iluminated *22	Available	Available	Stop	Stop	Available
								Available	Available	
									Stop *23	
								Stop *24	Stop *25	
Engine coolant temperature	U2021	Not illuminated	Not illuminated	Not illuminated	Illuminated	Available	Available	Stop *5	Stop	Available

P

Malfunction location	DTC	Fail-safe function								
		Warning light illumination condition				Control condition				
	WDS or equivalent	ABS warning light	BRAKE system warning light (when parking brake is released)	DSC (TCS) indicator light	DSC (TCS) OFF light	ABS control	EBD control	TCS control	DSC control	Brake assist control
Solenoid valve	C1194 C1198 C1210 C1214 C1242 C1246 C1250 C1254 C1400 C1410 C1957 C1958	Illuminated *6, 7	Illuminated *7, 8	Illuminated *6	Not illuminated	Stop *9	Stop *10	Stop *14	Stop	Stop
DSC HU/CM (pump)	C1140	Illuminated	Not illuminated	Illuminated *22	Not illuminated	Stop	Available	Stop *14	Stop	Stop
Solenoid valve, ABS motor or ABS wheel-speed sensor/ sensor rotor	C1510 C1511 C1512 C1513		Not illuminated *2		Illuminated		Available *3	Stop *15		
DSC control	C1507 C1508	Not illuminated	Not illuminated			Available	Available			
Fail-safe relay	C1186	Illuminated	Illuminated	Not illuminated	Illuminated	Stop	Stop	Stop *14	Stop	Stop
	C1266		Not illuminated				Available			
ABS motor and/or ABS motor relay	C1095 C1096	Illuminated *6	Not illuminated	Illuminated *6	Not illuminated	Stop	Available	Stop *14	Stop	Stop
ABS (ABS) or DSC HU/CM	B1342	Illuminated *12, 16	Illuminated *12, 16	Illuminated *12, 18	Illuminated *18	Stop *13, 17	Stop *13, 17	Stop *17	Stop	Stop *13, 17
Power supply system	B1318	Illuminated	Illuminated	Illuminated	Illuminated	Available	Available	Available	Available	Available
DSC unit mismatched installation	C1414	Illuminated *20	Not illuminated	Illuminated *20	Illuminated	Stop *21	Available	Stop	Stop	Stop
Steering angle sensor	C1955 C1956	Not illuminated	Not illuminated	Not illuminated	Illuminated	Available	Available	Available	Stop	Available
Brake fluid level sensor	C1125	Not illuminated	Not illuminated	Illuminated	Not illuminated	Available	Available	Stop *14	Stop	Stop
Reverse signal	B1627	Not illuminated	Not illuminated	Illuminated	Not illuminated	Available	Available	Available	Stop	Available
Brake switch	B1483 B1484 B1486	Not illuminated	Not illuminated	Illuminated	Not illuminated	Available	Available	Available	Available	Stop
Module configuration	B2477	Not illuminated	Not illuminated	Illuminated	Illuminated	Available	Available	Stop	Stop	Stop
CAN communication	U1900	Not illuminated	Not illuminated	Illuminated	Not illuminated	Available	Available	Available	Available	Stop
	U2516	Not illuminated	Not illuminated	Illuminated	Illuminated	Available	Available	Stop	Stop	Stop

*1 : If a malfunction was detected in the previous driving mode, the light remains illuminated until the wheel-speed sensor is verified to be normal.
*2 : The warning light illuminates during rear wheel malfunction.
*3 : Stops control when there is malfunction in both rear wheels.
*4 : The light will go out when engine coolant temperature rises.
*5 : When engine coolant temperature is **0°C {32°F}** or less, and TCS operation is inhibited by PCM. When engine coolant temperature rises and TCS OFF light goes out, the system is normal.
*6 : If a malfunction was detected in the previous driving mode, the light remains illuminated until the system is verified to be normal when the vehicle is driven at a speed of **10 km/h {6.2 mph}** or more.
*7 : The warning light does not illuminates only during stability control solenoid valve or traction switch solenoid valve off stuck malfunction.
*8 : The warning light illuminates during rear solenoid valves off stuck malfunction.
*9 : Control dose not stop during stability control solenoid valves or traction switch solenoid valve off stuck malfunction.
*10 : Control does not stop during each solenoid valves (except rear inlet solenoid valve) off stuck malfunction.
*11 : The light will go out when the failure is solved.
*12 : If malfunction is related to CAN, light does not illuminate.
*13 : If malfunction is related to CAN, system does not stop.
*14 : Engine TCS is only available
*15 : Engine TCS is only available when pressure reduction inoperation is detected.
*16 : If malfunction is related to combine sensor 0 point adjustment or configuration, light dose not illuminate.
*17 : If malfunction is related to combine sensor 0 point adjustment or configuration, system dose not stop.
*18 : If the module does not configurated, light flashes.
*19 : When engine speed malfunction is detected, brake TCS is only available.
*20 : When engine is mismatch installed, the light does not illuminate.
*21 : When engine is mismatch installed, the system does not stop.
*22 : If malfunction is related to CAN (engine speed), the light illuminates.
*23 : When engine speeed signal has malfunction, only brake DSC is available.
*24 : When engine control system has malfunction, only brake TCS is available.
*25 : When engine control system has malfunction, only brake DSC is available.

PID/DATA Monitor Function

- This function allows access to certain data values, input signal, calculated values, and system status information.

PID/DATA monitor table

PID name	Input/output part	Operation/unit (WDS or equivalent)
ABS_LAMP	ABS warning light driver output state	ON/OFF
ABSLF_ I	LF ABS pressure retention valve output state	ON/OFF
ABSLF _O	LF ABS pressure reduction valve output state	ON/OFF
ABSLR_ I	LR ABS pressure retention valve output state	ON/OFF
ABSLR_ O	LR ABS pressure reduction valve output state	ON/OFF
ABSRF_ I	RF ABS pressure retention valve output state	ON/OFF
ABSRF_ O	RF ABS pressure reduction valve output state	ON/OFF
ABSRR _I	RR ABS pressure retention valve output state	ON/OFF
ABSRR _O	RR ABS pressure reduction valve output state	ON/OFF
ABS_VOLT	System battery voltage value	VOLTAGE
BOO _ABS	Brake pedal switch input	ON/OFF
BRK_FLUID	Brake fluid level sensor input	OK/LOW
BRAKE_LAMP	BRAKE system warning light driver output state	ON/OFF
CCNTABS	Number of continuous trouble code set	Number of continuous codes
LAT ACC	Lateral-G sensor	ACCELERATION
L_DSC O	Stability control solenoid valve (LF—RR)	ON/OFF
LF_ WSPD	LF wheel-speed sensor input	KPH or MPH
LR_ WSPD	LR wheel-speed sensor input	KPH or MPH
MCYLI P	Brake fluid pressure sensor	MPA
ABSVLVRLY	ABS valve control relay	ON/OFF
ABSPMPRLY	ABS pump motor relay	ON/OFF
PMPSTAT	ABS pump motor states	ON/OFF
RF _WSPD	RF wheel-speed sensor input	KPH or MPH
RPM	PCM	RPM
RR_ WSPD	RR wheel-speed sensor input	KPH or MPH
SWA POS	Steering angle sensor	ANGLE
R_DSC O	Stability control solenoid valve (RF—LR)	ON/OFF
TC LVAL	Traction switch solenoid valve (LF—RR)	ON/OFF
TC RVAL	Traction switch solenoid valve (RF—LR)	ON/OFF
TCSOUTD	PCM	PERCENTAGE
TPI	PCM	PERCENTAGE
TRAC_SW	TCS OFF switch	ON/OFF
TRANSGR	PCM	Number of continuous codes
ACCLMTR	Fail-safe relay output state	ACCELERATION
YAW_RATE	Yaw rate sensor	PERCENTAGE

Active Command Modes Function

- This function allows control of devices through the WDS or equivalent.

Active Command Modes Table

Command Name	Definition	Operation	Note
RF_DSC_V	Stability control solenoid valve (RF-LR)	ON/OFF	Ignition key at ON (Engine OFF), and driving
LF_DSC_V	Stability control solenoid valve (LF-RR)	ON/OFF	
ABS_POWER	Fail-safe relay	ON/OFF	
LR_OUTLET	Left rear ABS pressure reduction solenoid valve	ON/OFF	
LR_INLET	Left rear ABS pressure retention solenoid valve	ON/OFF	
RR_INLET	Right rear ABS pressure retention solenoid valve	ON/OFF	
RR_OUTLET	Right rear ABS pressure reduction solenoid valve	ON/OFF	
LF_INLET	Left front ABS pressure retention solenoid valve	ON/OFF	
LF_OUTLET	Left front ABS pressure reduction solenoid valve	ON/OFF	
RF_INLET	Right front ABS pressure retention solenoid valve	ON/OFF	
RF_OUTLET	Right front ABS pressure reduction solenoid valve	ON/OFF	
PMP_MOTOR	ABS motor	ON/OFF	
RF_TC_VLV	Traction switch solenoid valve (RF-LR)	ON/OFF	
LF_TC_VLV	Traction switch solenoid valve (LF-RR)	ON/OFF	
TRAC OFF	Traction control off indicator	ON/OFF	
STAB_IND	DSC indicator light	ON/OFF	
YAWRATE	Yaw rate sensor initialization start	ON/OFF	
LATACCEL	Lateral accel sensor initialization start	TRUE/FALSE	

Note

- When operating the ABS motor and each valve forcibly, turn VPWR RLY on, and then each command on. VPWR RLY regulates the power supply for the ABS motor and eight valves.

External Tester Communication Function

- The external tester communication function communicates diagnostic information (reading DTCs, reading input/output signal, driving output parts) by sending and receiving signal between the DSC unit and external tester.

Connection and communication information

	External tester	
	WDS or equivalent	
	Connection	Communication method
On-board diagnostic (malfunction detection) function	Input/output: KLN signal	Serial communication
Data monitor function	Input/output: KLN signal	Serial communication
Active command modes function	Input/output: KLN signal	Serial communication

Serial Communication

- Serial communication (synchronous communication) is a method of communication in which many pieces of information are sent and received instantaneously through a single wire.
- By connecting the WDS or equivalent to data link connector, diagnostic information can be sent and received between the WDS or equivalent and the ABS (ABS/TCS) or DSC HU/CM via the KLN terminal.
- The DSC HU/CM receives signals for the malfunction detection function, data monitor function, and active command modes function from the WDS or equivalent, and sends information about DTCs and input/output part operating conditions to the WDS or equivalent .

Diagnostic function	Signal received	Signal sent
Malfunction detection function	DTC verification signal	DTC
Data monitor function	Request signal to read selected monitor item	Monitor information for requested monitor item
Active command modes function	Request signal to read selected active command modes item	Output part drive signal

SUSPENSION

ABBREVIATIONS R-2
ABBREVIATIONS R-2
OUTLINE R-2
OUTLINE OF CONSTRUCTION R-2
FEATURES R-2
SPECIFICATIONS R-3
SUSPENSION DESCRIPTION R-4
FRONT SUSPENSION R-5
OUTLINE R-5
STRUCTURAL VIEW R-5
FRONT SUSPENSION DESCRIPTION R-6
FRONT SHOCK ABSORBER AND COIL SPRING R-9
FRONT CROSSMEMBER R-10
REAR SUSPENSION R-11
OUTLINE R-11
STRUCTURAL VIEW R-11
REAR SUSPENSION DESCRIPTION R-12
REAR CROSSMEMBER R-13
WHEEL AND TIRE R-14
OUTLINE R-14
STRUCTURAL VIEW R-14

ABBREVIATIONS

ABBREVIATIONS

A6E740101013T01

LF	Left front
LR	Left rear
RF	Right front
RH	Right hand
RR	Right rear
4SD	4 door sedan
5HB	5 door hatchback

OUTLINE

OUTLINE OF CONSTRUCTION

A6E740201013T01

- Both front and rear suspension systems, unique to the Mazda6 (GG) model, have been adopted as follows.
  — High-mount double wishbone (with double-pivoted lower arm(s)) front suspension
  — E-type multi-link rear suspension
- Both the front and rear suspension, employ newly developed systems, to improve the following features.

FEATURES

A6E740201013T02

Improved Handling And Straight Driving Stability

- The king-pin to wheel-center offset of the front suspension has been minimized.
- A low-friction ball joint has been adopted for the front lower arms and front upper arm.
- The tread has been widened 50 mm {1.97 in} (compared to 626 (GF) model).
- The rolling axis is set slightly aslant.
- A front shock absorber with rebound spring has been adopted.

Improved Riding Comfort

- A separate input type shock absorber mount has been adopted.
- Front and rear crossmembers with rubber mounts have been adopted.

Improved Rigidity

- A perimeter frame structure front crossmember has been adopted.
- A stiffener has been adopted for the front suspension.

Improved Serviceability

- An adjusting cam to adjust the rear camber has been adopted on the rear lower arm (rear suspension).
- A turnbuckle mechanism to adjust rear toe has been adopted on the rear lateral link (rear suspension).

Improved Marketability

- An adhesive-type balance weight has been adopted (16-inch and 17-inch aluminium alloy wheel).

Environmental Consideration

- A balance weight made of steel has been adopted (adhesive-type balance weight).

SPECIFICATIONS

A6E740201013T03

Item				Specification	
				Mazda6 (GG) (4SD, 5HB)	626 (GF) (4SD, 5HB)
Front suspension	Type			High-mount double wishbone (with double-pivoted lower arm(s))	Strut
	Spring type			Coil spring	
	Shock absorber type			Cylindrical, double-acting (Low-pressure gas charged with rebound spring)	Cylindrical, double-acting (Low-pressure gas charged)
	Stabilizer	Type		Torsion bar	
		Diameter	(mm {in})	23 {0.91}	27 {1.06}
	Wheel alignment (Unloaded)*1	Total toe-in	(mm {in})	Tire: 2±4 {0.08±0.16}, Rim inner: 1.4±2.8 {0.06±0.12}	Tire: 3±4 {0.12±0.16}, Rim inner: 2±3 {0.08±0.12}
			(degree)	0°11′±0°22′	0°17′±0°23′
		Maximum steering angle	inner	39°±3°	38°±3°
			outer	31°±3°	32°30′±3°
		Caster angle*2	normal	3°47′±1° (reference value)	1°52′±1°
			hight up*3	3°42'±1° (reference value)	—
		Camber angle*2	normal	–0°17′±1° (reference value)	–0°20′±1°
			hight up*3	–0°10'±1° (reference value)	—
		Steering axis inclination	normal	5°28′ (reference value)	12°43′(reference value)
			hight up*3	5°18' (reference value)	—
Rear suspension	Type			E-type multi-link	Strut
	Spring type			Coil spring	
	Stabilizer	Type		Torsion bar	
		Diameter	(mm {in})	4SD: 19 {0.75} 5HB: 18 {0.71}	17 {0.67}
	Shock absorber type			Cylindrical, double-acting (Low-pressure gas charged)	
	Wheel alignment (Unloaded)*1	Total toe-in	(mm {in})	Tire: 2±4 {0.08±0.16} Rim inner: 1.4±2.8 {0.06±0.12}	
			(degree)	0°11′±0°22′	0°12′±0°23′
		Camber angle*2	normal	–1°13′±1°	–0°47′±1°
			hight up*3	–1°05′±1°	—
		Thrust angle	(degree)	0°±0°48′	

*1 : Engine coolant and engine oil are at specified level. Fuel is full. Spare tire, jack and tools are in designated position.
*2 : Difference between left and right must not exceed 1°30'.
*3 : Distance between wheel center and fender brim is following. Front: 402 mm {15.8 in} (reference value) Rear: 392 mm {15.4 in} (reference value)

SUSPENSION DESCRIPTION

A6E740201013T04

Vehicle Platform Feature

- The newly developed platform of Mazda6 (GG) model is 50 mm wider than the platform of the 626 (GF) model. This feature gives a benefit equivalent to that of a 20 mm {0.79 in} reduction in the vehicle's center of gravity. As a result, handling stability and cornering capability are improved. At the same time, the platform geometry places the yaw axis (the invisible vertical axis about which the vehicle responds to driver inputs) in the center of the vehicle, resulting in reassuringly predictable response to driver inputs.

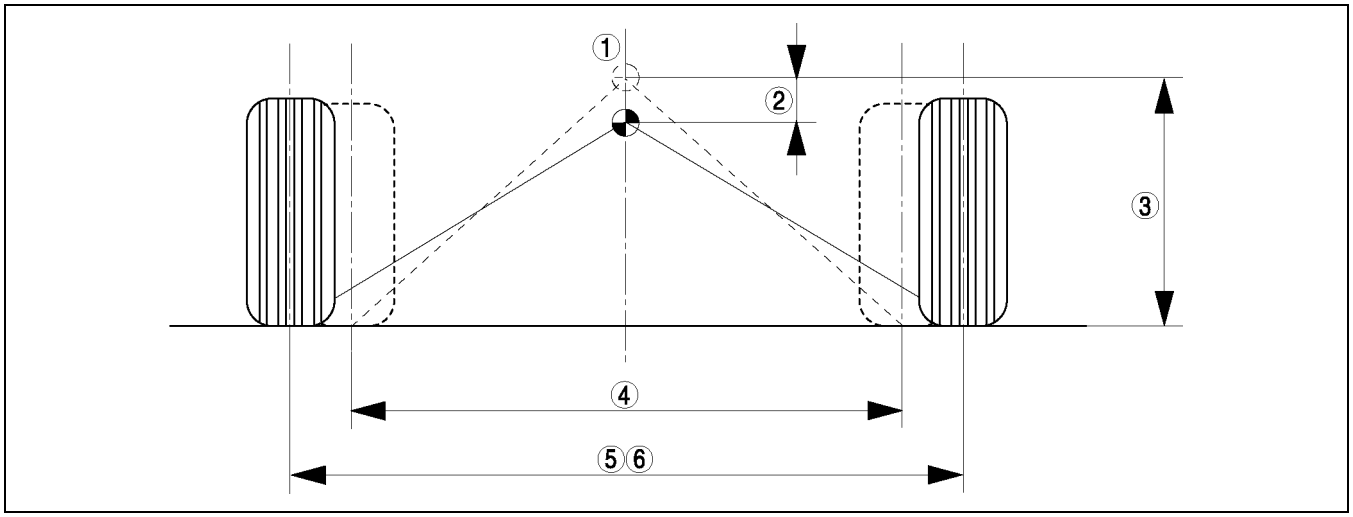

A6E7402T001

1	Center of gravity
2	Reduced 20 mm {0.79 in}
3	Height

4	Tread (626 (GF) model)
5	Tread (Mazda6 (GG) model)
6	+50 mm {1.97 in}

Vehicle Roll Center Height Setting

- The front roll center height is set lower than the rear. Straight- ahead driving handling is improved by setting the rolling axis at a slightly forward angle.

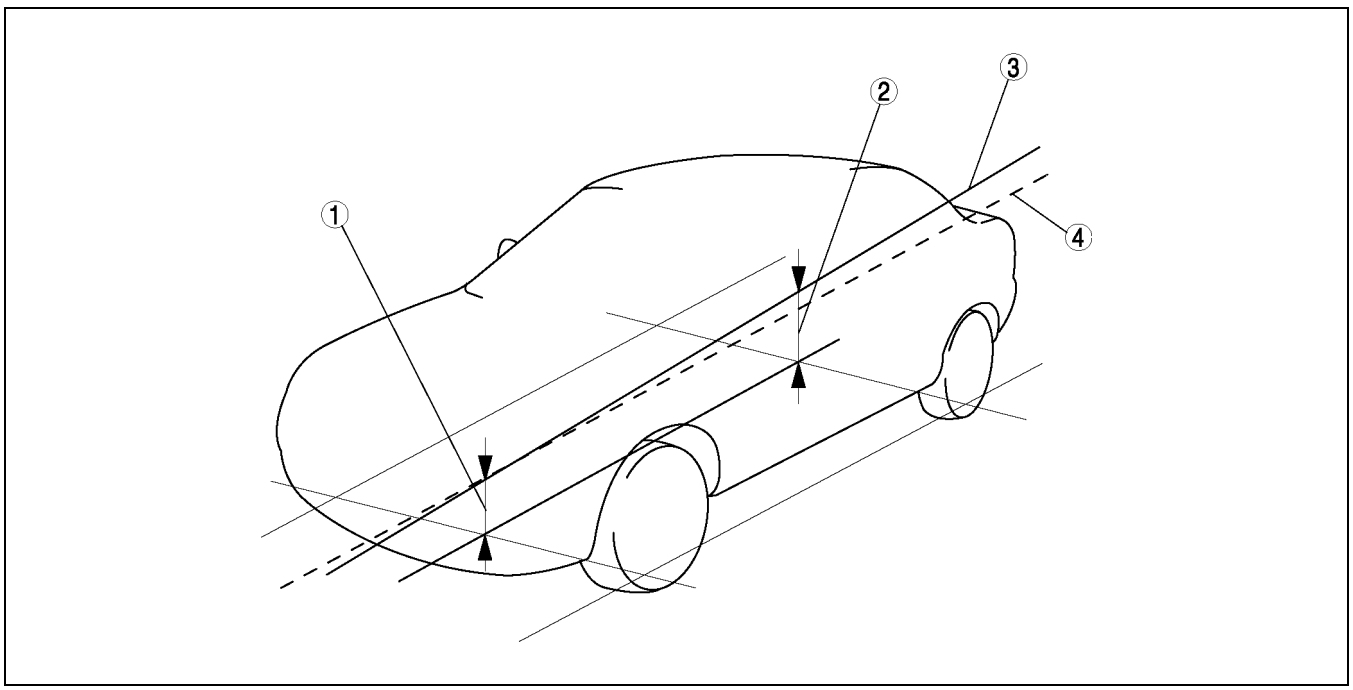

A6E7402T002

1	Front roll center height
2	Rear roll center height

3	Rolling axis
4	Extended line (parallel to the ground) from front roll center height

FRONT SUSPENSION

OUTLINE

A6E741401015T01

- A high-mount double wishbone (with double-pivoted lower arm(s)) front suspension, unique to the Mazda6 (GG) model, has been adopted.
- The front suspension design includes a link layout that provides both handling stability and riding comfort, and creates suitable camber control characteristics.
- The upper arm and lower arm(s) of the front suspension have a similar link layout to that of the conventional double wishbone suspension, except for the double-pivoted lower arm(s).
- The double-pivoted lower arm(s) allows for a small king-pin to wheel-center offset, as well as a small moment of inertia around the king-pin axis.

STRUCTURAL VIEW

A6E741401015T02

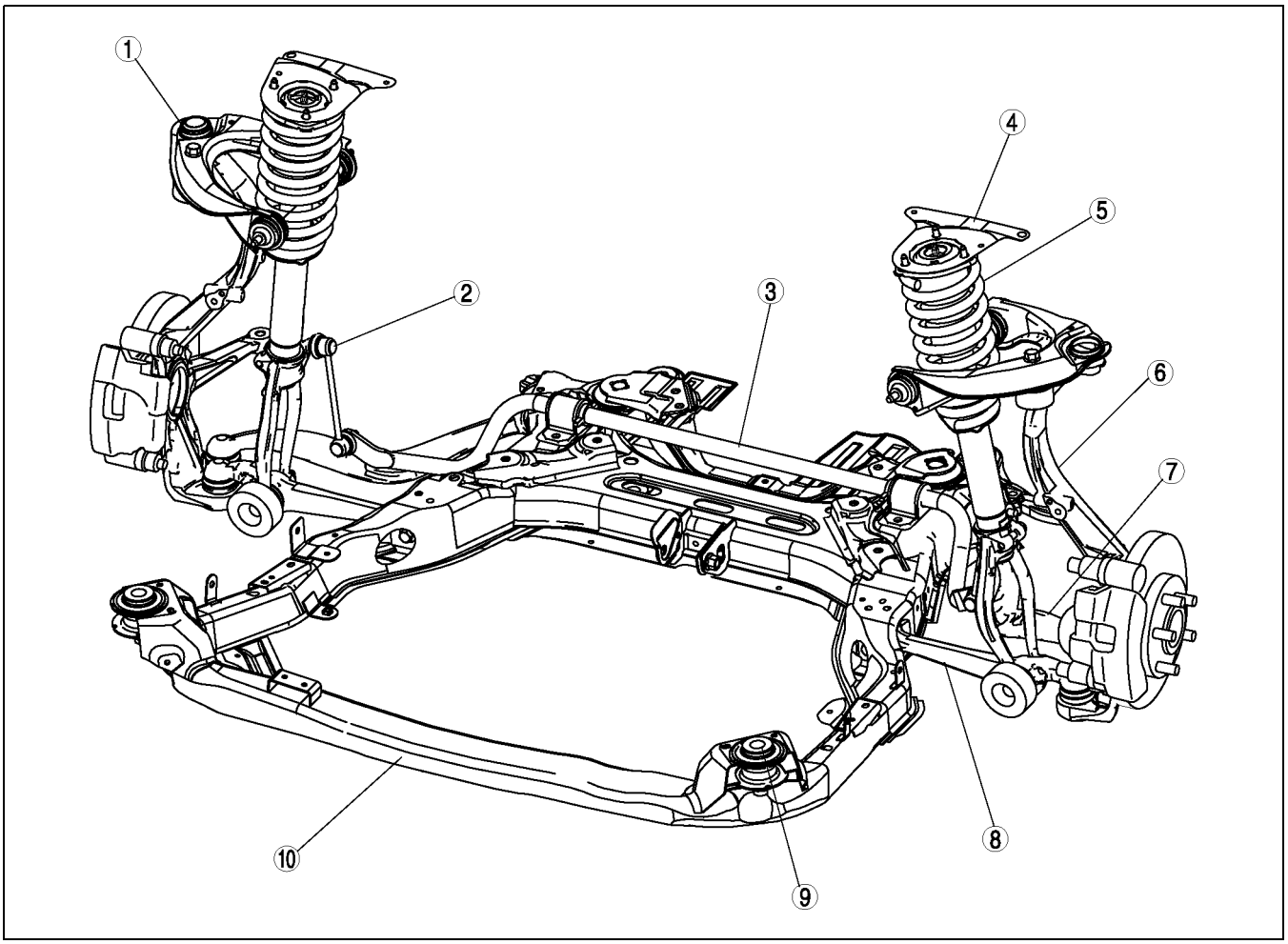

A6E7414T001

1	Front upper arm
2	Front stabilizer control link
3	Front stabilizer
4	Stiffener
5	Front shock absorber and coil spring

6	Knuckle
7	Front lower arm (rear)
8	Front lower arm (front)
9	Front crossmember mounting bushing
10	Front crossmember

FRONT SUSPENSION DESCRIPTION

A6E741401015T03

King-pin Axis Configuration

- The king-pin axis, depending on the type of front suspension, is as follows:
  - — In the strut type front suspension, wheels rotate around the king-pin axis going from the point where the shock absorber is attached to the body (point A) to the ball joint (point B).
  - — In the high-mount double wishbone type front suspension (with double-pivoted lower arm(s)), wheels rotate around the king-pin axis going from the upper arm ball joint (point C) to the imaginary pivot line (point D) extended from the lower arm(s).
- The intersection of king-pin axis and the road surface (point E) is offset in the vehicle from the wheel setting center point of on the road (point W), producing a king-pin offset.
- Compared to the strut front suspension, the high-mount double wishbone front suspension (with double-pivoted lower arm(s) has the following technical advantages:
  - — The moment of inertia around the king-pin axis is reduced due to the short king-pin to wheel-center offset. This feature reduces undesirable vehicle behaviour such as steering pull and judder when breaking, smooth steering obstruction due to road conditions, and the influence of steering torque due to road undulation.
  - — The king-pin offset value (negative king-pin offset) is optimized. Due to this, the influence of the axis weight is not felt and steering control is lightened. Also, straight driving stability is improved because the toe-in moment from the braking effort the wheels counteracts the yaw moment caused by road surface conditions and/or the difference of right and left wheel braking effort.

Suspension system comparison

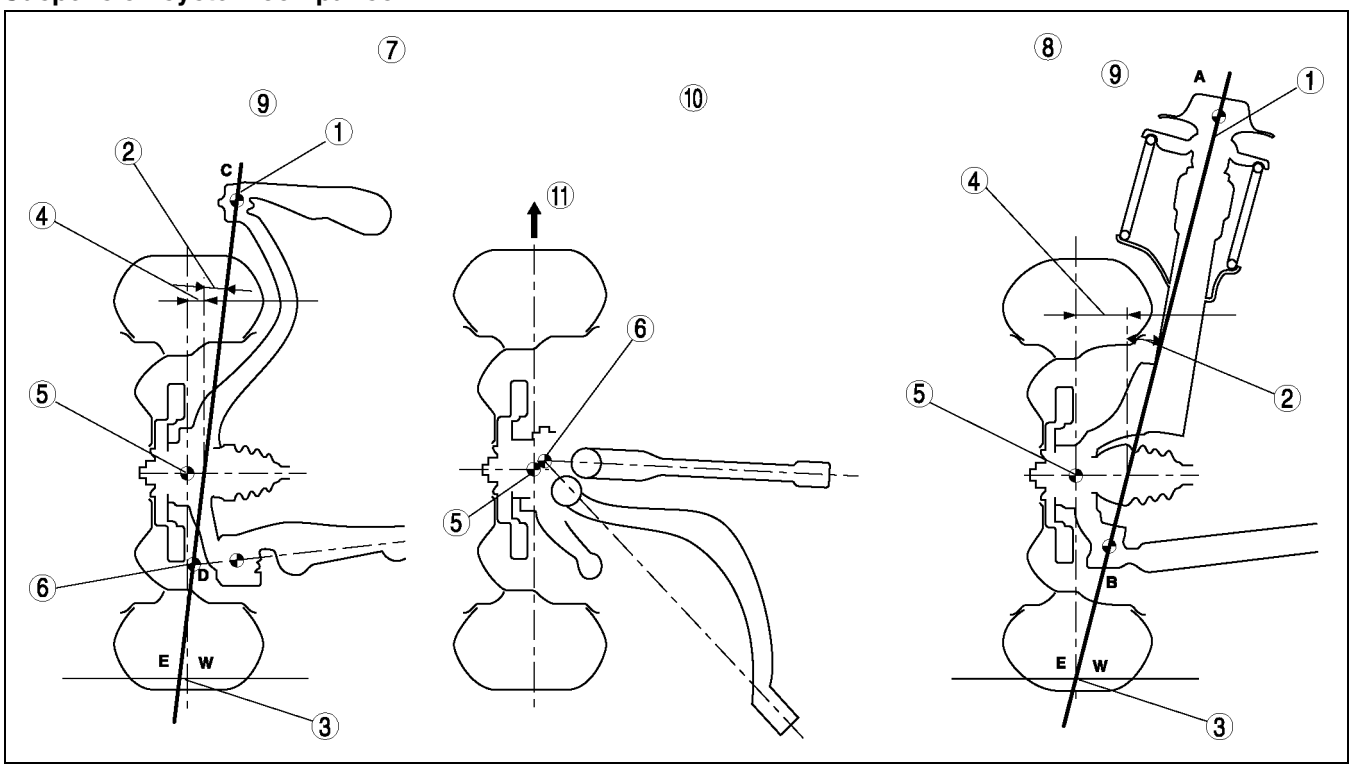

A6E7414T002

1	King-pin axis
2	King-pin inclination
3	King-pin offset
4	King-pin to wheel-center offset
5	Wheel center
6	Imaginary pivot

7	High-mount double wishbone front suspension
8	Strut front suspension (626 (GF) model)
9	View from horizontal axis of the vehicle
10	View from vertical axis of the vehicle
11	Front

Camber Control

- The camber change during a front suspension stroke is properly controlled by optimizing the ratio of the front upper arm and the front lower arm(s) lengths.

Camber control characteristic comparison

1	Rebound stroke area
2	Bump stroke area
3	Camber angle (°)
4	Wheel stroke (mm)
5	Vehicle roll angle (°)
6	Strut front suspension (626 (GF) model)
7	High-mount double wishbone front suspension

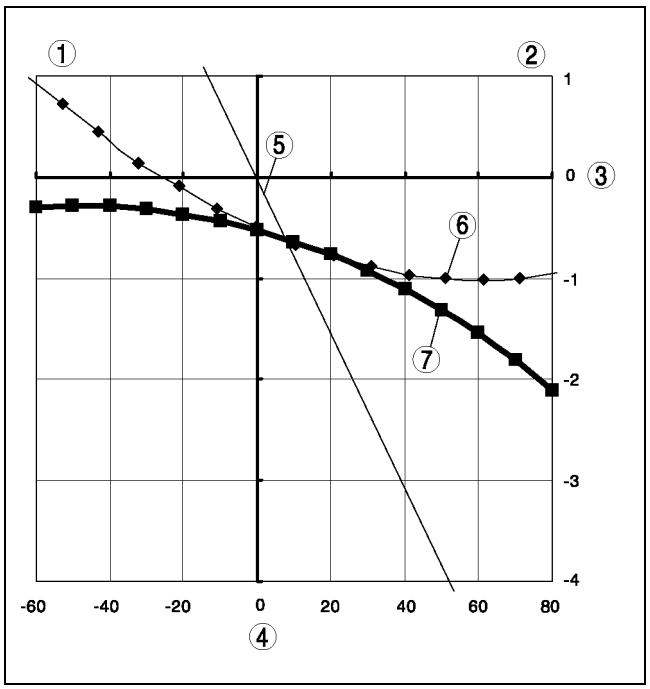

A6E7414T003

R

Low-friction Ball Joint

- A low-friction ball joint is used on the knuckle side of the front upper arm and lower arm(s) to improve steering response and to smoothness.

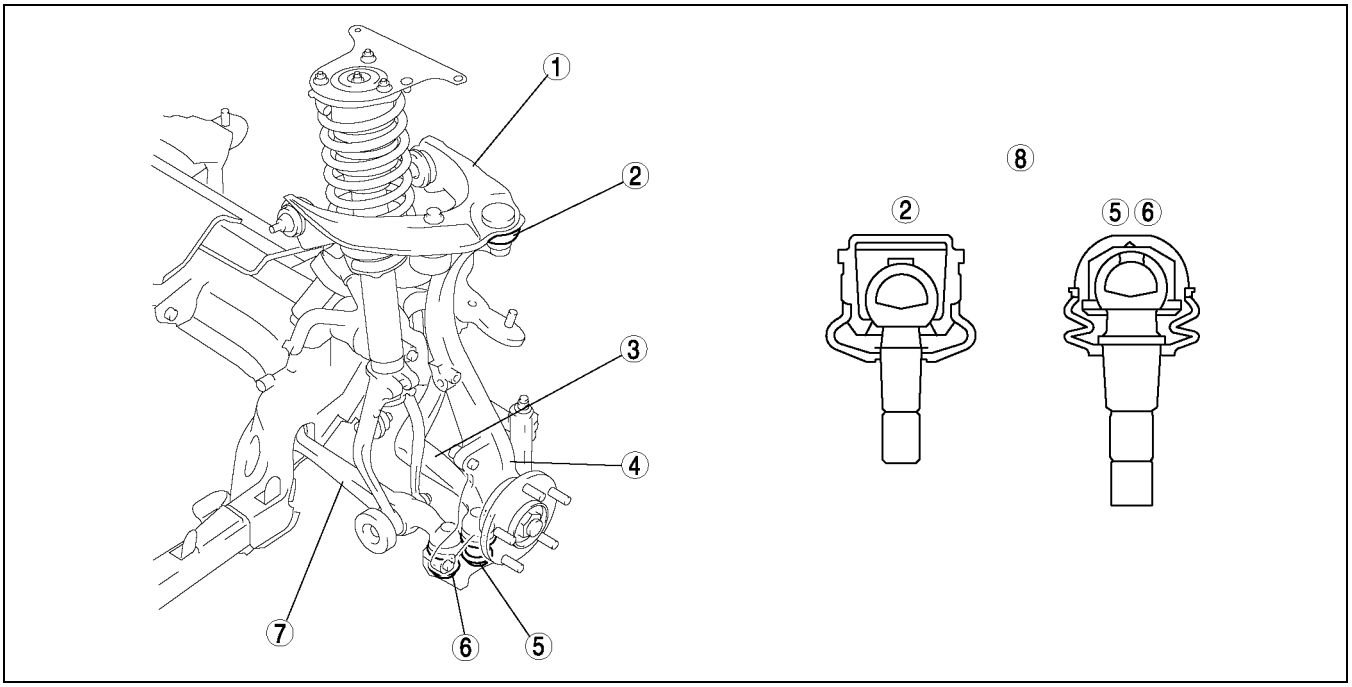

A6E7414T004

1	Front upper arm
2	Low-friction ball joint (for front upper arm)
3	Front lower arm (rear)
4	Knuckle

5	Low-friction ball joint (for front lower arm (rear))
6	Low-friction ball joint (for front lower arm (front))
7	Front lower arm (front)
8	Cross-sectional view

Front Lower Arm (Rear)

- An oil-filled bushing is used with the front lower arm (rear) to reduce vibrations such as shimmy, judder, and road noise.

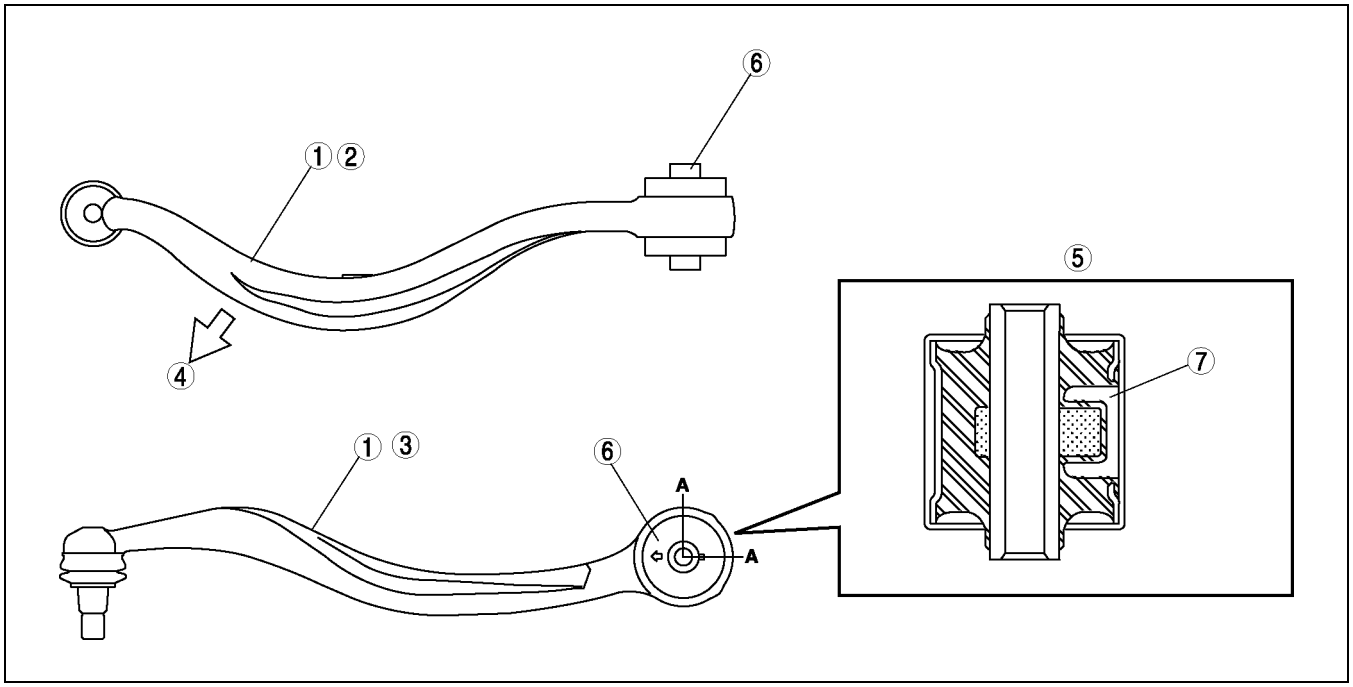

A6E7414T005

1	RH front lower arm (rear)
2	Vertical view
3	Horizontal view
4	Front

5	Cross-section A—A
6	Oil-filled bushing
7	Oil

FRONT SHOCK ABSORBER AND COIL SPRING

A6E741434700T01

Outline

- A rebound spring is included in the shock absorber which controls the increase in the spring rate to improve handling stability and rolling feeling when cornering, thereby improving riding comfort.
- A separate input type shock absorber mount, with a plate that receives the reaction force of the coil spring and the piston rod separately, has been adopted. This construction enhances the damping force and improves cornering when changing lanes. At the same time it reduces the damping force of the low speed range of the piston rod to improve riding comfort.

Cross-sectional View

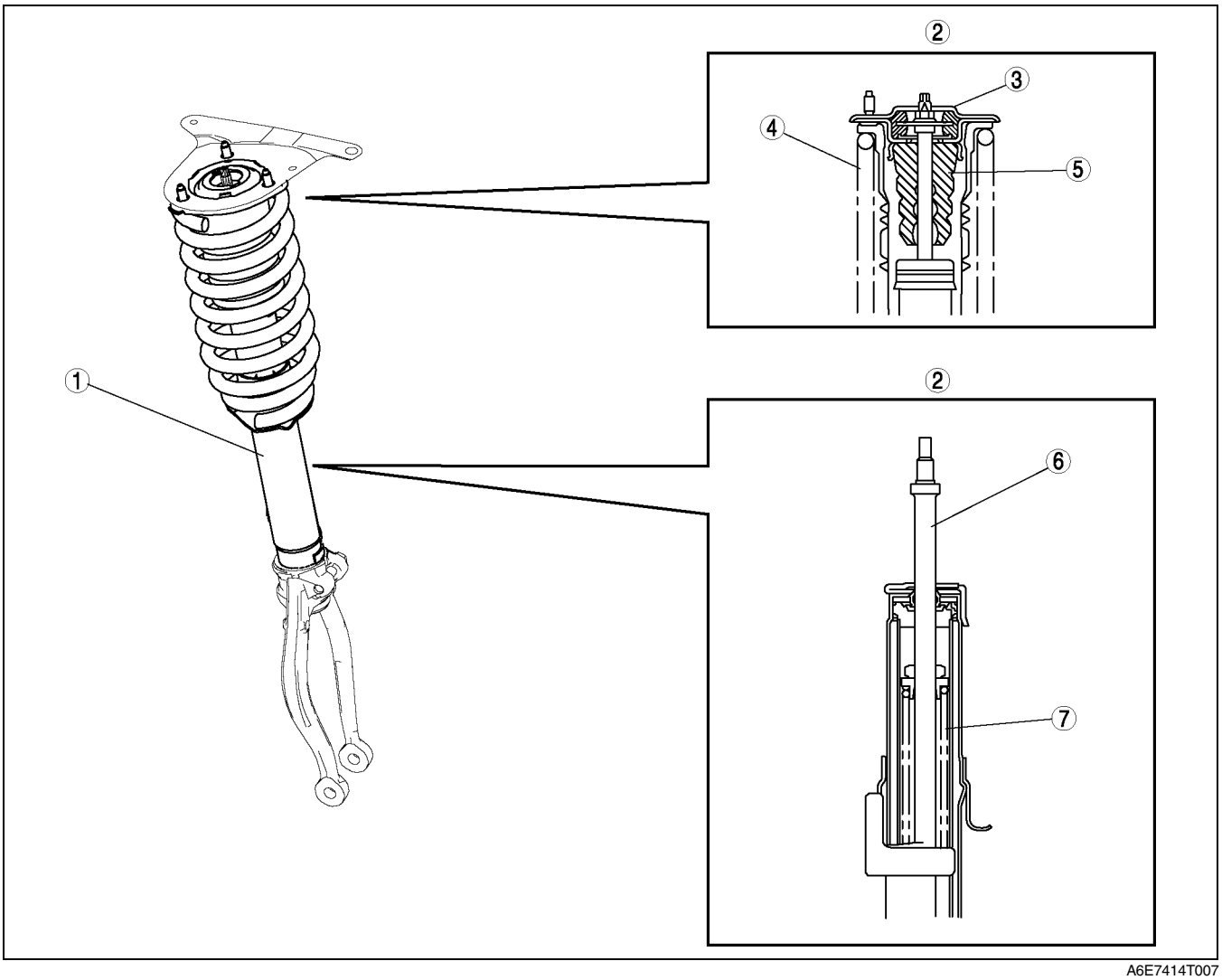

A6E7414T007

1	Front shock absorber and coil spring
2	Cross-sectional view
3	Separate input type shock absorber mount
4	Coil spring

5	Bound stopper
6	Piston rod
7	Rebound spring

FRONT CROSSMEMBER

A6E741434400T01

Outline

- A perimeter frame structure type front crossmember has been adopted to increase rigidity.
- The main parts of the front crossmember are made from a high-tension steel by hydro-formed process to improve strength without increasing weight.
- To reduce the transmission of vibration and noise from suspension system to the body, rubber mounts are used at the four connecting points of the front crossmember to the body.
- The crossmember mounting bushings have optimally low spring rates, and they each have a two- piece structure that realizes the softness necessary for riding comfort without compromising the firmness necessary for handling stability.

Structural View

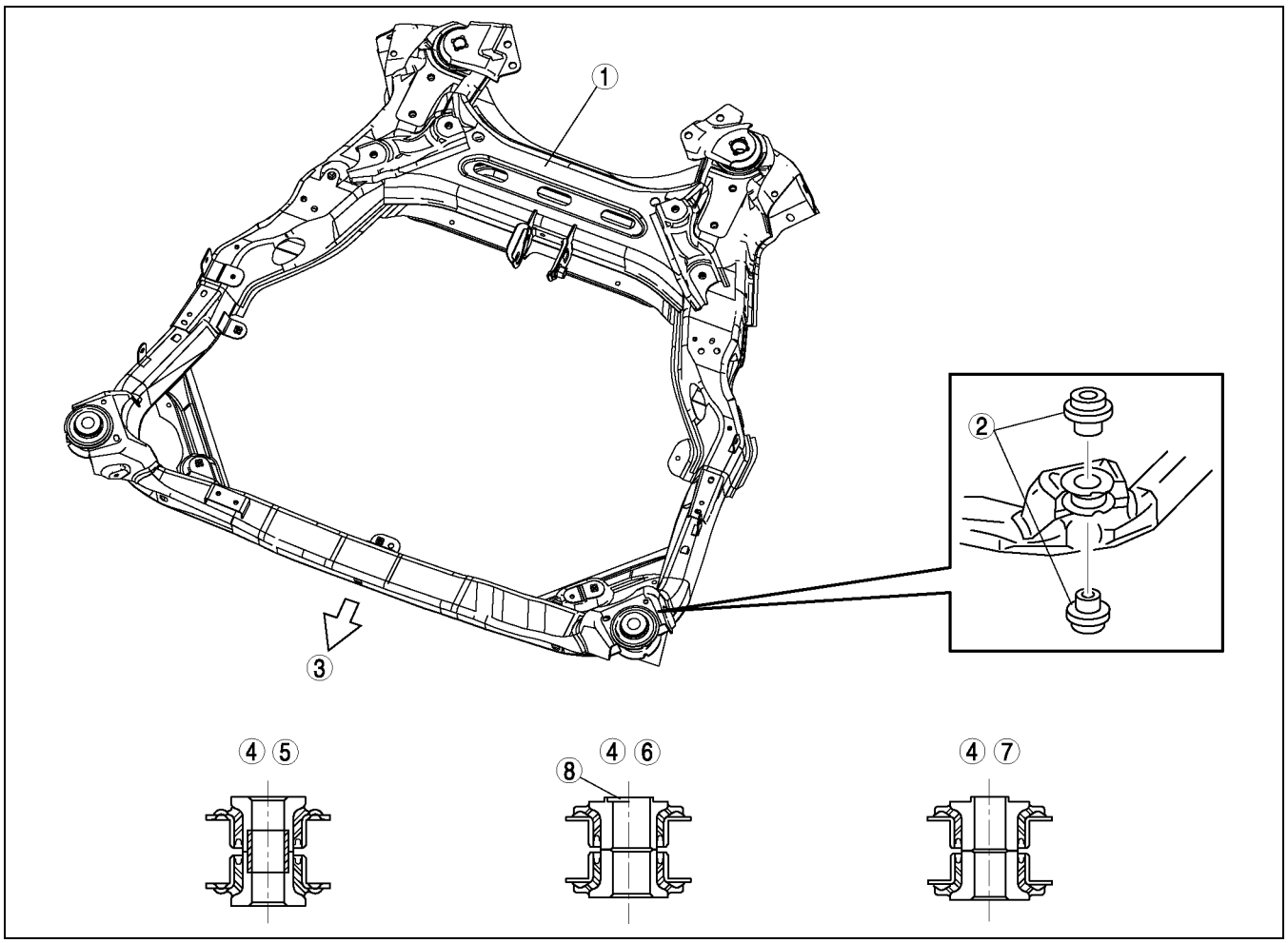

A6E7414T006

1	Front crossmember main frame
2	Two-piece structure crossmember mounting bushings
3	Front
4	Crossmember mounting bushings cross-sectional view

5	Crossmember mounting bushings (LF and RF)
6	Crossmember mounting bushings (LR)
7	Crossmember mounting bushings (RR)
8	Oval hole

REAR SUSPENSION

OUTLINE

A6E741601016T01

- An E-type multi-link rear suspension, unique to the Mazda6 (GG) model, has been adopted.
- The rear suspension design includes a link layout that provides both handling stability and riding comfort, and creates suitable camber control characteristics.
- E-type multi-link rear suspension arm/link layout is similar link layout to that of the conventional multi-link rear suspension, except for the separated layout of shock absorber and coil spring.
- The coil spring and shock absorber have been separated, and the coil spring is held between the rear crossmember and rear lower arm. This enables the shock absorber and the coil spring to be located closer together for a lower and flatter passenger cabin floor.
- The separated layout of shock absorber and coil spring eliminayes friction between the two parts. Also, shock absorber side force is reduced so the suspension system operates smoothly and riding comfort is improved.

STRUCTURAL VIEW

A6E741601016T02

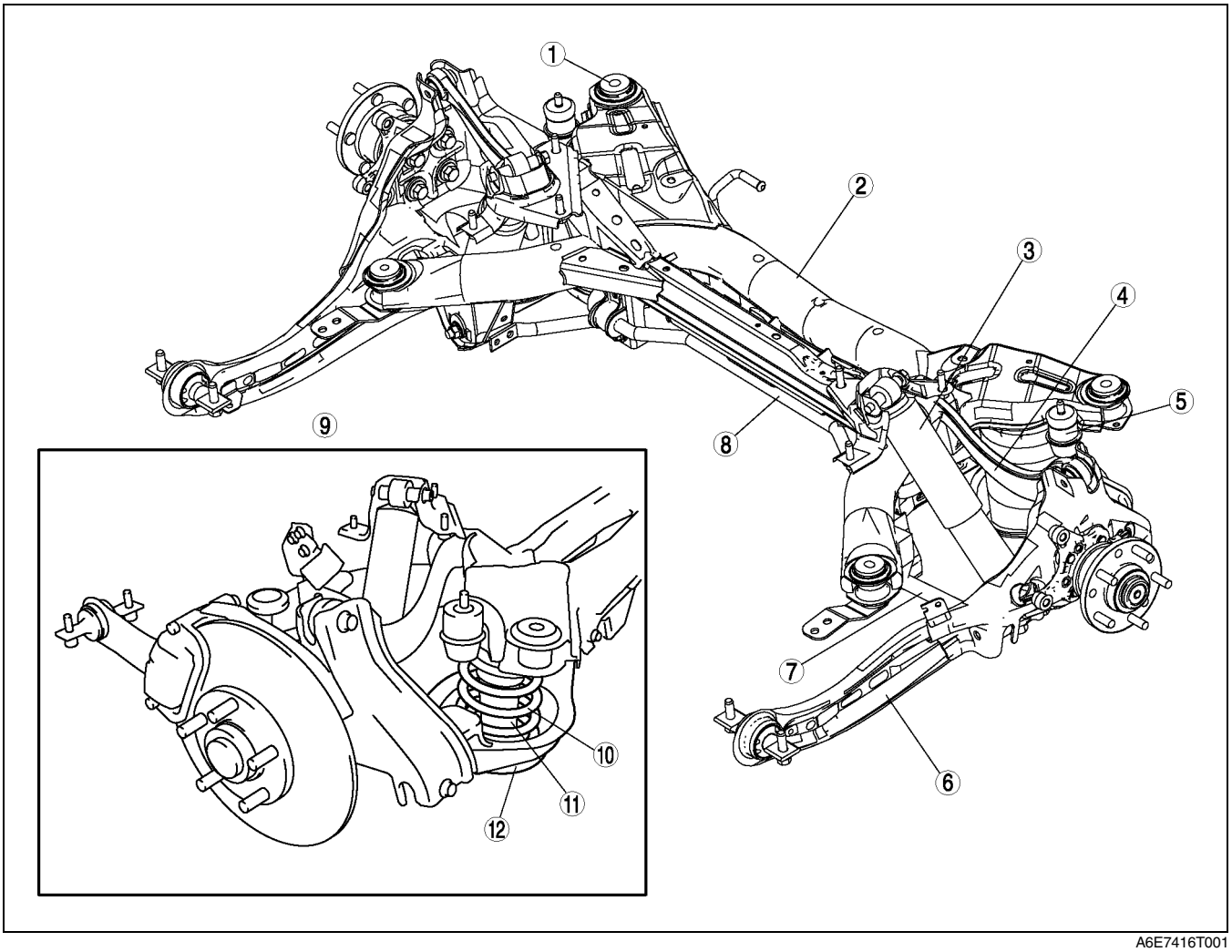

A6E7416T001

1	Rear crossmember mounting bushing
2	Rear crossmember
3	Rear shock absorber
4	Rear upper arm
5	Bound stopper (body side)
6	Rear trailing arm

7	Rear lateral link
8	Rear stabilizer
9	View from vehicle rear side
10	Rear coil spring
11	Bound stopper (spring side)
12	Rear lower arm

REAR SUSPENSION DESCRIPTION

A6E741601016T03

Camber Control

- The camber change during a suspension stroke of the E-type multi-link rear suspension is properly controlled by optimizing the ratio of the rear lower arm and the rear upper arm.

Camber control characteristic comparison

1	Rebound stroke area
2	Bump stroke area
3	Camber angle (°)
4	Wheel stroke (mm)
5	Vehicle roll angle (°)
6	Strut rear suspension (626 (GF) model)
7	E-type multi-link rear suspension

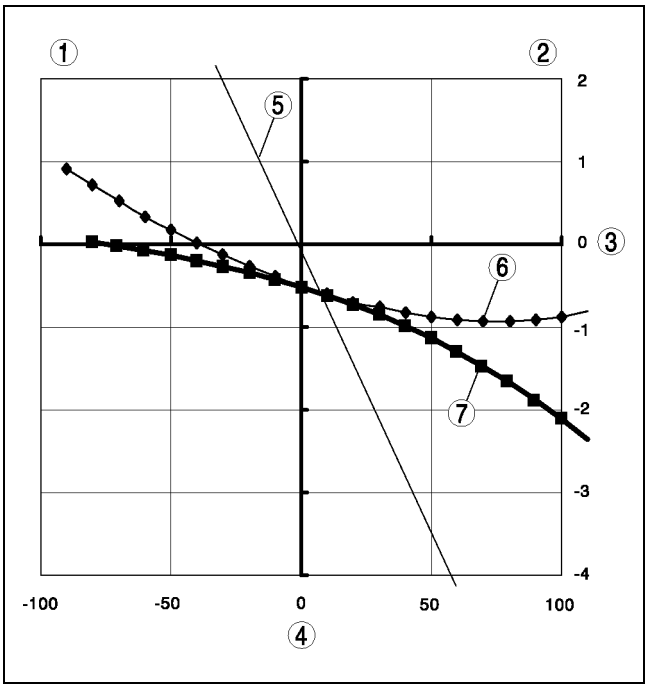

A6E7416T002

Camber Adjustment

- The camber is adjusted by turning the adjusting cam on the rear lower arm.
- Turning the cam one graduation changes the camber angle approx. 0°20′.

1	Left rear side
2	Adjusting cam

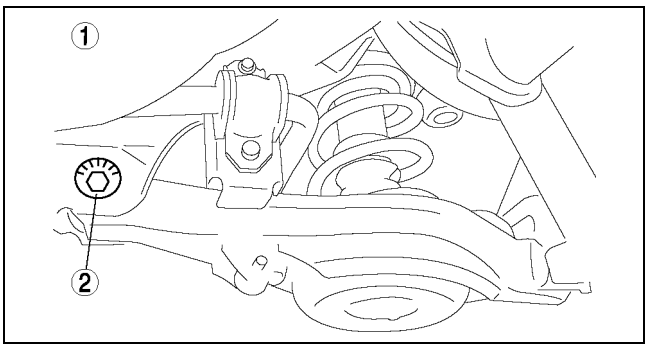

A6E7416T003

Toe Adjustment

- The turnbuckle mechanism for toe-in adjustment is located in the center of rear lateral link.
- By rotating the adjusting rod, the amount of toe can be changed. (One turn of the adsjusting rod changes the toe approx. 0°43′.)

1	Front
2	Left threaded
3	Right threaded
4	Adjusting rod
5	Axle side
6	For toe-out
7	For toe-in

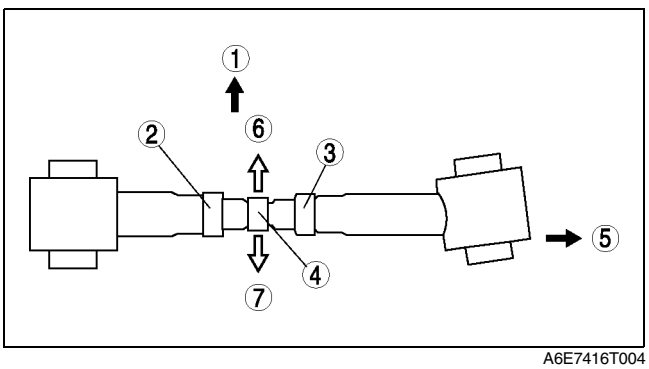

A6E7416T004

REAR CROSSMEMBER

A6E741628400T01

Outline

- The rear crossmember main frame is made from a steel pipe, improving strength without increasing weight.
- To reduce the noise from the suspension system to the body, rubber mounts are used at the four connecting points of ther ear crossmember to the body.
- The construction of the rear crossmember mounting bushings are same as that of the front crossmember mounting bushings.

Structural View

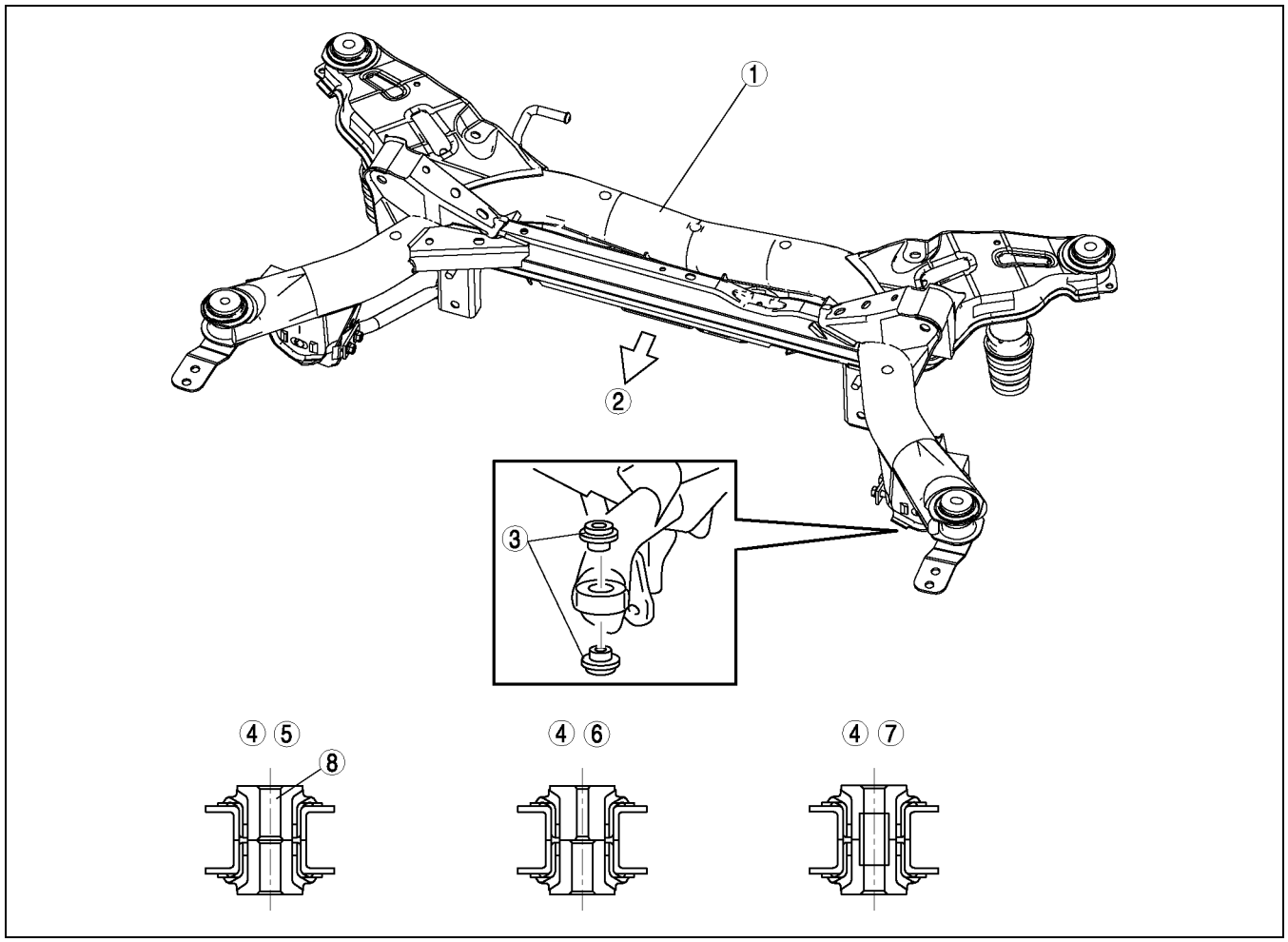

A6E7416T005

1	Rear crossmember main frame
2	Front
3	Two-piece structure crossmember mounting bushings
4	Crossmember mounting bushings cross-sectional view

5	Crossmember mounting bushings (LF)
6	Crossmember mounting bushings (RF)
7	Crossmember mounting bushings (LR and RR)
8	Oval hole

WHEEL AND TIRE

OUTLINE

A6E741701014T01

- In consideration of the environment, an adhesive-type balance weight made of steel has been adopted to reduce amount of lead used in the vehicle (16-inch and 17-inch aluminum alloy wheel).
- An adhesive-type balance weight is fastened on the inner side of the wheel. Since it is not visible from the styled side of the wheel, the design of the wheel is favored.

STRUCTURAL VIEW

A6E741701014T02

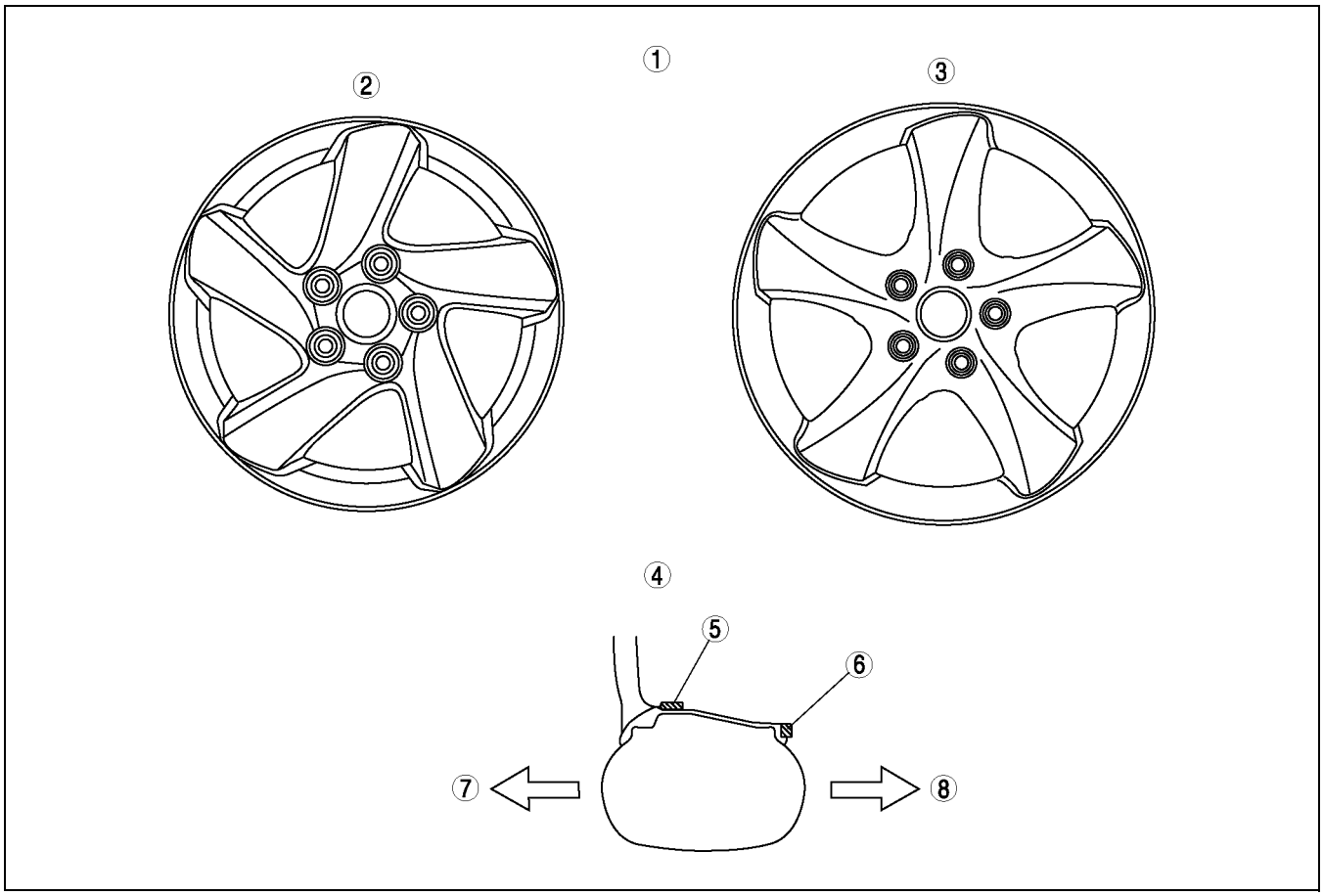

A6E7417T001

1	Styled side of wheel
2	16-inch aluminum alloy wheel
3	17-inch aluminum alloy wheel
4	Cross-sectional view

5	Adhesive-type balance weight
6	Knock-type balance weight
7	Outer
8	Inner

BODY

OUTLINE S-2
ABBREVIATION S-2
OUTLINE OF CONSTRUCTION S-2
FEATURES S-2
DOOR S-3
OUTLINE S-3
STRUCTURAL VIEW S-3
POWER WINDOW SYSTEM S-4
OUTLINE S-4
STRUCTURAL VIEW S-4
SYSTEM WIRING DIAGRAM S-5
DRIVER SIDE POWER WINDOW SYSTEM S-6
POWER WINDOW MOTOR S-7
POWER DOOR LOCK SYSTEM S-8
OUTLINE S-8
STRUCTURAL VIEW S-8
SYSTEM WIRING DIAGRAM S-9
KEYLESS ENTRY SYSTEM S-9
LIFTGATE LOCK ACTUATOR S-10
OUTSIDE MIRROR S-11
OUTLINE S-11
STRUCTURAL VIEW S-11
SYSTEM WIRING DIAGRAM S-11
REAR WINDOW DEFROSTER S-12
OUTLINE S-12
STRUCTURAL VIEW S-12
SYSTEM WIRING DIAGRAM S-13
SLIDING SUNROOF S-14
OUTLINE S-14
STRUCTURAL VIEW S-14
SYSTEM WIRING DIAGRAM S-15
DASHBOARD AND CONSOLE S-16
OUTLINE S-16
STRUCTURAL VIEW S-16
SEAT S-17
OUTLINE S-17
STRUCTURAL VIEW S-17
FRONT SEAT S-18
REAR SEAT S-18
EASY FOLD-DOWN FUNCTION S-20
BODY SHELL S-22
OUTLINE S-22
STRUCTURAL VIEW S-22
CRUSHABLE ZONE S-23
CABIN S-24
SHROUD PANEL S-24
FRONT BUMPER REINFORCEMENT S-25

OUTLINE

ABBREVIATION

A6E770201086T01

B+	Battery positive voltage
IG	Ignition
L.H.D.	Left hand drive
M	Motor
P/W CM	Power window control module
SEC.	Section
4SD	4 door sedan
5HB	5 door hatchback

OUTLINE OF CONSTRUCTION

A6E770201086T02

- The construction and operation of the body system is essentially carried over from that of the current PREMACY (CP) model, except for the following features. (See PREMACY Training Manual 3336-1*-99C.)

FEATURES

A6E770201086T03

Improved Safety

- A steel bumper reinforcement has been adopted.

Improved Convenience

- An easy fold-down function has been adopted for rear seat.

Improved Marketability

- A lumber support has been adopted for driver's side front seat.

Improved Serviceability

- The keyless unit and the door lock timer unit have been integrated.
- Power window system initial setting procedure has been simplified.

Consideration for Environment

- Recycled materials are used in the door units and shroud panel.

DOOR

OUTLINE

A6E771458010T01

- A ripple-shaped side impact bar has been adopted to improve rigidity in case of a collision.
- The inner construction of the door, including the power window regulator, inner handle, door speaker, harness and others, have been integrated into a single door unit.
- Due to the integrated door unit, weight reduction has been achieved for the whole door.
- Waterproofing of the inner door unit parts is achieved due to sectional design.
- Fiberglass reinforced plastics have been adopted for the door unit to improve the rigidity. Additionally, in order to address environmental concerns, recycled materials are used in the unit.

STRUCTURAL VIEW

A6E771458010T02

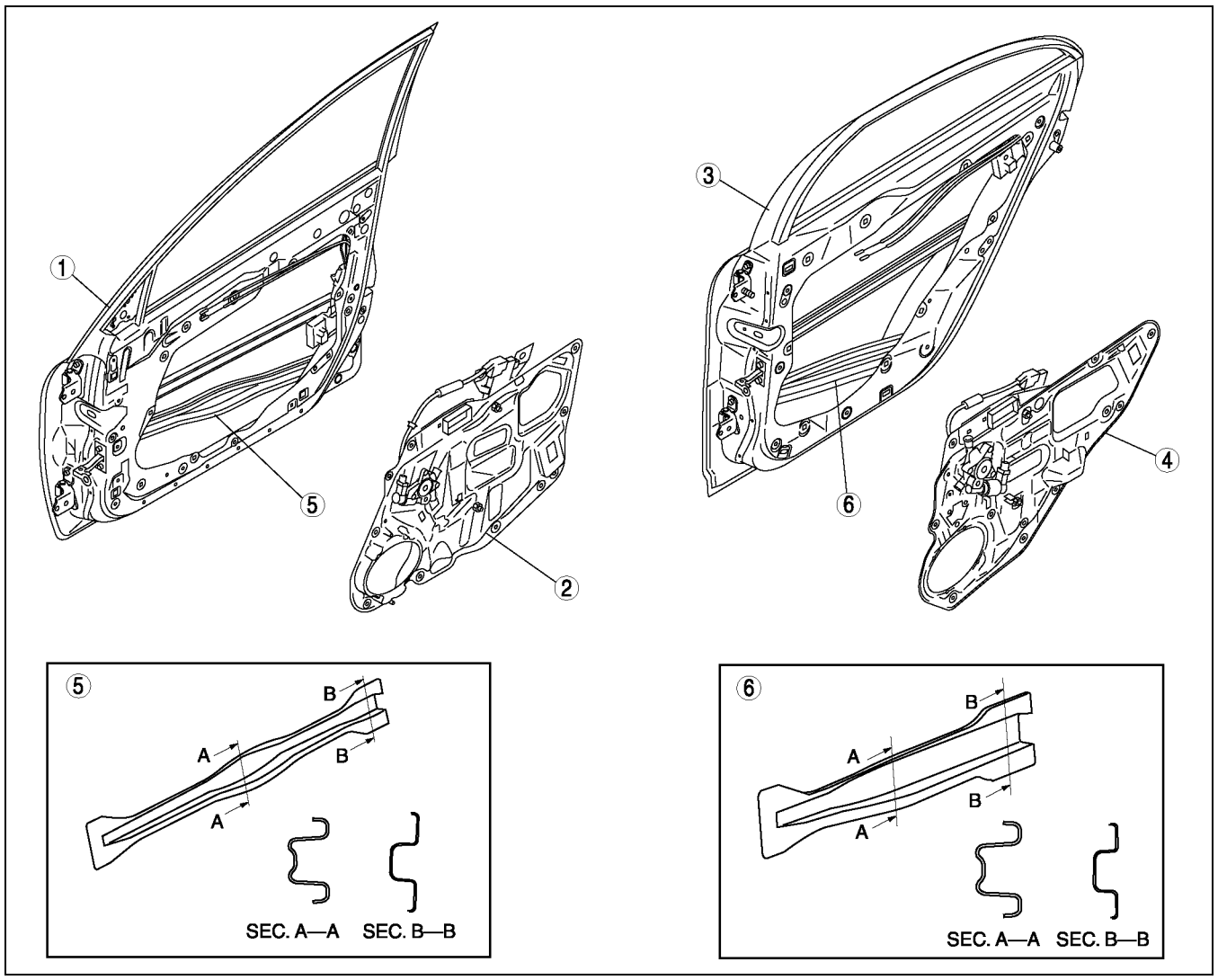

A6E7714T001

1	Front door
2	Front door unit
3	Rear door

4	Rear door unit
5	Front side impact bar
6	Rear side impact bar

S

POWER WINDOW SYSTEM

OUTLINE

A6E771658000T01

- The function, structure and operation of power window system is essentially carried over from that of the current PREMACY (CP) model, except for the following.
  — The driver-side power window system, which previously operated on the basis of the limit switch and the pulse signal, has been changed to a system that operates on the basis of two kinds of pulse signals. Although the new system maintains the current functions, the system and the initial setting have been simplified to increase serviceability.

×: Available

Function	Mazda6 (GG)	PREMACY (CP)
Manual up/down	×	×
Auto up/down (driver's only)	×	×
Automatic window return function (driver's only)	×	×
Two-step down function (driver's only)	×	×
IG-OFF timer function	×	×
Fail-safe function	×	×

STRUCTURAL VIEW

A6E771658000T02

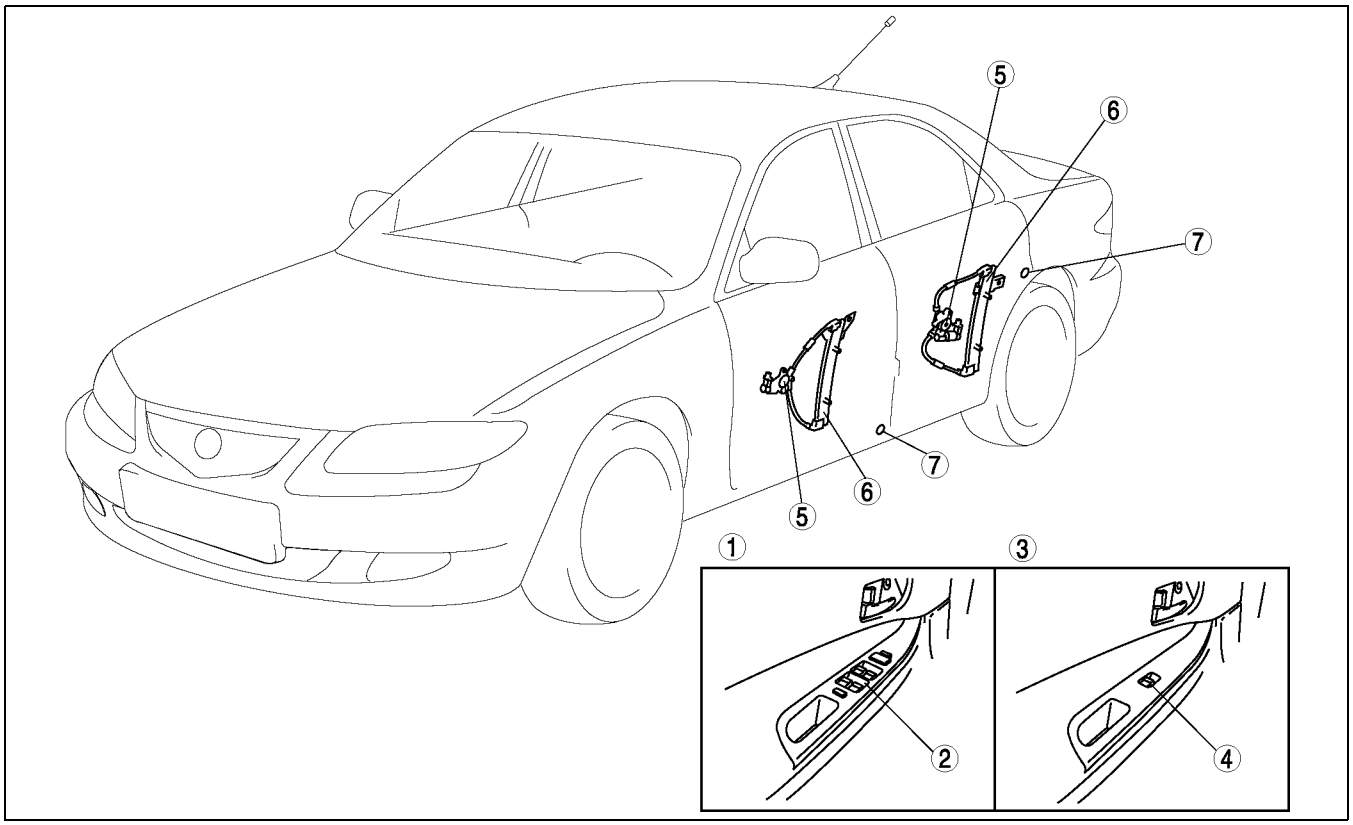

A6E7716T003

1	Driver's side
2	Power window main switch
3	Except driver's side
4	Power window subswitch

5	Power window motor
6	Power window regulator
7	Door switch

SYSTEM WIRING DIAGRAM

A6E771658000T03

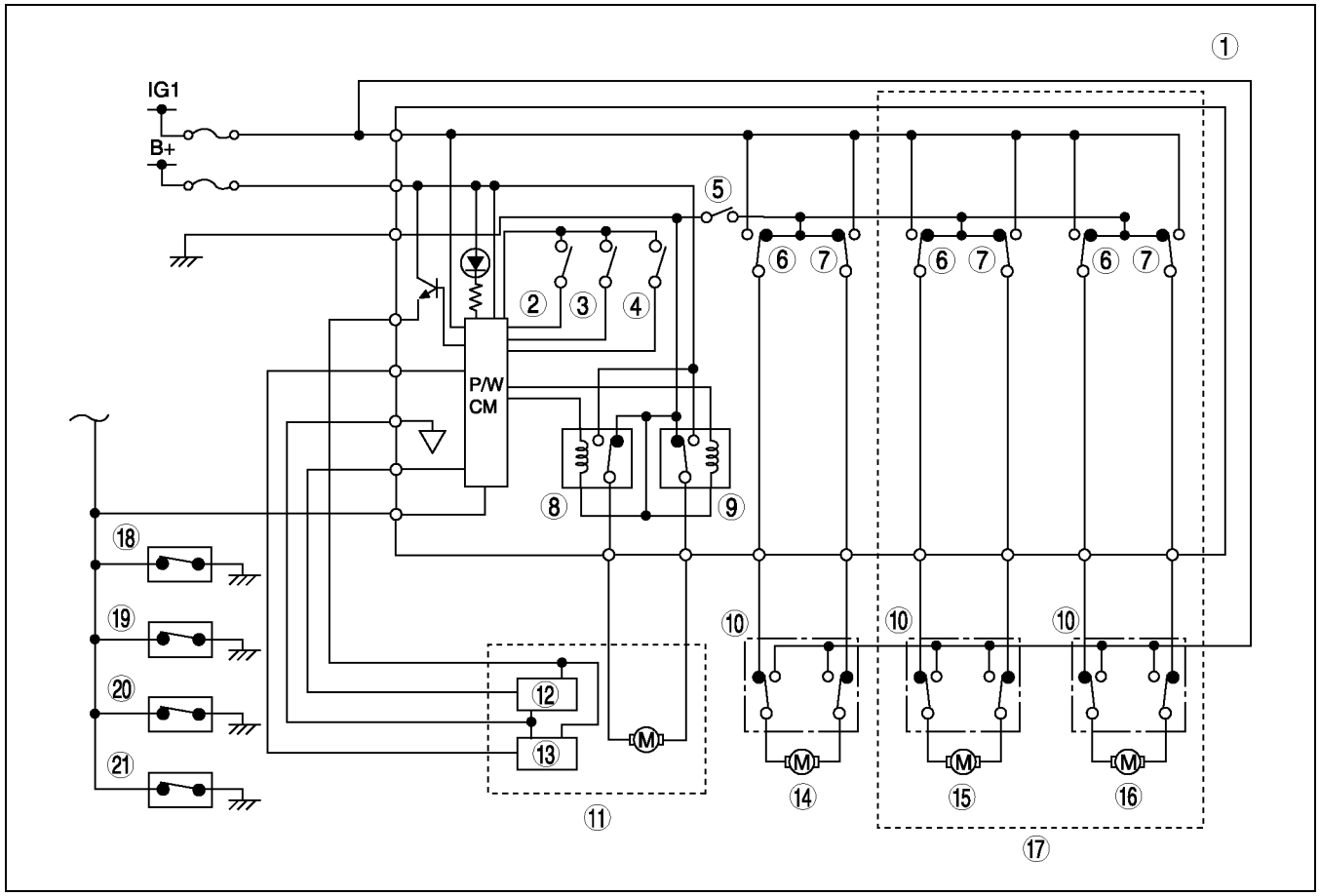

1	Power window main switch
2	Manual close
3	Manual open
4	Auto
5	Power-cut switch
6	Close
7	Open
8	Close relay
9	Open relay
10	Power window subswitch
11	Front power window motor (Driver's side)

12	Hall effect switch No. 1
13	Hall effect switch No. 2
14	Front power window motor (Passenger's side)
15	Rear power window motor (Right side)
16	Rear power window motor (Left side)
17	With rear power window system
18	Door switch (Driver's side)
19	Door switch (Passenger's side)
20	Door switch (Rear right side)
21	Door switch (Rear left side)

S

DRIVER SIDE POWER WINDOW SYSTEM

A6E771658000T04

Outline

- On the basis of the pulse signals from the Hall effect switches in the power window motor, the power window control module in the power window main switch determines the window position and the operation direction. Accordingly, the power window main switch controls the driver-side power window system.
- When the initial position is set before vehicle delivery, the window position and the operation direction are stored in the power window control module in the power window main switch. Thus resetting the initial position is necessary if the battery negative cable, power window main switch connector, or power window motor connector is disconnected.

Note

- If the initial position has not been set, the driver-side power window system's auto function, the auto window return function and the precise motion function will not function.
- See the workshop manual for more information about setting the initial position. (Mazda6 Training Manual 3359-1*-02C)

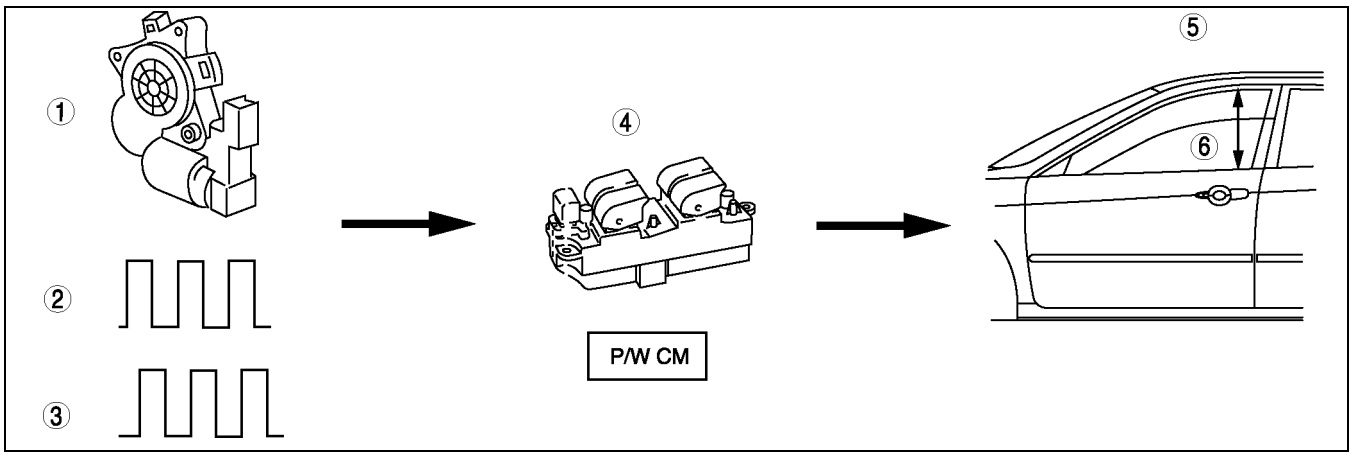

A6E7716T002

1	Power window motor
2	Pulse A
3	Pulse B

4	Power window main switch
5	Driver's side door
6	Open/close

Fail-safe Function

Detection Condition	Fail-safe		Recovery Items
	IG switch ON	IG switch OFF	
Hall effect switch No. 1 (for jam-safe and door glass position detection) operation malfunction • During up/down movement, Hall effect switch No. 2 pulse detected but Hall effect switch No. 1 pulse not detected.	Automatic operation is prohibited.	Automatic and manual operation are prohibited.	During up movement, pulse signals for Hall effect switches No. 1 and No. 2 are detected normally and fully closed position and return/non-return ranges are redetected.
Hall effect switch No. 2 (for door glass movement direction detection) operation malfunction • During up/down movement, Hall effect switch No. 1 pulse detected but Hall effect switch No. 2 pulse not detected.			
Pulse signal malfunction detection (Inversion of input signals of, or large phase deviation between, Hall effect switches No. 1 and No. 2.) • During up/down movement, difference detected between the direction detection signals from Hall effect switches No. 1 and No. 2, and the actual direction.			
Non-return range downturn malfunction • During up movement, the signal input from Hall effect switch No. 1 was higher than the position stored in the P/W main switch.			
Hall effect switches No. 1 and No. 2 operation malfunction • Hall effect switches No. 1 and No. 2 pulse signal not detected after down movement was initiated from the fully closed position.			

POWER WINDOW MOTOR

A6E771658000T05

Structure and Operation

- The power window motor consists of a motor, connector and gear.
- Two Hall effect switches are set in the connector.
- The Hall effect switch utilizes magnets set on a rotating axis to sense the power window motor rotation, and outputs a synchronized pulse to the power window main switch.
- Hall effect switch No. 1 outputs one pulse cycle for each rotation of the power window motor axle. Accordingly, the power window main switch detects the rotational speed of the power window motor.
- The power window main switch detects the rotational direction of the power window motor by the difference between high and low pulse points from each Hall effect switch No. 1 and 2.

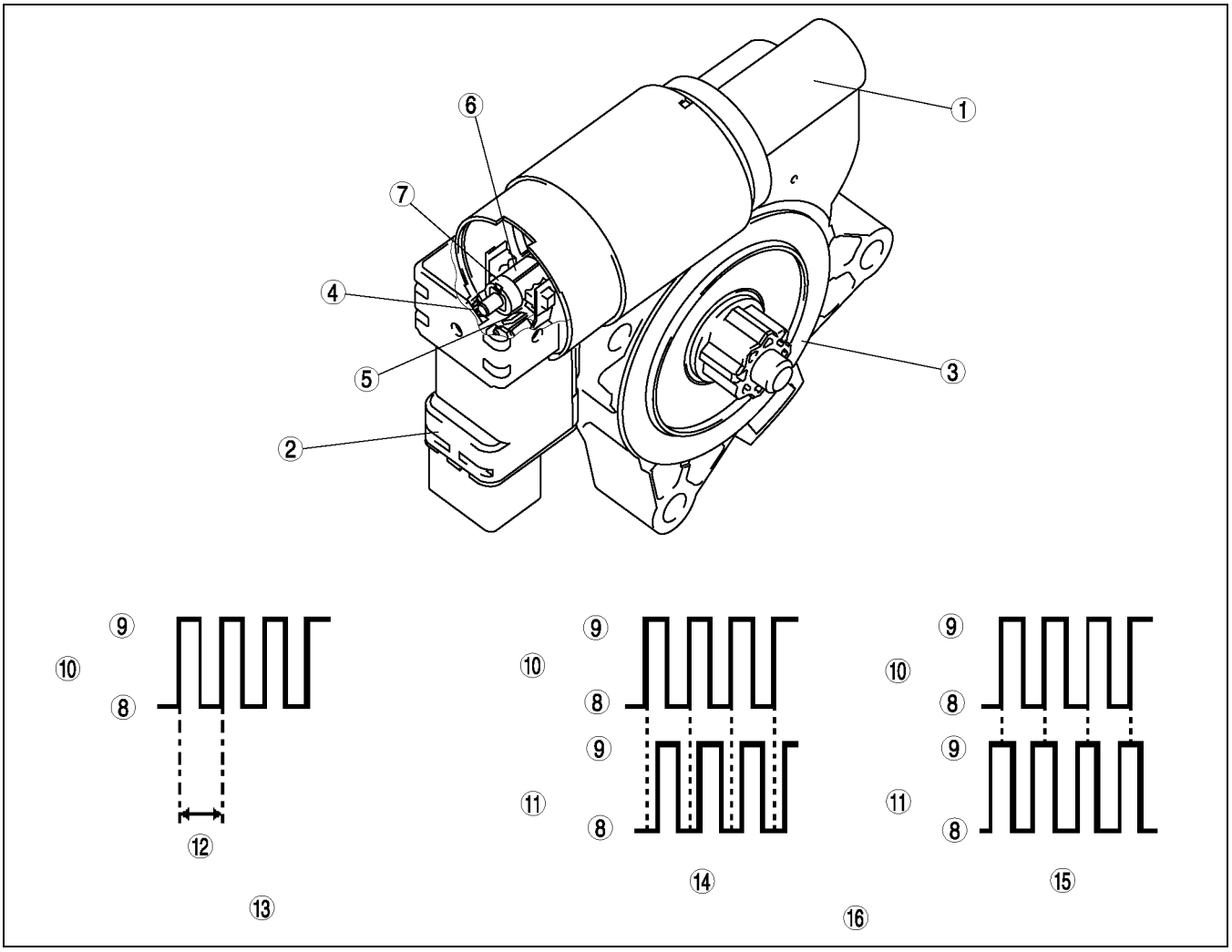

A6E7716T004

1	Motor
2	Connector
3	Gear
4	Hall effect switch No.1
5	Hall effect switch No.2
6	Shaft
7	Magnet
8	Low

9	High
10	Pulse (Hall effect switch No.1)
11	Pulse (Hall effect switch No.2)
12	One revolution of power window motor
13	Detection of window movement distance
14	Up
15	Down
16	Detection of window movement direction

POWER DOOR LOCK SYSTEM

OUTLINE

A6E771866000T01

- The keyless unit and the door lock timer unit have been integrated.
- The power door lock system has the following functions. These functions are the same as those of current MPV (LW).
- An interior light control system has been added as the keyless unit and the door lock timer unit were integrated. This function is the same as thatof current MPV (LW).

×: Applied
–: Not applied

Function		European (L.H.D.) specs.	U.K. specs.	GCC specs.
Double lock function		×	×	–
Passenger's side power door lock system (only vehicles without keyless entry system)		×	×	–
Keyless entry system	Auto lock function	×	×	–
	Answer back function	×	×	–
Keyless lock cancel function		×	×	×
Interior light control function		×	×	×

- The intrusion sensor cancel button has been adopted for the transmitter. For details, See T–47 INTRUDER SENSOR.
- The double lock function is same as that of current MPV (LW) with the exception of the following items.
  — The key cylinder switch is built in the door latch.

STRUCTURAL VIEW

A6E771866000T02

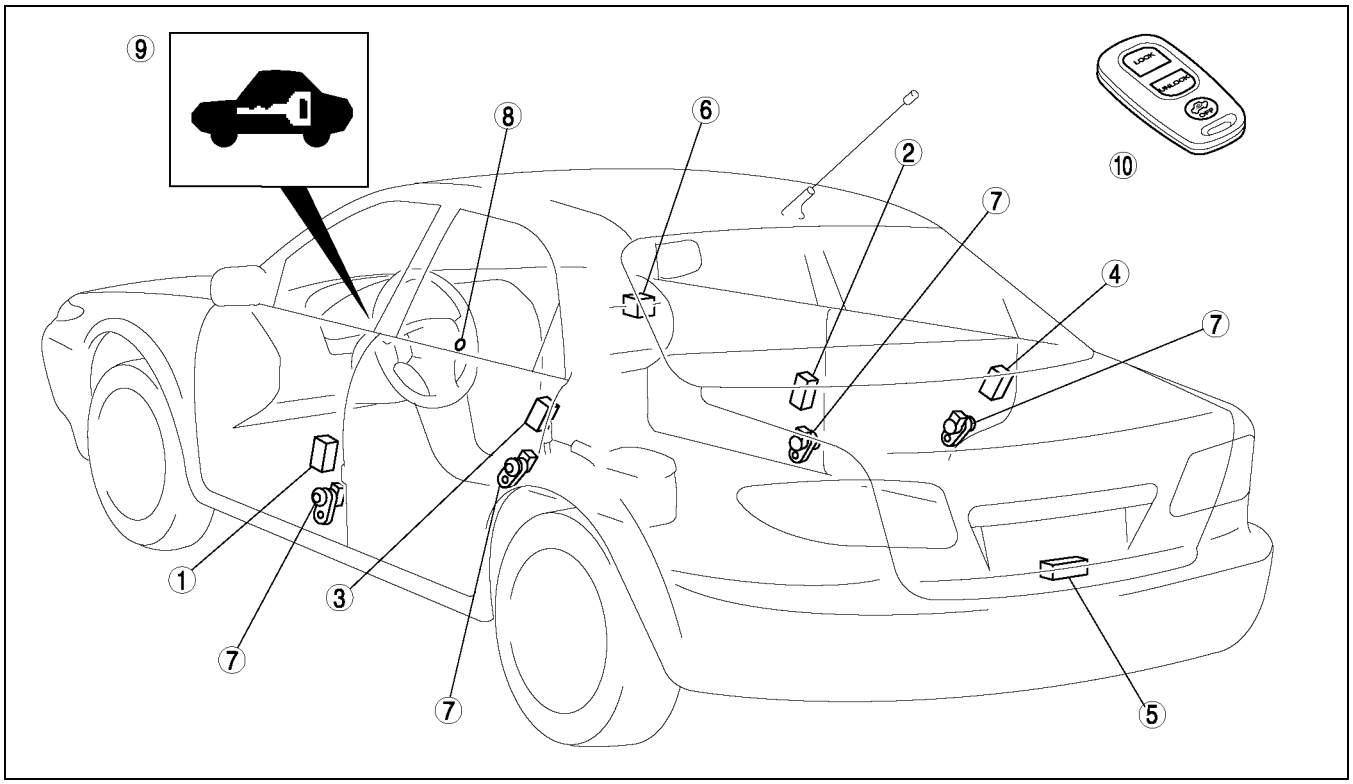

A6E7718T001

1	Door lock actuator (driver's side: door lock-link switch, key cylinder switch)
2	Door lock actuator (passenger's side; key cylinder switch)
3	Door lock actuator (rear left)
4	Door lock actuator (rear right)

5	• Trunk lid lock actuator (4SD) • Liftgate lock actuator (5HB)
6	Door lock timer unit
7	Door switch
8	Key reminder switch
9	Security light
10	Transmitter

SYSTEM WIRING DIAGRAM

A6E771866000T03

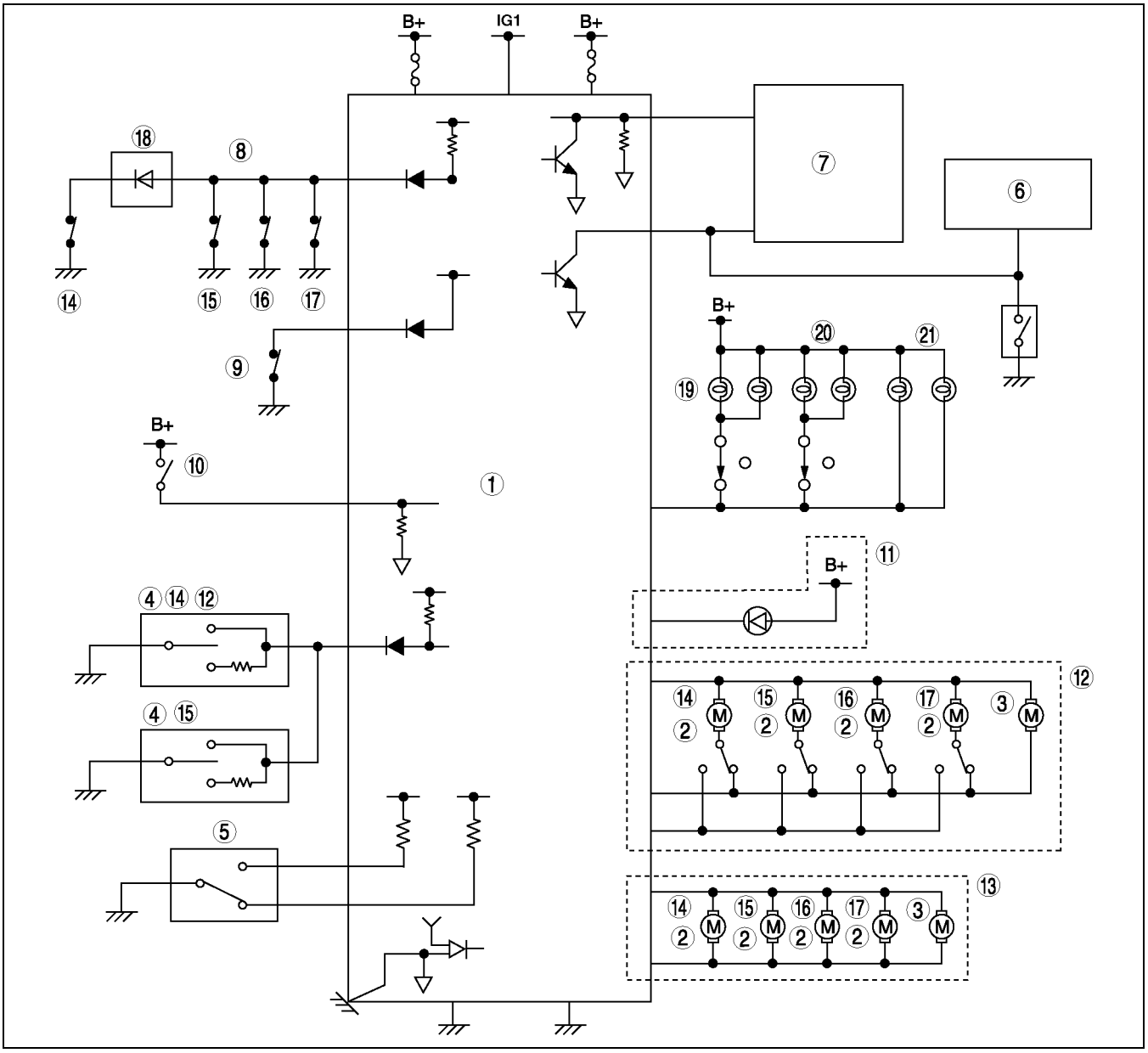

A6E7718T002

1	Door lock timer unit
2	Door lock actuator
3	• Trunk lid lock actuator (4SD) • Liftgate lock actuator (5HB)
4	Key cylinder switch
5	Door lock-link switch (Driver's side)
6	Flasher unit
7	Theft-deterrent control module
8	Door switch
9	Cargo compartment light switch
10	Key reminder switch

11	Security light
12	With double locking system
13	Without double locking system
14	Driver's side
15	Passenger's side
16	Rear left
17	Rear right
18	Instrument cluster
19	Front map light
20	Front map light
21	Courtesy light

KEYLESS ENTRY SYSTEM

A6E771869000T01

Outline

- The keyless entry system is also controlled by the door lock timer unit as the keyless unit and the door lock timer unit have been integrated.

LIFTGATE LOCK ACTUATOR

A6A771862310T01

Outline

- Models equipped with the keyless entry system do not have a liftgate key cylinder. If there are malfunctions in the keyless entry system with the liftgate locked, the liftgate cannot be unlocked. Instead, the liftgate lock actuator can be unlocked manually from a newly- adopted access hole on the liftgate lower trim.

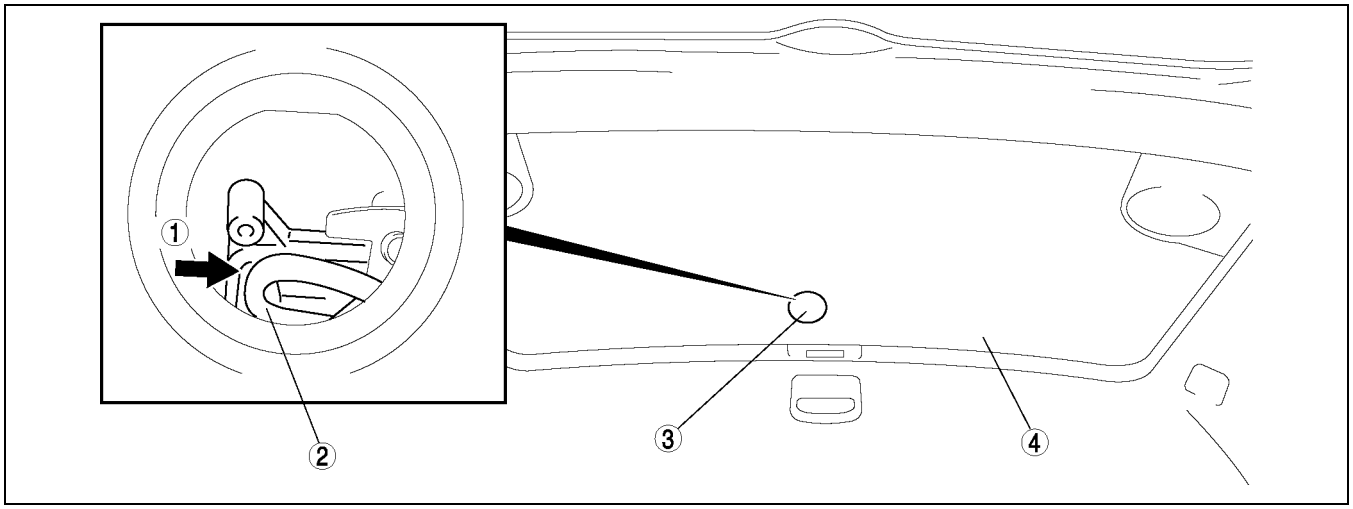

A6A7718TS01

1	Press
2	Link plate

3	Access hole
4	Liftgate lower trim

Operation

- The liftgate latch is switched from the lock to unlock position when the link plate is moved in the direction of arrow (2) after the link plate is pressed in the direction of arrow (1) .

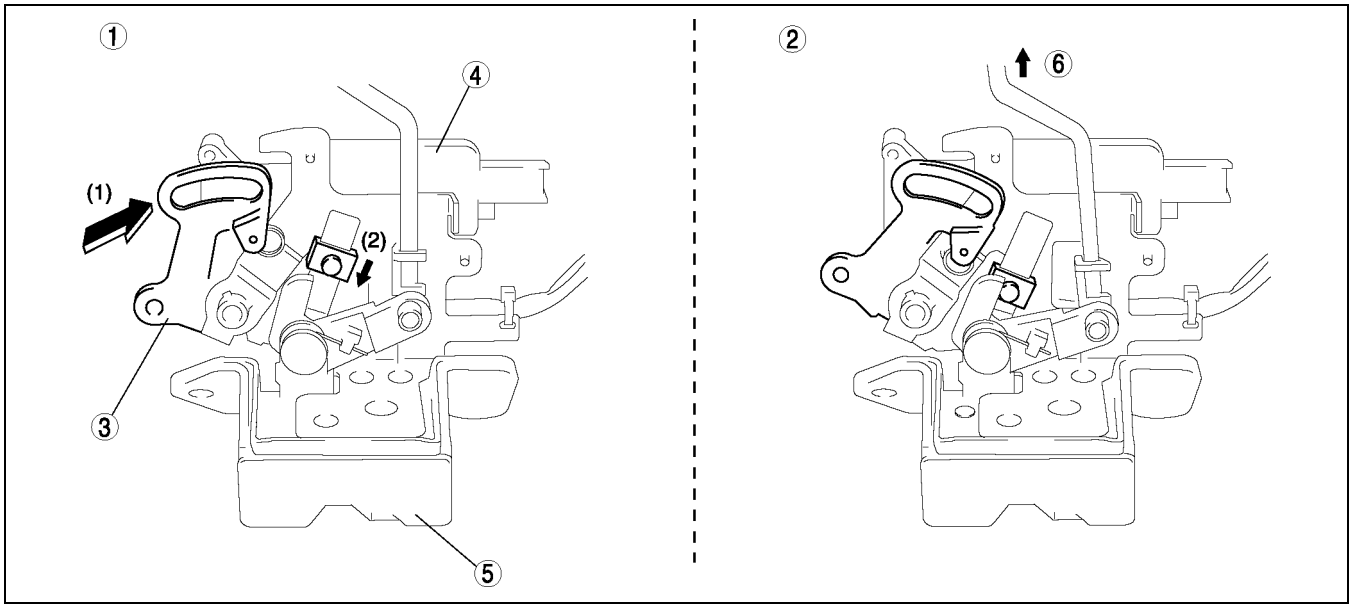

A6A7718TS02

1	Lock
2	Unlock
3	Link plate

4	Liftgate lock actuator
5	Liftgate latch
6	Outer handle

OUTSIDE MIRROR

OUTLINE

A6E773269110T01

- The function, structure and operation is the same as that of the current PREMACY (CP) model. (See PREMACY Training Manual 3336-1*-99C.)

STRUCTURAL VIEW

A6E773269110T02

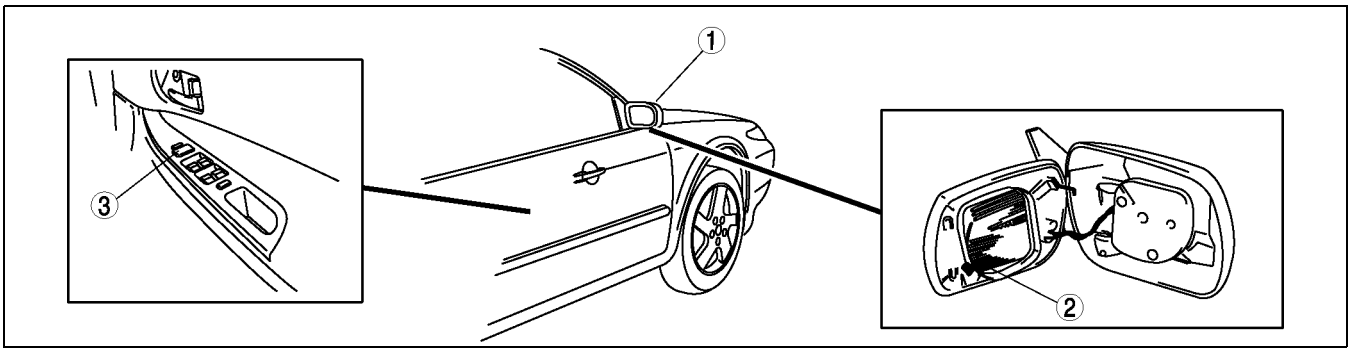

A6E7732T001

1	Power outside mirror
2	Heated filament
3	Power outside mirror switch

SYSTEM WIRING DIAGRAM

A6E773269110T03

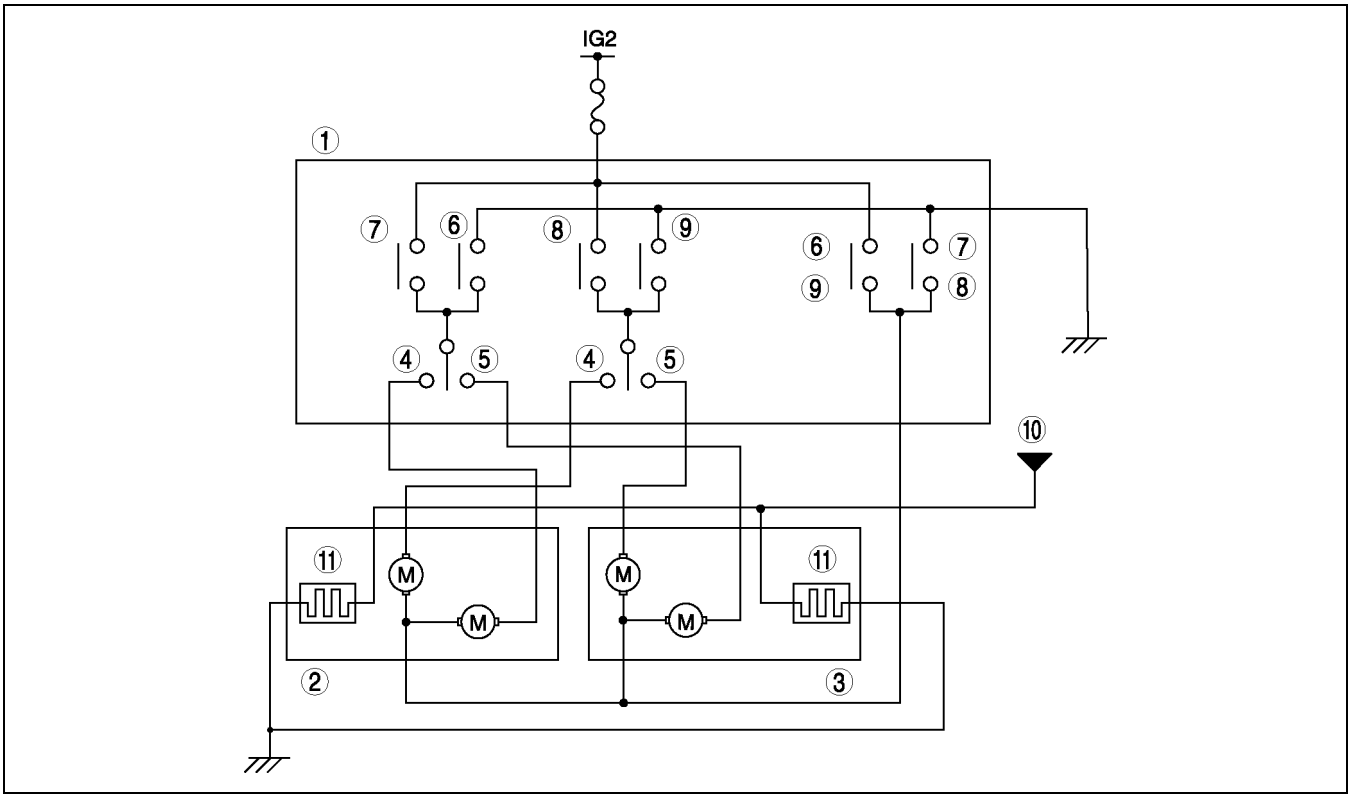

A6E7732T002

1	Power outside mirror switch
2	Power outside mirror (left side)
3	Power outside mirror (right side)
4	Left side
5	Right side
6	Right
7	Left
8	Up
9	Down
10	Rear defroster relay
11	Heated filament

REAR WINDOW DEFROSTER

OUTLINE

A6E773663000T01

- The function, structure and operation is the same as that of the current PREMACY (CP) model.

STRUCTURAL VIEW

A6E773663000T02

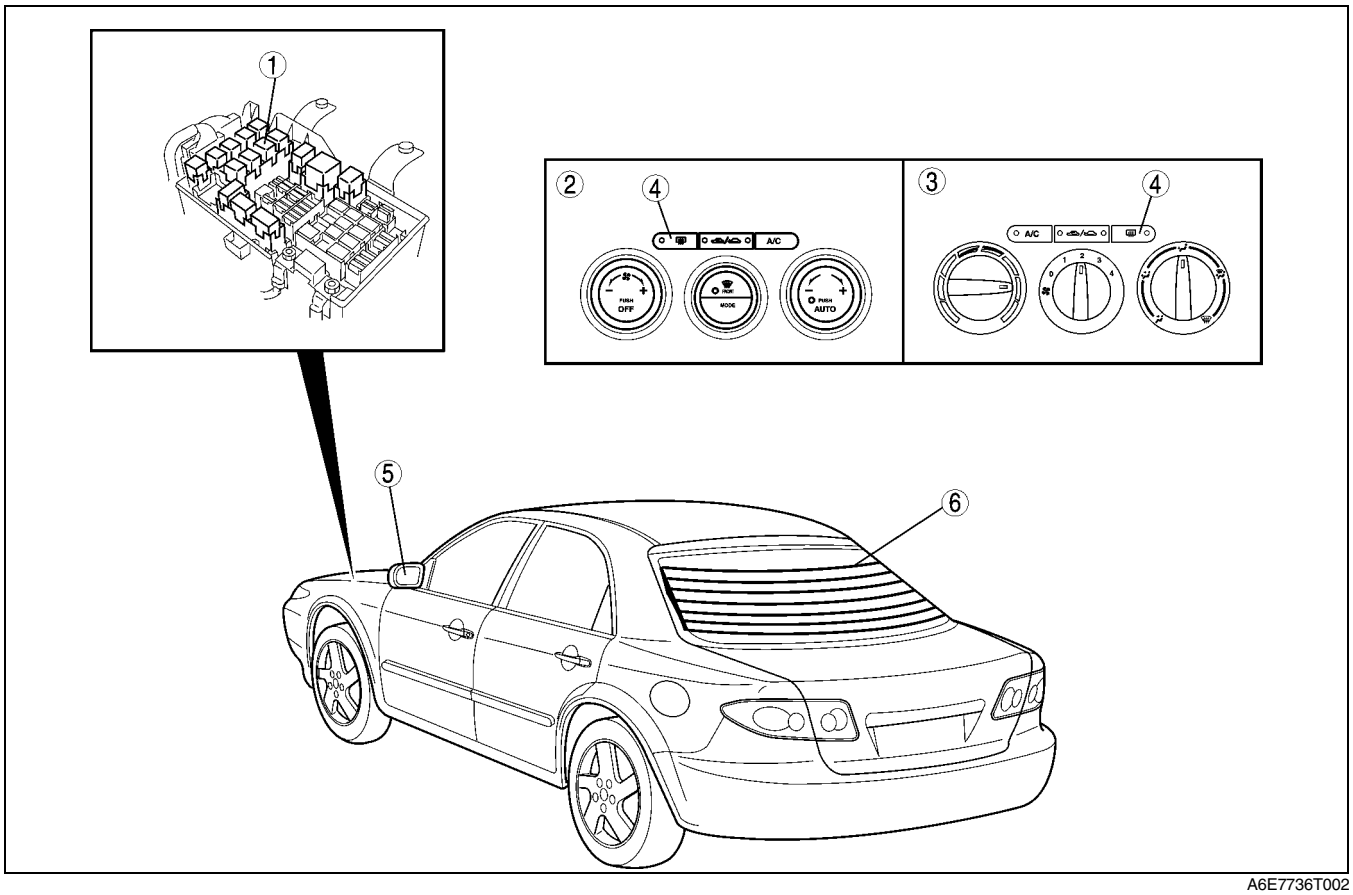

A6E7736T002

1	Rear window defroster relay
2	Climate control unit (full-auto air conditioner type)
3	Climate control unit (manual air conditioner type)

4	Rear window defroster switch
5	Heated outside mirror
6	Rear window defroster filament

SYSTEM WIRING DIAGRAM

A6E773663000T03

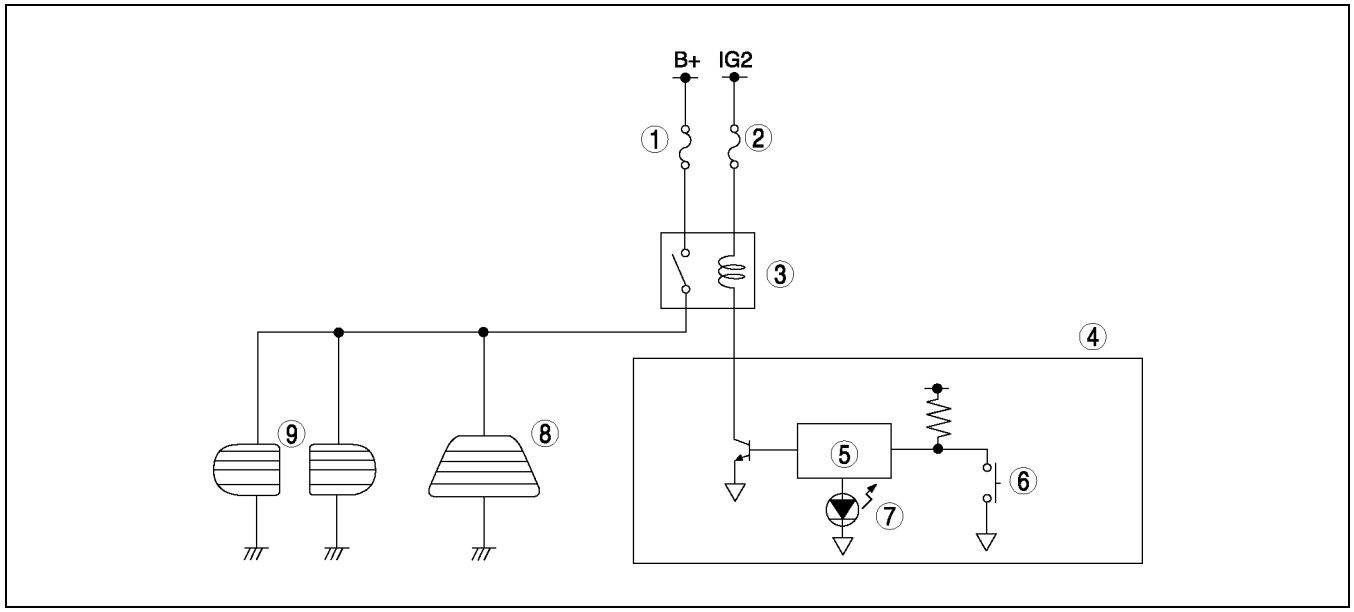

A6E7736T001

1	DEFOG 40 A fuse
2	METER IG 15 A fuse
3	Rear defroster relay
4	Climate control unit
5	Microcomputer

6	Rear defroster switch
7	Rear defroster indicator light
8	Rear window defroster
9	Heated outside mirror

S

SLIDING SUNROOF

OUTLINE

A6E774001049T01

- The construction and operation (slide open/close and tilt up/down) are the same as the 626 (GF) 5HB model.

×: Available
–: Not available

Item	Mazda6 (GG)	626 (GF) 5HB
Slide open/close function	×	×
Auto-stop function (when closing)	–	×
Tilt up/down function	×	×
Number of limit switch	3	←
Sliding amount (mm {in})	285 {11.2}	360 {14.1}
Tilt up amount (mm {in})	28 {1.1}	←

STRUCTURAL VIEW

A6E774001049T02

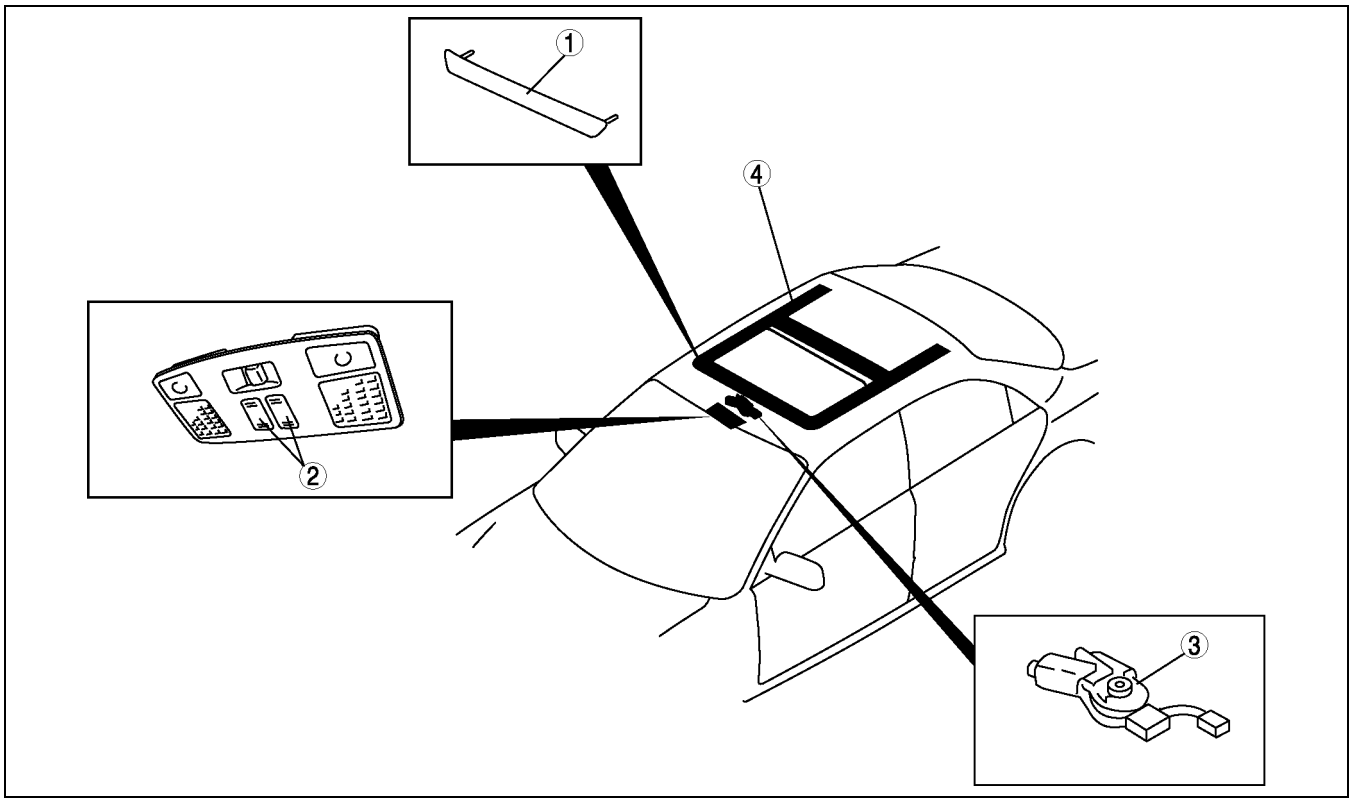

A6E7740T001

1	Deflector	3	Sunroof motor
2	Sunroof switch	4	Sunroof unit

SYSTEM WIRING DIAGRAM

A6E774001049T03

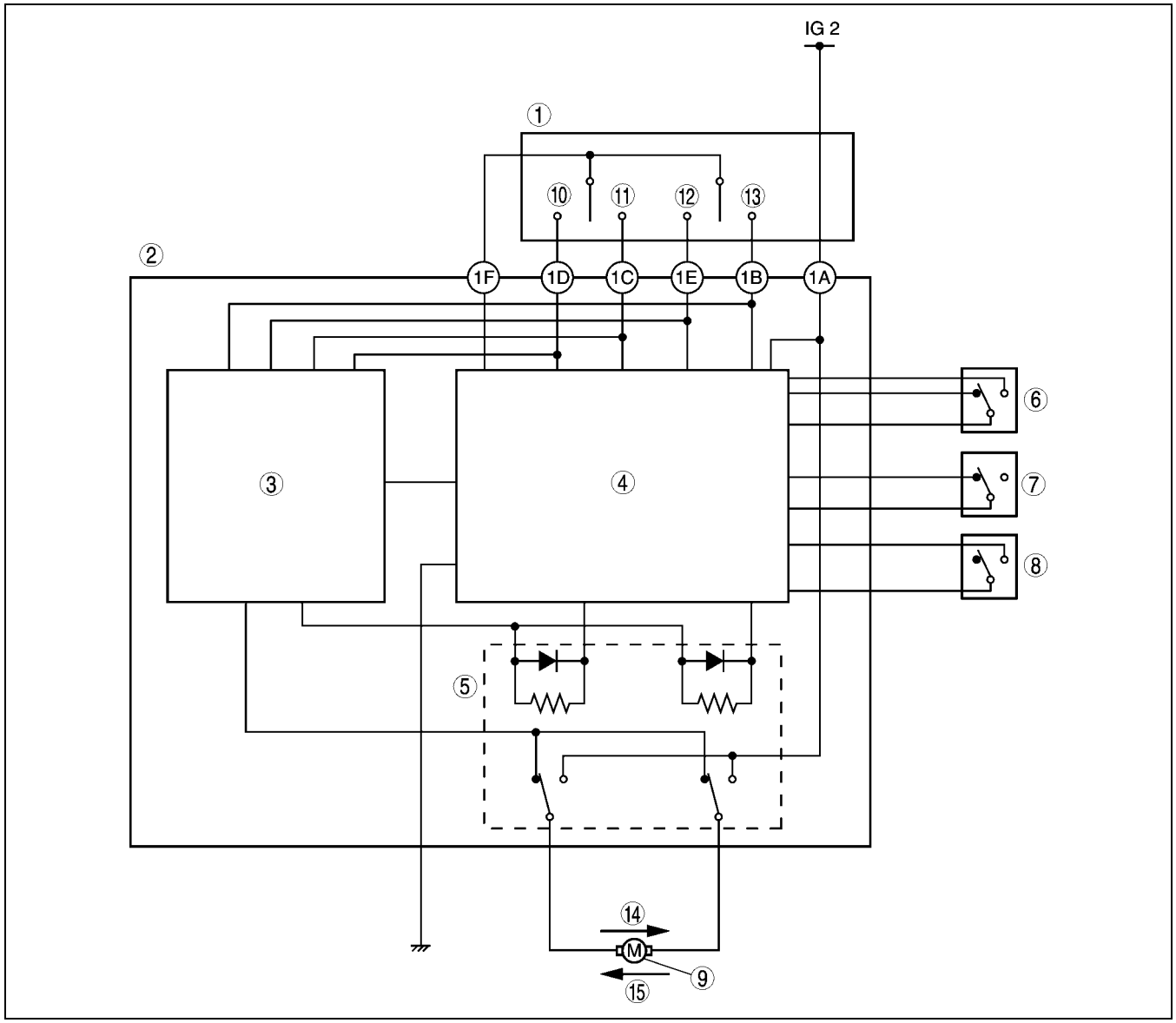

A6E7740T002

1	Sunroof switch
2	Sunroof relay
3	Motor control circuit
4	Motor lock current detection circuit
5	Relay
6	Limit switch No. 1
7	Limit switch No. 2
8	Limit switch No. 3

9	Sunroof motor
10	Slide open
11	Slide close
12	Tilt down
13	Tilt up
14	Slide open/tilt down
15	Slide close/tilt up

DASHBOARD AND CONSOLE

OUTLINE

A6E774255000T01

- The center module, which integrates the audio and climate control units, is located at the center of the dashboard panel. This improves the functionality and gives it a unified appearance.
- Various storage spaces have been kept.

STRUCTURAL VIEW

A6E774255000T02

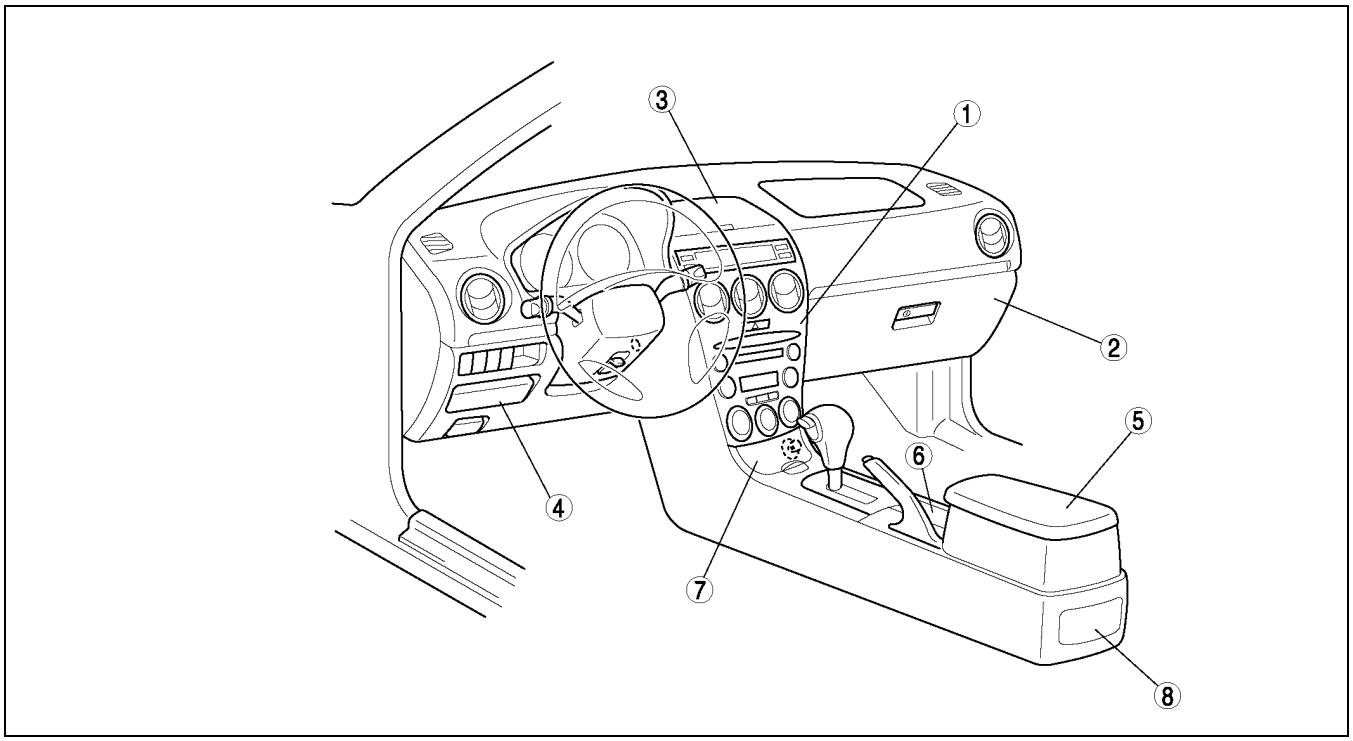

A6E7742T001

1	Center module
2	Glove compartment
3	Center box (without car-navigation system)
4	Storage pocket

5	Console box
6	Cup holder
7	Front ashtray
8	Rear ashtray

SEAT

OUTLINE

A6E775257100T01

Front Seat

- Three types of seats are available:
  — Manual seat with seat lifter (driver's side)
  — Manual seat without seat lifter (passenger's side)
  — Power seat
- A lumber support has been adopted for driver's seat.

Rear seat

- An easy fold-down function has been adopted.
- Child restraint seat anchors have been adopted. There are two types of anchors used for child restraint systems: the ISOFIX and tether strap anchors.

Specifications

×: Available
–: Not available

Item			Body type	
			4SD	5HB
Front seat	Type	Manual	×	×
		Power	×	×
	Lumber support (Driver's side only)		×	×
	Seat lifter (Driver's side only)		×	×
	Side air bag		×	×
Rear seat	Easy fold-down type	Remote handle lever	×	×
		Push knob	–	×
	Child restraint seat anchor type	ISOFIX	×	×
		Tether strap	×	×
	Armrest		×	×

S

STRUCTURAL VIEW

A6E775257100T02

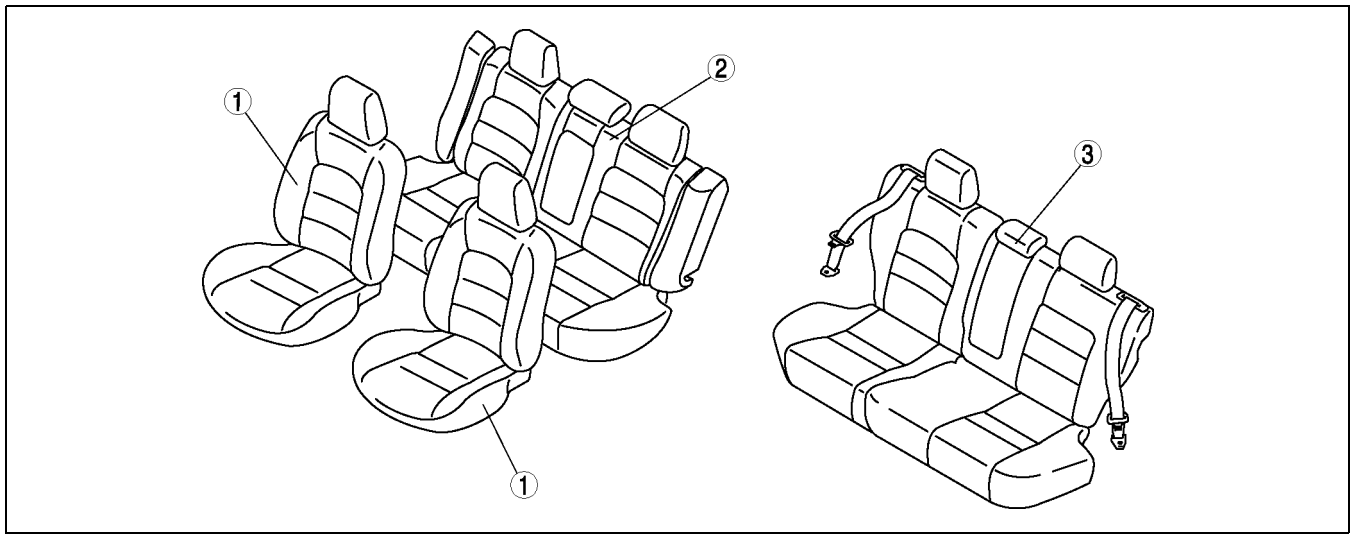

A6E7752T001

1	Front seat
2	Rear seat (4SD)
3	Rear seat (5HB)

FRONT SEAT

A6E775257100T03

Outline

- Three types of seats are available.
  - — Manual seat with seat lifter (Driver's side)
  - — Manual seat without seat lifter (Passenger's side)
  - — Power seat (Driver's side)
- A lumber support has been adopted for driver's seat.
- The function and operation of the power seat is basically the same as the current MELLENIA (TA) model.

Structural View

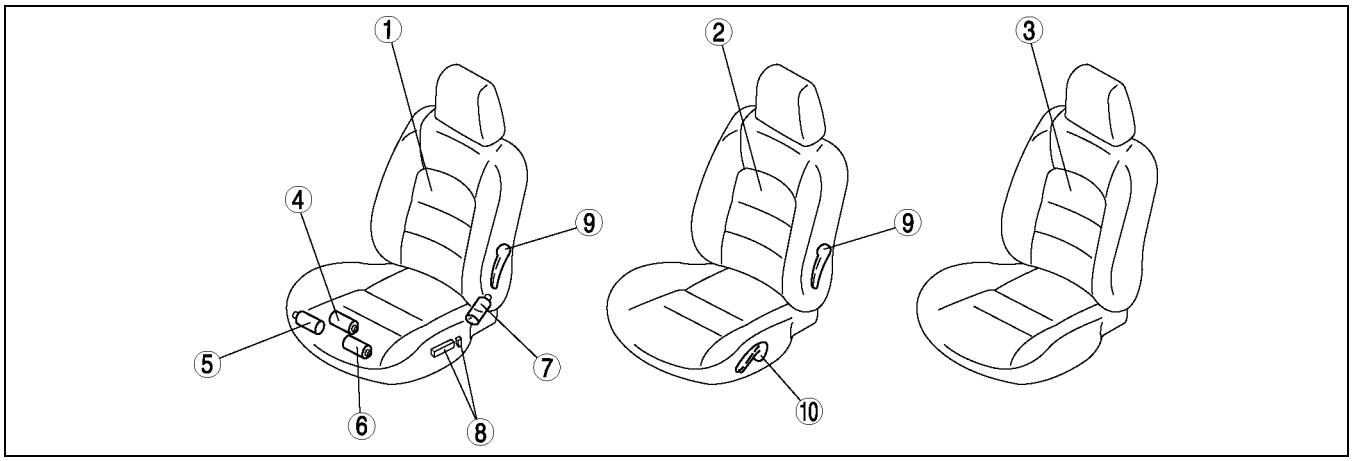

A6E7752T002

1	Power seat (Driver's side)
2	Manual seat with seat lifter (Driver's side)
3	Manual seat without seat lifter (Driver's side)
4	Slide motor (With power seat)
5	Rear tilt motor (With power seat)

6	Front tilt motor (With power seat)
7	Recliner motor (With power seat)
8	Power seat switch (With power seat)
9	Lumber support lever (Driver's side only)
10	Seat lifter lever (Driver's side only)

REAR SEAT

A6E775257200T01

Outline

- An easy fold-down function has been adopted.
- Child restraint seat anchors have been adopted. There are two types of anchors used for child restraint systems: the ISOFIX and tether strap anchors.

Caution

- **Installation procedure varies with the type of child restraint seat. When installing a child restraint seat, be sure to follow the prescribed procedure for each type.**
- **A child restraint seat using a tether strap cannot be completely secured with only the tether strap. Use an ISOFIX anchor, or a rear seat belt in conjunction with the anchor used with the tether strap.**

Structural View

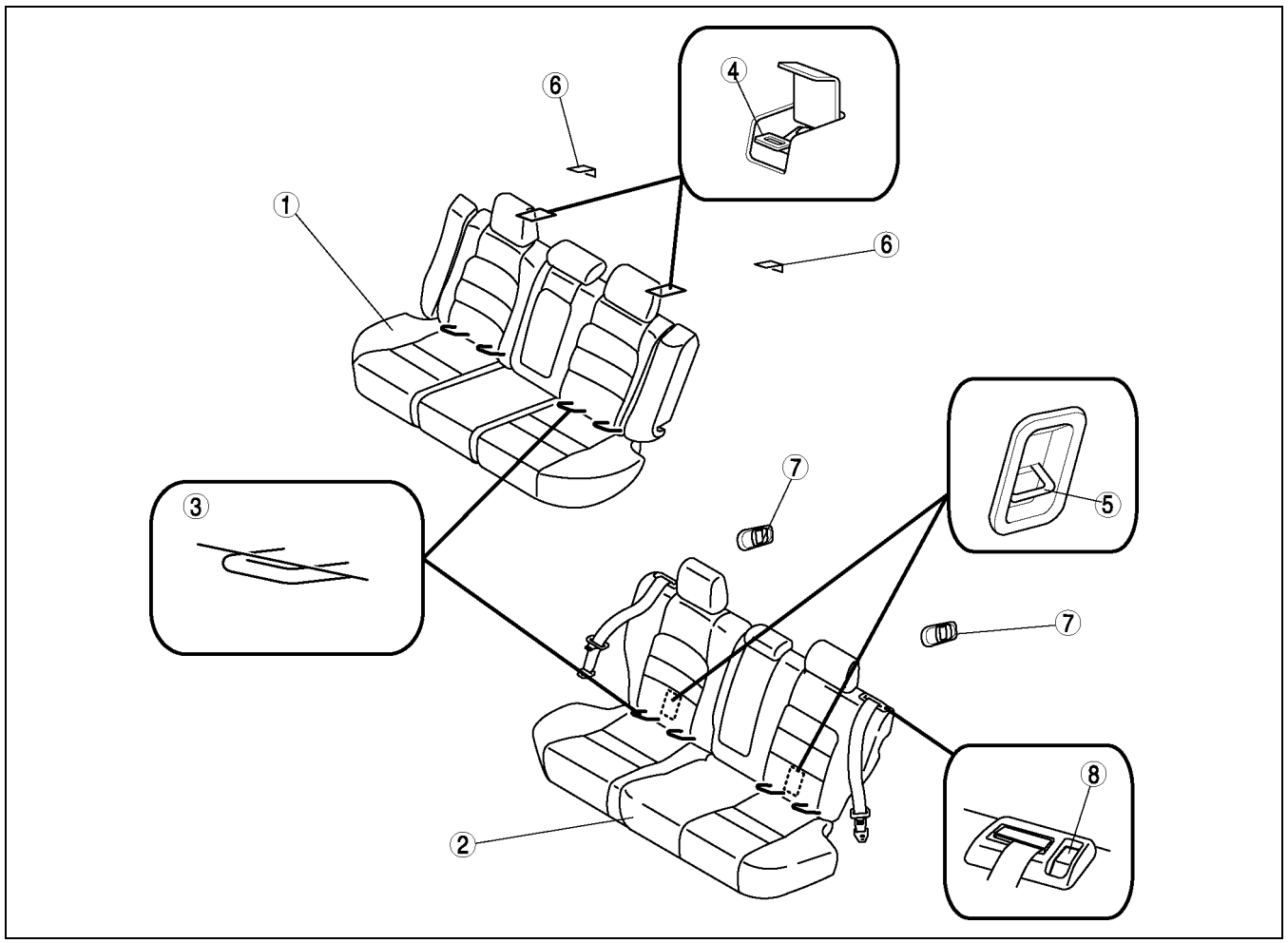

A6E7752T003

1	Rear seat (4SD)
2	Rear seat (5HB)
3	ISOFIX anchor
4	Tether strap anchor (4SD)

5	Tether strap anchor (5HB)
6	Remote handle lever (4SD)
7	Remote handle lever (5HB)
8	Push knob (5HB)

EASY FOLD-DOWN FUNCTION

A6E775257200T02

Outline

- Operating the remote handle lever or the push knob (5HB only), automatically folds down the seat for extra cargo space.

Operation

4SD

1. When the remote handle lever is operated, the seat back catch unlocks via the wire.
2. The unlocked seat back folds forward under its own weight.

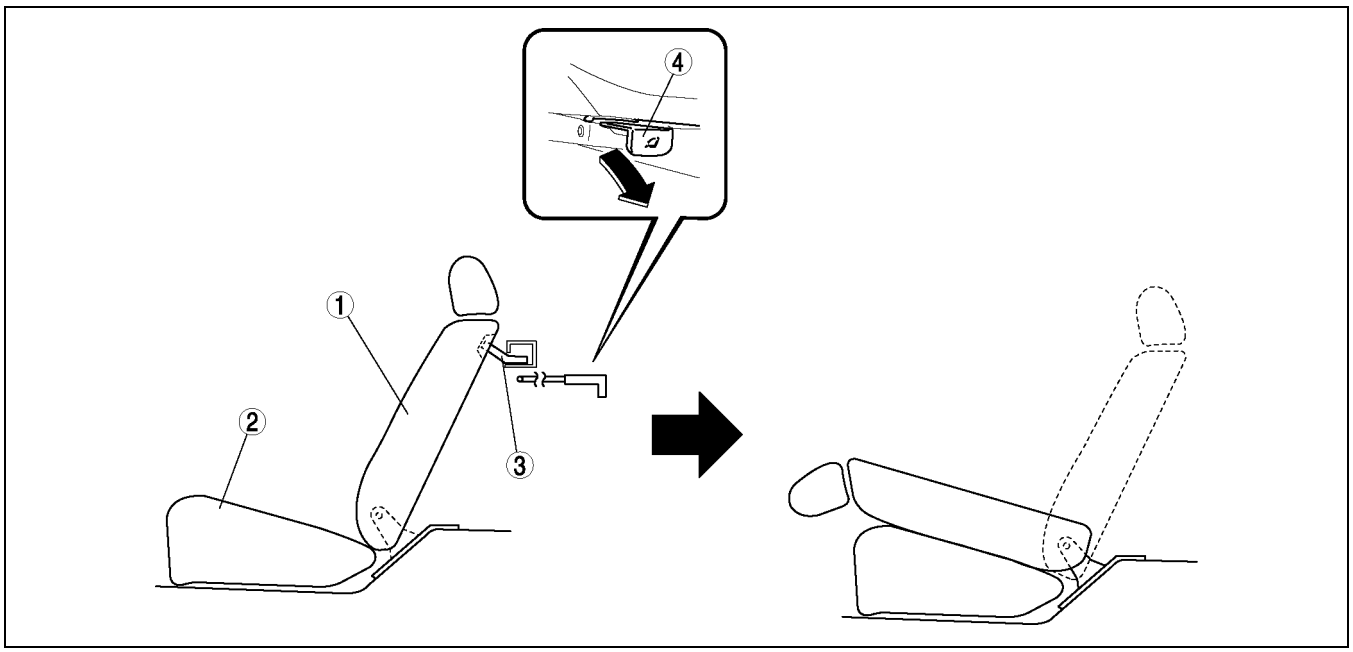

A6E7752T004

1	Rear seat back
2	Rear seat cushion

3	Catch
4	Remote handle lever

5HB

1. When the remote handle lever or push knob is operated, the seat back catch unlocks via the wire.
2. The unlocked seat back folds forward under its own weight.
3. Continuing to press the seat back down causes the seat cushion hinge to fold in and the seat back to slide forward into the lower recess.

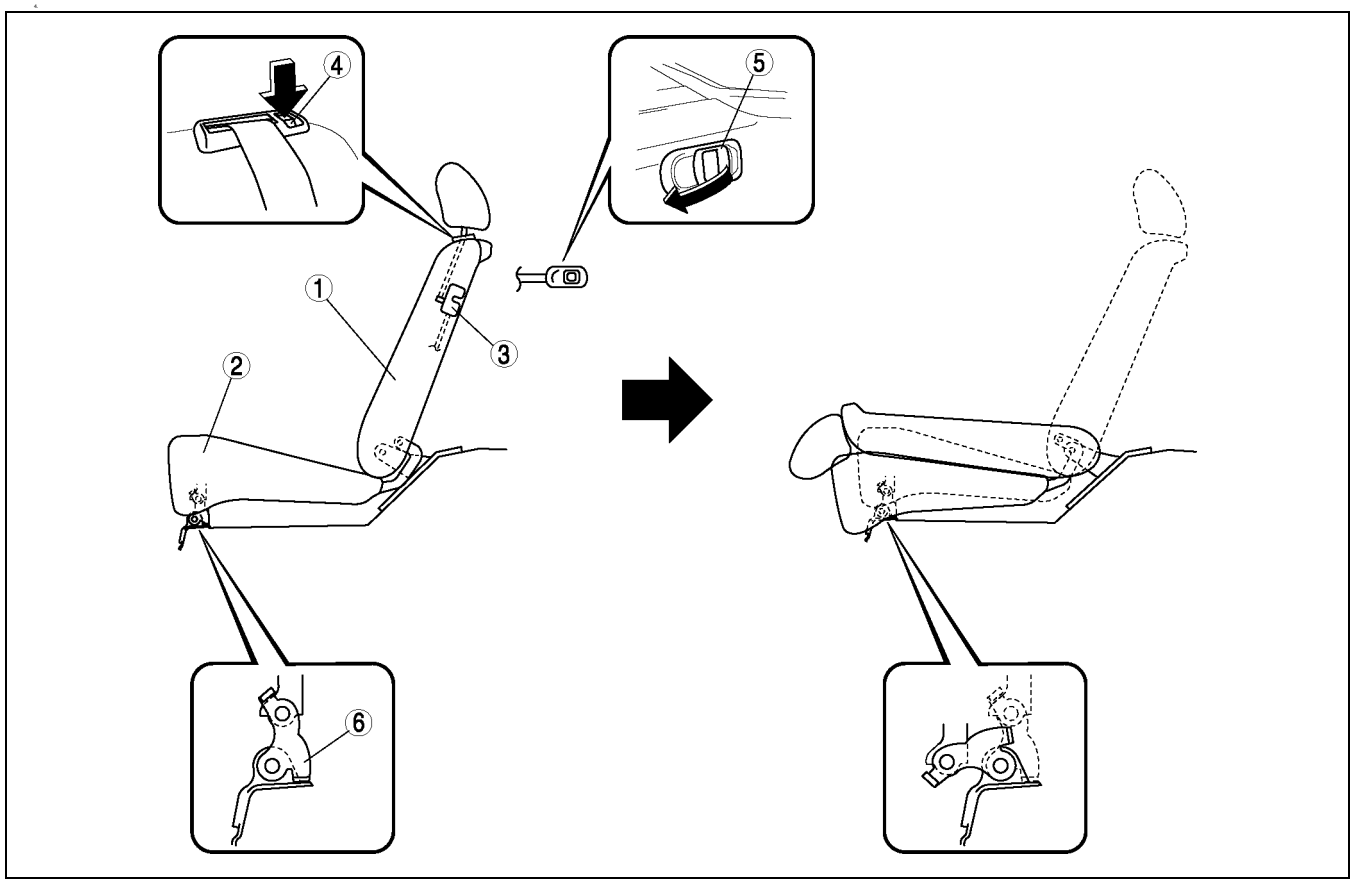

A6E7752T005

1	Rear seat back
2	Rear seat cushion
3	Seat back catch

4	Push knob
5	Remote handle lever
6	Seat cushion hinge

S

BODY SHELL

OUTLINE

A6E775407000T01

- The body shell has been designed to increase vehicle structural rigidity and reduce shock to the body, thus improving safety.
- The crushable zone, an H-shaped frame (triple-H structure), absorbs impact energy and prevents it from reaching the occupants.
- A steel bumper reinforcement has been adopted for improved safety.
- A resin shroud panel has been adopted for improved serviceability.

STRUCTURAL VIEW

A6E775407000T02

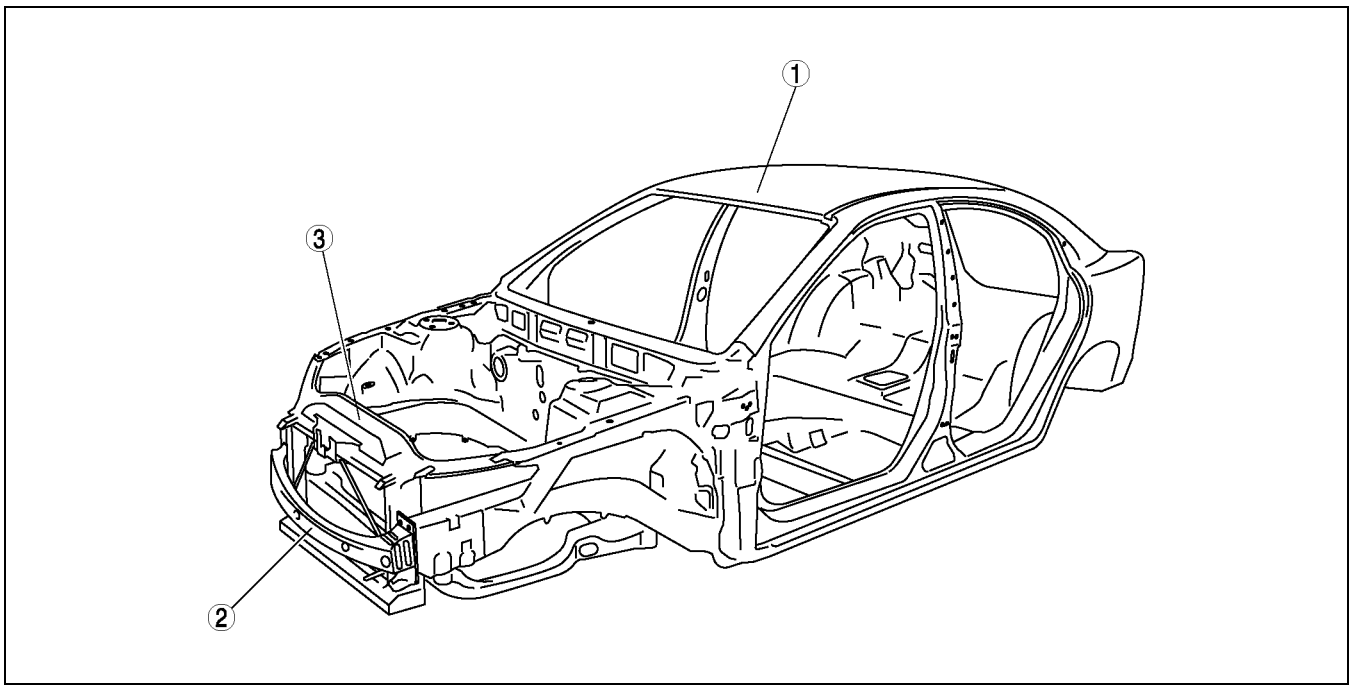

A6E7754T001

1	Body shell
2	Front bumper reinforcement

3	Shroud panel

CRUSHABLE ZONE

A6E775407000T03

- To reduce cabin damage, the front and rear of the frame are designed to deform when incurring an impact, and effectively absorb/disperse energy from a collision.
  - — In moderate collisions at the front bumper reinforcement, impact is diffused to the front side frames and front suspension members.
  - — If the collision comes close to the cabin, impact is diffused to the side sills and front B frames through the torque box, reducing impact to the cabin.

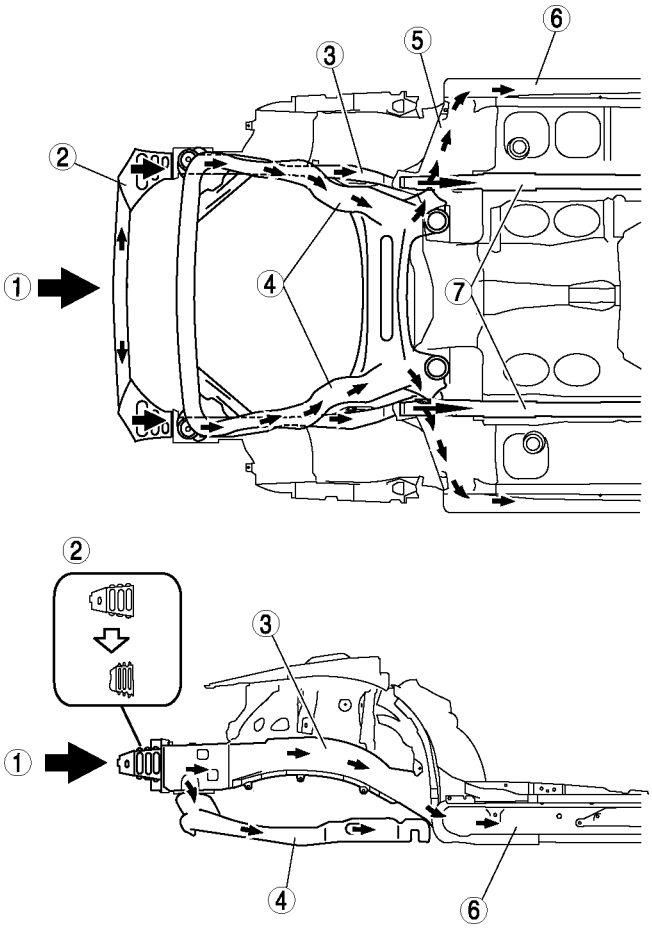

A6E7754T002

1	Collision energy
2	Front bumper reinforcement
3	Front side frame
4	Front crossmember

5	Torque box
6	Side sill
7	Front B-frame

S

CABIN

A6E775407000T04

- The floor, the side frame and the roof form three rigid, H-shaped frames (triple-H structure) that resist impact forces in the event of a side collision.
- Handling stability is improved by preventing body torsion.

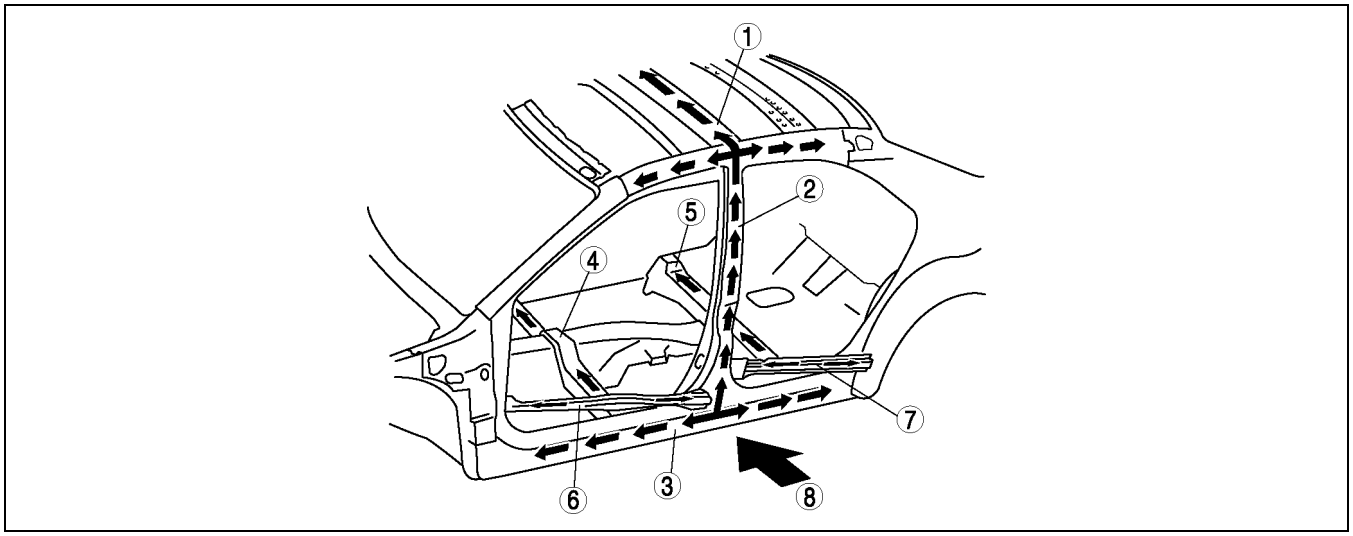

A6E7754T003

1	Roof reinforcement
2	B-pillar
3	Side sill
4	Crossmember No. 2

5	Crossmember No. 3
6	Front door impact bar
7	Rear door impact bar
8	Collision energy

SHROUD PANEL

A6E775453140T01

Outline

- The shroud panel is a glass-fiber impregnated strong plastic.
- Easily replaced for improved serviciblity.
- Recycled materials are used in consideration of the environment.

Structural View

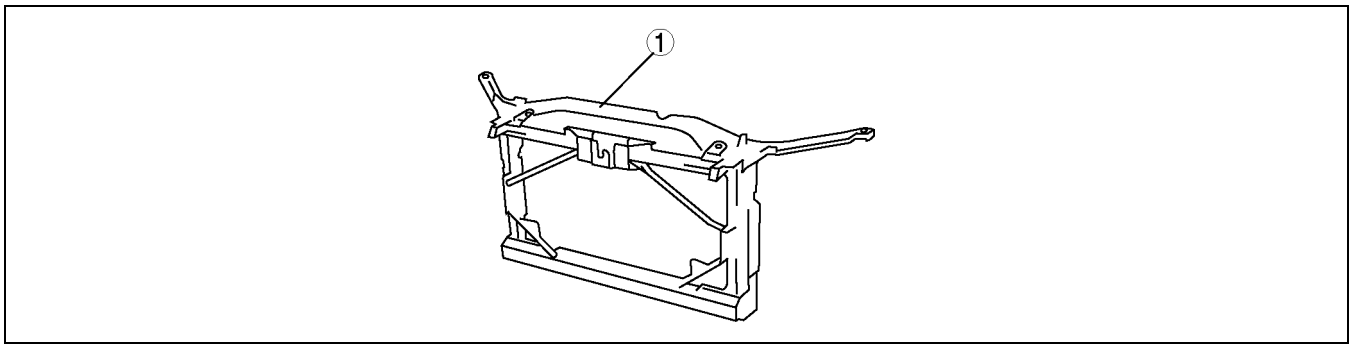

A6E7754T004

1	Shroud panel

FRONT BUMPER REINFORCEMENT

A6E775450031T01

Outline

- A large sectional form has been adopted for improved strength.
- The frame and connection area have adopted a crushable structure. At low-speed collisions, impact is absorbed and diffused, reducing impact to the frame and other parts.

Structural View

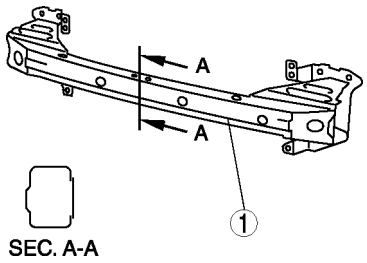

A6E7754T005

1	Front bumper reinforcement

S

BODY ELECTRICAL SYSTEM

ABBREVIATIONS T-2
ABBREVIATIONS T-2
OUTLINE T-3
OUTLINE OF CONSTRUCTION T-3
FEATURES T-3
POWER SYSTEM T-4
RELAY LOCATION T-4
MULITIPLE COMMUNICATION SYSTEM T-5
OUTLINE T-5
STRUCTRURAL VIEW T-5
SYSTEM WIRING DIAGRAM T-6
MECHANISM OF CAN SYSTE-RELATED MODULE T-6
TWIST PAIR T-7
CAN SYSTEM OUTLINE T-8
VEHICLE CAN SYSTEM T-8
CAN SIGNAL-CHART T-9
ON-BOARD DIAGNOSTIC FUNCTION T-10
EXTERIOR LIGHTING SYSTEM T-13
OUTLINE T-13
STRUCTURAL VIEW T-14
FRONT COMBINATION LIGHT T-15
DISCHARGE HEADLIGHT T-15
DISCHARGE HEADLIGHT CONTROL UNIT T-16
HEADLIGHT AUTO LEVELING SYSTEM T-17
AUTO LEVELING CONTROL UNIT T-20
RUNNING LIGHT SYSTEM T-21
REAR COMBINATION LIGHT AND INBOARD COMBINATION LIGHT T-25
INTERIOR LIGHTING SYSTEM T-26
STRUCTURAL VIEW T-26
OUTLINE T-27
INTERIOR LIGHT CONTROL SYSTEM T-28
WIPER AND WASHER T-30
OUTLINE T-30
STRUCTURAL VIEW T-31
WINDSHIELD WIPER SYSTEM (VEHICLE-SPEED SENSING TYPE) T-32
WARNING AND INDICATOR SYSTEM T-35
OUTLINE T-35
INSTRUMENT CLUSTER T-35
SYSTEM WIRING DIAGRAM T-37
INPUT/OUTPUT CHECK MODE T-39
PID/DATA MONITOR AND RECORD T-39
DRIVE INFORMATION SYSTEM T-40
HORN T-42
THEFT-DETERRENT SYSTEM T-43
OUTLINE T-43
STRUCTURAL VIEW T-43
SYSTEM WIRING DIAGRAM T-44
SYSTEM FLOWCHART T-45
THEFT-DETERRENT SIREN T-46
INTRUDER SENSOR T-47
IMMOBILIZER SYSTEM T-48
OUTLINE T-48
STRUCTURAL VIEW T-48
SYSTEM WIRING DIAGRAM T-49
AUDIO AND NAVIGATION SYSTEM T-49
OUTLINE (AUDIO SYSTEM) T-49
STRUCTURAL VIEW (AUDIO SYSTEM) T-50
BLOCK DIAGRAM (AUDIO SYSTEM) T-51
SPECIFICATIONS (AUDIO SYSTEM) T-52
CENTER PANEL MODULE T-53
AUDIO UNIT T-58
BASE UNIT T-58
AUTO LEVEL CONTROL (ALC) FUNCTION T-59
ON-BOARD DIAGNOSTIC SYSTEM (AUDIO SYSTEM) T-59
OUTLINE (CAR-NAVIGATION SYSTEM) T-63
STRUCTURAL VIEW (CAR-NAVIGATION SYSTEM) T-63
BLOCK DIAGRAM (CAR-NAVIGATION SYSTEM) T-64
SPECIFICATIONS (CAR-NAVIGATION SYSTEM) T-64
COMPONENT PART AND FUNCTIONS T-65
CAR-NAVIGATION UNIT T-66
LCD UNIT T-68
REMOTE CONTROL AND CRADLE T-70
NAVIGATION FUNCTION T-71
CRUISE CONTROL SYSTEM T-83
OUTLINE T-83
STRUCTURAL VIEW T-83
SYSTEM WIRING DIAGRAM T-84
CRUISE ACTUATOR T-85
ON-BOARD DIAGNOSTIC T-86
AIR BAG SYSTEM T-87
OUTLINE T-87
STRUCTURAL VIEW T-87
SYSTEM WIRING DIAGRAM T-88
SAS UNIT T-89
DRIVER-SIDE AIR BAG MODULE T-91
PASSENGER-SIDE AIR BAG MODULE T-92
SIDE AIR BAG MODULE T-93
CURTAIN AIR BAG MODULE T-94
PRE-TENSIONER SEAT BELT T-95
ON-BOARD DIAGNOSTIC FUNCTION T-97

ABBREVIATIONS

ABBREVIATIONS

A6E810101088T01

ABS	Antilock brake system
ACC	Accessories
ALC	Auto level control
ATX	Automatic transaxle
CAN	Controller area network
CM	Control module
CPU	Central processing unit
DIS	Drive information system
DRL	Daytime running light
DSC	Dynamic stability control
DTC	Diagnostic trouble code
EBD	Electronic brakeforce distribution
ECT	Engine coolant temperature
GPS	Global positioning system
HI	High
HU	Hydraulic unit
IG	Ignition
INT	Intermittent
LCD	Liquid crystal display
LED	Light emitting diode
LH	Left hand
L.H.D.	Left hand drive
LO	Low
MTX	Manual transaxle
PATS	Passive anti theft-system
PCM	Powertrain control module
PID	Parameter identification
RDS	Radio data system
RH	Right hand
R.H.D.	Right hand drive
SAS	Sophisticated air bag sensor
SEC.	Section
SST	Special service tool
TFT	Thin film transistor
TNS	Tail number side lights
TR	Transmission (Transaxle) range
4SD	4 door sedan
5HB	5 door hatchback

OUTLINE

OUTLINE OF CONSTRUCTION

A6E810201088T01

- The construction and operation of the body electrical system is essentially carried over from that of the 626 (GF) model, except the following features.

FEATURES

A6E810201088T02

Improved Serviceability

- A controller area network (CAN) system has been adopted for communication between the PCM, ABS (ABS/TCS) HU/CM or DSC HU/CM, and instrument cluster.
- Cruise actuator with built-in control module has been adopted.

Improved Marketability

- Headlight with built-in front fog light and front turn and parking light has been adopted.
- A projector type has been adopted to the headlight (low-beam) and front fog light.
- Stepped reflectors have been adopted to the rear combination lights and inboard combination lights.
- Information display has been adopted to instrument panel center.
- A vehicle-speed sensing type windshield wiper system has been adopted.
- Drive information system has been adopted to instrument cluster and information display
- Auto level control (ALC) function has been adopted to audio unit (base unit).
- Car-navigation system has been newly adopted.

Improved Security

- Theft-deterrent siren and intruder sensor have been adopted to theft-deterrent system.
- The current immobilizer unit function has been incorporated into the PCM as the passive anti-theft system (PATS).

Design Improvement

- A center panel module, which integrates the audio control, climate control and other units, has been adopted.

Improved Safety

- 2-step deployment control has been added to the front air bag system (driver- and passenger-side) deployment control.
- Curtain air bag module has been adopted.

Improved Visibility

- Discharge headlight have been adopted for the headlights (low beam). (For vehicles equipped with discharge headlights.)
- A headlight auto leveling system has been adopted. (For vehicles equipped with discharge headlights.)

POWER SYSTEM

RELAY LOCATION

A6E811067730T01

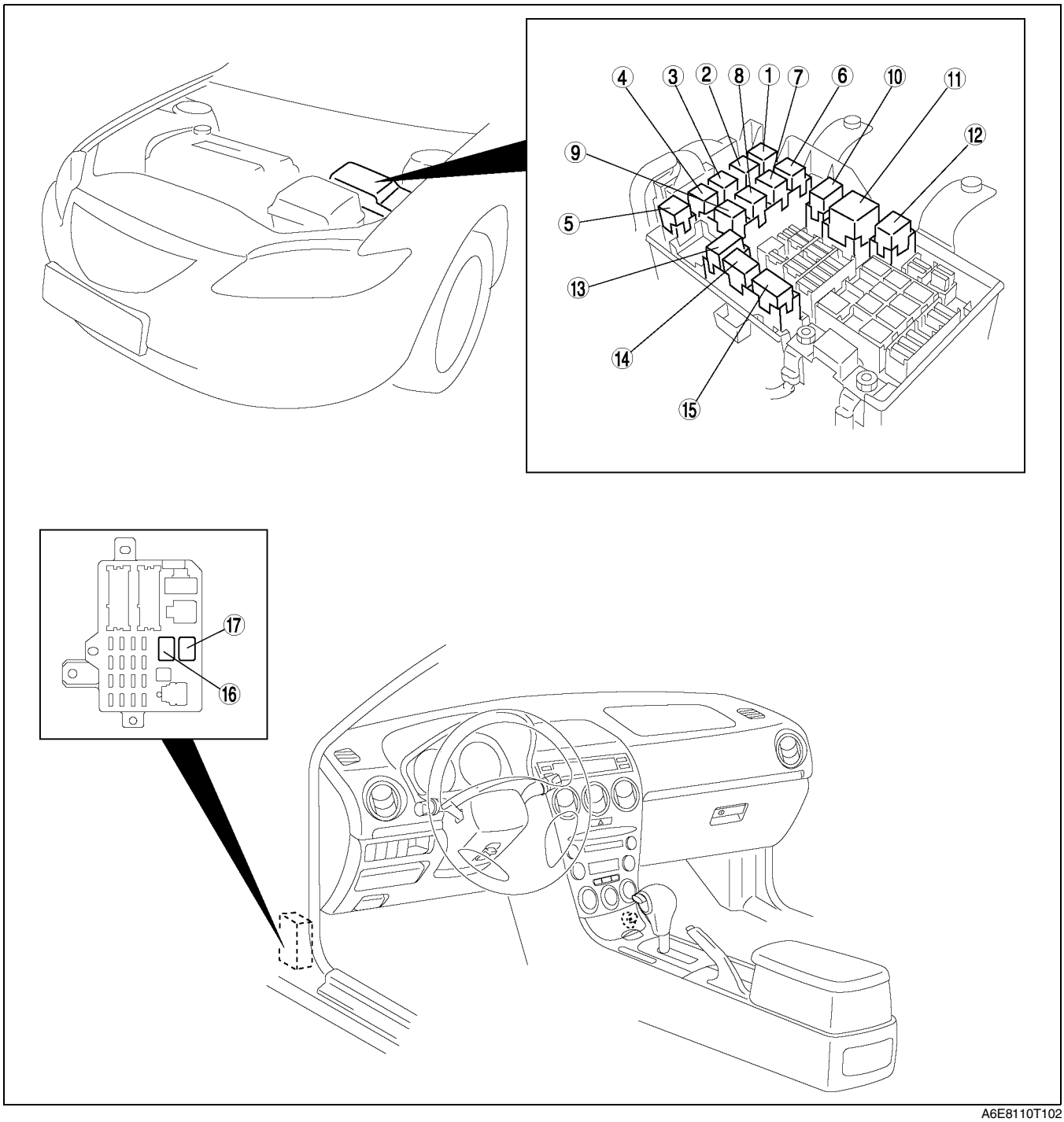

A6E8110T102

1	Cooling fan relay No.2
2	Horn relay
3	Cooling fan relay No.3
4	Stater relay
5	Cooling fan relay No.4
6	Woofer relay
7	Rear window defroster relay
8	Rear fog light relay
9	A/C relay

10	Main relay
11	Headlight relay
12	TNS relay
13	Cooling fan relay No.1
14	Headlight cleaner relay
15	Front fog light relay
16	Fuel pump relay
17	Blower relay

MULITIPLE COMMUNICATION SYSTEM

OUTLINE

A6E811155430T01

- Due to the simplification of the wiring harness, a controller area network (CAN) system for transmission of multiplex input/output signals among electrical modules has been adopted.
- Twisted-pair wiring is used for connections between the following modules (Each electrical module hereafter referred to as a CAN system-related module):
  — PCM to ABS (ABS/TCS) HU/CM (with ABS (ABS/TCS) or DSC HU/CM (with DSC) to instrument cluster.
  — Instrument cluster to audio unit.
- With an on-board diagnostic function included for each multiplex module, display of DTCs using the SST (WDS or equivalent) has improved serviceability.

STRUCTRURAL VIEW

A6E811155430T02

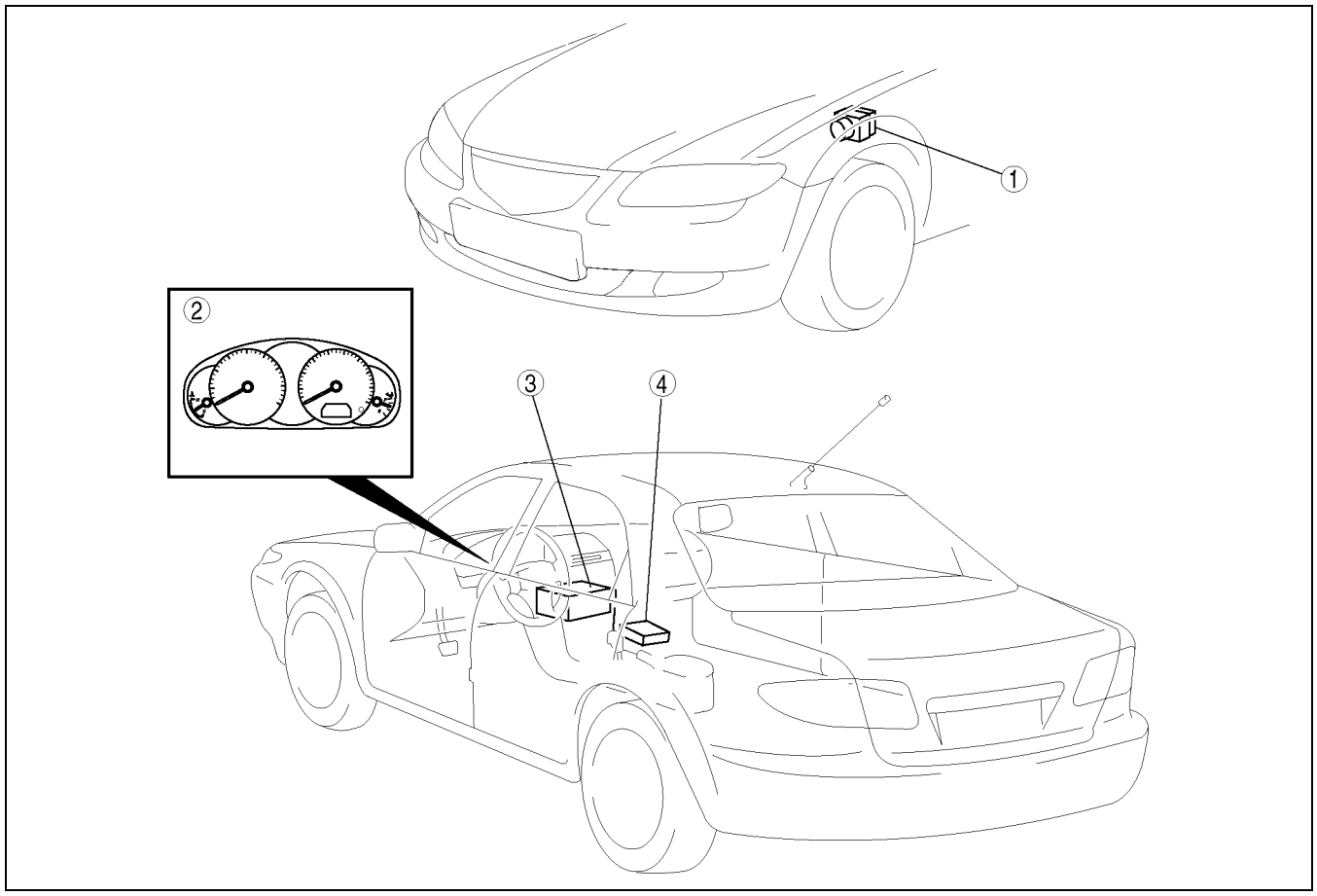

A6E8111T001

1	ABS (ABS/TCS) HU/CM (with ABS (ABS/TCS))
	DSC HU/CM (with DSC)
2	Instrument cluster

3	Audio unit
4	PCM

T

SYSTEM WIRING DIAGRAM

A6E811155430T03

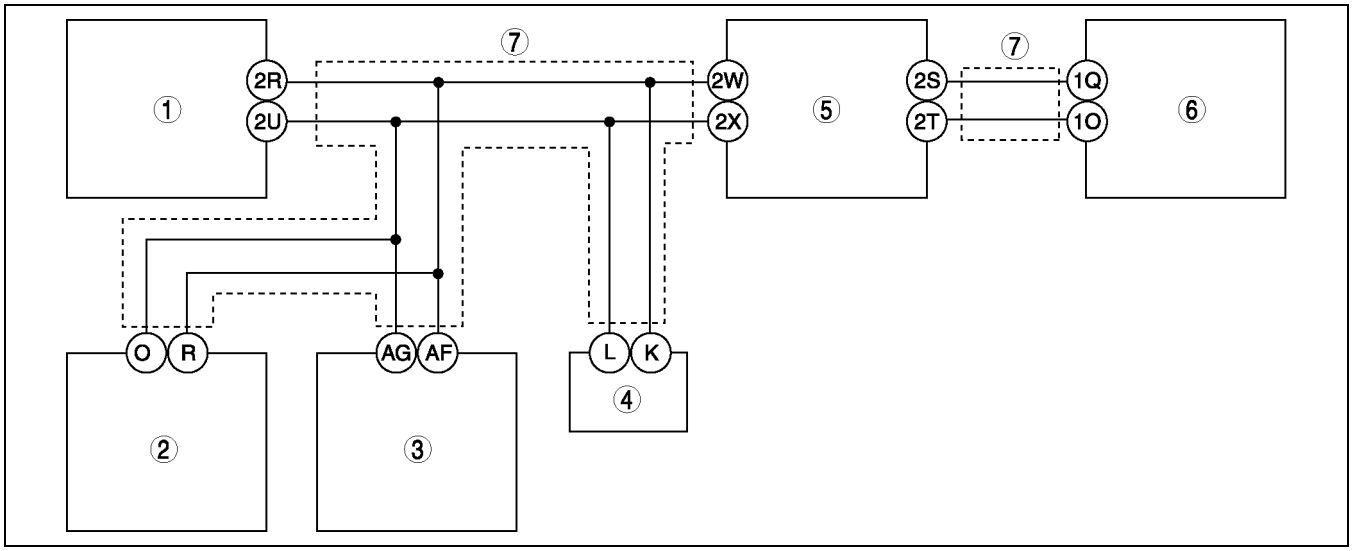

A6E8111T002

1	PCM
2	ABS (ABS/TCS) HU/CM (with ABS (ABS/TCS))
3	DSC HU/CM (with DSC)
4	Data link connector

5	Instrument cluster
6	Audio unit
7	Twist pair

MECHANISM OF CAN SYSTE-RELATED MODULE

A6E811155430T04

- A CAN system-related module is composed of an electrical circuit, CPU, and input/output interface.
- The size of the module has been reduced due to the elimination of the bulky, superfluous, input/output interface in the conventional type of electrical module.
- The CPU (multiplex block) controls all signals exchanged on the CAN harness.
- Communication with non-multiplex parts is carried out by conventional input/output interface.
- The functions of each component are shown below.

Component		Function
Electrical circuit		Supplies power to CPU and vicinity, and to input/output interface.
CPU	Computation processing block	Control function has been expanded, and when transmission is necessary, transmitted data is stored in a multiplex block. If a multiplex block receives a request to read stored data, transmitted data is read from the multiplex block.
	Multiplex block	Transmits to computation processing block data received from bus line. In addition, sends to bus line transmitted data stored from computation processing block.
Input/Output interface		Electrically converts information signals from switches practically input to CPU, and signals output from CPU for operating actuator or indicator lights.

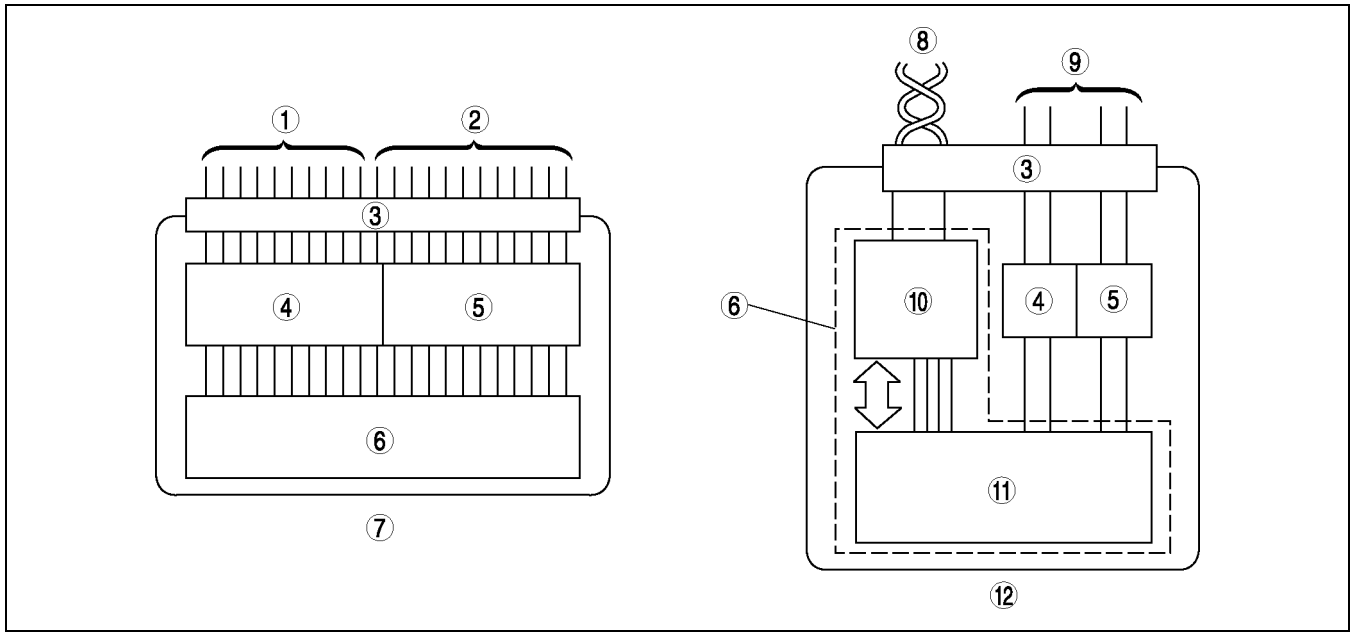

A6E8111T003

1	Input signal
2	Output signal
3	Connector
4	Input interface
5	Output interface
6	CPU

7	Conventional module
8	CAN harness
9	Conventional wiring harness
10	Multiplex block
11	Computation processing block
12	CAN system-related module

T

TWIST PAIR

A6E811155430T05

- The multichannel use two spirally twisted wires called the twist pair, and each wire, bus line A and bus line B, has its own special function.
- Both bus lines are opposite phase voltage. This allows for hardly any noise being emitted and makes if difficult for noise interference to be received.

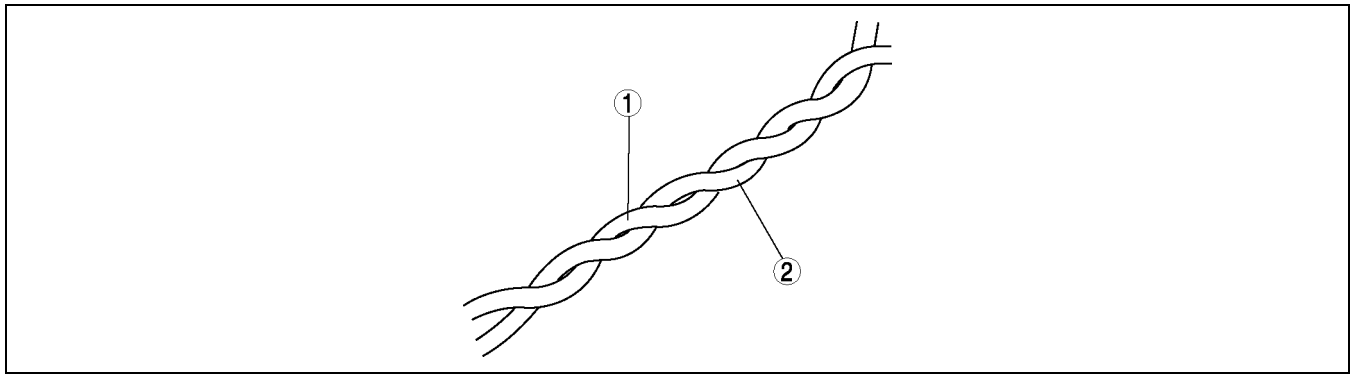

A6E8111T004

1	Bus line A

2	Bus line B

CAN SYSTEM OUTLINE

A6E811155430T06

Time Division Multiplex

- For information exchange between the electrical modules in the conventional system, a wire connection was necessary for each information signal. However, by sending the different signal at varying times over one channel, it is possible to send a large amount of information via a small harness.
- In the conventional, non-multiplex system, in order to control the illumination of the five bulbs, one switch and one channel was necessary for each bulb. For bulbs B and C to illuminate, switches B and C must be ON and electricity must flow through the channel. With the time multiplex system, this can be done through one channel. The channel is comprised of five data signal transmitters which transmit either “0” or “1” signal to indicate for a bulb to turn ON or OFF. For example, to illuminate bulbs B and C, transmitters B and C transmit a “1” and transmitters A, D, and E transmit a “0”. When the receiver receives these signal, bulbs B and C illuminate.

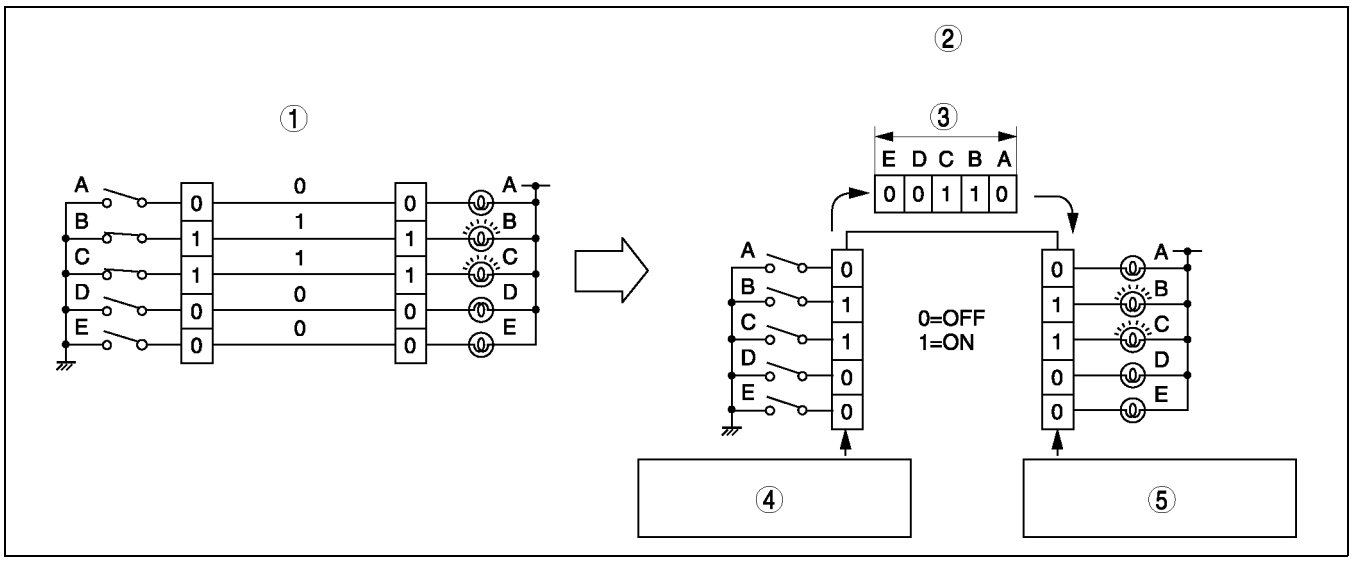

A6E8111T005

1	Non-multiplex system
2	Time division multiplex system
3	Data

4	Each signal is transmitted one by one through the channel as it is received.
5	Each signal is output one by one it is received from the channel.

VEHICLE CAN SYSTEM

A6E811155430T07

- By rearranging the multiple signal, common information between the CAN system-related modules is transmitted and received through the multichannel.
- The signal transmitted by one CAN system-related module is sent through the multichannel to all the CAN system-related modules, but only the concerned module(s) receives the signal and performs the appropriate operation (ex. light illumination, fan operation).

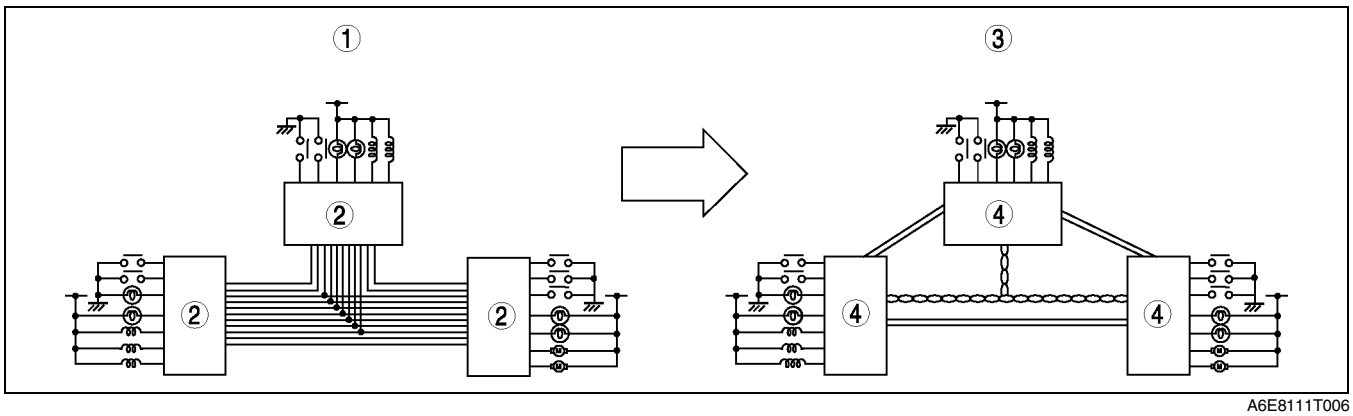

A6E8111T006

1	Conventional system
2	Electrical module

3	CAN system
4	CAN system-related module

CAN SIGNAL-CHART

A6E811155430T08

OUT: Output (sends signal)
IN: Input (receives signal)

Signal		Multiplex module			
		PCM	ABS (ABS/TCS) HU/CM or DSC HU/CM	Instrument cluster	Audio unit (information display)
Engine condition		OUT	IN		
Torque reduction inhibit		OUT	IN		
Engine speed		OUT	IN	IN	
Wheel speed (front left/front right/rear left/rear right)	With ABS (ABS/TCS) or DSC	IN	OUT		
		OUT		IN	
	Without ABS	OUT		IN	
TP		OUT	IN		
ECT		OUT		IN	
Travelled distance	—	IN	OUT		
	MTX, without ABS	OUT		IN	
Fuel injection amount		OUT	IN		
MIL condition		OUT		IN	
Generator warning light conditions		OUT		IN	
Engine displacement		OUT	IN		
Number of cylinders		OUT	IN		
Air induction type		OUT	IN		
Fuel type and delivery		OUT	IN		
Country		OUT	IN		
Transmission/axle type		OUT	IN		
Tire circumference (front/rear)		OUT	IN		
Desired gear/Change lever position		OUT	IN	IN	
HOLD switch conditions		OUT		IN	
Torque reduction request		IN	OUT		
Brake system configuration (EBD/ABS/TCS/DSC)		IN	OUT	IN	
Brake system status	ABS	IN	OUT		
	EBD/ABS/TCS/DSC		OUT	IN	
Brake system warning light conditions (brake fluid level sensor)			IN	OUT	
ABS configuration		IN	IN	OUT	
Drive information system switch operation				IN	OUT
Drive information system display				OUT	IN

T

ON-BOARD DIAGNOSTIC FUNCTION

A6E811155430T09

Outline

- The on-board diagnostic function is incorporated into the PCM, ABS (ABS/TCS) HU/CM (with ABS (ABS/TCS)), DSC HU/CM (with DSC), and instrument cluster. This function can narrow down CAN system malfunction locations.
- The on-board diagnostic function consists of the following functions: a failure detection function, which detects malfunctions in CAN system-related parts; a memory function, which stores detected DTCs; a self-malfunction diagnostic function, which indicates system malfunctions using DTCs and warning lights; and a PID/data monitoring function, which verifies the input/output condition of specific input/output signals being read out.
- Using an SST (WDS or equivalent), DTCs can be read out and deleted, and the PID/data monitoring function can be activated.
- The CAN system has a fail-safe function. When a malfunction occurs in CAN system, the transmission module sends a warning signal and the receiving module illuminates the warning light.

Block Diagram

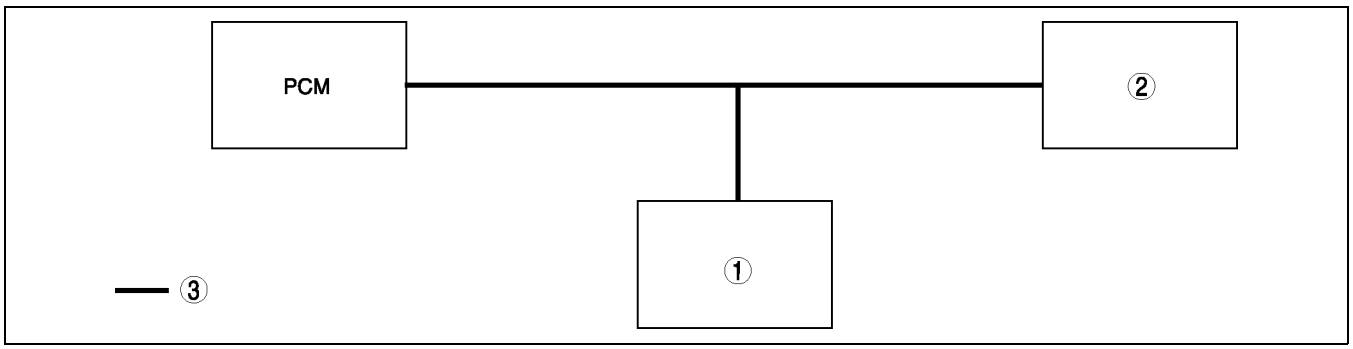

A6E8111T007

1	ABS (ABS/TCS) HU/CM or DSC HU/CM
2	Instrument cluster

3	Twist pair

Failure detection function

- The failure detection function in each CAN system-related module detects malfunctions in input/output signals.
- This function outputs the DTC for the detected malfunction to the DLC-2, and also sends the detected result to the memory function and fail-safe function.

Fail-Safe Function

- When the failure detection function determines that there is a malfunction, the fail-safe function illuminates a warning light to advise the driver of the malfunction.

Module	Fail-safe functionì®Ì§ä
PCM	• MIL illuminated
• ABS (ABS/TCS) HU/CM (with ABS (ABS/TCS)) • DSC HU/CM (with DSC)	• ABS (ABS/TCS) suspended (with ABS (ABS/TCS)) • DSC suspended (with DSC) • ABS warning light illuminated • DSC/TCS indicator light illuminated • DSC OFF light illuminated • TCS OFF light illuminated
Instrument cluster	• Speedometer, tachometer, water temperature gauge: 0 displayed • MIL illuminated • ABS warning light illuminated

Memory Function

- The memory function stores the DTC for the malfunction of input/output signals for related parts, as determined by the failure detection function.

Self-Malfunction Diagnostic Function

- The self-malfunction diagnostic function determines that there is a malfunction, and outputs a signal, as a DTC, to the DLC-2. The DTC can be read out using an SST (WDS or equivalent).

DTC table

DTC	Malfunction location	Related module
U0073	CAN system communication error	PCM
U0121	Communication error to ABS (ABS/TCS) HU/CM or DSC HU/CM	
U0155	Communication error to instrument cluster	
U1900	CAN system communication error	• ABS (ABS/TCS) HU/CM (vehicles with ABS (ABS/TCS)) • DSC HU/CM (vehicles with DSC) • Instrument cluster
U2516	CAN system wiring harness open and short circuit	

PID/Data Monitoring Function

- The PID/data monitoring function is used to freely select and read out, in real time, the monitored items for the input/output signals of the ABS (ABS/TCS) HU/CM, DSC HU/CM and instrument cluster.
- An SST (WDS or equivalent) is used to read out the PID/data monitor information.

PID name (definition)	Condition	Specification	Related module	Terminal
IC_MSG (Missing message from the instrument cluster)	Present	Circuit in the Instrument cluster is normal	ABS (ABS/TCS) HU/CM or DSC HU/CM	• ABS (ABS/TCS) HU/CM: O, R • DSC HU/CM: AF, AG • Instrument cluster: 2W, 2X
	Not Present	Circuit in the Instrument cluster is abnormal		
ABS_MSG (Missing message from the ABS (ABS/TCS) HU/CM or DSC HU/CM)	Present	Circuit in the ABS (ABS/TCS) HU/CM or DSC HU/CM is normal	Instrument cluster	
	Not Present	Circuit in the ABS (ABS/TCS) HU/CM or DSC HU/CM is abnormal		
PCM_MSG (Missing message from the PCM)	Present	Circuit in the PCM is normal	• ABS (ABS/TCS) HU/CM or DSC HU/CM • Instrument cluster	
	Not Present	Circuit in the PCM is abnormal		

Narrowing Down Malfunction Locations

- The on-board diagnostic function, by verifying the detected DTC and PID/data monitor information from each module, can narrow down a CAN system malfunction location. Refer to the Self-Malfunction Diagnostic Function and PID/Data Monitoring Function for detailed information regarding DTCs and the PID/data monitor. (See T–11 Self-Malfunction Diagnostic Function.) (See T–11 PID/Data Monitoring Function.)

Flowchart

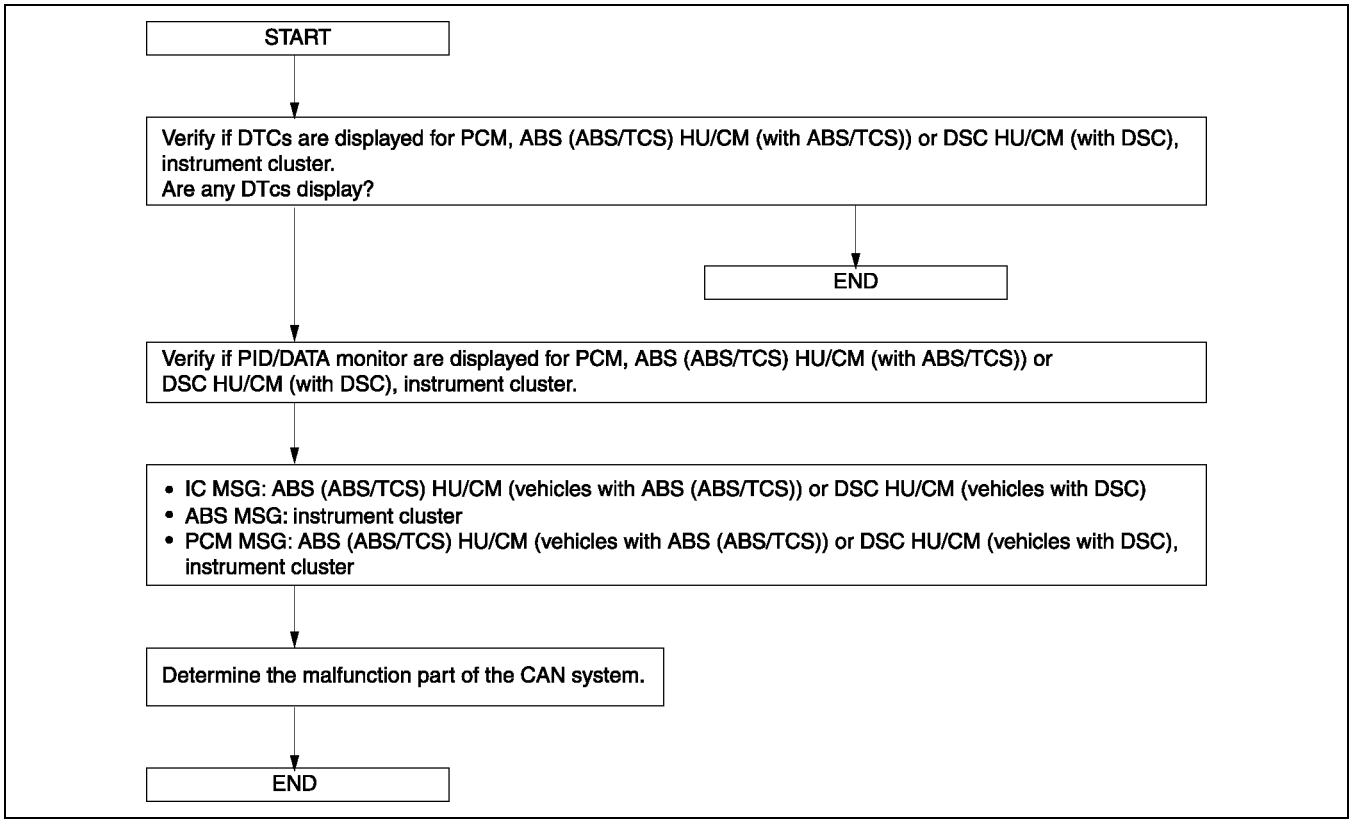

A6E8111TH01

Example (Open circuit in PCM-related wiring harness)

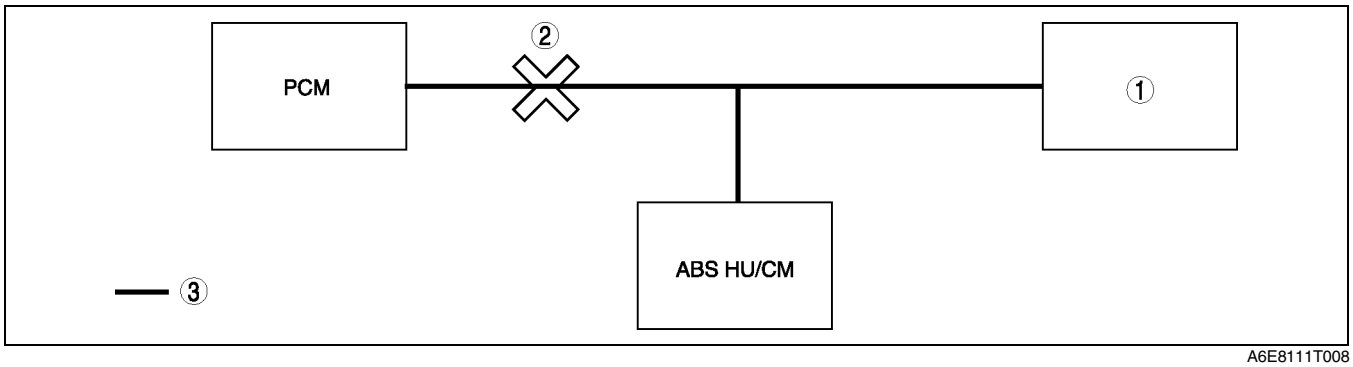

A6E8111T008

1	Instrument cluster
2	Circuit open

3	Twist pair

Note

- This example is for vehicles not equipped with a TCS or DSC.

1. DTCs for the PCM, ABS HU/CM and instrument cluster can be verified using a SST (WDS or equivalent).

Module	Displayed DTC	Probable malfunction location
PCM	U0073	PCM-related CAN system malfunction
	U0121	Communication error between PCM and ABS HU/CM
	U0155	Communication error between PCM and instrument cluster
ABS HU/CM	U1900, U2516	ABS HU/CM-related CAN system malfunction
Instrument cluster	U1900, U2516	Instrument cluster-related CAN system malfunction

2. PID/data monitor information for the PCM, ABS HU/CM can be verified using an SST (WDS or equivalent).

Module	PID name (definition)	Condition	Probable malfunction point
ABS HU/CM	PCM MSG (Missing message from the PCM)	Not Present	Communication error between ABS HU/CM and PCM
	IC MSG (Missing message from the instrument cluster)	Present	Normal communication between ABS HU/CM and instrument cluster
Instrument cluster	PCM MSG (Missing message from the PCM)	Not Present	Communication error between instrument cluster and PCM
	ABS MSG (Missing message from the ABS (ABS/TCS) HU/CM or DSC HU/CM)	Present	Normal communication between instrument cluster and ABS HU/CM

3. If there is a communication error between the ABS HU/CM and PCM, or between the instrument cluster and PCM, even if the communication between the ABS HU/CM and the instrument cluster is normal, it is probable that there is a malfunction in the PCM or PCM-related wiring harnesses.

EXTERIOR LIGHTING SYSTEM

OUTLINE

A6E811201052T01

- Headlight with built-in front fog light,front turn and parking light has been adopted.
- A projector type has been adopted to the headlight (low-beam) and front fog light. The operation of projector-type headlight and front fog light is the same as that of the current XEDOS 9/MILLENIA (TA) models.
- Discharge headlight, that illuminate a wide area, have been adopted for the headlights (low beam). (For vehicles equipped with discharge headlights.)
- A headlight auto leveling system, which responds to the vehicle attitude and automatically adjusts the optical axis of the headlights, has been adopted. (For vehicles equipped with discharge headlights.)
- Stepped reflectors have been adopted to the rear combination lights and inboard combination lights.

STRUCTURAL VIEW

A6E811201052T02

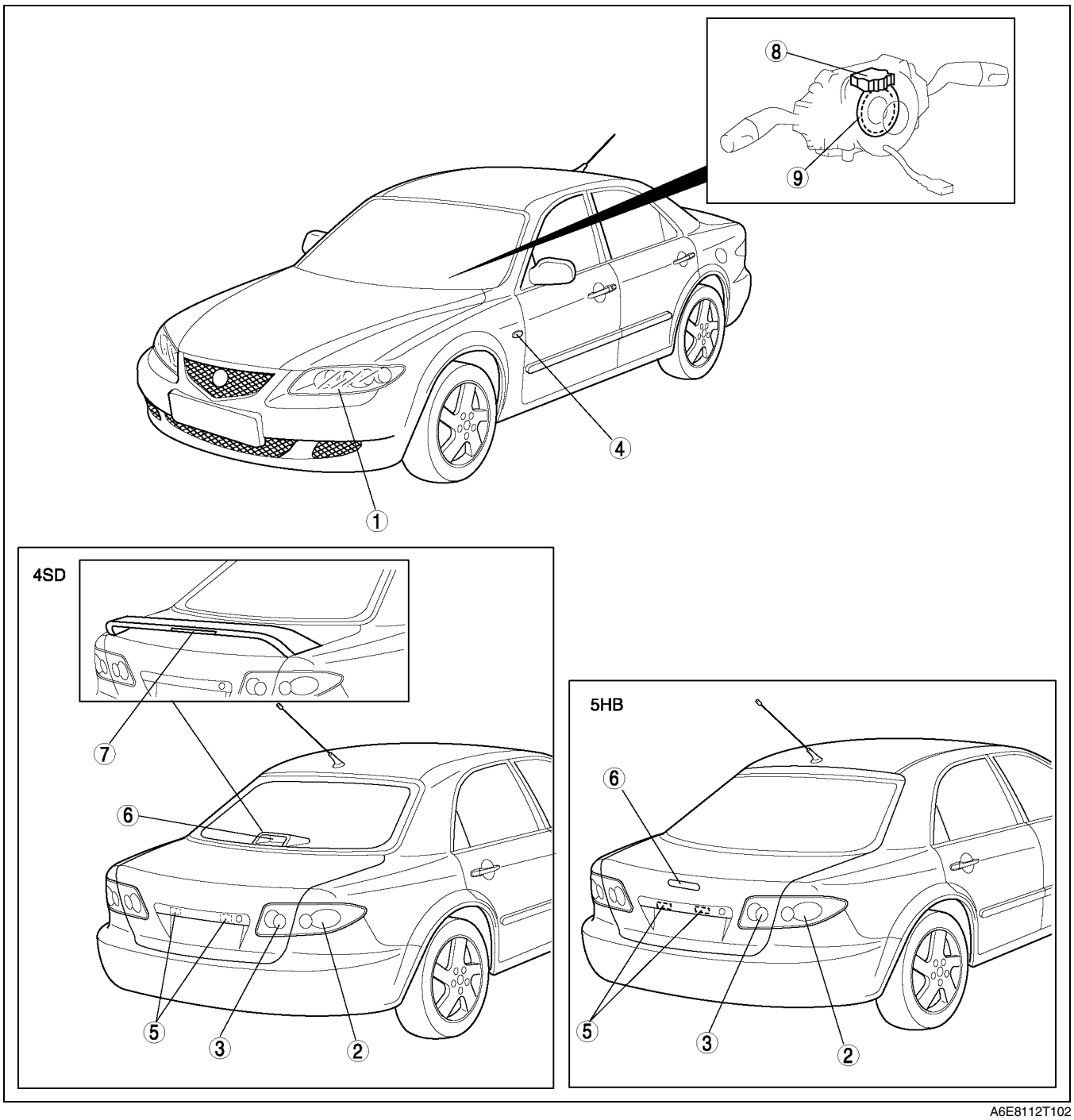

A6E8112T102

1	Front combination light
2	Rear combination light
3	Inboard combination light
4	Front side turn light
5	License plate light

6	High-mount brake light
7	High-mount brake light (rear spoiler type)
8	Steering angle sensor (with DSC)
9	Disc (with DSC)

FRONT COMBINATION LIGHT

A6E811201052T03

Outline

- Projector type headlights (low-beam) and front fog lights have been adopted, and these have been incorporated, along with the front turn light and the parking light, into a single unit to improve size reduction.
- Discharge headlights, with a wide illumination area and projection of white light with a hue approaching that of the sunlight, have been adopted. (For vehicles equipped with discharge headlights.)

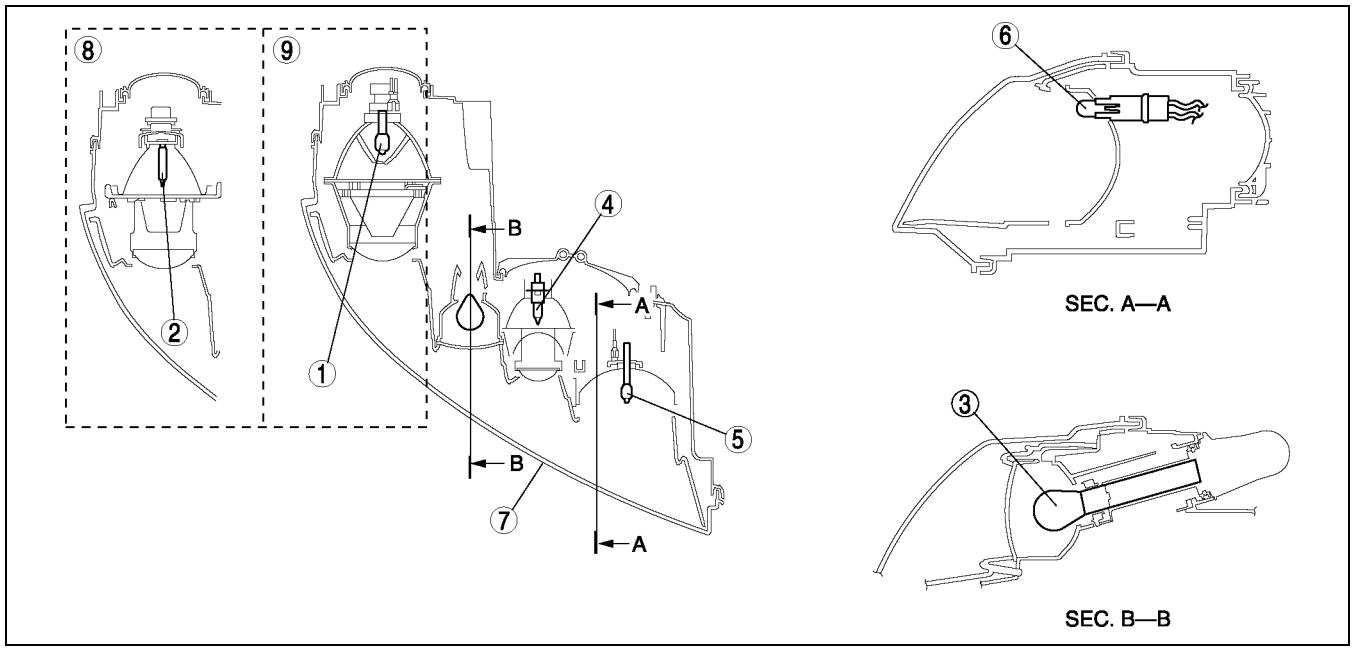

A6E8112T113

1	Headlight bulb (low-beam)
2	Discharge headlight bulb (low-beam)
3	Front turn light bulb
4	Front fog light bulb
5	Headlight bulb (high-beam)

6	Parking light bulb
7	Front combination light
8	Discharge type
9	Halogen type

T

DISCHARGE HEADLIGHT

A6E811201052T04

Outline

- Compared with the current headlights, the illumination area is wider. Moreover, due to projection of white light with a hue approaching that of the sunlight, night visibility white driving has been improved.
- Use of the gas discharge bulb realizes high efficiency and low power consumption luminosity.

Structural View

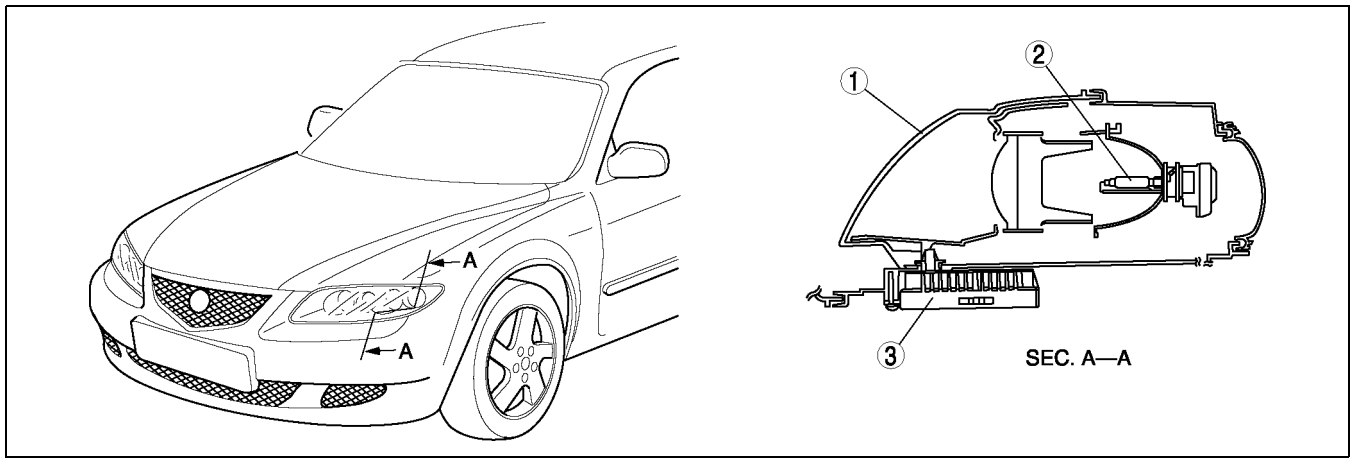

A6E8112T106

1	Front combination light
2	Discharge headlight bulb

3	Discharge headlight control unit

Structre And Operation

1. The high voltage pulse (alternating current approx. 25,000 V) traveling from the discharge headlight control unit is applied between both discharge headlight bulb terminals, energizing the xenon gas in the bulb.
2. Based on the energizing of the xenon gas, the temperature of the discharge headlight bulb interior increases, vaporizing the mercury and discharging the arc.
3. By the mercury and discharging the arc, the temperature of the discharge headlight bulb interior increases further, metallic iodide is vaporized and separated, and metallic atoms are discharged, producing light.

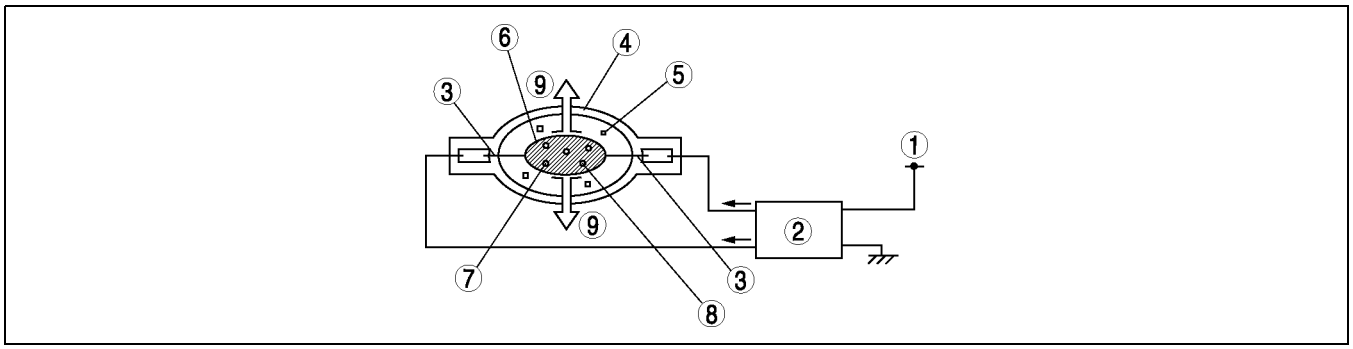

A6E8112T111

1	B+
2	Discharge headlight control unit
3	Terminal
4	Discharge headlight bulb
5	Xenon gas

6	Metallic atoms
7	Metallic iodide
8	Mercury
9	Light

DISCHARGE HEADLIGHT CONTROL UNIT

A6E811201052T05

Function

- Controls the amount of electrical current while the discharge headlight are on to maintain optimum brightness together with lighting stability.
- The failure detection functions are as follows:
  — Abnormal input detection function
  — Abnormal output detection function

Structure And Operation

- Built into the headlight and installed on the headlight lower side.
- Switches the direct current from the battery to alternating current and optimally controls the current supply output to the bulb.

1	Discharge headlight control unit

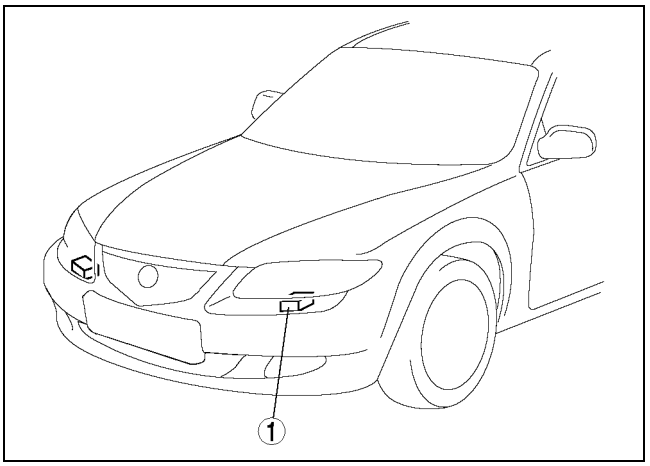

A6E8112T121

Failure Detection Function

Abnormal input detection function

- If the discharge headlight control unit input voltage (9—16 V) fails to maintain operational voltage (except for the drop in voltage immediately after the headlights are turned on), the discharge headlight control unit turns off the headlights for protection or to prevent part operation errors.
- The discharge headlight control unit turns the headlights back on at resumption of normal operational voltage.

Abnormal output detection function

- If there is an abnormality in the output system (detects an open or GND short circuit in harness), the discharge headlight control unit turns off the headlights for protection or to prevent part operation errors.
- If the discharge headlight control unit turns off the headlights due to an abnormality in the output system, the discharge headlight control unit will maintain them in the off condition until the light switch is turned again from off to on.

HEADLIGHT AUTO LEVELING SYSTEM

A6E811201052T06

Outline

- The optical axis of the headlights adjusts automatically at fixed angles to improve visibility and prevent the blinding of oncoming traffic when the vehicle changes speed or is under varying cargo and passenger weight conditions, among other variables.

Structural View

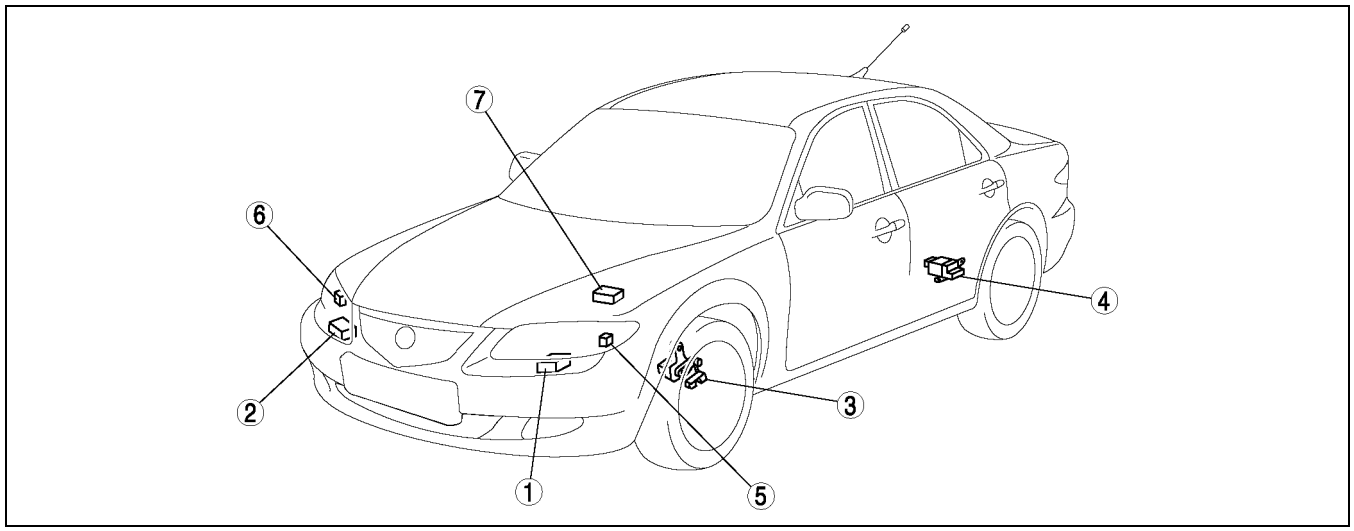

A6E8112T114

1	Auto leveling control unit (main)
2	Auto leveling control unit (sub)
3	Front auto leveling sensor
4	Rear auto leveling sensor

5	Headlight leveling actuator (LH)
6	Headlight leveling actuator (RH)
7	ABS/TCS HU/CM or DSC HU/CM

System Diagram

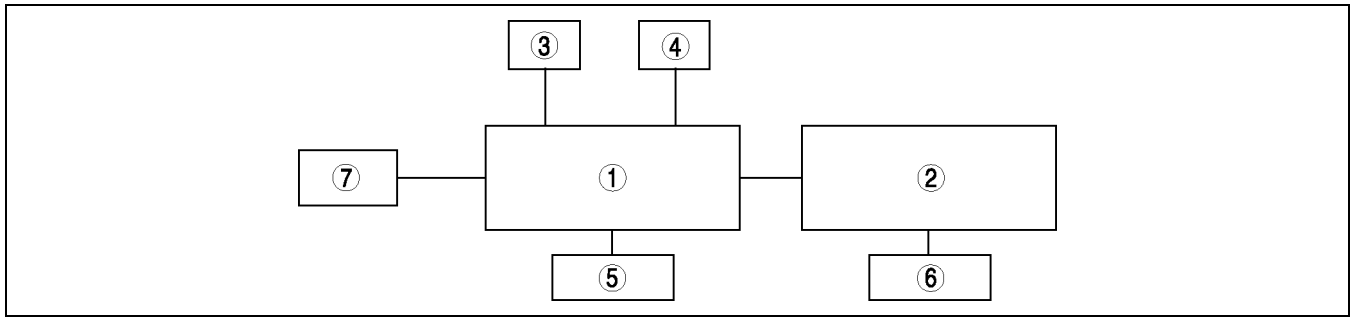

A6E8112T115

1	Auto leveling control unit (main)
2	Auto leveling control unit (sub)
3	Front auto leveling sensor
4	Rear auto leveling sensor

5	Headlight leveling actuator (LH)
6	Headlight leveling actuator (RH)
7	ABS/TCS HU/CM or DSC HU/CM

Varying Passenger And Cargo Conditions Operation

1. According to the fluctuation of the suspension, the auto leveling sensors installed in the front and rear of the vehicle send a signal to auto leveling control unit (main).
2. When a difference between two of the signal inputted from the auto leveling sensors is detected, the auto leveling control unit (main) verifies the vehicle attitude, then calculates the amount of optical axis adjustment and sends signal to the auto leveling control unit (sub).
3. The auto leveling control unit compares the actual and the required position of the reflector, then inputs a command signal to the headlight leveling actuator.

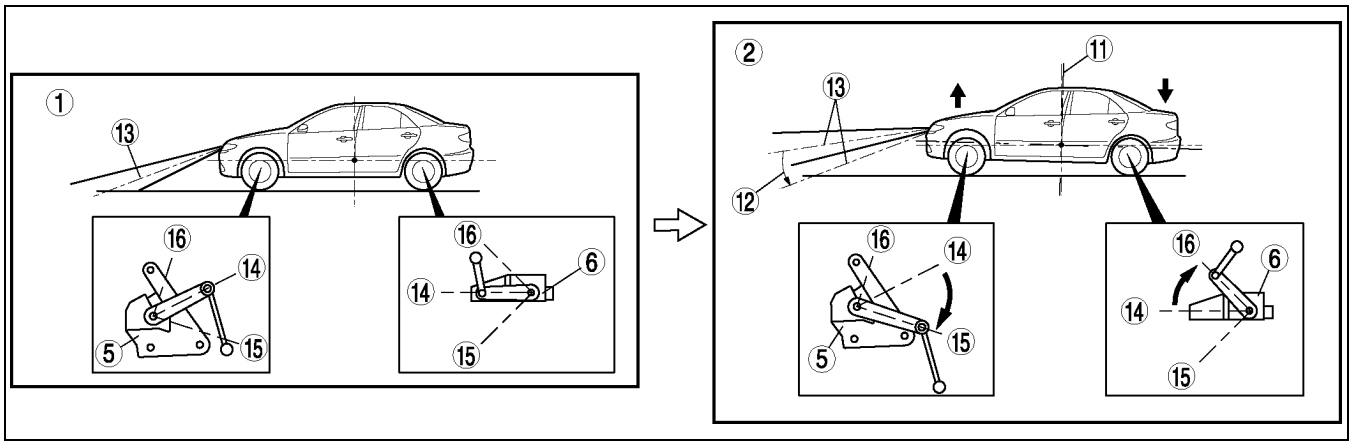

A6E8112T116

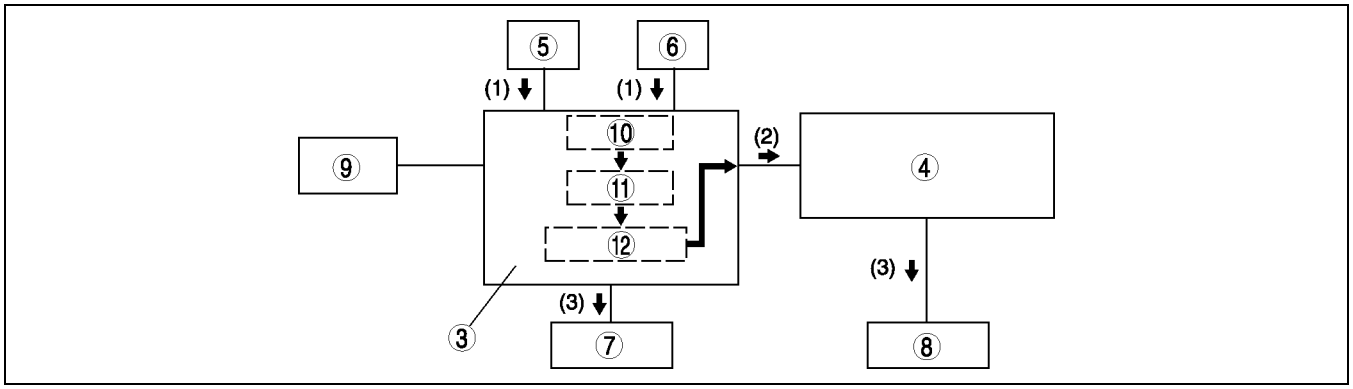

A6E8112T117

1	Zero setting
2	Large passenger or cargo weight
3	Auto leveling control unit (main)
4	Auto leveling control unit (sub)
5	Front auto leveling sensor
6	Rear auto leveling sensor
7	Headlight leveling actuator (LH)
8	Headlight leveling actuator (RH)

9	ABS/TCS HU/CM or DSC HU/CM
10	Difference between two voltage signals
11	Vehicle attitude
12	Optical axis adjustment amount
13	Optical axis
14	Zero reference
15	High
16	Low

Operation when driving

1. While driving with the headlights on, the auto leveling control unit (main) receives an inputted vehicle speed signal from the ABS/TCS HU/CM or DSC HU/CM unit (referred to as ABS (DSC) HU/CM in this section) and a signal based on suspension fluctuation from the front and rear auto leveling sensors.
2. Based on the inputted vehicle speed signal, the auto leveling control unit calculates acceleration angle and verifies the change in vehicle speed. Also, if there is a difference between two signal inputted from the front and rear auto leveling sensors, the auto leveling control unit (main) unit verifies the actual attitude of the vehicle. The auto leveling control unit (main) calculates the optical axis adjustment amount based on the condition of these two signal, and sends signal to the auto leveling control unit (sub).
3. The auto leveling control unit compares the actual and the required position of the reflector, then inputs command signal to the leveling actuator.

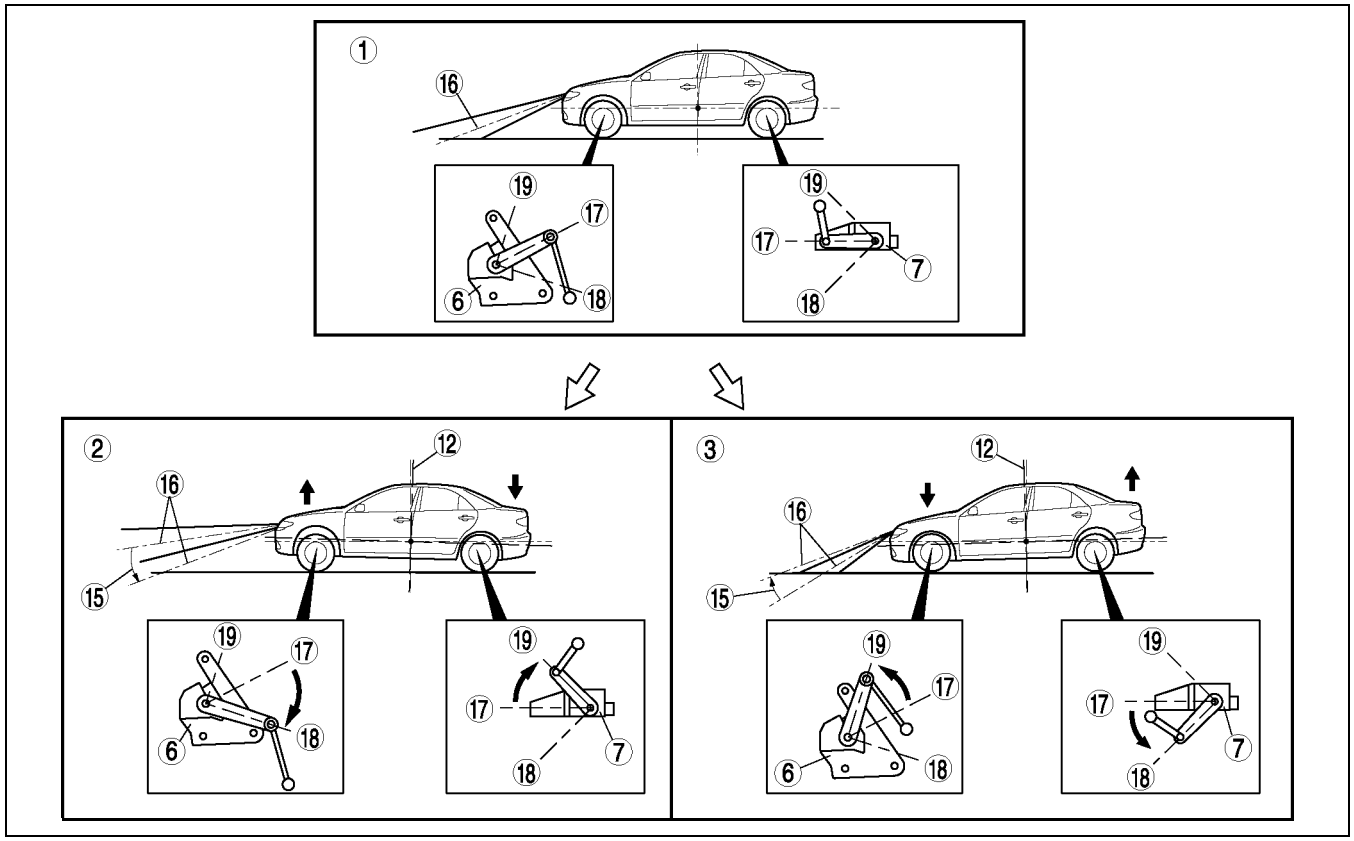

A6E8112T118

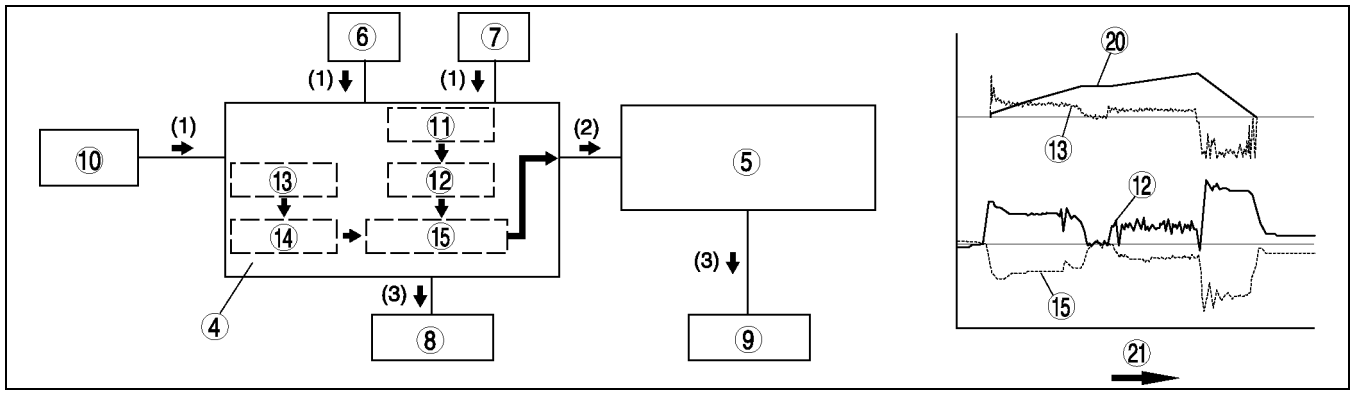

A6E8112T119

1	Zero setting
2	Acceleration
3	Deceleration
4	Auto leveling control unit (main)
5	Auto leveling control unit (sub)
6	Front auto leveling sensor
7	Rear auto leveling sensor
8	Headlight leveling actuator (LH)
9	Headlight leveling actuator (RH)
10	ABS/TCS HU/CM or DSC HU/CM
11	Difference between two voltage signals

12	Vehicle attitude
13	Acceleration degree calculation
14	Change in vehicle speed
15	Optical axis adjustment amount
16	Optical axis
17	Zero reference
18	High
19	Low
20	Vehicle speed
21	Time

Note

- When the ignition switch is turned to ON, it is normal to hear the headlight leveling acutuator operating for a few second, as it verifies system operating condition.
- When driving on a consistently rough or uneven road, the auto leveling function would cause a flickering effect for oncoming traffic. Therefore, to prevent the blinding of oncoming traffic, the auto leveling function is slowed down.

AUTO LEVELING CONTROL UNIT

A6E811201052T07

Function

- In order to prevent the blinding of oncoming traffic and improve visibility, the auto leveling control units automatically control the optical axis direction for optimal illumination based on signal inputted from the ABS (DSC) HU/CM and the auto leveling sensor.
- With an on-diagnostic function included for auto leveling control unit, servicing based on display of DTCs using the SST (WDS or equivalent) has been improved.

Structural View

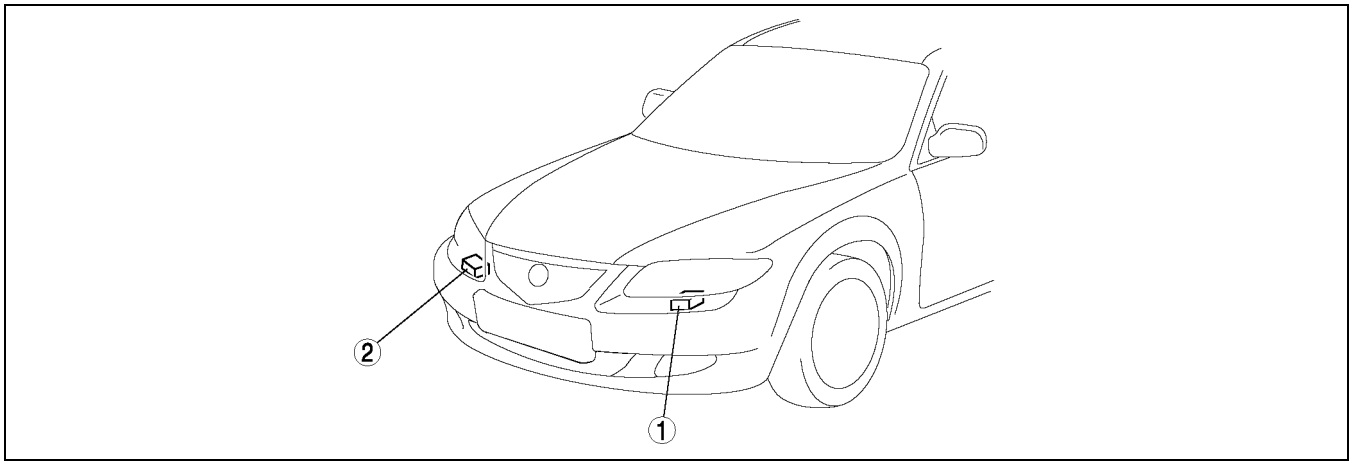

A6E8112T120

1	Auto leveling control unit (main)	2	Auto leveling control unit (sub)

Strucutre And Operation

- The auto leveling control units (main and sub) are installed within the discharge control units, located under the front combination lights.
- The auto leveling control unit (main) verifies changes in vehicle speed and attitude based on signal inputted from the ABS (DSC) HU/CM, and front and rear auto leveling sensors. The unit then calculates the optimal direction for the optical axis and sends signal to the auto leveling control unit (sub).
- Based on the calculation of the optical axis adjustment amount, the auto leveling control unit controls the headlight leveling actuator.

Caution

- **After performing the following service items, configuration and zeroset must be performed using the WDS or equivalent.**

×:Applied
—:Not applied

	Service Item	Auto Leveling Control Unit Configuration	Headlight Zeroset *1	Headlight Aiming*1
1	Auto leveling control unit (main or sub) replaced with new part.	×	×	×
2	Front combination light removal/installation	—	—	×
3	Front auto leveling sensor or rear auto leveling sensor replaced with new part, or harness or connector replaced with new part.	—	×	×
4	Front auto leveling sensor connector or rear auto leveling sensor connector removal.	—	×	×
5	Front auto leveling sensor or rear auto leveling sensor removal/installation.	—	×	×

*1 : Execute headlight aiming for both headlights and together with headlight zeroset (which is performed by auto leveling control unit (main))

RUNNING LIGHT SYSTEM

A6E811201052T08

Outline

- The running light system operates the low-beam headlight and TNS automatically when the ignition switch turns on. It is controlled by the running light unit.

System Diagram

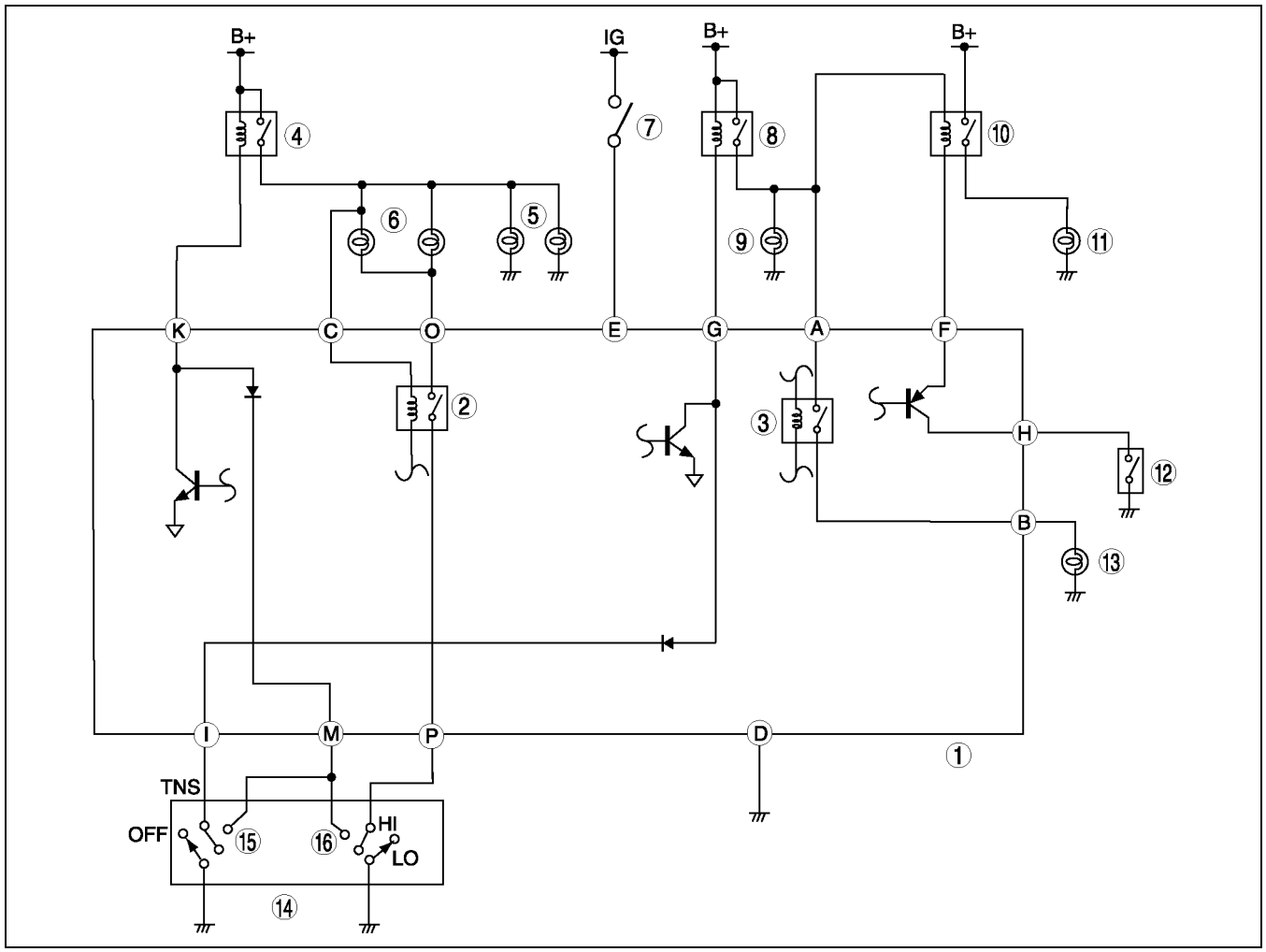

A6E8112T122

1	Running light unit
2	Relay A
3	Relay B
4	Headlight relay
5	Headlight (low-beam)
6	Headlight (high-beam)
7	Ignition switch
8	TNS relay

9	Parking light/taillight/license plate light
10	Front fog light relay
11	Front fog light
12	Front and rear fog light switch
13	Illumination light
14	Headlight switch
15	Headlight
16	Flash-to-pass

Outline Of System Operation

Operation condition (Input signal)	Operation condition of illumination (Output signal)				
	Low beam headlight	High beam headlight	TNS	Illumination light	Front fog light
Ignition switch at ON	ON	OFF	ON	OFF	Does not illuminate
Ignition switch at ON and headlight switch at TNS position	OFF	OFF	ON	ON	Can be illuminated
Ignition switch at ON and flash-to-pass on	ON	ON	ON	OFF	Does not illuminate

System Operation
When the ignition switch turns to on:

1. Two transistors are turned on with current (1) flowing in transistor 1, and current (2) in transistor 2.
2. When transistors 1 and 2 are on, the headlight relay and TNS relay turn on, and the headlights (low-beam), parking lights/taillights/license plate light illuminate.

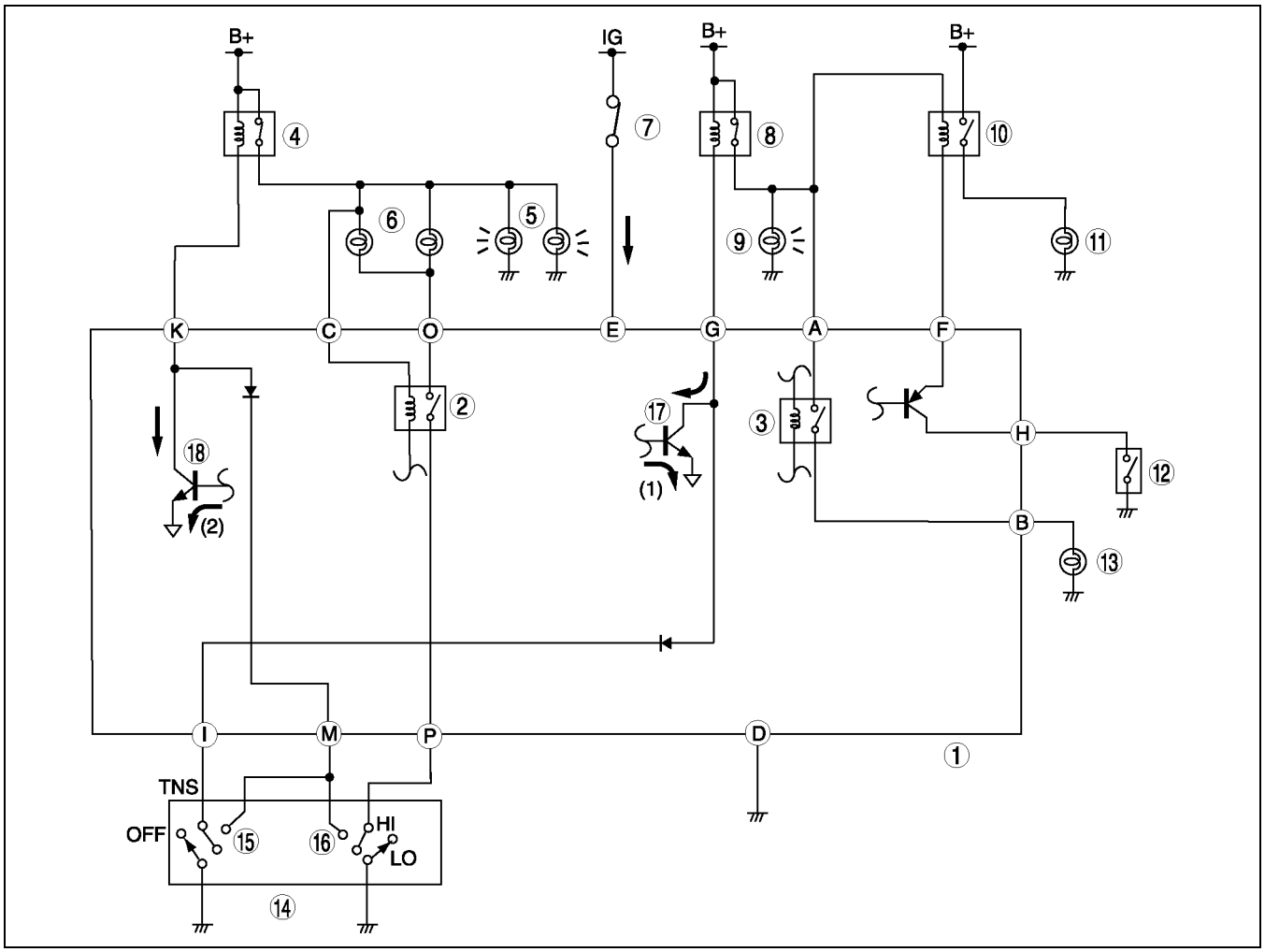

A6E8112T123

1	Running light unit
2	Relay A
3	Relay B
4	Headlight relay
5	Headlight (low-beam)
6	Headlight (high-beam)
7	Ignition switch
8	TNS relay
9	Parking light/taillight/license plate light

10	Front fog light relay
11	Front fog light
12	Front and rear fog light switch
13	Illumination light
14	Headlight switch
15	Headlight
16	Flash-to-pass
17	Transistor 1
18	Transistor 2

When the ignition switch is at ON and the headlight switch is at TNS position:

1. When the headlight switch is turned to the TNS position, battery voltage from the TNS relay flows from the headlight switch to the ground, and the TNS relay is turned on.
2. When the TNS is on, the parking lights/taillights/license plate light illuminate. Also, current (1) flows in relay B, and relay B is turned on.
3. When relay B is on, the illumination light illuminates.

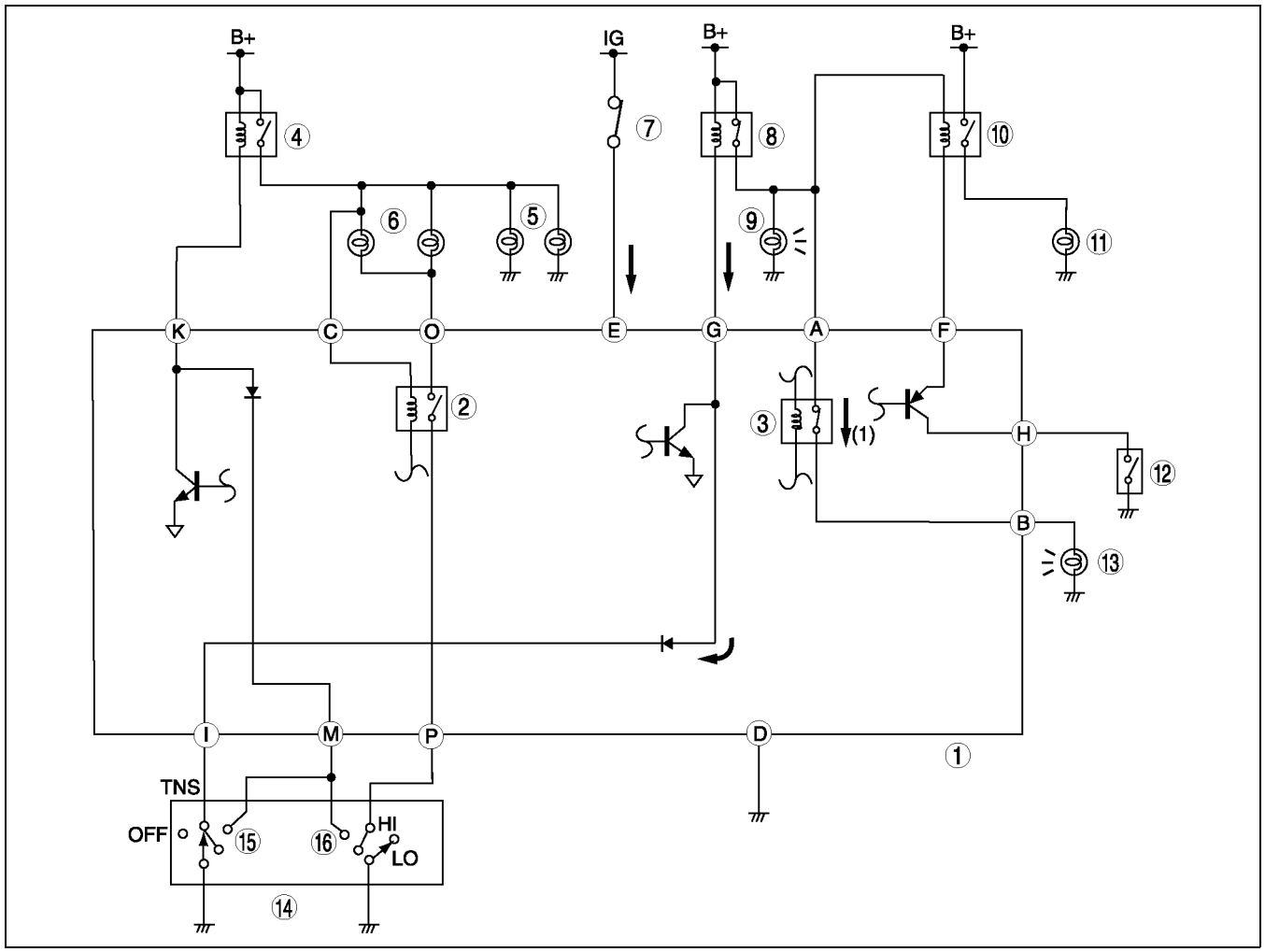

A6E8112T124

1	Running light unit
2	Relay A
3	Relay B
4	Headlight relay
5	Headlight (low-beam)
6	Headlight (high-beam)
7	Ignition switch
8	TNS relay
9	Parking light/taillight/license plate light

10	Front fog light relay
11	Front fog light
12	Front and rear fog light switch
13	Illumination light
14	Headlight switch
15	Headlight
16	Flash-to-pass
17	Transistor 1

T

When the ignition switch is at ON and when the flash-to-pass is on:

1. When the headlight switch is turned to the flash-to-pass position, battery voltage from the headlight relay flows from the headlight switch to the ground, and the headlight relay is turned on.
2. When the headlight relay and TNS relay are on, the headlights (low-beam), parking lights/taillights/license plate light illuminate. Due to the flow of current (1) in relay A are turned on.
3. When relay A turns on, and the headlights (high-beam) illuminate.

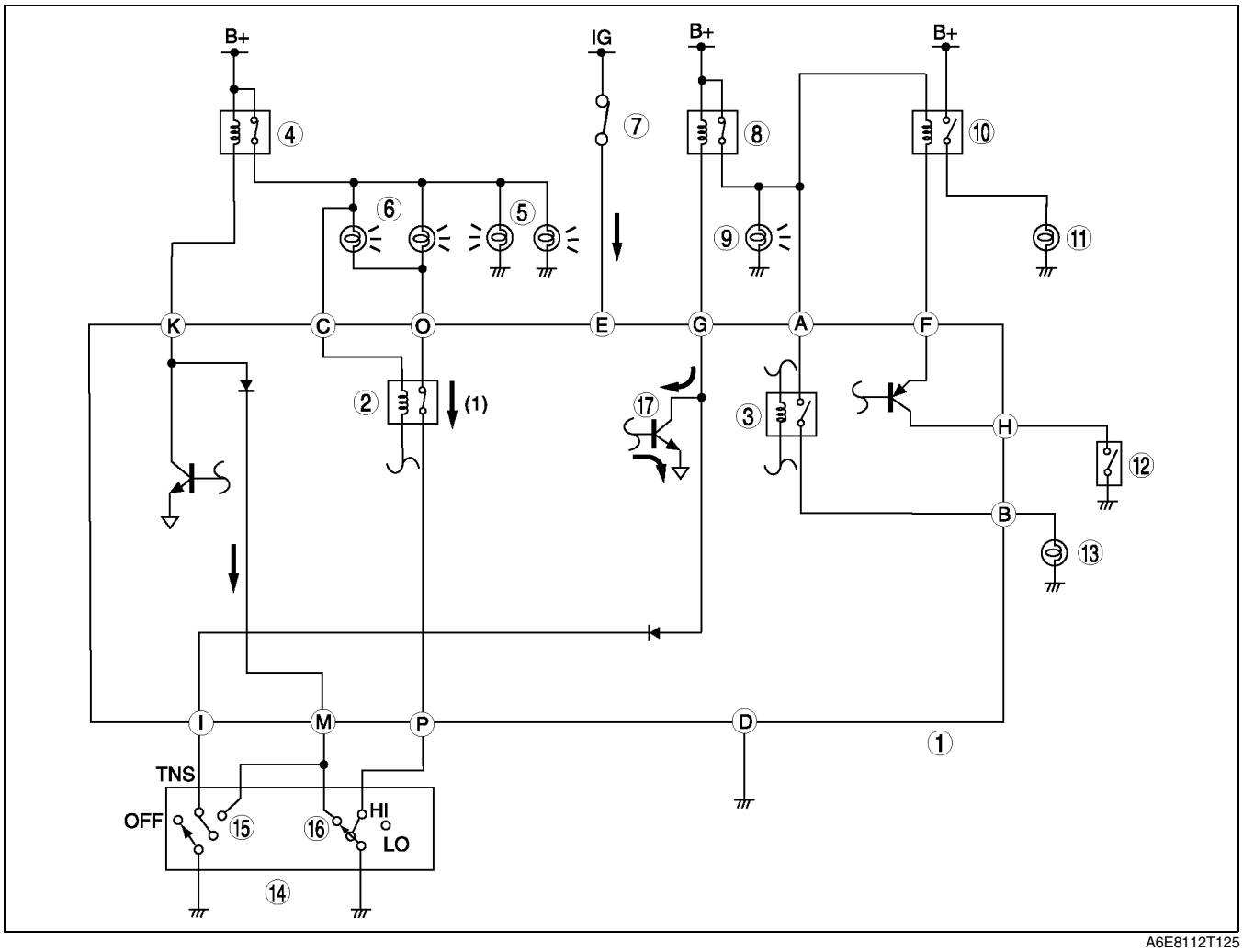

A6E8112T125

1	Running light unit
2	Relay A
3	Relay B
4	Headlight relay
5	Headlight (low-beam)
6	Headlight (high-beam)
7	Ignition switch
8	TNS relay
9	Parking light/taillight/license plate light

10	Front fog light relay
11	Front fog light
12	Front and rear fog light switch
13	Illumination light
14	Headlight switch
15	Headlight
16	Flash-to-pass
17	Transistor 1

REAR COMBINATION LIGHT AND INBOARD COMBINATION LIGHT

A6E811201052T09

Outline

- A step reflector that diffuses and reflects the light of the rear combination and inboard combination light bulbs, has been adopted. A flat, uncut lens has been adopted to control illumination distribution.
- A round reflector for the rear combination and inboard combination lights has been adopted to improve design.

Structural View

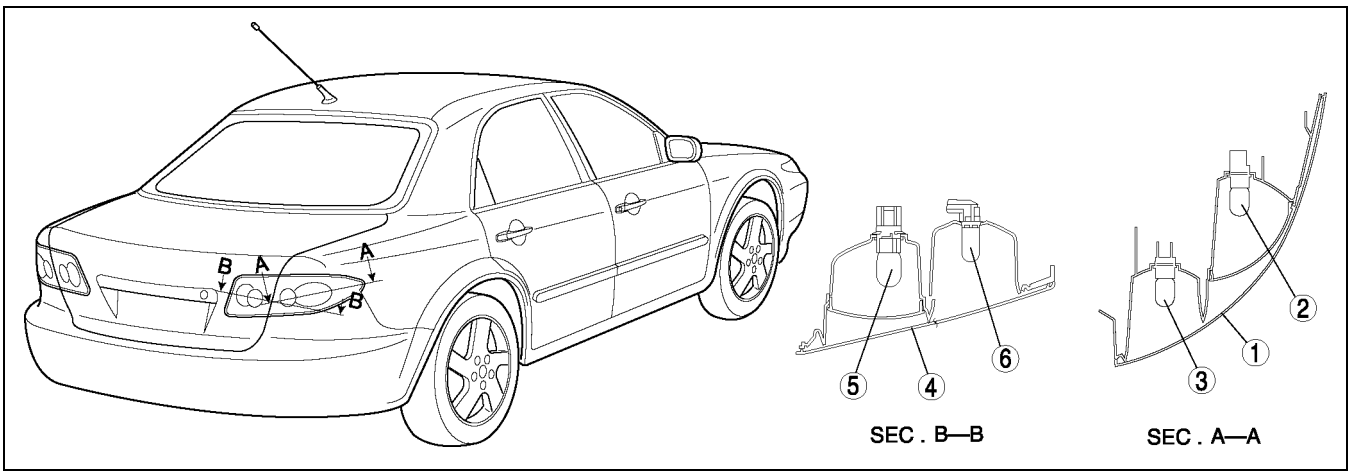

A6E8112T103

1	Rear combination light
2	Brake light/taillight bulb
3	Rear turn light bulb
4	Inboard combination light

5	Back-up light bulb
6	Rear fog light bulb (R.H.D.: right side only, L.H.D.: left side only)

T

INTERIOR LIGHTING SYSTEM

STRUCTURAL VIEW

A6E811401052T01

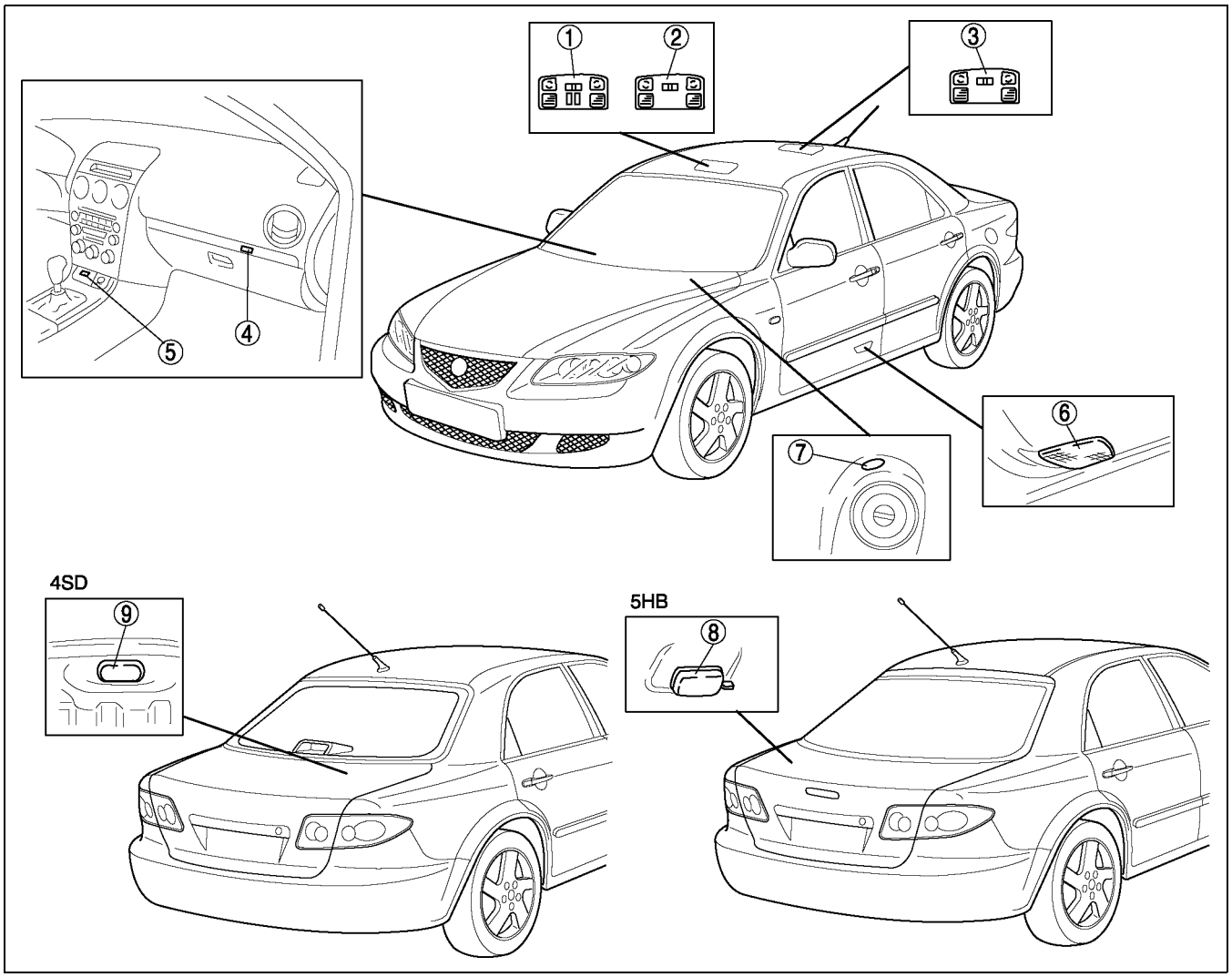

A6E8114T101

1	Front map light (with sliding sunroof)
2	Front map light (without sliding sunroof)
3	Rear map light
4	Glove compartment light
5	Ashtray illmination light

6	Courtesy light
7	Ignition key illumination
8	Cargo compartment light
9	Trunk compartment light

OUTLINE

A6E811401052T02

- The interior lights are shown below.
- The interior light control system turns on, turns off, or dims the interior light when the interior light switch is in the DOOR position.

×: Equipped
—: Not equipped

Type		Installation position	Interior light control	Roof
Front map light	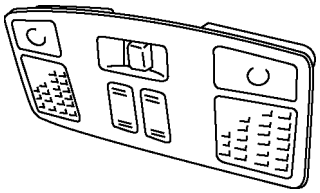	Front	×	Sunroof
Front map light	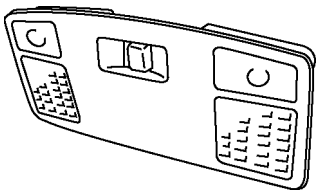		×	Normal roof
Rear map light	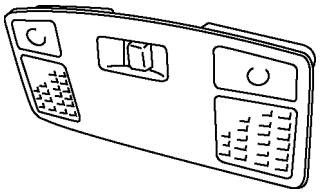	Rear	×	Both
Courtesy light	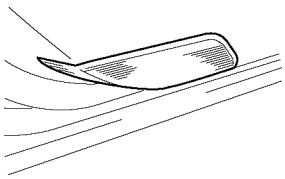	Door	×	
Cargo compartment light	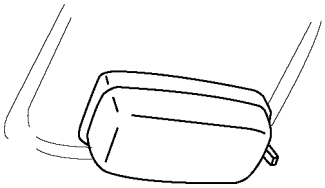	Cargo room	—	
Trunk compartment light	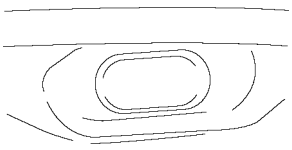	Trunk room	—	

T

INTERIOR LIGHT CONTROL SYSTEM

A6E811401052T03

System Diagram

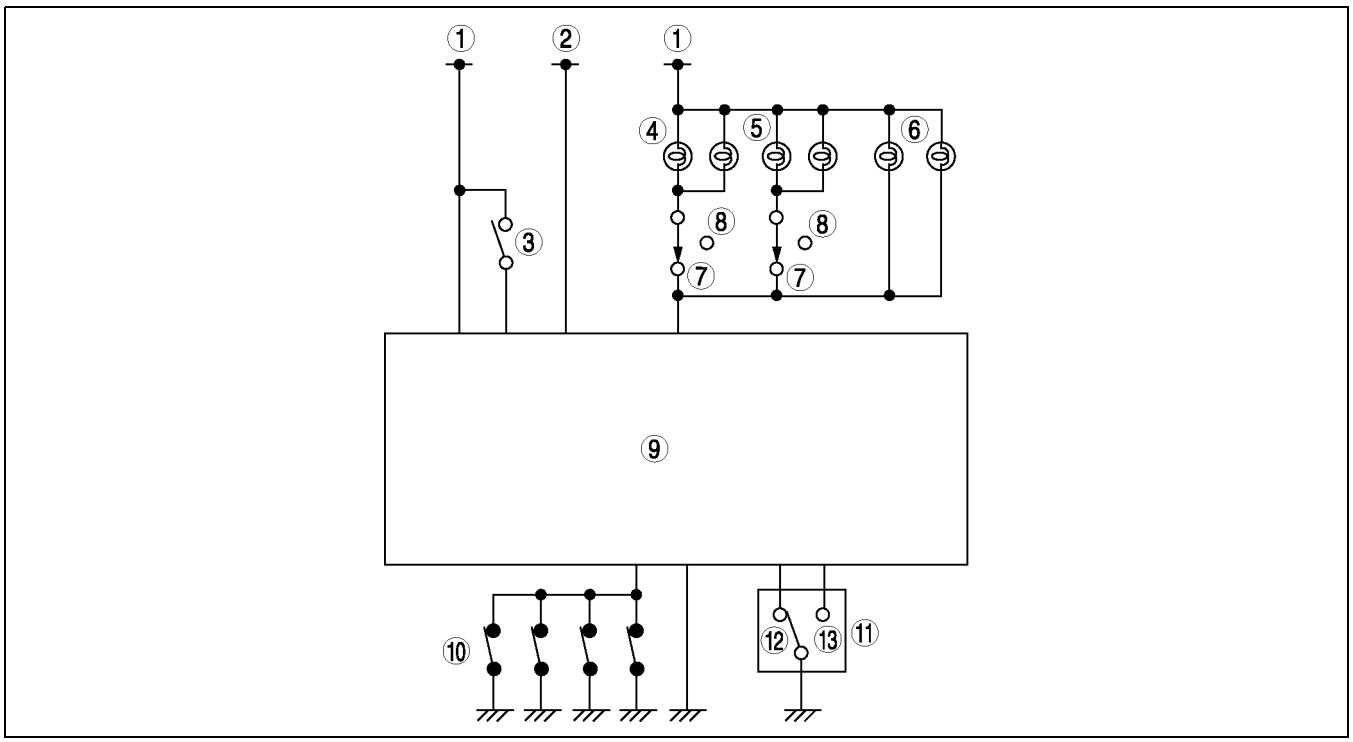

A6E8114T102

1	B+
2	IG1
3	Key reminder switch
4	Front map light
5	Rear map light
6	Courtesy light
7	DOOR

8	OFF
9	Door lock timer unit
10	Door switch
11	Door lock-link switch
12	Lock
13	Unlock

System Operation

- The interior light switch must be at DOOR position.

Condition before operation (When all conditions are satisfied)	Operation condition	Interior light		Cancel condition (When any condition is safisfied)
		Illumination time	Brightness	
• Ignition switch at LOCK or ACC position. (IG off.) • All doors are closed. (All door switches are off.)	Any door is open. (Any door switch is on.)	Approx. 5 minutes	100%	• All doors are closed. (All door switches are off.) • After illumination time.*1
• Key extracted from steering lock. (Key reminder switch is off.) • All doors are closed. (All door switches are off.) • Driver's door lock knob is locked. (Door lock-link switch is in lock position.)	Driver's door lock knob is unlocked. (Door lock-link switch is in unlock position.)	Approx. 30 seconds	100%	• Ignition switch at ON position. (IG on.) • Any door is open. (Any door switch is on.) • Driver's door lock knob is locked. (Door lock-link switch is in lock position.) • After illumination time.*1
• Key inserted into steering lock. (Key reminder switch is on.) • All doors are closed. (All door swiches are off.)	Key extracted from steering lock. (Key reminder switch is off.)	Approx. 15 seconds	100%	• Ignition switch at ON position. (IG on.) • Any door is open. (Any door switch is on.) • Driver's door lock knob is locked. (Door lock-link switch is in lock position.) • After illumination time.*1
• Ignition switch at LOCK or ACC position. (IG off.) • Any door is open. (Any door switch is on.) • Driver's door lock knob is unlocked. (Door lock-link switch is in unlock position.)	All doors are closed. (All door switches are off.)	Approx. 15 seconds	60%	• Ignition switch at ON position. (IG on.) • Any door is open. (Any door switch is on.) • Driver's door lock knob is locked. (Door lock-link switch is in lock position.) • After illumination time.*1

*1 : After interior light is turned off according to this cancel condition, the light will illuminate again when either of the following conditions are satisfied.

- After all doors are closed, then any door is reopened. (After all door switches are off, any door switch is on.)
- Ignition switch is at ON position. (IG on.)

T

Timing Chart

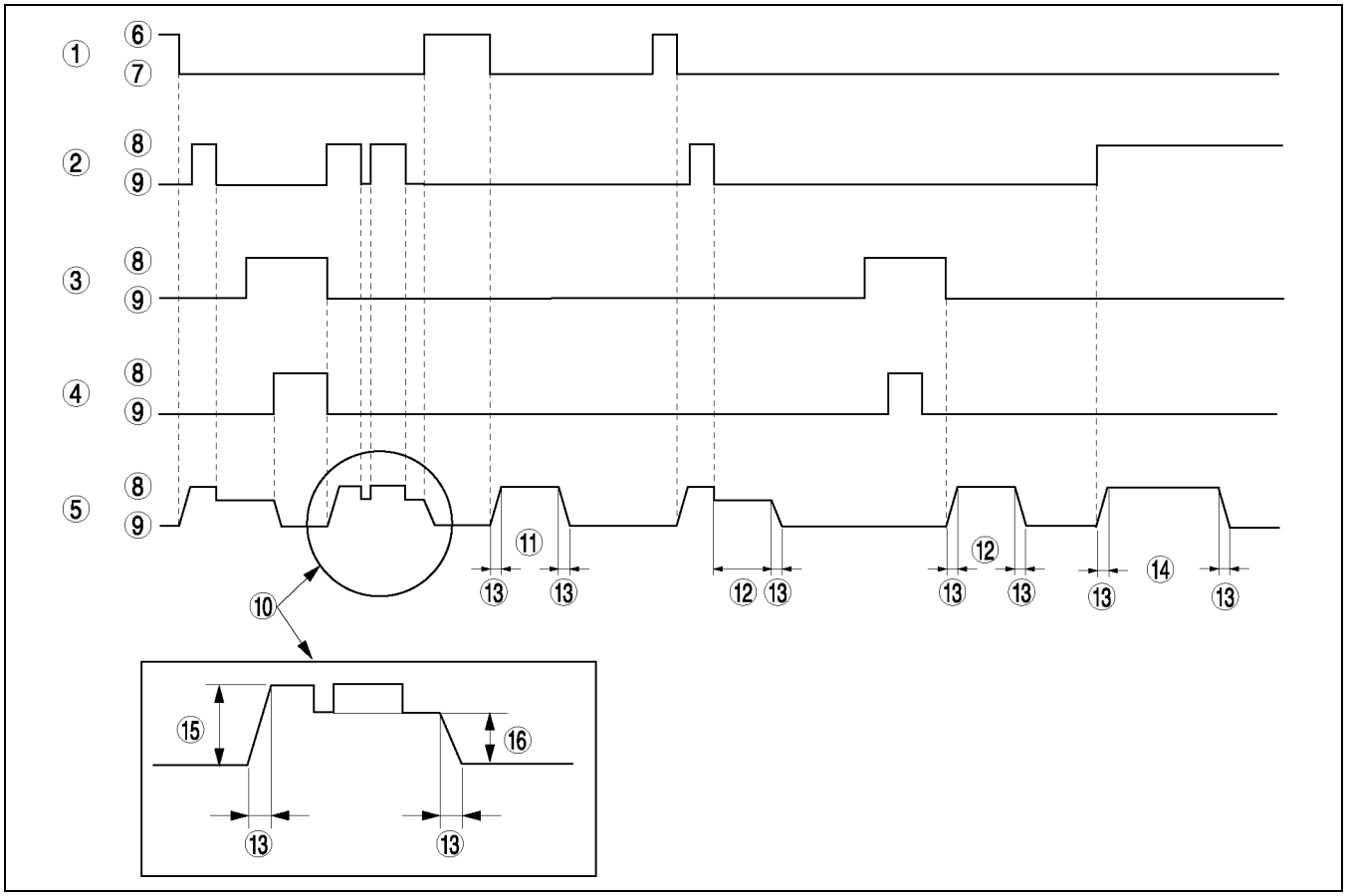

A6E8114T103

1	Door lock-link switch
2	Door switch
3	Key reminder switch
4	IG1
5	Front map light, Rear map light, courtesy light
6	Lock
7	Unlock
8	On

9	Off
10	View A
11	Approx. 30 seconds
12	Approx. 15 seconds
13	Approx. 1 seconds
14	Approx. 5 minutes
15	100%
16	60%

WIPER AND WASHER

OUTLINE

A6E811601052T01

Windshield

- The windshield wiper system has an autostop function, one-touch function, and intermittent function with various timer.
- The operation is the same as that of the 626 (GF) model.
- A vehicle-speed sensing type windshield wiper system, which automatically adjusts the intermittent wiping time according to vehicle speed, has been adopted.

Rear (5HB)

- The rear wiper system has an autostop function and intermittent function.
- The construction and operation is the same as that of the 626 (GF) model.

Headlight Cleaner

- The construction and operation is the same as that of the current 323 (BJ) model.

STRUCTURAL VIEW

A6E811601052T02

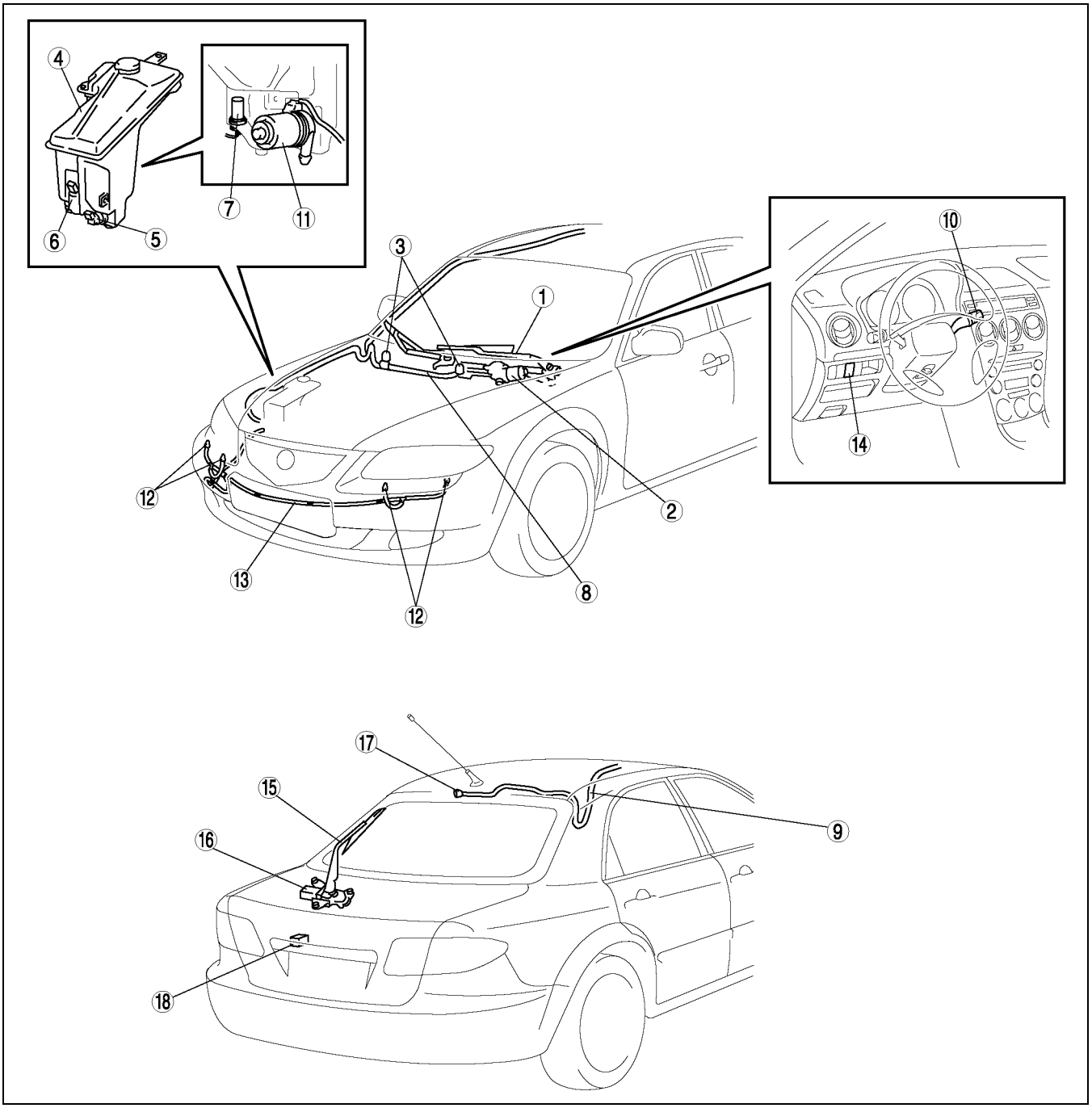

A6E8116T101

1	Windshield wiper arm and blade
2	Windshield wiper motor
3	Windshield washer nozzle
4	Washer tank
5	Windshield washer motor
6	Rear washer motor (5HB)
7	Washer fluid-level sensor (5HB)
8	Windshield washer hose
9	Rear washer hose (5HB)
10	Wiper and washer switch • Windshield wiper and washer switch • Rear wiper and washer switch (5HB)

11	Headlight cleaner motor
12	Headlight cleaner nozzle
13	Headlight cleaner hose
14	Headlight cleaner switch
15	Rear wiper arm and blade (5HB)
16	Rear wiper motor (5HB)
17	Rear washer nozzle (5HB)
18	Intermittent rear wiper relay (5HB)

WINDSHIELD WIPER SYSTEM (VEHICLE-SPEED SENSING TYPE)

A6E811601052T03

Function

- A vehicle-speed sensing type windshield wiper system, which automatically adjusts the intermittent wiping time according to vehicle speed, has been adopted. Accordingly, this system reduces the bothersome need for the driver to adjust the intermittent wiping time.

Structural View

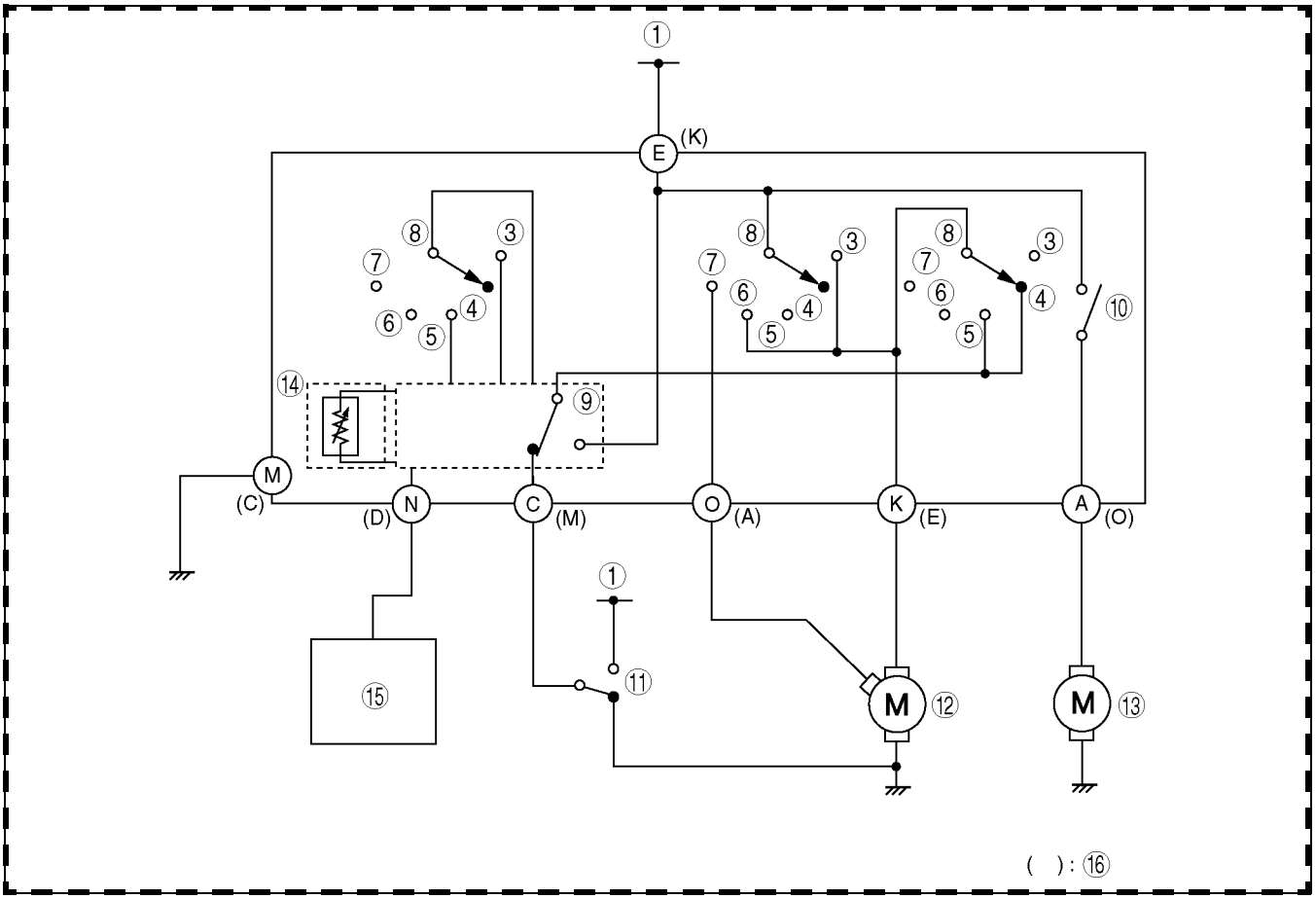

A6E8116T102

1	IG1
2	Wiper and washer switch
3	One-touch switch
4	OFF
5	INT
6	1
7	2
8	Wiper switch

9	Intermittent wiper relay
10	Washer switch
11	Autostop switch
12	Windshield wiper motor
13	Windshield washer motor
14	INT volume
15	ABS/TCS HU/CM or DSC HU/CM
16	Wiper and washer switch RH side

Operation

1. When the wiper switch is placed in the INT position, the intermittent wiper relay is turned on and current flows to the windshield wiper motor, which is driven at low speed.
2. Based on the vehicle speed signal sent from the ABS (DSC) HU/CM, the intermittent wiper relay controls the timing is as follows:
   - Vehicle speed of 0 km/h:
     — INT volume max.—approx. once each 11.6 seconds
     — INT volume min. —approx. once each 4.2 seconds
   - Vehicle speed of 30 km/h and above:
     — INT volume max.—approx. once each 9.6 seconds
     — INT volume min. —approx. once each 1.1 seconds

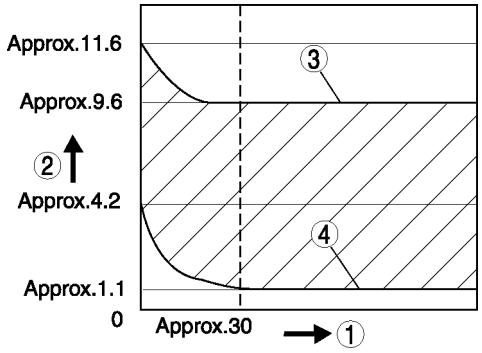

A6E8116T105

1	Vehicle speed (km/h)
2	Time (S)

3	INT volume max.
4	INT volume min.

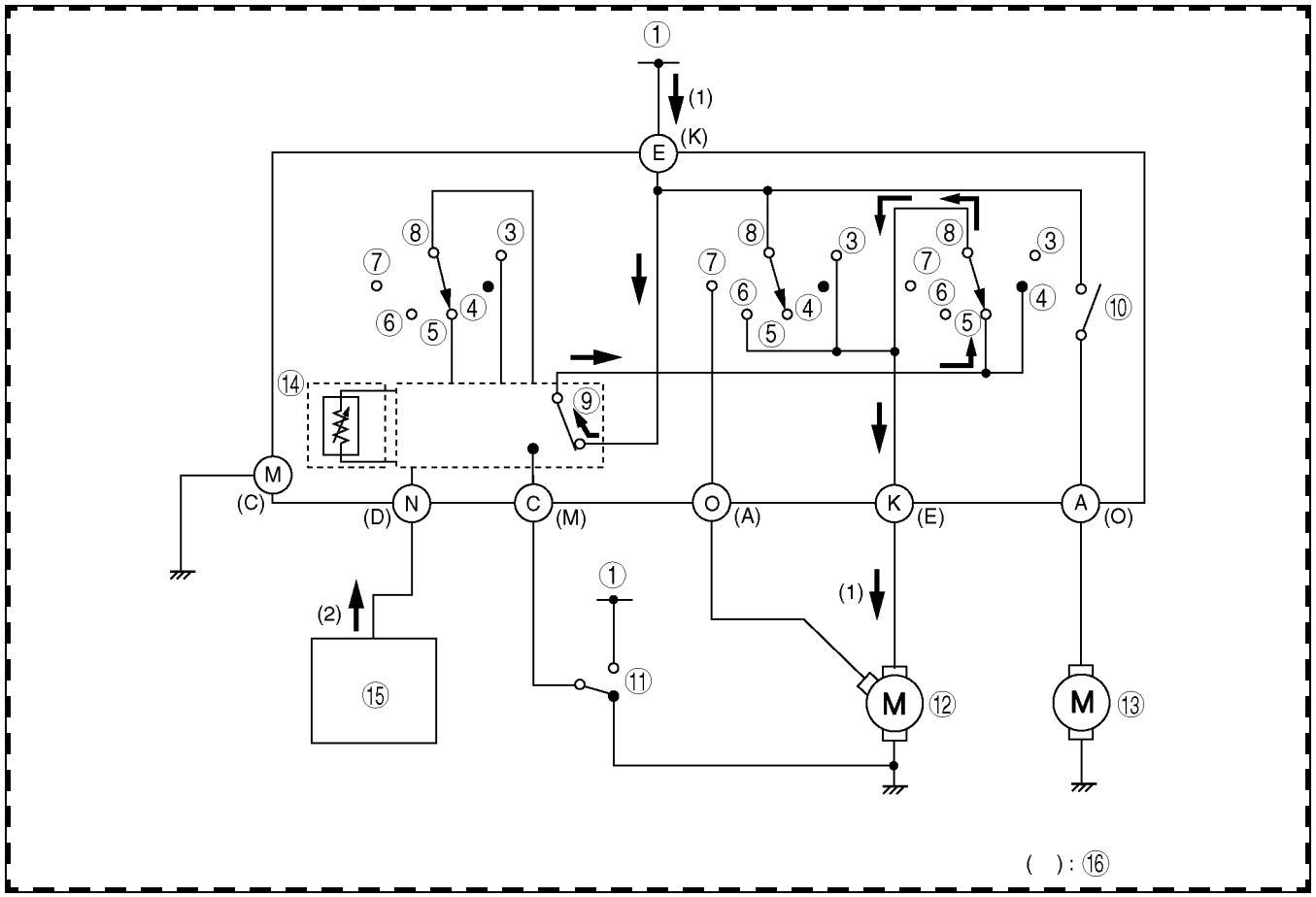

A6E8116T103

1	IG1
2	Wiper and washer switch
3	One-touch switch
4	OFF
5	INT
6	1
7	2
8	Wiper switch

9	Intermittent wiper relay
10	Washer switch
11	Autostop switch
12	Windshield wiper motor
13	Windshield washer motor
14	INT volume
15	ABS/TCS HU/CM or DSC HU/CM
16	Wiper and washer switch RH side

T

3. When the controlled intermittent time is passed, the intermittent wiper relay is turned off, stopping the flow of current to the windshield wiper motor, and the autostop function returns the wipers to the resting position. This action is repeated intermittently.

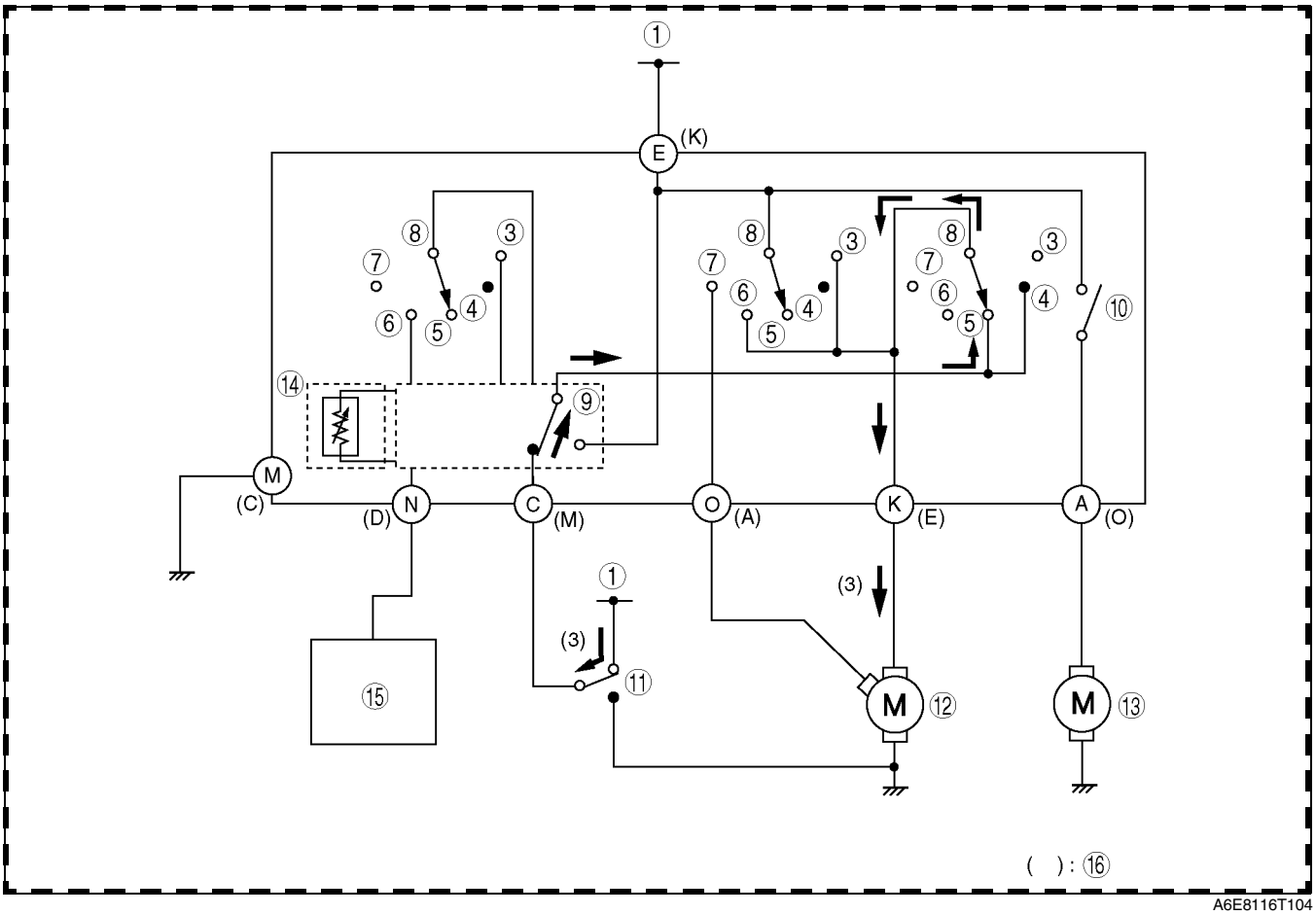

A6E8116T104

1	IG1
2	Wiper and washer switch
3	One-touch switch
4	OFF
5	INT
6	1
7	2
8	Wiper switch

9	Intermittent wiper relay
10	Washer switch
11	Autostop switch
12	Windshield wiper motor
13	Windshield washer motor
14	INT volume
15	ABS/TCS HU/CM or DSC HU/CM
16	Wiper and washer switch RH side

WARNING AND INDICATOR SYSTEM

OUTLINE

A6E811801069T01

- A CAN system has been adopted for the control signals of the input/output communication circuit of the meters, gauges and warning and indicator lights. (See T–5 OUTLINE.)
- LEDs have been adopted for all warning and indicator lights installed on the instrument cluster.
- The information display, which includes clock, audio system, and A/C system displays, has been placed in the center of the instrument panel. It also includes the drive information system, depending on the vehicle grade.
- A trumpet-type horn with spiral, resonant pipes, has been adopted.

INSTRUMENT CLUSTER

A6E811855430T01

Structural View

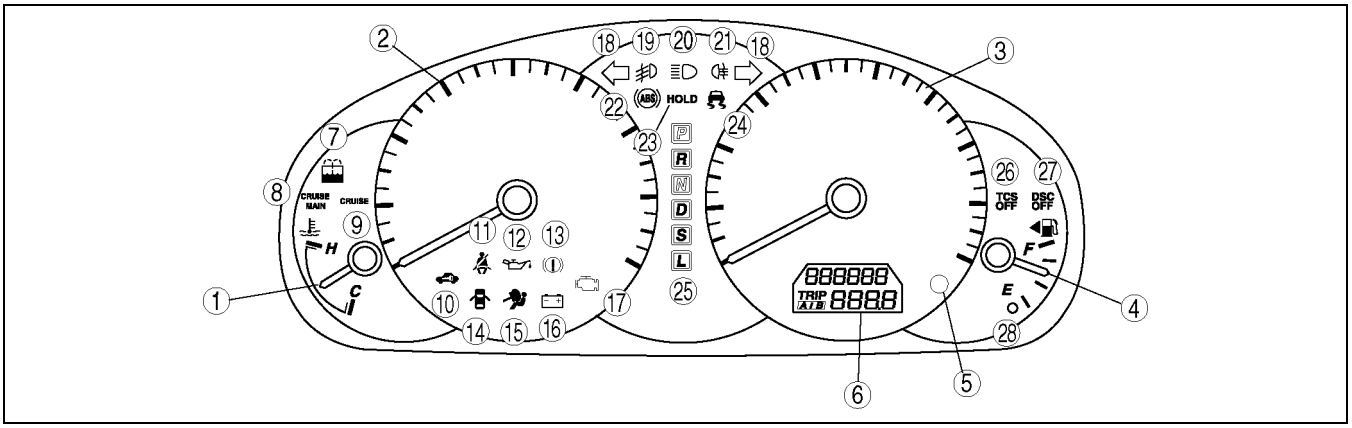

A6E8118T001

1	Water temperature gauge
2	Tachometer
3	Speedometer

4	Fuel gauge
5	Odometer/tripmeter switch
6	Odometer/tripmeter

T

X: Applied

No.	Warning and indicator light	Input signal source	CAN system	Note
7	Washer fulid-level warning light	Washer fulid-level sensor	—	—
8	Cruise main indicator light	Cruise actuator	—	With cruise control system
9	Cruise set indicator light	Cruise actuator	—	With cruise control system
10	Security light	• PCM • Theft-deterrent control module • Door lock timer unit	—	—
11	Seat belt warning light	Buckle switch	—	—
12	Oil pressure warning light	Oil pressure switch	—	—
13	Brake system warning light	• Parking brake switch • Brake fluid level sensor	—	—
14	Door ajar warning light	Door switch	—	—
15	Air bag system warning light	SAS unit	—	—
16	Generator warning light	PCM	X	—
17	MIL	PCM	X	—
18	Turn indicator light	Turn switch	—	—
19	Front fog light indicator light	Front fog light relay	—	European (L.H.D. U.K.) specs.
20	High-beam indicator light	Head light switch	—	—
21	Rear fog light indicator light	Rear fog light relay	—	European (L.H.D. U.K.) specs.
22	ABS warning light	ABS (ABS/TCS) HU/CM	X	Vehicles with ABS (ABS/TCS)
		DSC HU/CM	X	Vehicles with DSC
23	HOLD indicator light	PCM	X	ATX
24	TCS indicator light	ABS/TCS HU/CM	X	Vehicles with TCS
	DSC indicator light	DSC HU/CM	X	Vehicles with DSC
25	Selector indicator light	PCM	X	ATX

No.	Warning and indicator light	Input signal source	CAN system	Note
26	TCS OFF light	ABS/TCS HU/CM	X	Vehicles with TCS
27	DSC OFF light	DSC HU/CM	X	Vehicles with DSC
28	Fuel-level warning light	Fuel gauge sender unit	—	—

Specifications

Item				Specification
Speedometer	Meter type			Stepping motor type
	Indication range		(km/h)	0—240
			(mph {km/h})	0—150 {0—240}
	Input signal communication system			CAN system
	Input signal source	Vehicles with ABS (ABS/TCS) HU/CM		ABS (ABS/TCS) HU/CM
		Vehicles with DSC		DSC HU/CM
		Vehicles without ABS		PCM
	Rated voltage		(V)	DC 12
Tachometer	Meter type			Stepping motor type
	Indication range		(rpm)	0—8,000
	Red zone		(rpm)	6,500—8,000
	Input signal communication system			CAN system
	Input signal source			PCM
	Rated voltage		(V)	DC 12
Fuel gauge	Meter type			Stepping motor type (Reset-to-zero type)
	Input signal communication system			Conventional communication system
	Input signal source			Fuel tank gauge unit
	Rated voltage		(V)	DC 12
Water temperature gauge	Meter type			Stepping motor type (Medium range stabilized type)
	Input signal communication system			CAN system
	Input signal source			PCM
	Rated voltage		(V)	DC 12
Odometer/ Tripmeter	Display			LCD
	Indication digits			Odometer: 6 digits, Tripmeter: 4 digits
	Input signal communication system			CAN system
	Input signal source	Vehicles with ABS (ABS/TCS) HU/CM		ABS (ABS/TCS) HU/CM
		Vehicles with DSC		DSC HU/CM
		Vehicles without ABS		PCM
	Rated voltage		(V)	DC 12

SYSTEM WIRING DIAGRAM

A6E811855430T02

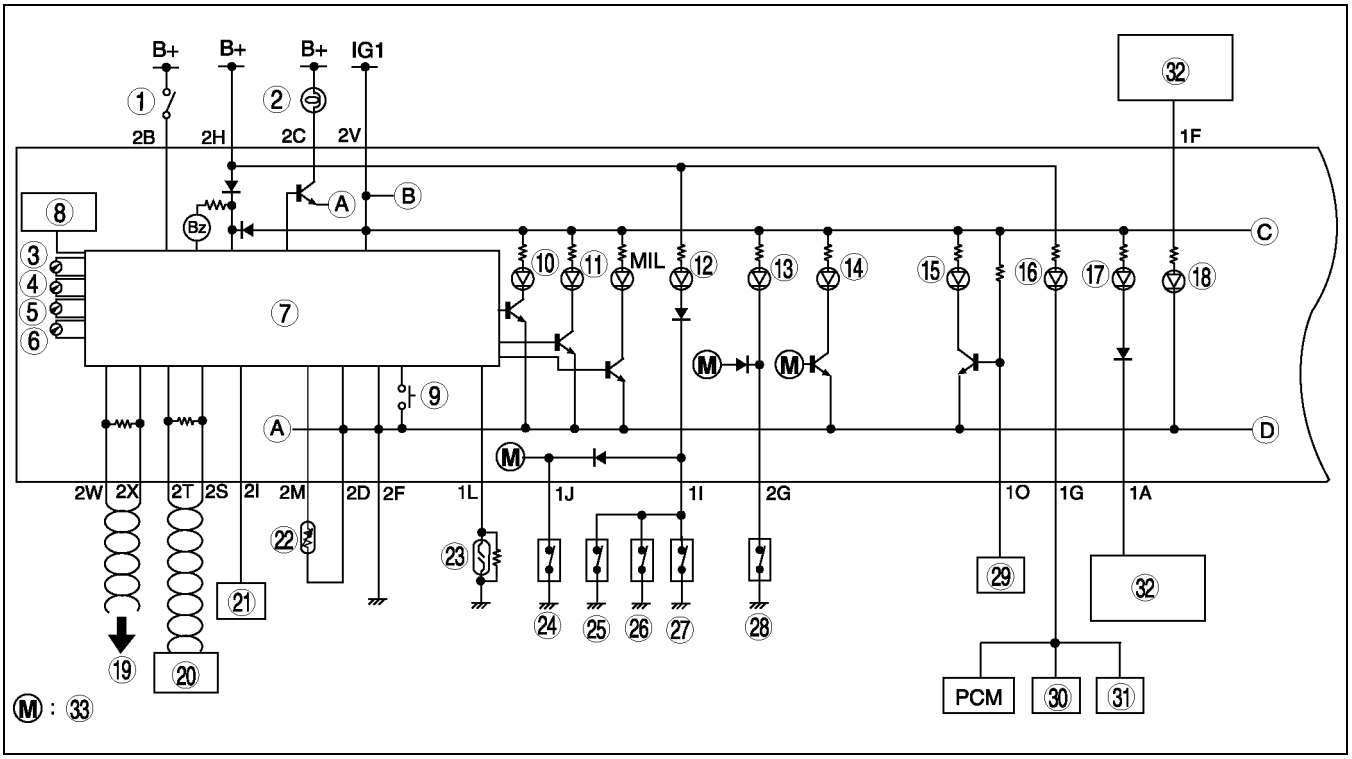

A6E8118T002

1	Key reminder switch
2	Ignition key illumination
3	Speedometer
4	Tachometer
5	Fuel gauge
6	Water temperature gauge
7	Microcomputer
8	Odometer/tripmeter
9	Odometer/tripmeter switch
10	Fuel-level warning light
11	Generator warning light
12	Door ajar warning light
13	Seat belt warning light
14	HOLD indicator light
15	Air bag system warning light
16	Security light
17	Cruise set indicator light

18	Cruise main indicator light
19	To PCM, ABS (ABS/TCS) HU/CM (with (ABS/TCS)) or DSC HU/CM (with DSC)
20	Audio unit
21	Panel light control switch
22	Fuel gauge sender unit
23	Brake fluid-level sensor
24	Door switch (driver's side)
25	Door switch (passenger's side)
26	Door switch (rear left side)
27	Door switch (rear right side)
28	Buckle switch
29	SAS unit
30	Door lock timer unit
31	Theft-deterrent control module
32	Cruise actuator
33	To microcomputer

T

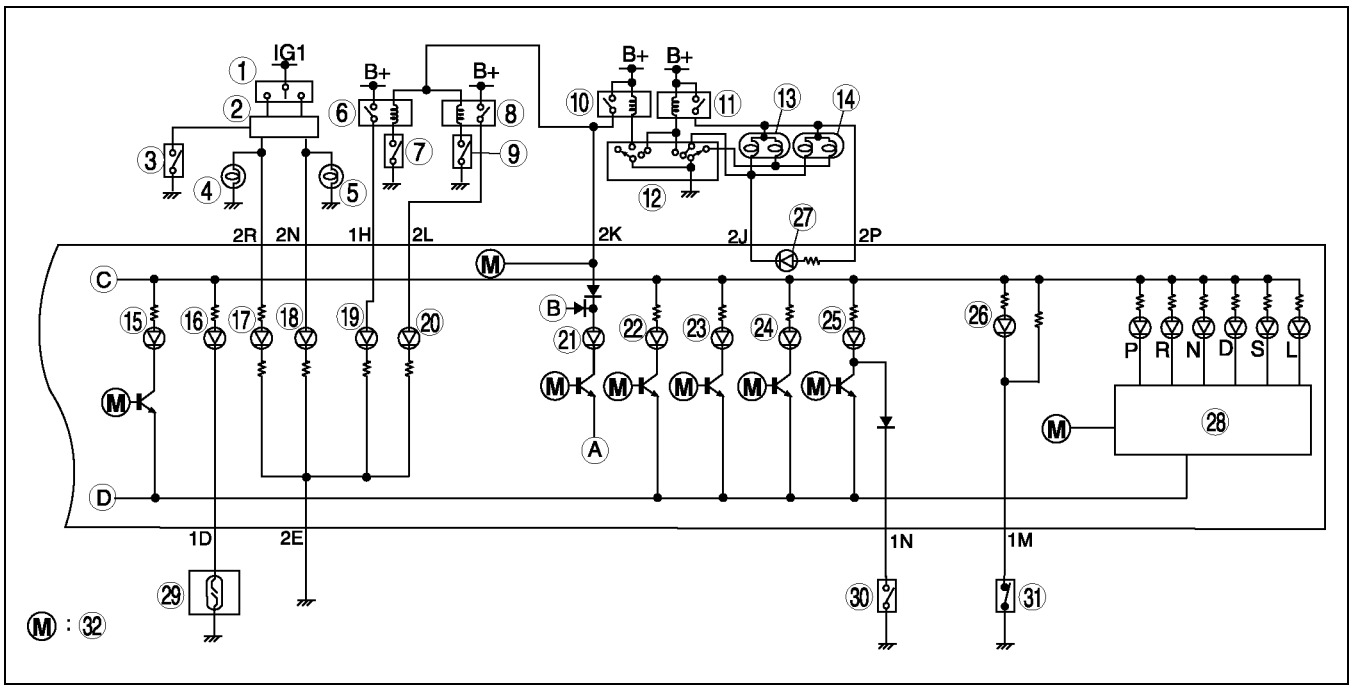

A6E8118T003

1	Turn switch
2	Flasher unit
3	Hazard warning switch
4	Turn light (left)
5	Turn light (right)
6	Front fog light relay
7	Front fog light switch
8	Rear fog light relay
9	Rear fog light switch
10	TNS relay
11	Headlight relay
12	Headlight switch
13	Headlight (left)
14	Headlight (right)
15	TCS OFF light
16	Washer fluid-level warning light

17	Turn indicator light (left)
18	Turn indicator light (right)
19	Front fog light indicator light
20	Rear fog light indicator light
21	Instrument cluster illumination
22	DSC/TCS indicator light
23	DSC OFF light
24	ABS warning light
25	Brake system warning light
26	Oil pressure warning light
27	High beam indicator light
28	Selector indicator drive circuit
29	Washer fluid-level sensor
30	Parking brake switch
31	Oil pressure switch
32	To microcomputer

INPUT/OUTPUT CHECK MODE

A6E811855430T03

- The microcomputer built into instrument cluster detects the quality of input signal or individual part.
- Input/output check mode has both input circuit check and individual part check functions.
- The operating order of the input/output check mode is the same as that of the current MPV (LW) model.
- A comparison of available DTCs for the Mazda6 and the current MPV (LW) model is shown below.

Input circuit check

X: Applied
—: Not applied

No.	Mazda6	MPV (LW)	Parts sending input signal
01	X	X	Buckle switch
04	X	X	Door switch
05	—	X	Door lock-link switch
07	—	X	Rear window defroster switch
08	X	X	TNS relay
09	—	X	Headlight switch
10	—	X	PCM
11	—	X	PCM
22	X	X	Fuel gauge sender unit
24	—	X	ECT sensor
29	—	X	Rear fog light switch
31	—	X	Key reminder switch
40	—	X	Front fog light relay
41	—	X	P positionswitch

Individual circuit check

X: Applied
—: Not applied

No.	Mazda6	MPV (LW)	Parts sending input signal
12	X	X	Speedometer
13	X	X	Tachometer
14	X	X	Buzzer
15	—	X	Rear fog light relay
16	X	X	Fuel-level warning light
17	—	X	Rear window defroster indicator light
18	X	X	Ignition key illumination
20	—	X	Rear window defroster relay
21	—	X	Door lock timer unit
23	X	X	Fuel gauge
25	X	X	Water temperature gauge
26	X	X	LCD
27	—	X	Interior light
42	—	X	Key interlock solenoid

T

PID/DATA MONITOR AND RECORD

A6E811855430T04

- The PID/DATA monitoring items for the instrument cluster is as shown in the table below.

Monitor item table

—: Not applicable

PID item	Definition	Unit/Condition		Terminal
CCNT_HE	Continuous codes	Number of continuous codes		—
ECT_GAUGE	Temperature gauge	°C	°F	2W, 2X
FUEL	Fuel flow	l/min		2M
ODOMETR	Total distance	km	mile	2W, 2X
SPEEDSG	Speedometer	km/h	mile/h	
RPM	Tachometer	rpm		

DRIVE INFORMATION SYSTEM

A6E811801069T02

Outline

- The microcomputer in the instrument cluster calculates ambient temperature data, distance driven and specified time data, fuel consumption data, and fuel remaining data according to signal from signal source.
- Using these data, the microcomputer displays the following in the information display;
  - — Instant fuel economy
  - — Average fuel economy
  - — Distance to empty
  - — Average vehicle speed
- The driver information system switch comprises an INFO switch.

Structural View

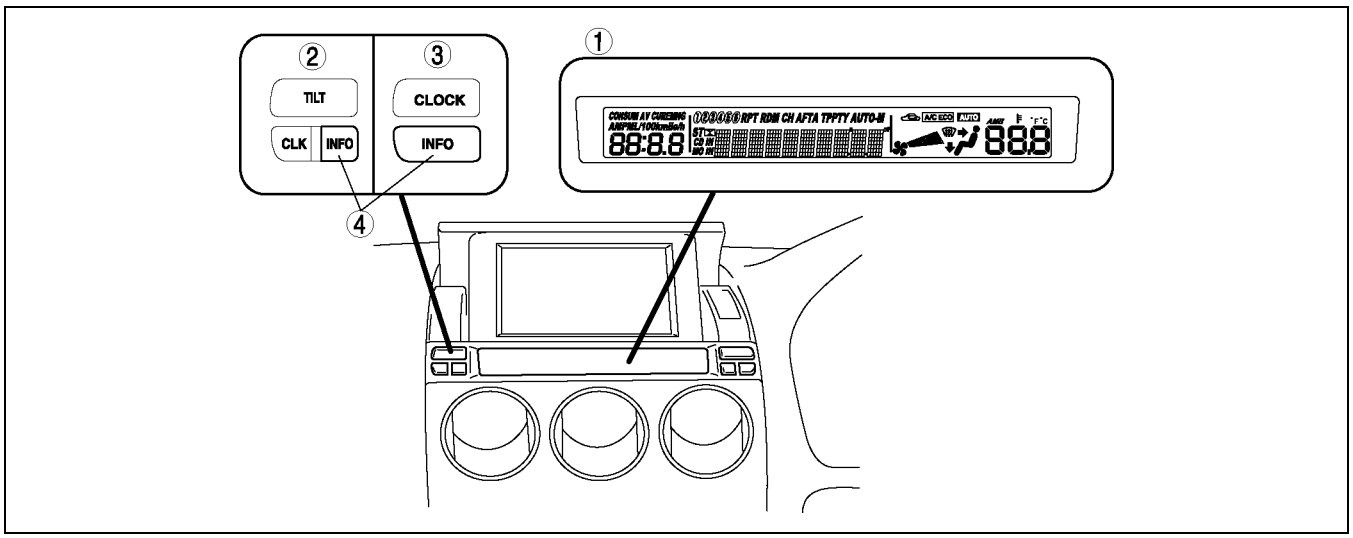

A6E8118T200

1	Information display
2	With car navigation system

3	Without car navigation system
4	INFO switch

System wiring diagram

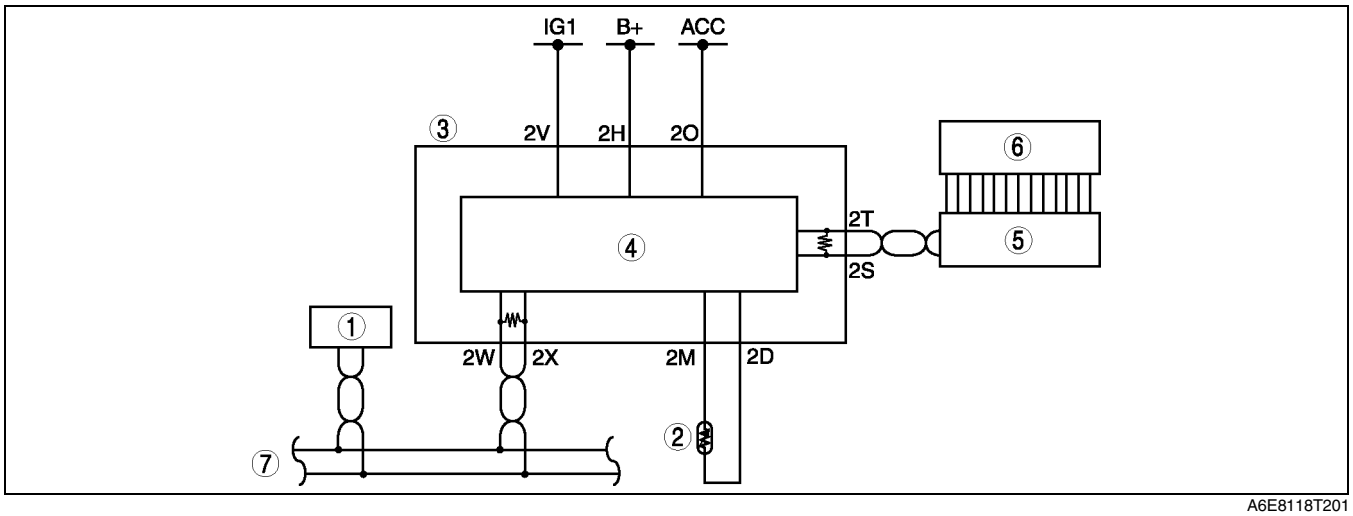

A6E8118T201

1	PCM
2	Fuel gauge sender unit
3	Instrument cluster
4	Microcomputer

5	Audio unit
6	Information display
7	CAN system

Operation

Drive information system switch

- The drive information system switch comprises an INFO switch.
- The modes can be charged in a cyclic pattern by pressing the INFO switch.

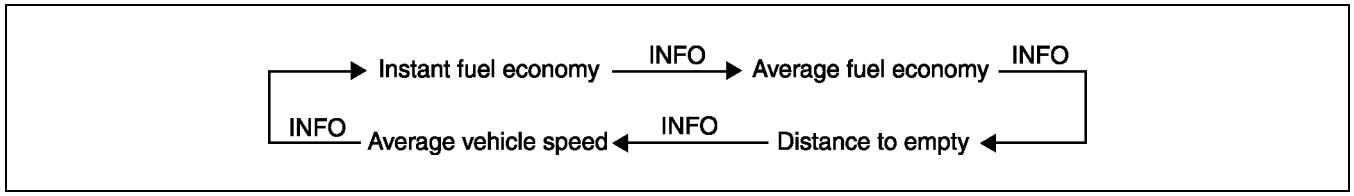

A6E8118T202

- The data displayed at the time can be reset by holding the INFO switch for 1 second or more. Data are calculated as soon as the INFO switch is released.

Drive information system display

- The display changes for each mode as shown.

Market	Instant fuel economy	Average fuel economy	Distance to empty	Average vehicle speed
U.K. specs.	CONSUM CUR L/100 mile 12.8	CONSUM AV L/100 mile 12.8	REMNG mile 212	AV mile/h 70
Except U.K. specs.	CONSUM CUR L/100km 10.5	CONSUM AV L/100km 10.5	REMNG km 310	AV km /h 72

Construction

Instant fuel economy mode

- Instant fuel economy is calculated from trip distance and fuel consumption in the previous 2 seconds.
- Instrument fuel economy is updated from every 2 seconds. (the indication only changes when the difference between the present value and the next value is 0.8 L/100 km (0.8 L/100 mile) or more.)
  Calculation
  Instant fuel economy (L/100 km or L/100 mile)=
  Fuel consumption over 2 seconds (L) / Distance travelled over last 2 seconds (km or mile) × 100
- When fuel is not consumed, for example, when applying an engine brake, <0.0 L/100 km> or <0.0 L/100 mile> is displayed.
- When the vehicle speed is in the invalid display range (see the following chart), <----/100 km> or <----/100 mile> is displayed.

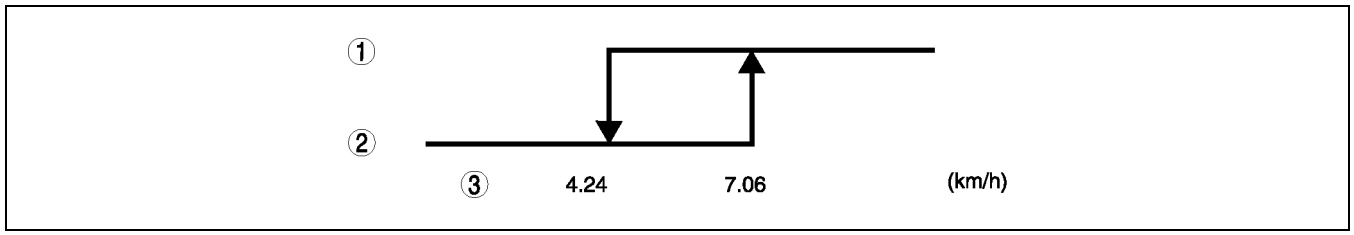

A6E8118T211

1	Valid (normal) display
2	Invalid display

3	Vehicle speed

T

Average fuel economy mode

- Average fuel economy is calculated from trip distance and fuel consumption since the time when the battery is connected or the average fuel economy data is reset.
- Average fuel economy is updated every 1 minute.
  Calculation
  Average fuel economy (L/100 km or L/100 mile)=
  Cumulative fuel consumption (L) / Cumulative trip distance (km or mile) × 100
- When the cumulative trip distance is 0 km (0 mile) (the vehicle has not traveled since the battery was last connected or average fuel economy function was last reset), <999.9 L/km> or <999.9 L/100 mile> is displayed.
- When the INFO switch is pressed for 1 second or more while displaying the average fuel economy, the cumulative fuel consumption data and cumulative trip distance data are reset.
- After the data are reset, <---- L/100 km> or <---- L/100 mile> is displayed for 1 minute.

Distance to empty mode

- Distance to empty is calculated from fuel consumption for last 32 km (32 mile) driven and remaining fuel amount.
- Average vehicle speed is updated every 10 seconds.
  Calculation
  Distance to empty (km or mile)=
  Remaining fuel amount × 32 (km or mile) / Fuel consumption for last 32 (km or mile) driven
- <---- km> or <---- mile> is displayed until the vehicle drives 100 km (100 mile) from the time when the battery is last connected or when the distance to empty is less than 50 km (50 mile).

Average vehicle speed mode

- Average vehicle speed is calculated from distance driven and specified time* since the time when the battery is last connected or the average vehicle speed data is last reset.
- Average vehicle speed is updated every 10 seconds.
  Calculation
  Average vehicle speed (km/h or mile/h)=
  Cumulative distance driven (km or mile) / Cumulative specified time (hour)
- When the INFO switch is pressed for 1 second or more while displaying the average vehicle speed, the cumulative distance driven data cumulative specified time data are reset.
- After the data are reset, <---- km/h> or <---- mile/h> is displayed for 1 minute.

*: Specified time is the period of time from when the ignition switch is turned to ON position, to when the microcomputer starts calculating the average of vehicle speed.

HORN

A6E811866790T01

- A trumpet-type hone with spiral, resonant pipes, has been adopted.

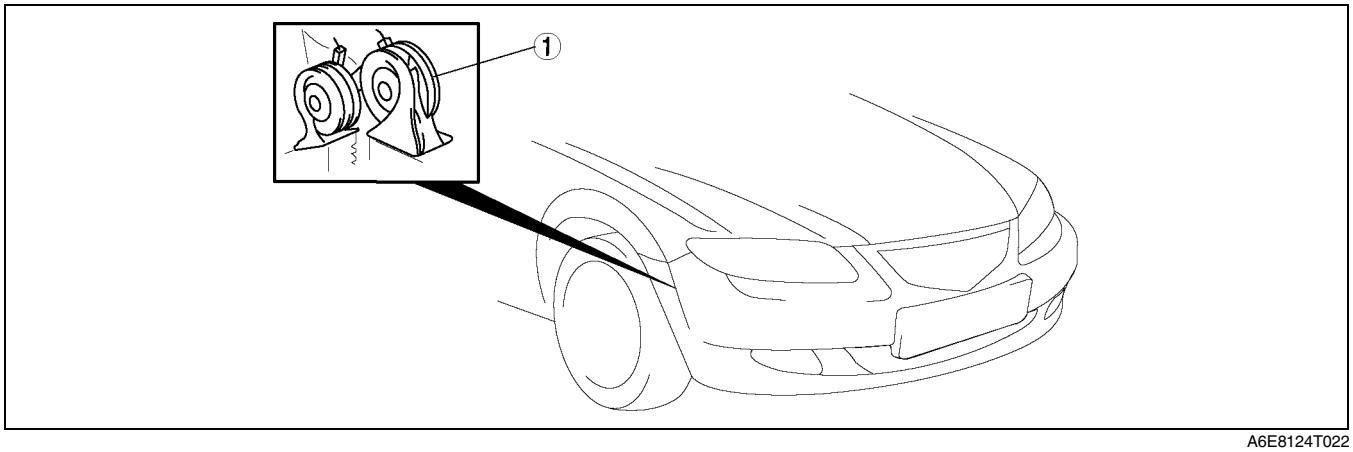

A6E8124T022

1	Horn

THEFT-DETERRENT SYSTEM

OUTLINE

A6E812050000T01

- The theft-deterrent system includes sound and light alarms that activate when the bonnet, the trunk lid (4SD) or liftgate (5HB), or a door is opened by means other than the transmitter. The turn lights flash and the horn and the theft-deterrent siren sound.
- When the transmitter unlock button is pressed, the alarms stop.
- An intruder sensor has been installed in the forward part of the roof (without sliding sunroof) or in the center part of the roof (with sliding sunroof). The intruder sensor senses movement in the vehicle based on radio waves, and sends an alert signal to the theft-deterrent control module.
- A theft-deterrent siren has been installed on the rear, left side of the trunk (4SD) or liftgate (5HB). The theft-deterent siren includes an internal back-up power supply so that if power from the battery is cut by any means, the siren will still sound.

STRUCTURAL VIEW

A6E812050000T02

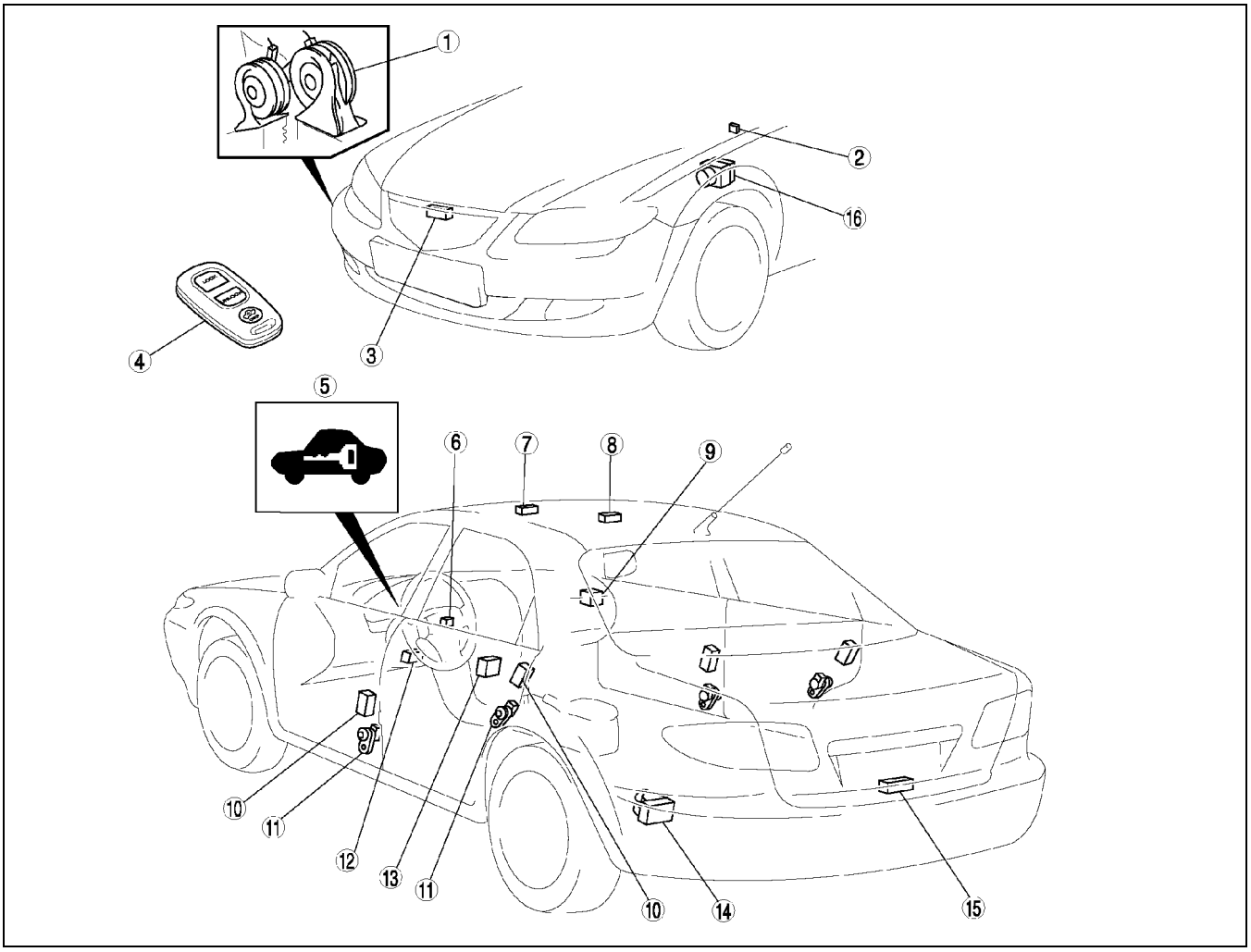

A6E8120T002

1	Horn
2	Horn relay
3	Bonnet switch
4	Transmitter
5	Security light
6	Key reminder switch
7	Intruder sensor (Vehicles without sliding sunroof)
8	Intruder sensor (Vehicles with sliding sunroof)
9	Door lock timer unit

10	Door lock-link switch
11	Door switch
12	Flasher unit
13	Theft-deterrent control module
14	Theft-deterrent siren
15	Trunk lid light switch (4SD)
	Cargo compartment light switch (5HB)
16	ABS (ABS/TCS) HU/CM

SYSTEM WIRING DIAGRAM

A6E812050000T03

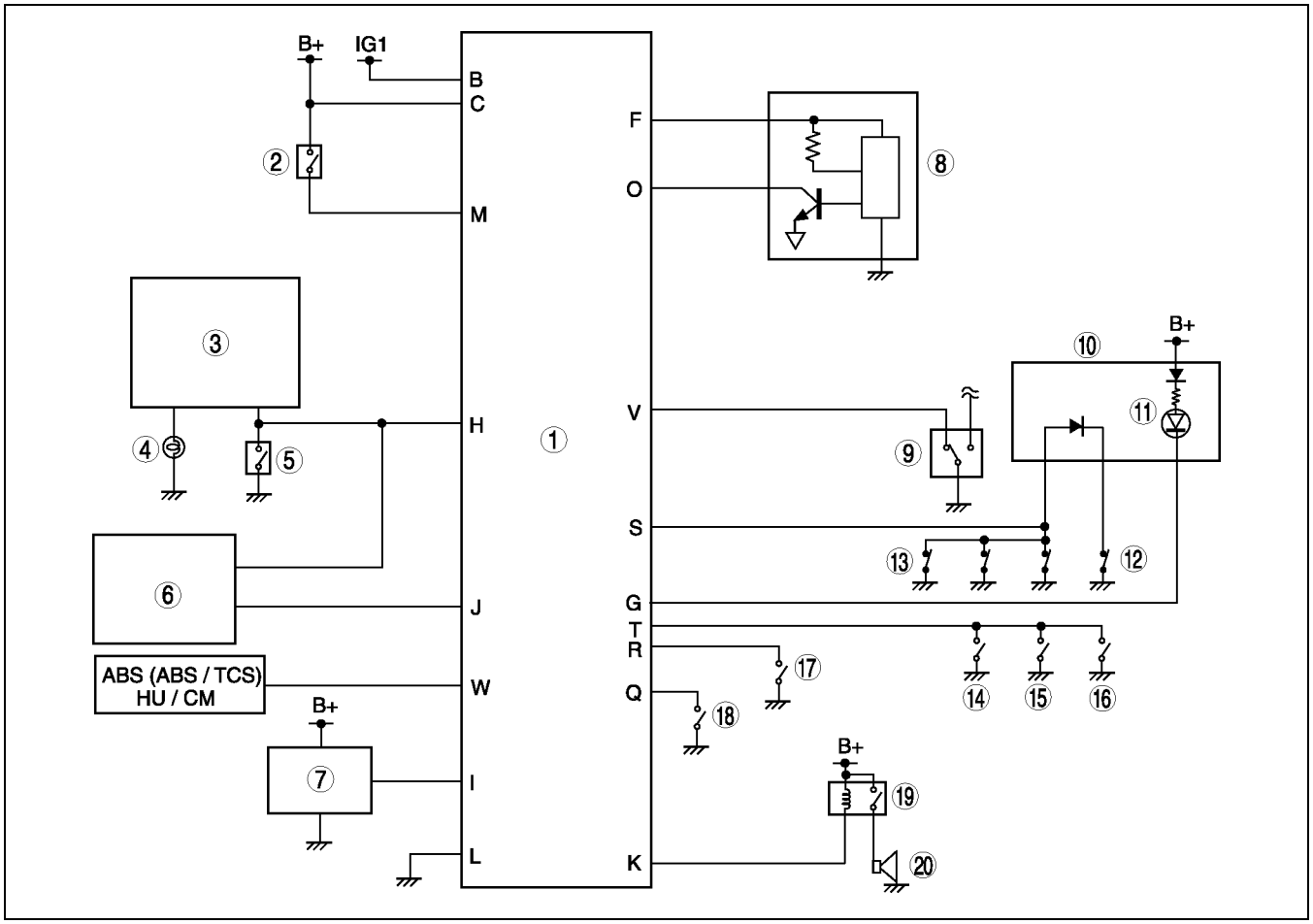

A6E8120T001

1	Theft-deterrent control module
2	Key reminder switch
3	Flasher unit
4	Turn light
5	Hazard warning switch
6	Door lock timer unit
7	Theft-deterrent siren
8	Intruder sensor
9	Driver's door lock-link switch
10	Instrument cluster
11	Security light

12	Door switch (driver's side)
13	Door switch (except driver's side)
14	Passenger's door lock-link switch
15	Rear door lock-link switch (right)
16	Rear door lock-link switch (left)
17	Trunk compartment light switch (4SD)
	Cargo compartment light switch (5HB)
18	Bonnet switch
19	Horn relay
20	Horn

SYSTEM FLOWCHART

A6E812050000T04

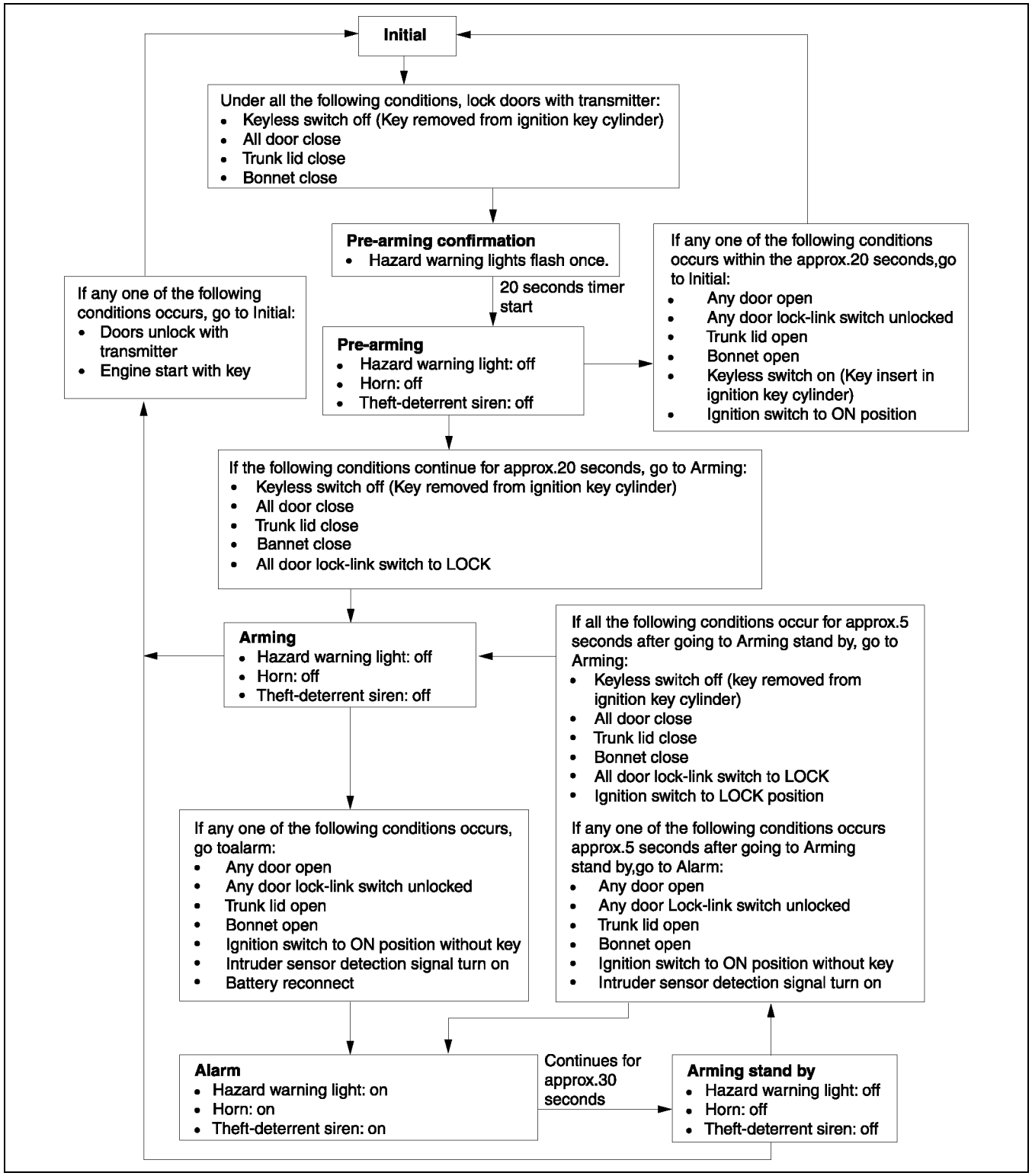

A6E8120T007

T

THEFT-DETERRENT SIREN

A6E812050000T05

- The theft-deterrent siren is located on the rear, left side of the trunk lid (4SD) or liftgate (5HB).
- Controlled by the following vehicle conditions:
  - — Standard alert control
  - — Open circuit alert control

Standard Alert Control

- The siren beeps when receiving an alert initialization signal from the theft-deterrent control module. When a go-to-initial signal is received the siren is stopped.

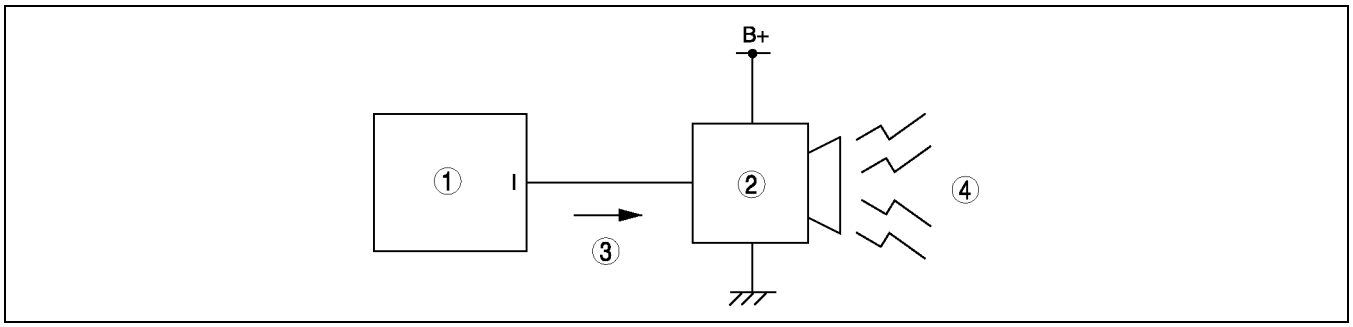

A6E8120T004

1	Theft-deterrent control module
2	Theft-deterrent siren

3	Alert initialization signal
4	Siren beeps

Open Circuit Alert Control

- A back-up power supply is integrated in the theft-deterrent siren.
- When an open circuit is detected in the related wiring harness, the theft-deterrent siren beeps using the back-up power supply.
- If any one of the following conditions are met, the siren is stopped:
  - — Detects that all related wiring harness are properly connected.
  - — Receives go-to-initial signal from the theft-deterrent control module.

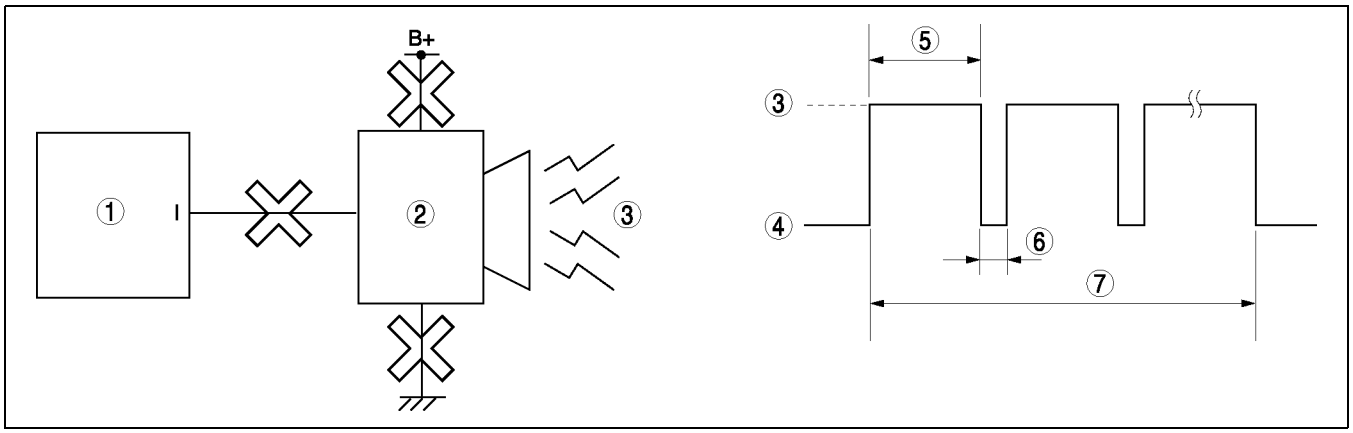

A6E8120T005

1	Theft-deterrent control module
2	Theft-deterrent siren
3	Siren beeps
4	Siren stops

5	Approx. 30 seconds
6	Approx. 5 seconds
7	Maximum 9 cycles

INTRUDER SENSOR

A6E812050000T06

Outline

- The intruder sensor is located in center part of the roof on sliding sunroof-equipped vehicles or the forward part of the roof on sliding sunroof non-equipped vehicles.
- The intruder sensor detects movement in the vehicle by radio waves and sends the detection signal to the theft-deterrent control module.
- An intruder sensor cut-off switch has been installed on the keyless entry system transmitter. If the intruder sensor cut-off switch is on while the theft-deterrent system is pre-armed, intruder sensor radio wave output is cut, and movement detection is stopped.

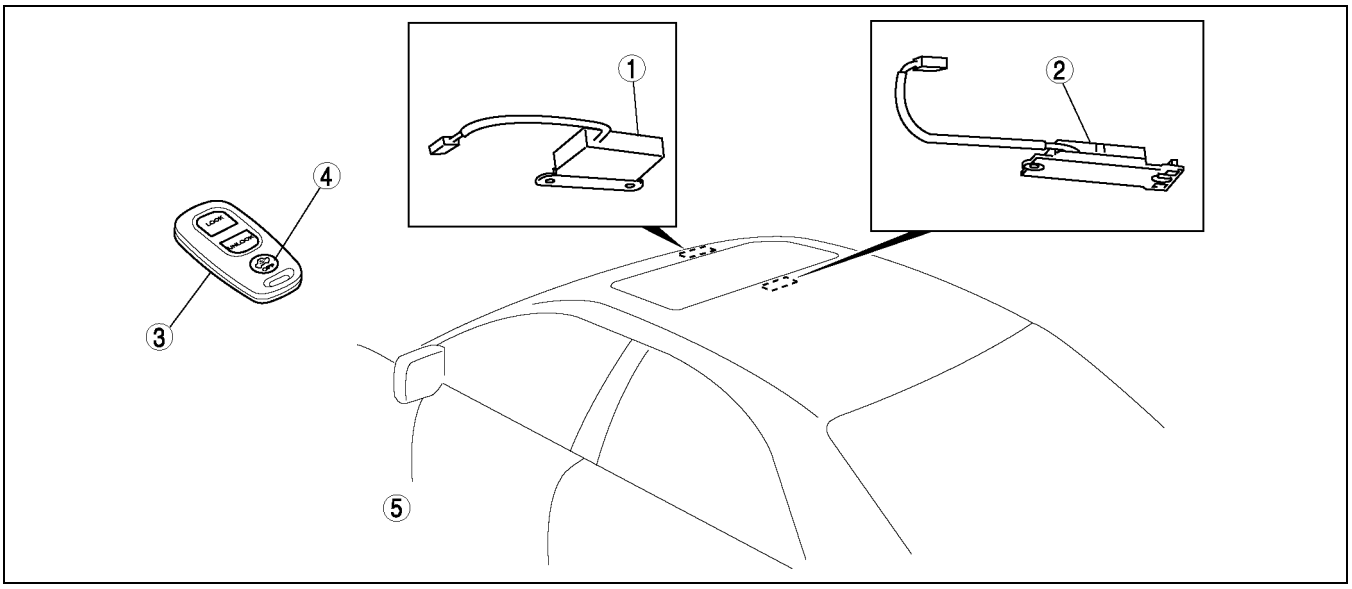

A6E8120T003

1	Intruder sensor (without sliding sunroof)
2	Intruder sensor (with sliding sunroof)

3	Transmitter
4	Intruder sensor cut-off switch

T

Operation

1. When the theft-deterrent system is armed, the intruder sensor outputs a 2.45 GHz radio wave in the passenger compartment. The intruder sensor detects phase differences in radio waves (reflected waves) that are output and bounced off a target object.
2. When a phase difference in reflected waves occurs by movement in the vehicle (intruder), the CPU calculates the level of phase difference.
3. If the level of phase difference is higher than specified, the intruder sensor sends a detection signal to the theft-deterrent module.

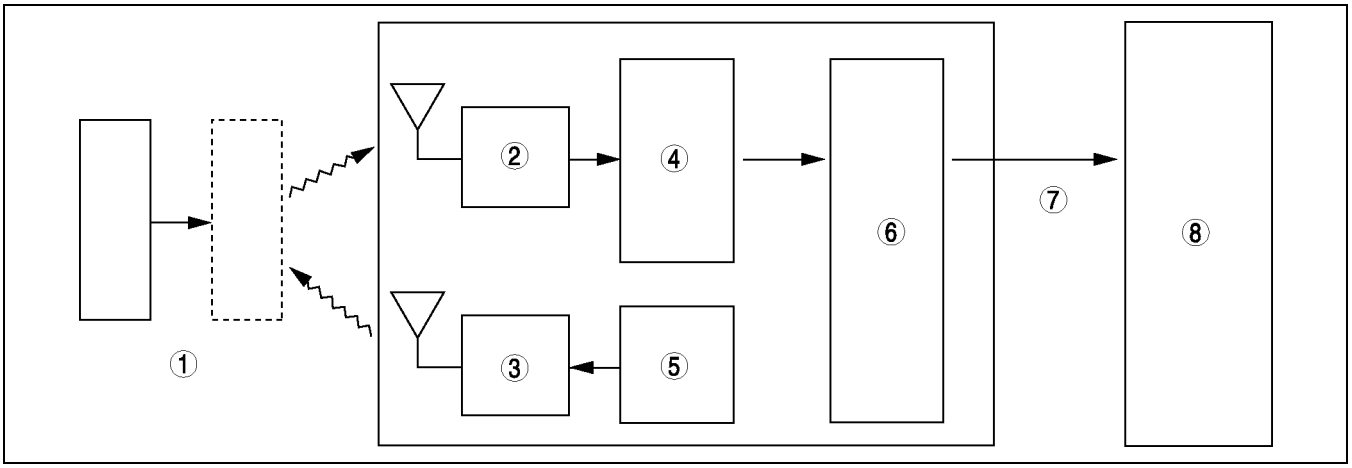

A6E8120T006

1	Target object
2	Receiver
3	Transmitter
4	Phase detection area

5	Oscillator
6	CPU
7	Detection signal output
8	Theft-deterrent control module

IMMOBILIZER SYSTEM

OUTLINE

A6E812267000T01

- The immobilizer system is essentially carried over from that of the current TRIBUTE (BU/CU/YU) model's passive anti-theft system (PATS). However, some items have been changed and/or added to improve security. Refer to the following table.

Comparison with current TRIBUTE (BU/CU/YU) model

Item	Comparison
Key (transponder)	Same as the current TRIBUTE (BU/CU/YU) model
Coil	
On-board diagnostic function	• DTC B2431 is added. • Procedure is changed.
ID number input procedure	Procedure is changed.

STRUCTURAL VIEW

A6E812267000T02

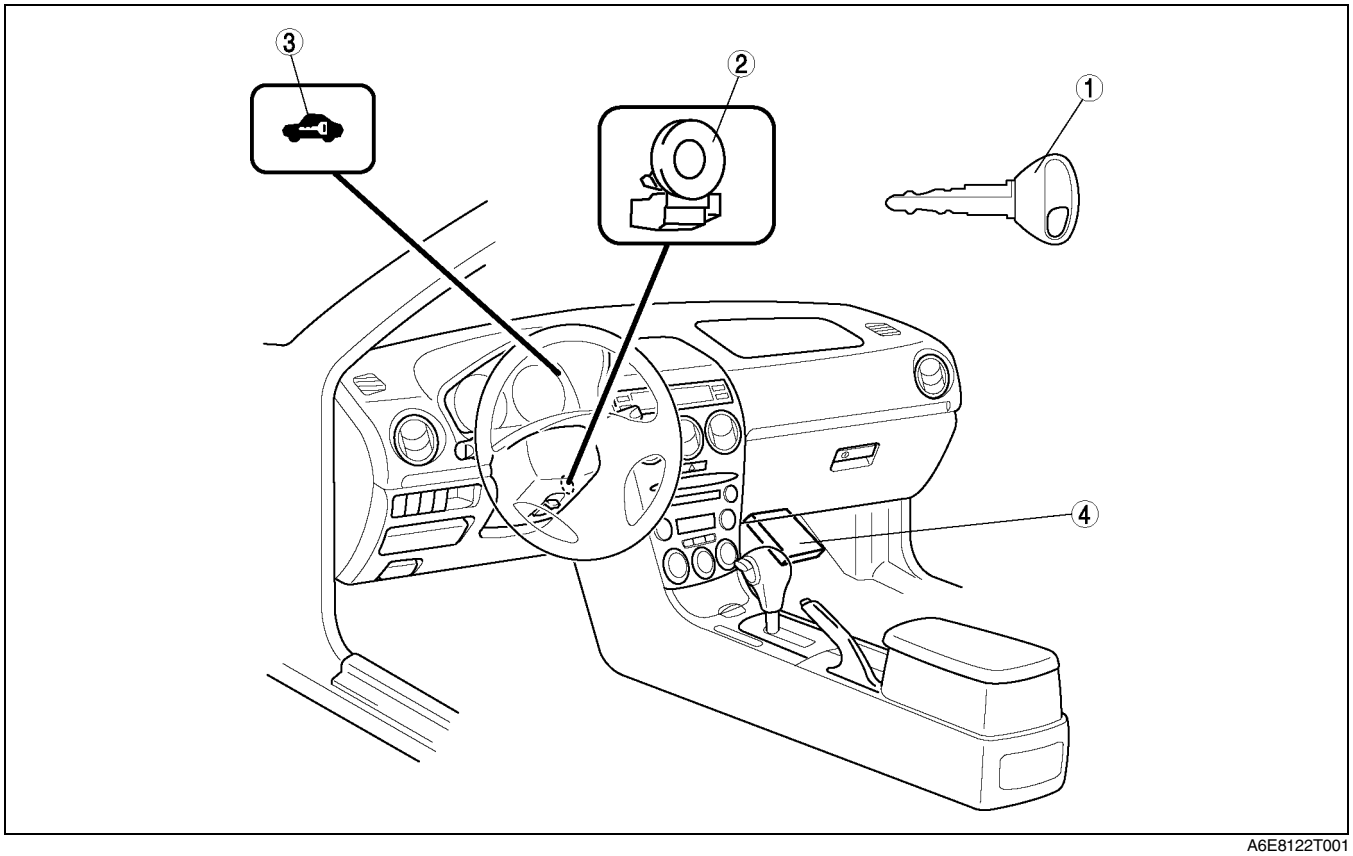

A6E8122T001

1	Key (transponder)	3	Security light
2	Coil	4	PCM

SYSTEM WIRING DIAGRAM

A6E812267000T03

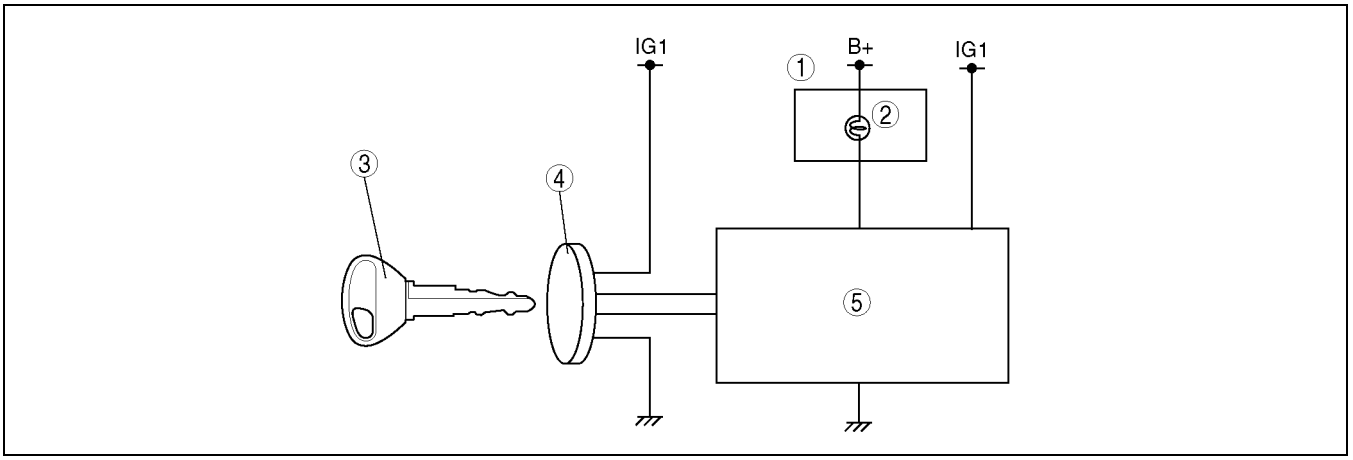

A6E8122T002

1	Instrument cluster
2	Security light
3	Key (transponder)
4	Coil
5	PCM

AUDIO AND NAVIGATION SYSTEM

OUTLINE (AUDIO SYSTEM)

A6E812401066T01

- The center panel module installed with the audio unit and climate control unit (automatic A/C only), and the audio switch, A/C switch, hazard warning switch and rear window defroster switch built into the center panel has been adopted.
- The audio unit consists of the following parts:
  - — Base unit, which has AM/FM tuner and control function for each module
  - — Upper module (CD player or CD changer)
  - — Lower module (cassette deck or MD player)
  - — Cover
- Upper module (CD player or CD changer) and lower module (cassette deck or MD player) are options.
- Module availability depends on vehicle grade.
- The operation of audio unit is the same as that of current XEDOS 9, MILLENIA (TA) models.
- The audio control switch is equipped on the steering wheel for audio operation.
- The following two types of antennas have been adopted.
  - — Center roof antenna (European (L.H.D. U.K.) specs. and GCC specs. (5HB)): The construction of center roof antenna is the same as that of current 323 (BJ) model.
  - — Glass antenna (GCC specs. (4SD))
- Four speakers installed as standard, one each to the front and rear doors, have been adopted. For BOSE specified speakers, 7 speakers, including the door speakers, are installed on the inner garnish of the front doors (tweeters), and in the rear package (4SD) or temporary spare tire (5HB) (woofer).
- A noise filter has been installed on the brake light and rear window defroster circuit (GCC specs.), and a condenser has been installed on the high-mount brake light and rear wiper motor circuit for improved noise reduction.
- All information related to the audio system appears on the information display's LCD.

T

STRUCTURAL VIEW (AUDIO SYSTEM)

A6E812401066T02

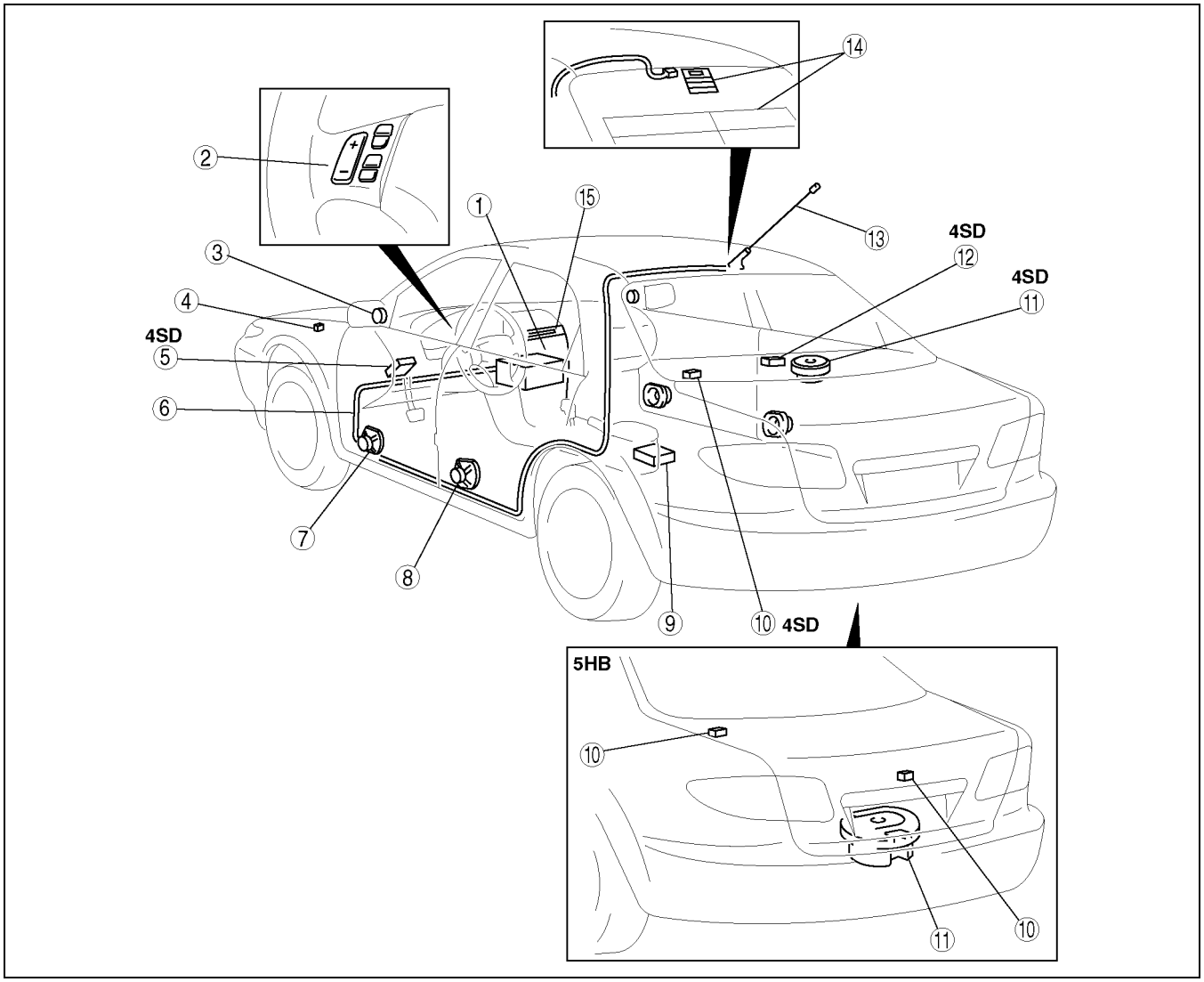

A6E8124T013

1	Center panel module (built-in audio unit)
2	Audio control switch
3	Tweeter (BOSE)
4	Woofer relay (BOSE)
5	Noise filter (brake switch)
6	Antenna feeder
7	Front door speaker
8	Rear door speaker

9	Audio amplifier (BOSE)
10	Condenser
11	Woofer (BOSE)
12	Noise filter (rear window defroster)
13	Center roof antenna
14	Glass antenna
15	Information display

BLOCK DIAGRAM (AUDIO SYSTEM)

A6E812401066T03

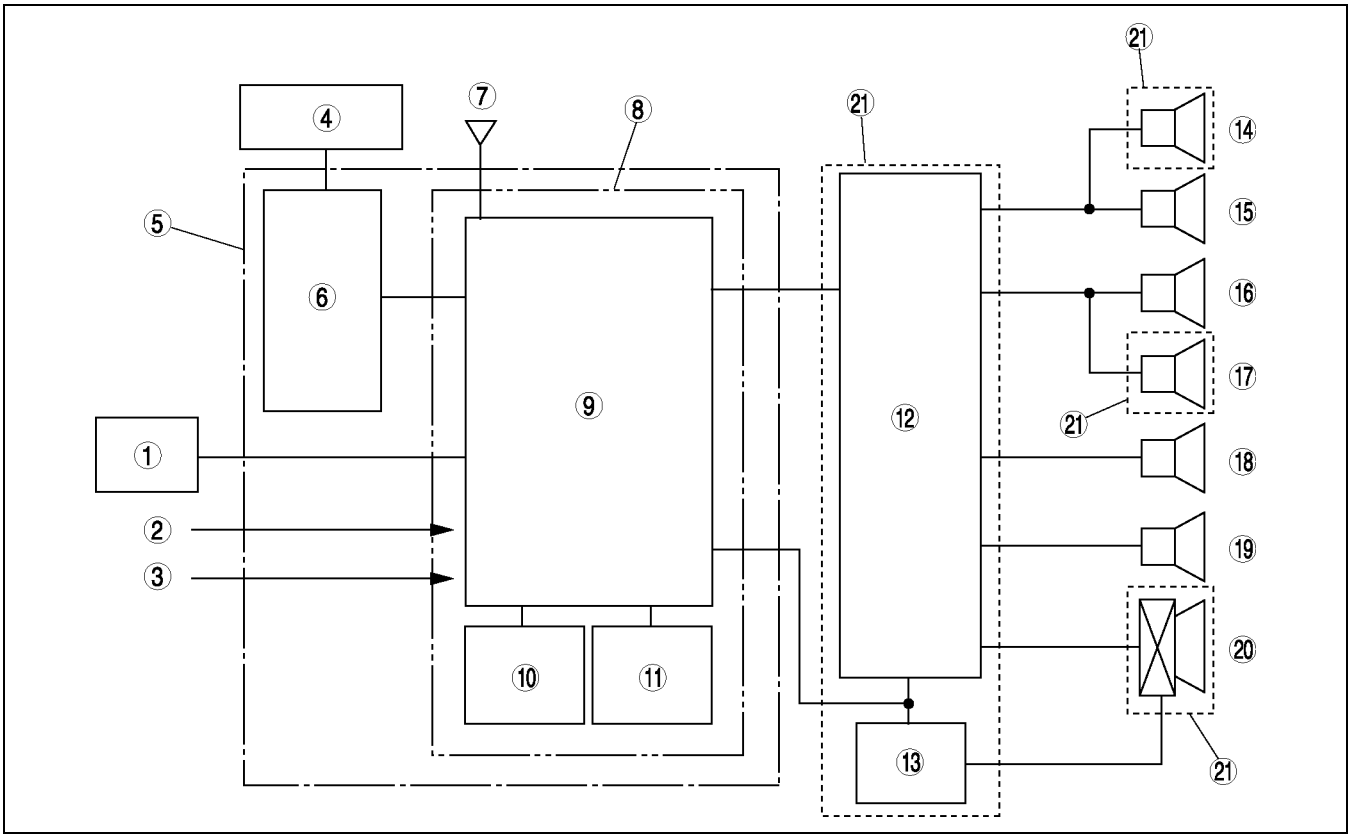

A6E8124T019

1	Audio control switch
2	TNS signal
3	Vehicle speed signal
4	Information display
5	Center panel module (built-in audio unit)
6	Audio control circuit
7	Antenna
8	Audio unit
9	Base unit
10	Upper module
11	Lower module

12	Audio amplifier
13	Woofer relay
14	Tweeter (left)
15	Front door speaker (left)
16	Front door speaker (right)
17	Tweeter (right)
18	rear door speaker (left)
19	rear door speaker (right)
20	Woofer
21	BOSE system only

T

SPECIFICATIONS (AUDIO SYSTEM)

A6E812401066T04

Audio Unit

Item				Specification			
				BOSE	Standard		
				Type A	Type B	Type C	Type D
Rated voltage			(V)	12			
Frequency band	AM	LW	(kHz)	153—279		—	
		MW	(kHz)	531—1602		522—1629	530—1620
	FM		(MHz)	87.5—108.0			
Information system				RDS	—		
Audio amplifier maximum output power			(W)	25×4 (External type audio amplifier)	25×4		
Output impedance			(ohm)	2	4		

Speaker

Item		Specification					
		Door speaker			Tweeter	Woofer	
		Standard	BOSE				
			Front	Rear		4SD	5HB
Maximum input	(W)	25				100	
Impedance	(ohm)	4	2		3.2	0.5	
Size	(in)	5.5×7.5	6.5	5.25	2	9	5.25

CENTER PANEL MODULE

A6E812466900T01

Outline

- The center panel module is composed of the installed audio unit and climate control unit (automatic A/C only) with the audio switch, A/C switch, hazard warning switch, and rear window defroster switch built into the center panel.
- The passenger-side air bag cut-off indicator light is installed on the lower part of the center panel. (with passenger-side air bag cut-off system)

Structural View

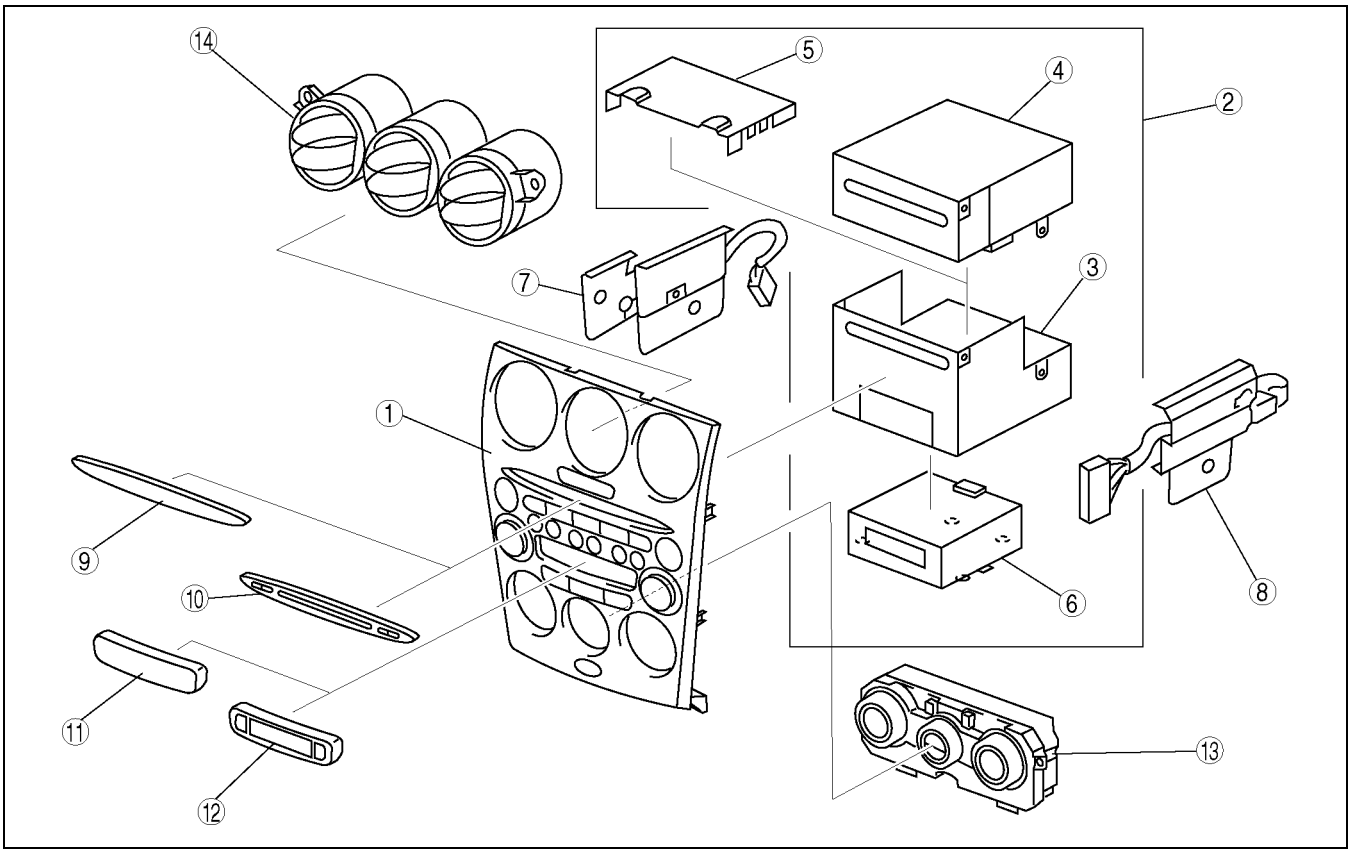

A6E8124T014

1	Center panel
2	Audio unit
3	Base unit
4	Upper module
5	Cover (without upper module)
6	Lower module
7	Circuit board (manual A/C only)

8	Information display harness
9	Cover (without upper module)
10	Cover (with upper module)
11	Cover (without lower module)
12	Cover (with lower module)
13	Climate control unit (auto A/C only)
14	Ventilator grille

T

Terminal Layout and Signal
Audio unit

Terminal		Signal
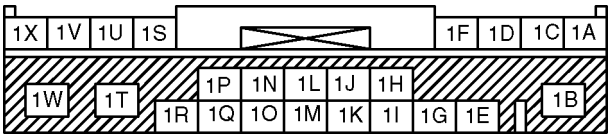	1A	Left front speaker (+)
	1B	B+ (Power back up)
	1C	Left front speaker (–)
	1D	Right front speaker (+)
	1E	Illumination (+)
	1F	Right front speaker (–)
	1G	Illumination (–)
	1H	—
	1I	Vehicle speed signal
	1J	AMP. control
	1K	UART-1
	1L	TEL. mute
	1M	UART-2
	1N	Steering switch
	1O	CAN (+)
	1P	Steering switch
	1Q	CAN (–)
	1R	ACC
	1S	Left rear speaker (+)
	1T	Ground
	1U	Left rear speaker (–)
	1V	Right rear speaker (+)
	1W	Ground (power)
	1X	Right rear speaker (–)
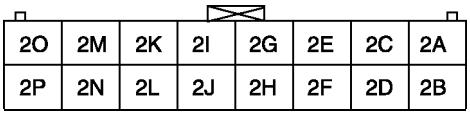	2A	Ground (power)
	2B	System mute
	2C	Right input (+)
	2D	Right input (–)
	2E	Left input (+)
	2F	Left input (–)
	2G	Signal ground
	2H	AUX control
	2I	AUX control
	2J	—
	2K	Bus (–)
	2L	Bus (+)
	2M	—
	2N	—
	2O	ACC
	2P	B+

Information display harness

Terminal		Signal
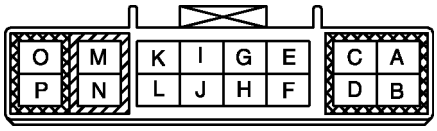	A	ACC
	B	LCD DRV+
	C	LCD PL+
	D	LCD
	E	Switch check
	F	LCD DATA
	G	LCD AC
	H	LCD RS
	I	LCD CS
	J	LCD CLK
	K	LCD RST
	L	Illumination (+)
	M	Digital ground
	N	Digital ground
	O	Power ground
	P	Power ground

Circuit board (manual A/C only)

Terminal		Signal
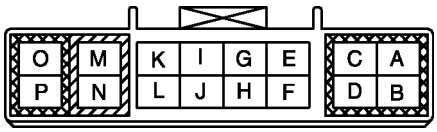	A	Ground
	B	IG2
	C	Hazard warning ground
	D	Hazard warning switch
	E	Evaporator temperature sensor
	F	A/C ambient temperature sensor
	G	—
	H	Sensor ground
	I	—
	J	Rear window defroster switch
	K	Fan switch
	L	A/C
	M	Air intake actuator drive (FRESHÆRECIRCULATE)
	N	Air intake actuator drive (RECIRCULATE→FRESH)
	O	Rear window defroster relay
	P	—

T

Climate control unit (auto A/C only)

Terminal		Signal
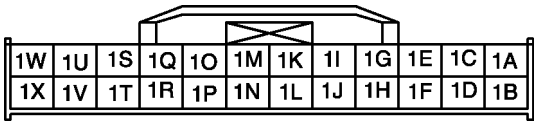	1A	Blower motor feedback
	1B	+5 V
	1C	Blower motor control
	1D	—
	1E	Rear window defroster relay
	1F	On-board diagnostic
	1G	Wiper deicer relay
	1H	—
	1I	Sensor ground
	1J	HNTI
	1K	A/C ambient temperature sensor
	1L	HNTI
	1M	Cabin temperature sensor
	1N	—
	1O	Water temperature sensor
	1P	A/C
	1Q	Evaporator temperature sensor
	1R	—
	1S	Solar radiation sensor
	1T	Hazard warning ground
	1U	Potentiometer (air mix actuator)
	1V	—
	1W	Potentiometer (airflow mode actuator)
	1X	Hazard warning switch
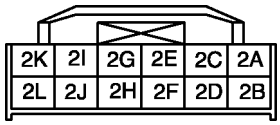	2A	Panel light control
	2B	TNS
	2C	Air mix actuator drive (HOT→COLD)
	2D	Air mix actuator drive (COLD→HOT)
	2E	Airflow mode actuator drive (VENT→DEFROSTER)
	2F	B+ (Power back up)
	2G	Airflow mode actuator drive (DEFROSTER→VENT)
	2H	IG2
	2I	Air intake actuator drive (FRESH→RECIRCULATE)
	2J	—
	2K	Air intake actuator drive (RECIRCULATE→FRESH)
	2L	Ground

Switch/Button/Indicator light Location

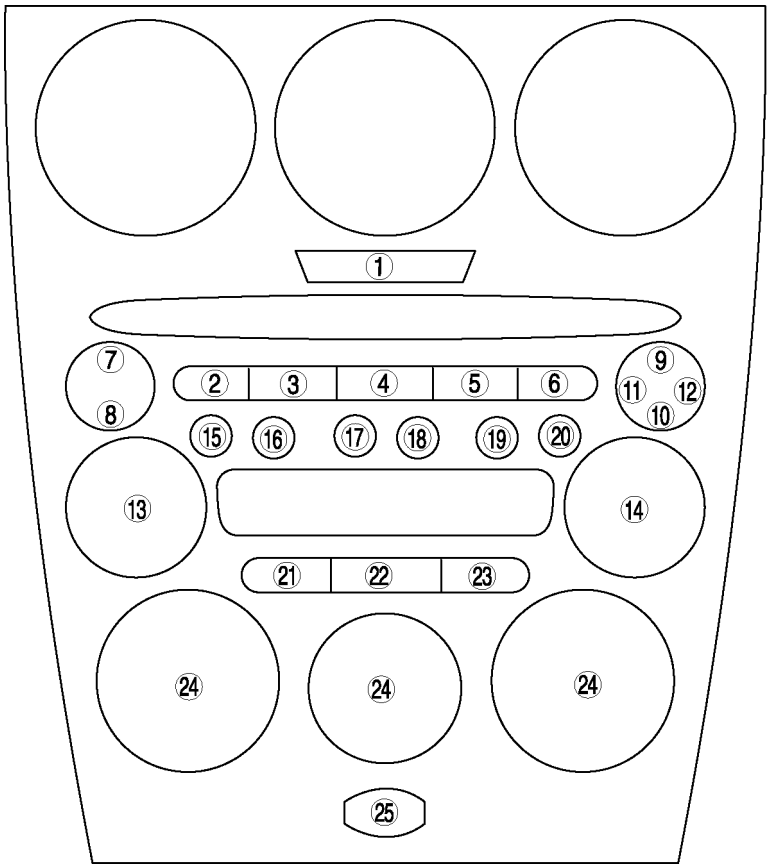

A6E8124T002

No.	Switch/button/light	Related system
1	Hazard warning switch	Hazard warning system
2	FM1 button	Audio system
3	FM2 button	Audio system
4	AM button	Audio system
5	CD button	Audio system
6	TAPE/MD button	Audio system
7	SEEK button (upper) (type A)	Audio system
	SCAN button (type B)	Audio system
8	SEEK button (lower) (type A)	Audio system
	AUTO-M button (type B)	Audio system
9	TA button (type A)	Audio system
	SEEK button (upper) (type B)	Audio system
10	AUTO-M button (type A)	Audio system
	SEEK button (lower) (type B)	Audio system
11	AF button (type A)	Audio system
12	PYT button (type A)	Audio system
13	POWER button (type A)	Audio system
	AUDIO CONT button (type B)	Audio system
14	AUDIO CONT button (type A)	Audio system
	POWER button (type B)	Audio system

No.	Switch/button/light	Related system
15	Preset button “1”	Audio system
16	Preset button “2”	Audio system
17	Preset button “3”	Audio system
18	Preset button “4”	Audio system
19	Preset button “5”	Audio system
20	Preset button “6”	Audio system
21	Rear window defroster switch (auto A/C)	Rear window defroster system
	A/C switch (manual A/C)	Air conditioner system
22	REC/FRESH switch	Air conditioner system
23	A/C switch (auto A/C)	Air conditioner system
	Rear window defroster switch (manual A/C)	Rear window defroster system
24	Climate control unit (See U–13 CLIMATE CONTROL UNIT)	Air conditioner system
25	Passenger-side air bag cut-off indicator light	Air bag system

T

AUDIO UNIT

A6E812466900T02

Outline

- The audio unit is composed of the base unit, upper module, and lower module.
- Upper and lower module availability depends on vehicle grade.
- The construction and operation of upper module and lower module are the same as that of current XEDOS 9, MILLENIA (TA) models.

Structural View

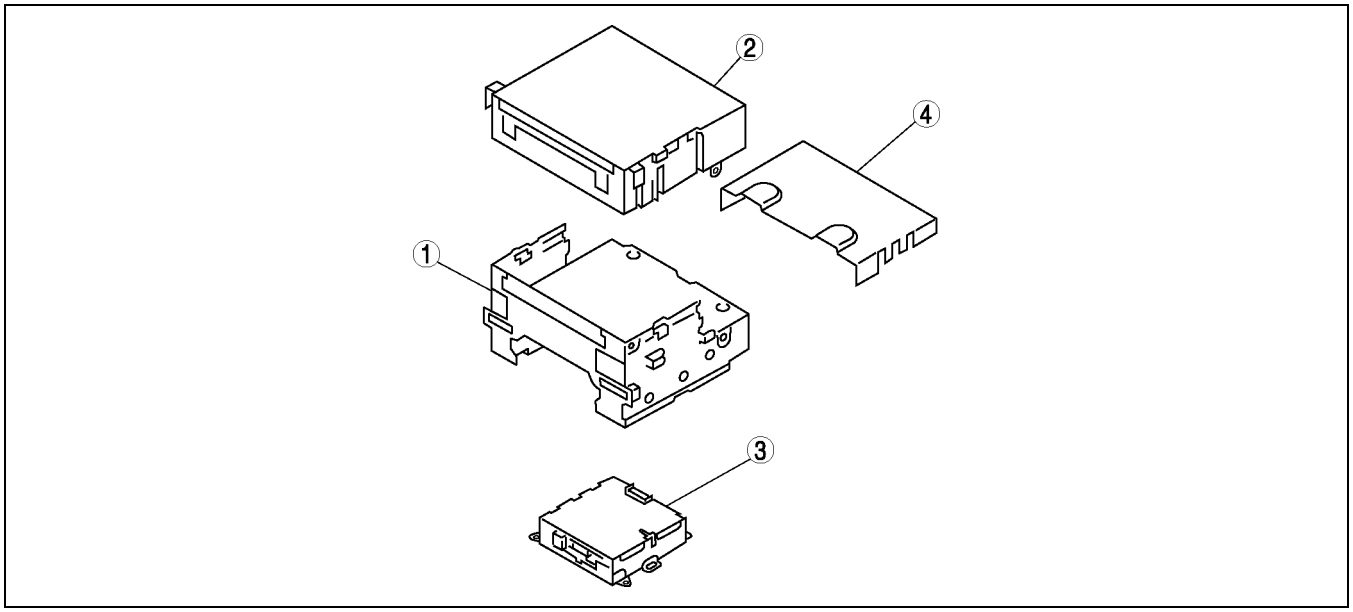

A6E8124T001

1	Base unit	3	Lower module (cassette deck or MD player)
2	Upper module (CD player or CD changer)	4	Cover (without upper module)

Terminal Layout and Signal

- (See T–53 CENTER PANEL MODULE.)

BASE UNIT

A6E812466900T03

Outline

- The base unit controls the AM/FM tuner, upper/lower modules, and externally extended unit (e.g. CD changer).
- An auto level control (ALC) function that controls speaker volume according to vehicle speed has been adopted.
- For drive information system (DIS) equipped vehicles, a CAN communication control circuit is included in the base unit. The base unit receives, using the CAN system, the DIS display signal from the instrument cluster, and converts it to a signal sent to the information display. (See T–40 DRIVE INFORMATION SYSTEM)

Structural View

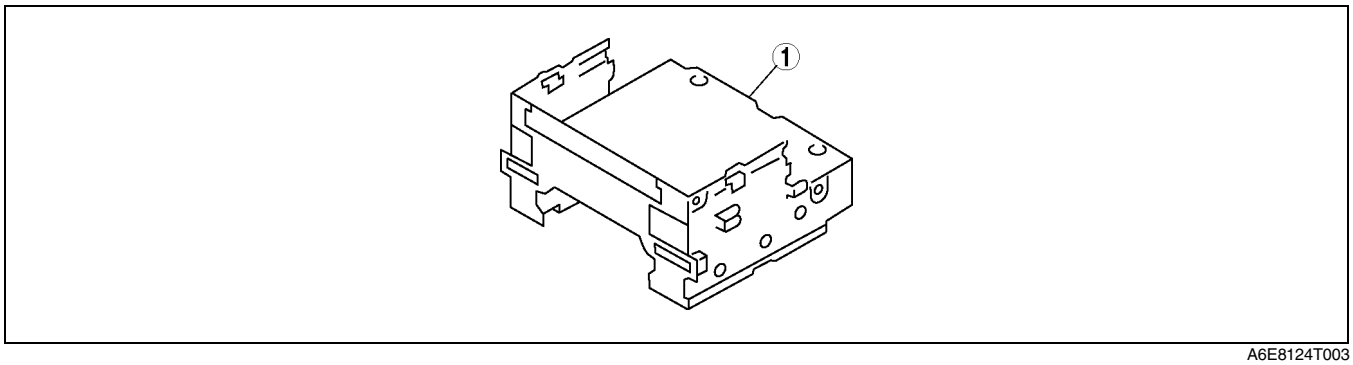

A6E8124T003

1	Base unit

AUTO LEVEL CONTROL (ALC) FUNCTION

A6E812466900T04

Function

- Adjusts the audio volume so that the sound is balanced against wind and road noise while driving.

Operation

- The audio unit changes the volume automatically based on the vehicle speed signal sent from the instrument cluster.

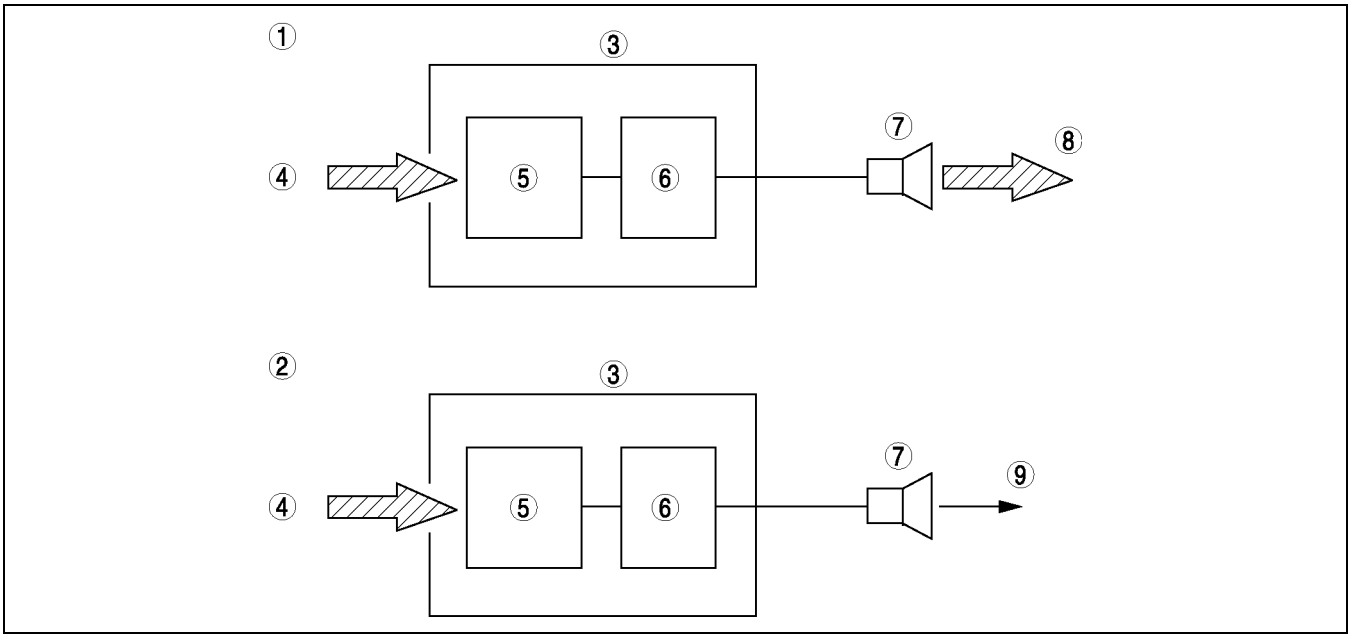

A6E8124T021

1	Higher vehicle speed
2	Lower vehicle speed
3	Audio unit (base unit)
4	Vehicle speed signal
5	ALC circuit

6	Power amplifier
7	Speaker
8	Higher volume
9	Normal volume

T

- The ALC function is divided into four modes, and can be used effectively to match the driving conditions.

Mode	Condition
ALC OFF	ALC function cancel
ALC LEVEL1	Outside road noise low
ALC LEVEL2	Outside road noise rather high
ALC LEVEL3	Outside road noise high

ON-BOARD DIAGNOSTIC SYSTEM (AUDIO SYSTEM)

A6E812466900T05

Outline

- The on-board diagnostic system has a self-diagnostic function and diagnostic assist function to help technicians locate malfunctions.

Self-diagnostic Function

Malfunction detection function

- The malfunction detection section detects malfunctions occurring in the system.

Memory function

- The memory function detects a malfunction, changes it to a DTC, and stores it in the memory. The memory can store a maximum of three DTCs. If another malfunction is detected when three DTCs are already stored, the memory function clears the oldest DTC and stores the new one.
- Once a DTC is stored, it can only be cleared by the designated procedure; not by turning the ignition switch to the LOCK position or disconnecting the negative battery cable. The procedure is mentioned in the Service Section.

Display function

- When the self-diagnostic function is activated, the information display displays the DTC stored in the memory.
- The DTC consists of the following codes and numbers:
  - — Part number (indicates malfunctioning part)
  - — Error code (indicates malfunction description)
  - — Manufacture code (indicates manufacturer)
- Refer to the Service Section for the display method.

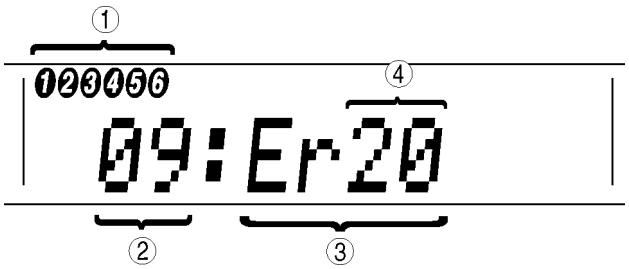

A6E8124T008

1	Supplier code
2	Part number

3	DTC
4	Error code

Supplier code	Supplier name
1	FMS Audio
2	Panasonic
3	Clarion

Parts number	Parts name
00	Cassette deck (lower module)
03	CD player (upper module)
05	CD changer (external type)
06	CD changer (upper module)
07	MD player (lower module)
09	Base unit

Error code	Malfunction description
01	Internal mechanism error
02	Servo mechanism error
03	Mechanism stuck
07	Disc reading error
10	BUS line (communication line) error
20	Insufficient power supply
22	Tuner error

Screen display		Malfunction location
DTC	Output signal	
09:Er22	—	Base unit (peripheral circuit)
09:Er20	—	Power supply circuit of base unit
00:Er10	—	Cassette deck—base unit communication line
03:Er10	—	CD player—base unit communication line
05:Er10	—	CD changer (external type)—base unit communication line
06:Er10	—	CD changer (upper module)—base unit communication line
07:Er10	—	MD player—base unit communication line
03:Er01	—	CD player
03:Er02	CHECK*1 CD*2	CD player
03:Er07	CHECK*1 CD*2	CD player
00:Er01	—	Cassette deck
00:Er03	—	Cassette deck
00:Er04	CHECK*1 TAPE*2	Cassette tape
05:Er01	—	CD changer (external type)
05:Er07	CHECK*1 CD*2	CD changer (external type)
06:Er01	—	CD changer (upper module)
06:Er02	CHECK*1 CD*2	CD changer (upper module)
06:Er07	CHECK*1 CD*2	CD changer (upper module)
07:Er01	—	MD player
07:Er02	CHECK*1 MD*2	MD player
07:Er07	CHECK*1 MD*2	MD player
NO Err	—	No stored DTCs

*1,*2:When an error occurs, the error messages are displayed three times in the order of *1 and *2, respectively.

T

Diagnostic Assist Function

- The diagnostic assist function displays the operating condition of the following functions (components) and forces them to operate in order to examine whether they are malfunctioning or not.
- For the start procedure of each mode, refer to the Service Section.

LCD

- The diagnostic assist function illuminates all characters in the LCD to check for truncated or faint characters.

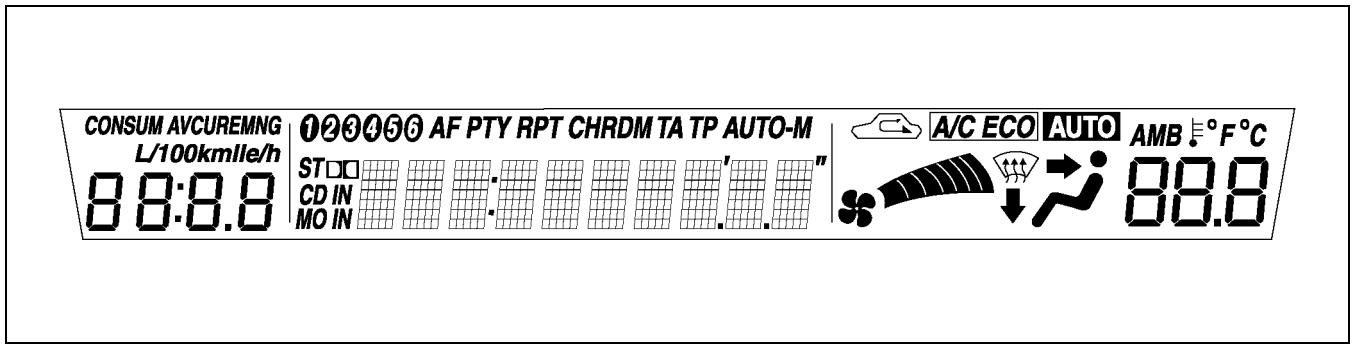

A6E8124T009

Switch

- The diagnostic assist function sounds the buzzer when the switches are pressed to check the switches.

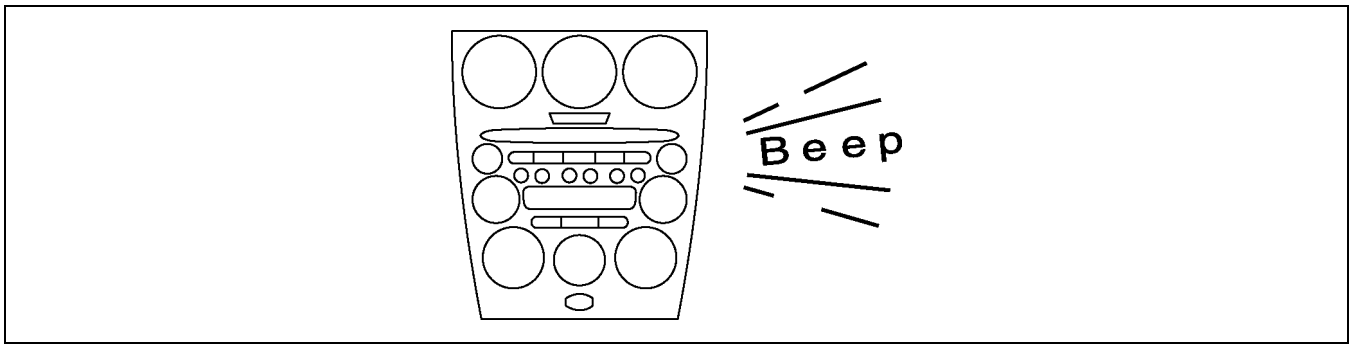

A6E8124T010

Speaker

- The diagnostic assist function outputs sound to the speakers in the following order to determine condition of the speakers and wiring harness between the base unit and each speaker.
  1. Left door speaker and tweeter
  2. Right door speaker and tweeter
  3. Right rear door speaker and woofer
  4. Left rear door speaker and woofer

Radio

- The diagnostic assist function displays the radio reception condition to determine condition of the antenna, antenna feeders, and base unit (tuner).

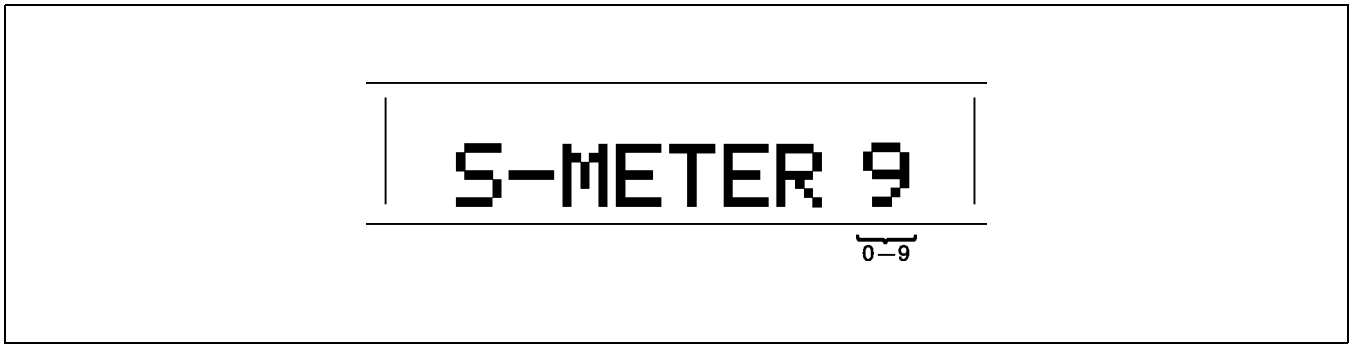

A6E8124T011

Audio amplifier (external)

- The diagnostic assist function displays the output state of the audio amplifier operating signal to determine condition of the audio amplifier, base unit, and wiring harness between the base unit and audio amplifier.

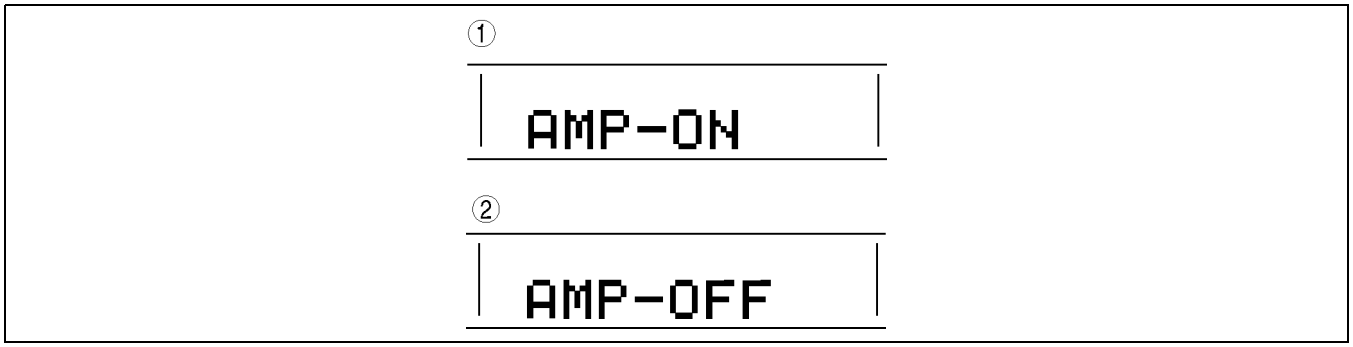

A6E8124T012

1	Audio amplifier operating signal is output
2	Audio amplifier operating signal is not output

OUTLINE (CAR-NAVIGATION SYSTEM)

A6E812466000T01

- A 7 inch wide, pop-up LCD (*TFT) has been adopted to improve marketability.
- A hybrid incar-navigation system and map-matching function has been adopted to improve accuracy of detection of the vehicle's position.
- A remote control with an infrared transmitter has been adopted to improve operational ability.
- The languages and voices available for use with the car-navigation unit include English, French, German, Dutch, Spanish, and Italian. However, the language used in this manual is in **English only**.
- The following parts and position detecting functions are the same as those of the XEDOS 9/MILLENIA (TA) model. (See XEDOS 9/Mazda MILLENIA Workshop Manual Supplement 1694-1*-00H.)
  - — GPS antenna
  - — Gyro sensor
  - — Autonomous navigation function
  - — GPS navigation function
  - — Map matching function

*TFT: Thin Film Transistor

STRUCTURAL VIEW (CAR-NAVIGATION SYSTEM)

A6E812466000T02

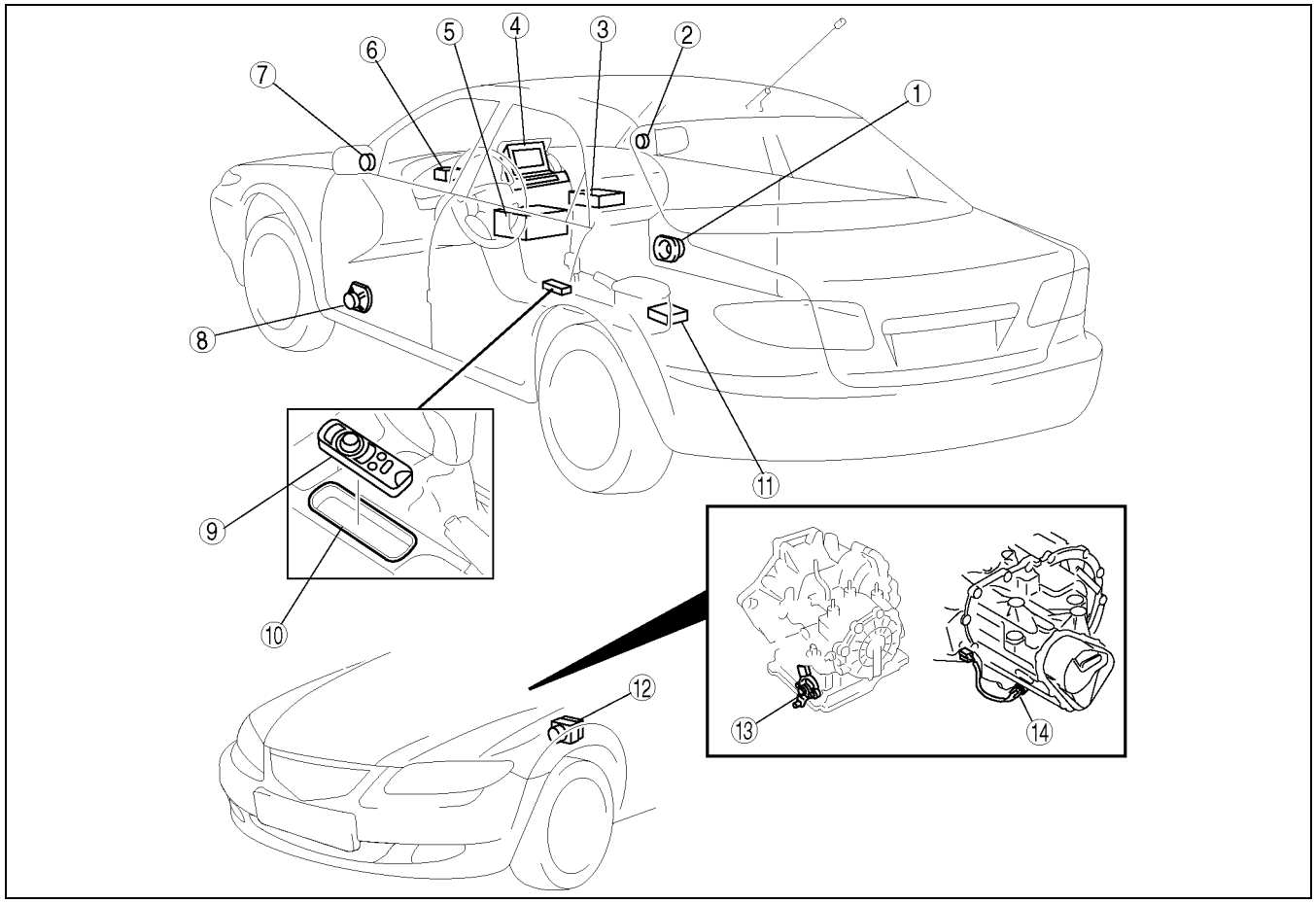

A6E8126T050

1	Front door speaker (right)
2	Tweeter (right) (BOSE)
3	Car-navigation unit
4	LCD unit
5	Audio unit
6	GPS antenna
7	Tweeter (left) (BOSE)

8	Front door speaker (left)
9	Remote control
10	Cradle
11	Audio amplifier (BOSE)
12	DSC HU/CM (with DSC) or ABS/TCS HU/CM (with ABS/TCS)
13	TR switch (ATX)
14	Back-up light switch (MTX)

BLOCK DIAGRAM (CAR-NAVIGATION SYSTEM)

A6E812466000T03

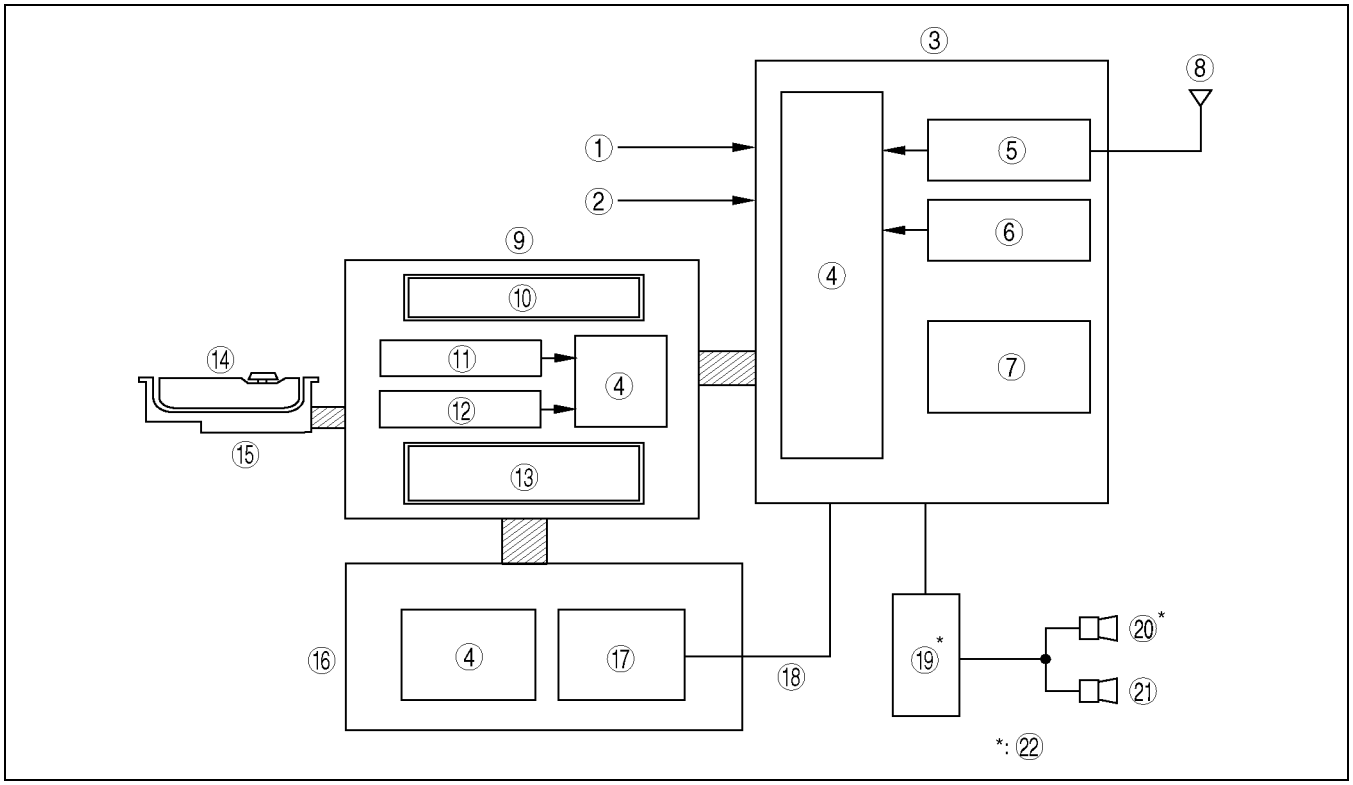

A6E8126T051

1	DSC HU/CM (with DSC) or ABS/TCS HU/CM (with ABS/TCS) (vehicle speed signal)
2	TR switch (ATX) or back-up light switch (MTX) (R-range signal)
3	Car-navigation unit
4	CPU
5	GPS receiver
6	Gyro sensor
7	DVD driver
8	GPS antenna
9	LCD unit
10	LCD

11	TILT switch
12	OPEN/CLOSE switch
13	Information display
14	Remote control
15	Cradle
16	Audio unit
17	Power amplifier
18	Driver side only
19	Audio amplifier
20	Tweeter (driver side)
21	Front door speaker (driver side)
22	BOSE system only

SPECIFICATIONS (CAR-NAVIGATION SYSTEM)

A6E812466000T04

Car-navigation Unit

Item		Specification
Unit type		Stand alone
Rated voltage	(V)	12
ROM type		DVD-ROM
Output impedance	(ohm)	Standard: 4, BOSE: 4.7
Voice guidance output power	(W)	5

LCD Unit

Item			Specification
Unit type			Pop-up
Rated voltage		(V)	12
Display (for car-navigation system)	Size	(inch)	7 (wide)
	Type		TFT (Thin Film Transistor); Full-color
Display (for audio, DIS and A/C)	Type		LCD; Amber-color

Speaker

- Refer to audio system. (See T–52 SPECIFICATIONS (AUDIO SYSTEM).)

COMPONENT PART AND FUNCTIONS

A6E812466000T05

Item	Function
Car-navigation unit	• Reads the data (map,voice and other) from the DVD-ROM. • Calculates and displays the vehicle's position from various signals. • Calculates the route to the destination. • Navigates the driver to the destination using the map screen and/or the voice. **Note** • DVD audio and video are not supported by this system. • This unit does not support all Video CD and CD formats.
LCD unit	• Displays the screen (menus, maps and other screens) by remote control operation. • Displays the status of audio, DIS and A/C by button operation on the information display.
GPS antenna	• Receives GPS signal from satellites.
Gyro sensor (inside of the car-navigation unit)	• Sends yaw-rate signal to the CPU in the car-navigation unit.
TR switch (ATX) or back-up light switch (MTX)	• Sends R-range or reverse signal to the car-navigation unit.
DSC unit (with DSC) or ABS/TCS HU/CM (with ABS/TCS)	• Sends vehicle speed signal to the car-navigation unit by CAN system.
Front speaker and tweeter (driver side)	• Outputs voice and audio sound.
DVD-ROM (inside of the car-navigation unit)	• Map information data of each country is recorded. • Voice data used to guide the route is recorded. • Route information data to search for the route is recorded.
Remote control	• Changes display screens, settings etc., by button operation.
Cradle	• Provides power source (B+, TNS) for remote control. • Sends remote control signal to the car-navigation unit.

CAR-NAVIGATION UNIT

A6E812466902T01

Outline

- Using exterior signal input and DVD-ROM information, this unit detects vehicle position, provides destination route guidance, and displays color maps.

Structure

- The car-navigation unit is located in the glove compartment.
- An Eject button, to eject the DVD-ROM from the loading slot, is included in the unit.
- A gyro sensor which detects vehicle cornering angle is built into the unit.

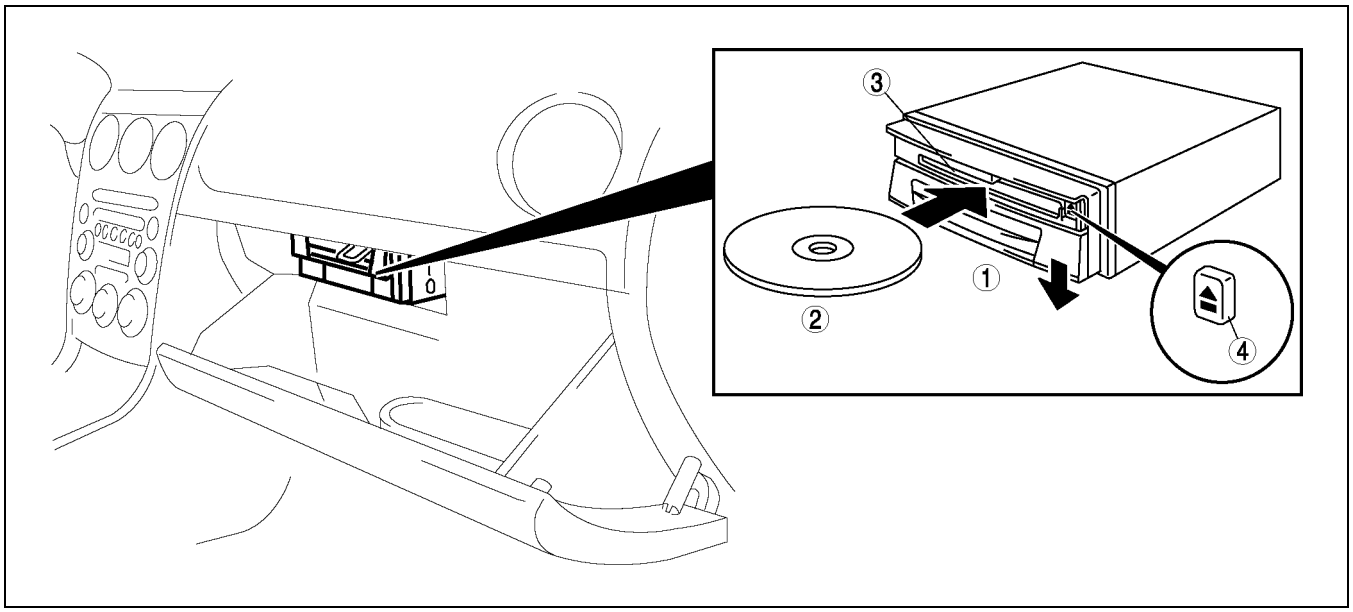

A6E8126T052

1	Car-navigation unit
2	DVD-ROM

3	DVD-ROM loading slot
4	[EJECT] button

Terminal Layout and Signals

Terminal		Signals 16-pin connector
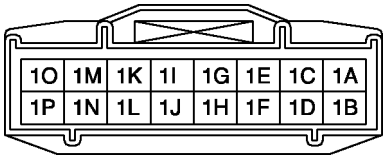	1A	GND
	1B	B+
	1C	–
	1D	ACC
	1E	PR front speaker input (-)
	1F	Illumination (-)
	1G	PR front speaker input (+)
	1H	Vehicle speed
	1I	PR front speaker output (-)
	1J	Parking brake switch
	1K	PR front speaker output (+)
	1L	R-range
	1M	Front speaker output (-)
	1N	Front speaker output (+)
	1O	Front speaker input (-)
	1P	Front speaker input (+)

Terminal		Signals
		24-pin connector
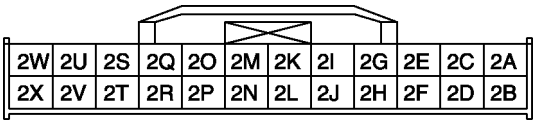	2A	–
	2B	–
	2C	–
	2D	–
	2E	–
	2F	–
	2G	–
	2H	–
	2I	–
	2J	–
	2K	–
	2L	–
	2M	–
	2N	Monitor serial input
	2O	Shield GND
	2P	Monitor serial output
	2Q	Shield GND
	2R	Video (composite sync)
	2S	–
	2T	Video (B)
	2U	Video GND
	2V	Video (G)
	2W	–
	2X	Video (R)

Terminal		Signals
		8-pin connector (for extended function)
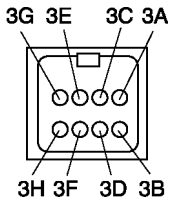	3A	–
	3B	Serial output
	3C	–
	3D	Serial input
	3E	Power
	3F	Reset
	3G	B+
	3H	GND

Terminal		Signal
		1-pin connector
	4A	GPS antenna input

T

LCD UNIT

A6E812466902T02

Outline

- The car-navigation system LCD and the information display are incorporated into one unit. Based on signals from the car-navigation unit and remote control, the LCD displays navigational information. Based on signals from a specialized systems (audio, DIS and A/C) module, the LCD displays information about these systems
- The LCD unit senses the user operations from the remote control and sends a signal to the car-navigation unit.

Structure

- An LCD unit, located in the upper-center part of the dashboard to improve visibility, has been adopted.
- A pop-up LCD, controlled by an [OPEN/CLOSE] switch, has been adopted.
- The angle of the display screen can be adjusted in stages using the [TILT] switch.
- The audio, DIS and A/C information display is located on the lower portion of the unit. (See T–40 DRIVE INFORMATION SYSTEM.)

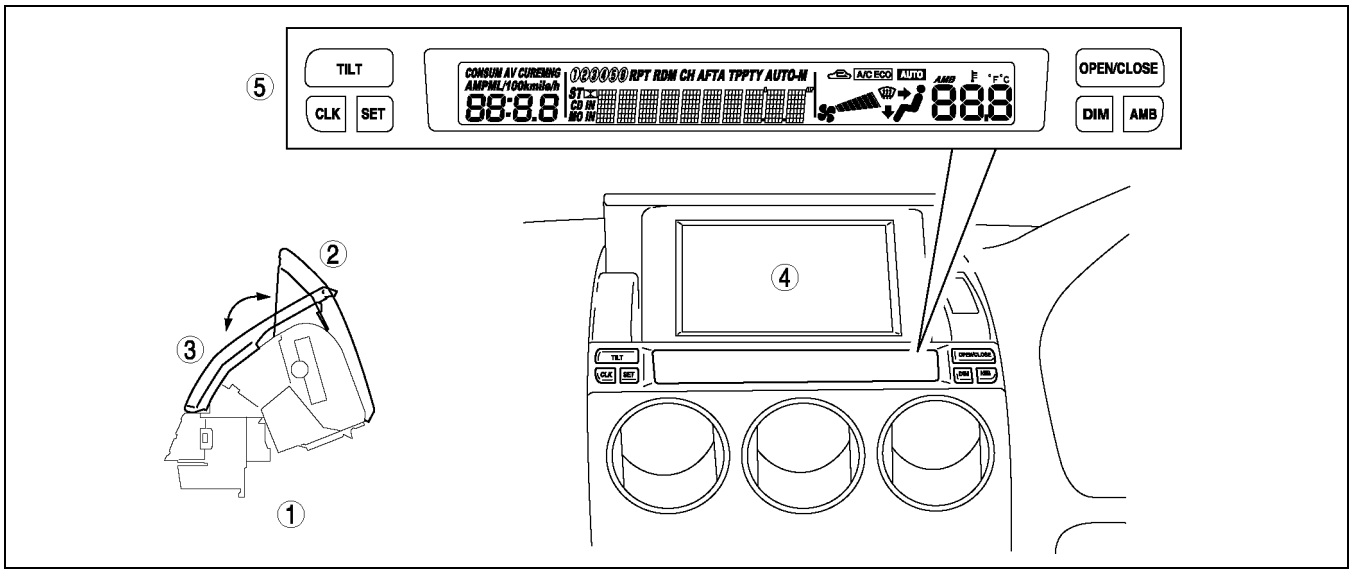

A6E8126T060

1	LCD unit
2	Open
3	Close

4	LCD for car-navigation system
5	Information display

Terminal Layout and Signals

Terminal		Signals
		24-pin connector
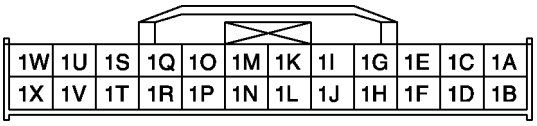	1A	Video (B)
	1B	Video (G)
	1C	Video (composite sync)
	1D	Video (R)
	1E	Video GND
	1F	–
	1G	Shield GND
	1H	–
	1I	Monitor serial output
	1J	–
	1K	Monitor serial input
	1L	–
	1M	Control illumination
	1N	–
	1O	ACC
	1P	GND
	1Q	B+
	1R	–
	1S	Shield GND
	1T	R-range
	1U	UART2
	1V	Illumination
	1W	UART1
	1X	–

Terminal		Signals
		6-pin connector
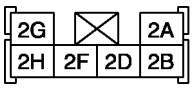	2A	Remote-data
	2B	Power
	2D	Shield GND
	2F	–
	2G	GND
	2H	Illumination

Terminal		Signal
		1-pin connector
	3A	GND

T

REMOTE CONTROL AND CRADLE

A6E812400174T01

Outline

- A remote control for the car-navigation system, with simplified design for easy operation, has been adopted.
- A cradle to hold the remote control has been adopted.

Structure

- The remote control and cradle are located on the console.
- The buttons and joystick for controlling car-navigation are located on the top side of the remote control. The infrared transmitter sends signals through a terminal on the front and back of the remote control.
- An infrared sensor that receives signals from the remote control is located on the cradle. The received signals are sent to the LCD unit.
- The remote control uses the batteries as a power source when not in the cradle and uses the power supply connector when set in the cradle. (Ignition switch at ACC or ON position)

Note

- The batteries are not charged when the remote control is in the cradle.

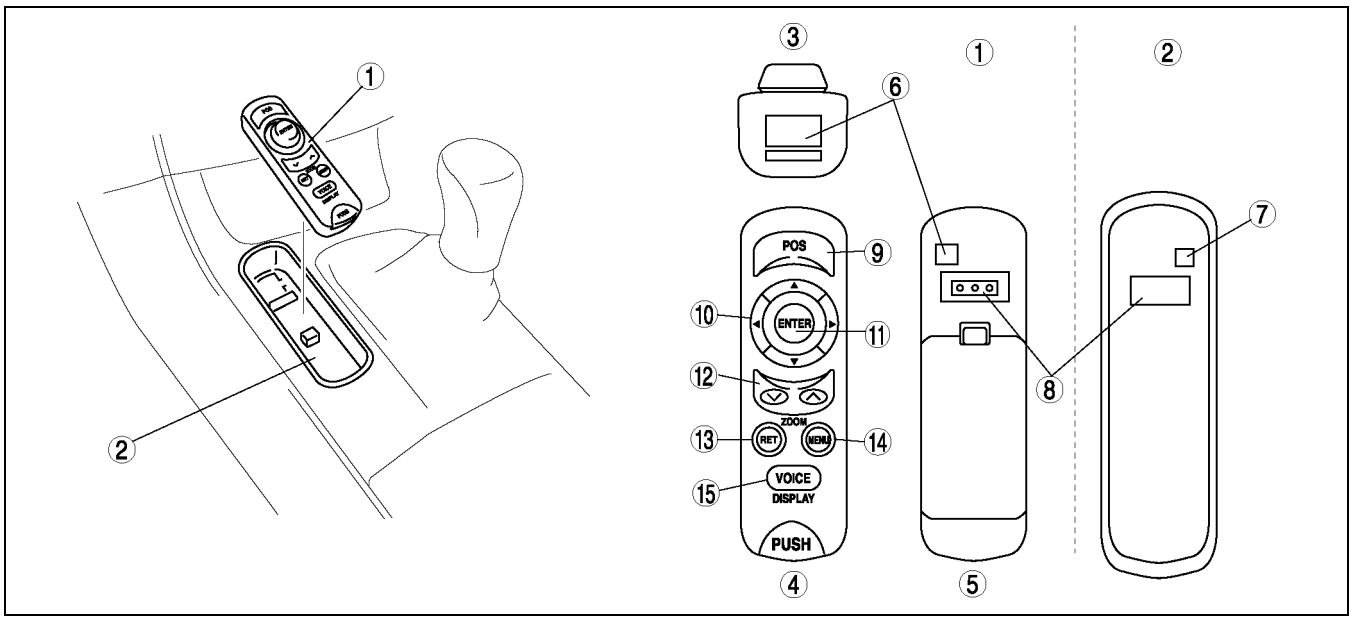

A6E8126T061

1	Remote control
2	Cradle
3	Front view
4	Top view

5	Underside view
6	Infrared transmitter
7	Infrared sensor
8	Power supply connector

No.	Button (component)	Function
9	[POS (Position)] button	Displays the current position.
10	Joystick	Selects items by tilting it up, down, right and left.
11	[ENTER] button	Executes a selected item.
12	[ZOOM] button	Changes the map scale.
13	[RET] button	Returns to the previous screen.
14	[MENU] button	Select a menu.
15	[VOICE] button	Initiates vocal guidance for route maneuvers.

NAVIGATION FUNCTION

A6E812466000T06

Outline

- A vehicle's position is measured by a hybrid method of autonomous navigation (using yaw-rate signals from the gyro sensor and vehicle speed signals from the DSC unit (with DSC) or ABS/TCS HU/CM (with ABS/TCS) and GPS navigation (using signals from GPS satellites). Accurate detection of the vehicle's position is possible based on the adoption of a map-matching function which specifies the vehicle's position as compared with the map data read from the DVD-ROM and the vehicle's position measured from autonomous navigation and GPS navigation.
- Guidance to destination is provided via display of the recommended route on the map screen, as well as voice messaging guidance at intersections and points of divergence.
- Based on inputted signals and information on the DVD-ROM, the following features are available:
  - Destination can be selected based on address, intersection, POI (Point of Interest), history, memory or map.
  - Route information is available in map and guide mode.
  - Voice guidance and menus are available in six languages.
  - A map screen that displays maps in twelve steps with scales from 100m to 500km.
  - A map screen that displays routes according to Shortest Route and Avoid Motorway functions.
  - A detour function which provides three routes to select from based on streets selected to avoid, up to five via points and calculation of set detour distance.
  - A wide variety of preferential settings are available.

Block Diagram

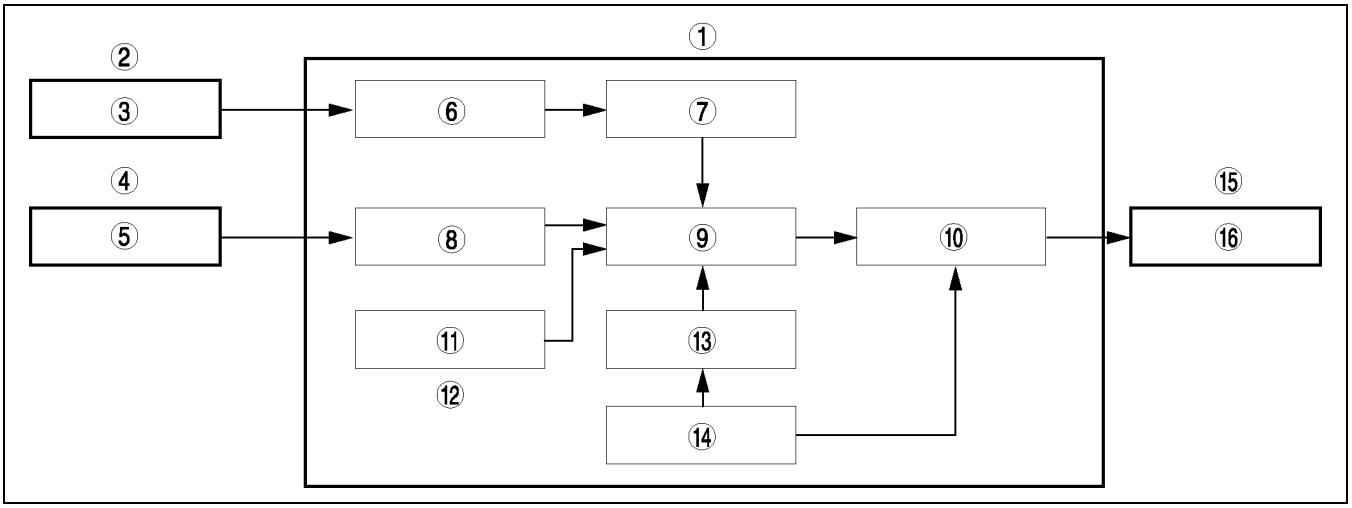

A6E8126T062

1	Car-navigation unit
2	GPS antenna
3	Signal from satellite
4	DSC unit (with DSC) or ABS/TCS HU/CM (with ABS/TCS)
5	Vehicle speed signal
6	Detection of current measured position
7	Correction by GPS
8	Detection of vehicle travel distance

9	Detection of vehicle's position
10	Map matching
11	Yaw-rate signal
12	Gyro sensor
13	Map data
14	DVD-ROM
15	LCD unit
16	Display

T

Map Screen Selection
Current position map

- The location of the vehicle and surrounding area are shown.
- By pressing the [POS] button, the display switches to guide mode. (Only while in route guidance.)

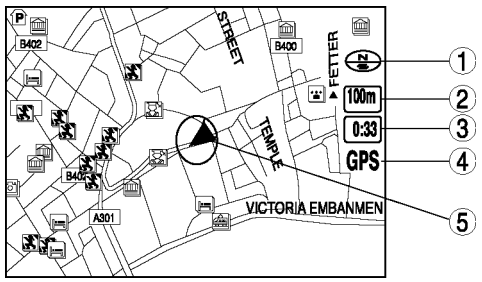

A6E8126T063

1	Map orientation
2	Map scale
3	Clock

4	GPS reception indicator • Lights up when receiving signals from 3 or more satellites.
5	Vehicle position

Scroll map mode

- The scroll map is displayed when operating the joystick on the current position map.
- This map can be scrolled with the crosshair cursor.
- By moving the crosshair cursor to a road and pressing [ENTER] button, the road name is displayed on the screen.

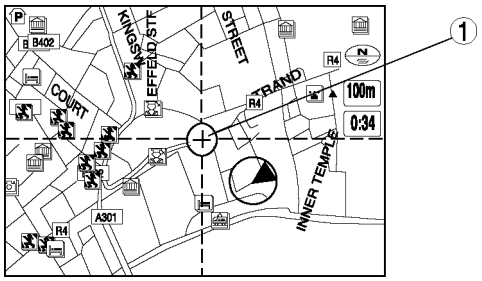

A6E8126T066

1	Crosshair cursor

Guide mode

- Displays an enlarged view of the road using an arrow to indicate destination, and also displays route and destination guidance information. (While in route guidance)
- By pressing the [POS] button, the display switches to the current position map.

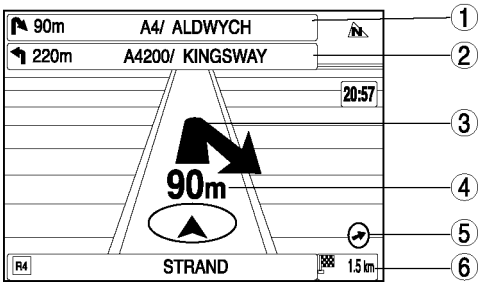

A6E8126T064

1	Distance to the next turn
2	Distance to the turn after the next turn
3	Arrow guidance for the next turn

4	Distance to the next turn
5	Destination direction
6	Destination distance

Intersection zoom map

- An enlarged map is displayed when approaching a roundabout or intersection. (While in route guidance.) Activated by selecting Zoom (On) in setup mode.

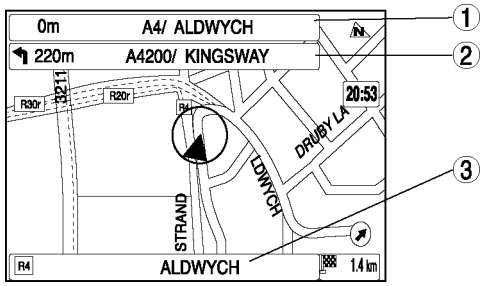

A6E8126T065

1	Distance to the next turn
2	Distance to the turn after the next turn

3	Current road name

Pop Up Menu

- Pop up menu appears when pressing [ENTER] button.
- The following items are displayed on the pop-up menu. The actual displayed items vary according to the selected map, guidance, and other factors.

Note

- Pop up menu is not available on intersection zoom maps.
- Pop up menu cannot be displayed when the intersection zoom map is displayed.

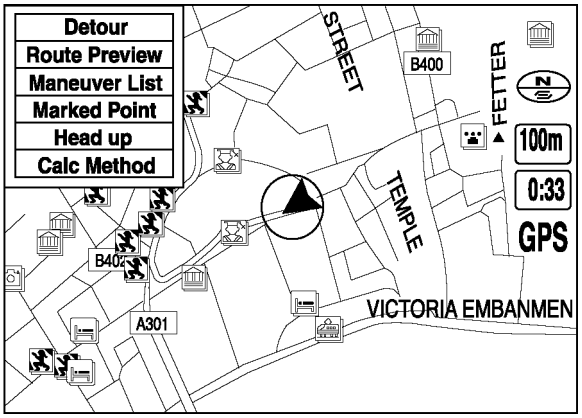

A6E8126T079

No.	Contents	Description
1	Detour	Displays route change options. (See T–76 Detour function.)
2	Route Preview	Displays complete route preview.
3	Maneuver List	Displays a route list.
4	Marked Point	Registers a point indicated by the crosshair cursor.
5	North up/Head up	Selects either north up or head up map display direction.
6	Stop Calc	Cancels route search.
7	Reroute	Searches for another route to return to the original route when the vehicle has moved away from it. (Appears only when the auto reroute function is inactivated. See T–76 Setup Function.)
8	Calc Method	Changes route search settings. (See T–75 Whole route search function.)
9	Volume	Adjusts volume of voice guidance.
10	Guidance Off	Selects/cancels voice guidance.
11	Destination	Registers a point indicated by the crosshair cursor as a destination.
12	Nearest POI	Searches for POI's close to current location of the vehicle.

Destination Setting Function
Outline
- The following instructions explain how destinations can be chosen and set.

Note
- A destination can be set to where the crosshair cursor indicates by selecting the Destination option of the scroll map mode pop-menu.

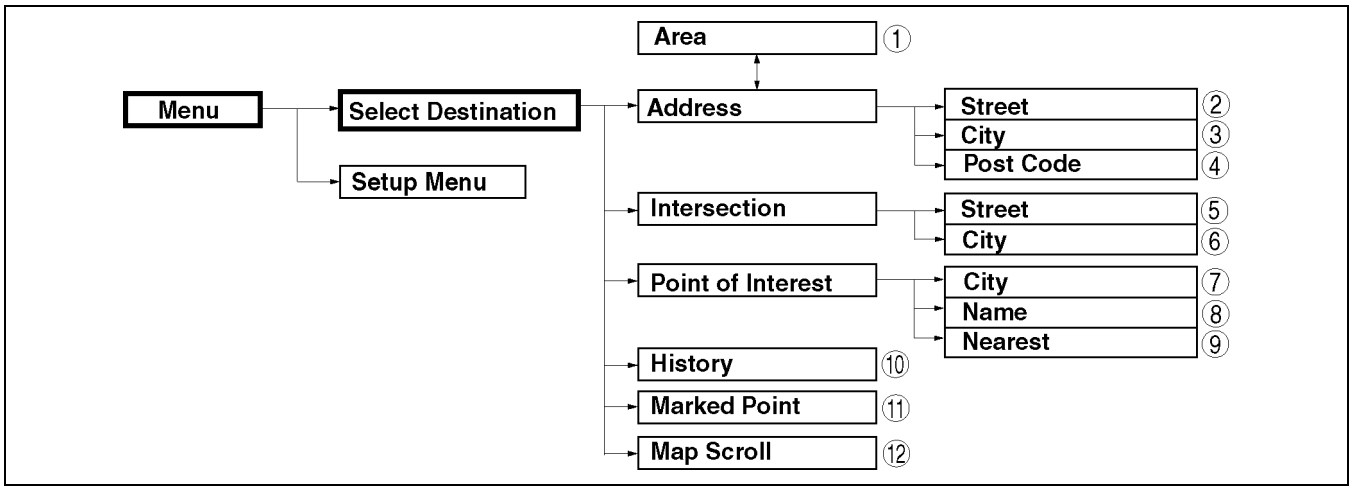

A6E8126T069

No.	Contents
1	Changes area set from the previous destination.
2	Sets destination by selecting city name*, inputting street name and selecting house number.
3	Sets destination by inputting city name*, inputting street name and selecting house number.
4	Sets destination by inputting postal code and street name, and selecting house number.
5	Sets intersection as destination by inputting main street name → cross street names.
6	Sets intersection as destination by inputting city name → main street name → cross street names.
7	Sets destination by selecting POI category, inputting city name and selecting POI.
8	Sets destination by selecting POI category, inputting target name and selecting POI.
9	Sets destination from a list of 20 POI destinations closest to the current position (within a radius of 50 km) by inputting POI category and selecting POI.
10	Sets destination from a list of recent destinations. Up to 50 points including the latest starting point are in the system memory.
11	Sets destination from a list of points stored by the user. Up to 100 points can be stored in the memory.
12	Sets destination by moving the crosshair cursor to the destination when in scroll map mode.

* : Memory stores up to 10 cities visited recently, and city names can be selected.

POI categories

- When setting POI destination, the following categories can be selected. Data for categories according to the selected country will be displayed.

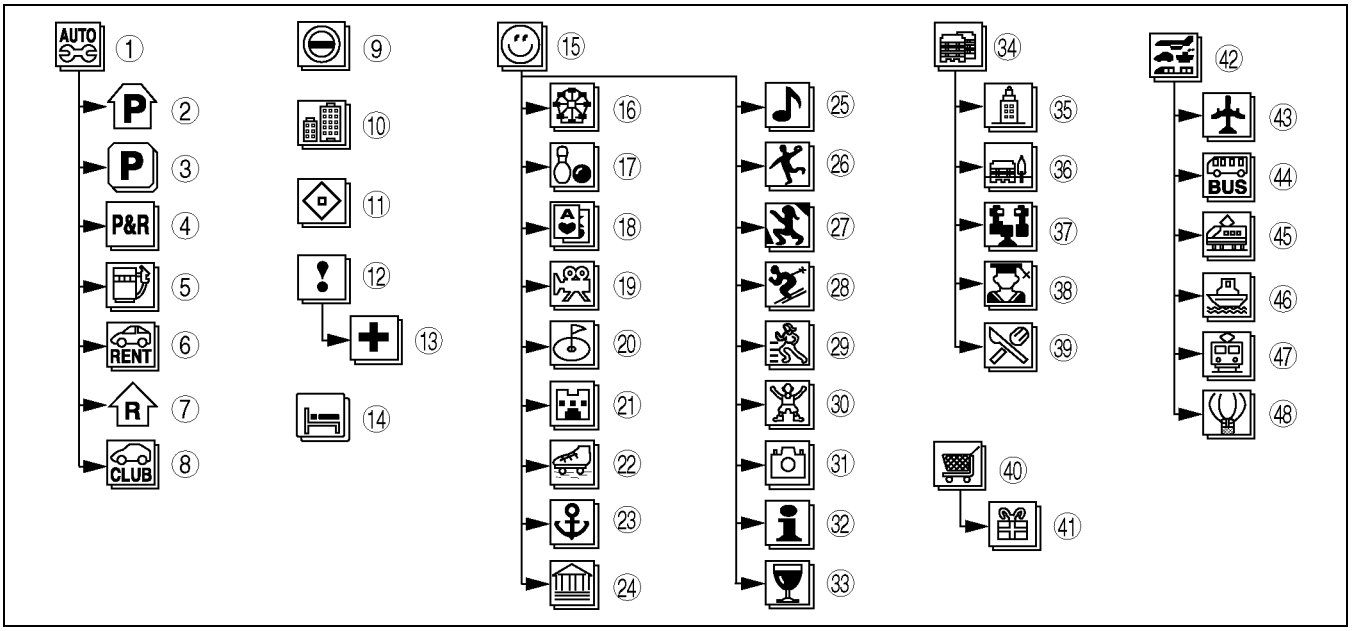

A6E8126T067

1	Auto services
2	Parking garage
3	Open parking area
4	Park & Ride
5	Petrol station
6	Rent a car facility
7	Rest area
8	Motoring organization office
9	Border crossing
10	Business facility
11	City center
12	Emergency
13	Hospital/Polyclinic
14	Hotel or motel
15	Leisure/Recreation
16	Amusement park
17	Bowling center
18	Casino
19	Cinema
20	Golf course
21	Historical monument
22	Ice skating rink
23	Marina
24	Museum

25	Night life
26	Recreation facility
27	Theater
28	Ski resort
29	Sports activity
30	Sports center
31	Tourist attraction
32	Tourist office
33	Winery
34	Public facility
35	City hall
36	Community center
37	Exhibition or conference center
38	University or college
39	Restaurant
40	Shopping
41	Shopping center
42	Transportation
43	Airport
44	Bus station
45	Commuter rail station
46	Ferry terminal
47	Rail way station
48	Public sport airport

Route Search Function

Whole route search function

- After setting a destination, the following route search methods can be used:

No.	Items	Route search method
1	Shortest route setting	• Selects a route according to the shortest distance.
2	Avoid motorway setting	• Selects a route that reduces use of motorways.

Detour function

- The following settings are available when using the detour function:

No.	Items	Contents
1	Alt route setting	• Searches for a maximum of three routes.
2	Detour distance (xx km) setting	• Calculates a detour for the current route based on inputted (xx km) detour distance. • Detour distance (xx km) is designated in setup (route).
3	Avoid streets setting	• Calculates a detour for the current route to avoid user selected streets.
4	Via point setting	• Selects via points. • Up to five points can be set.

Setup Function

- Map, route and system settings can be changed using this function. Also, system information and route simulation can be displayed.

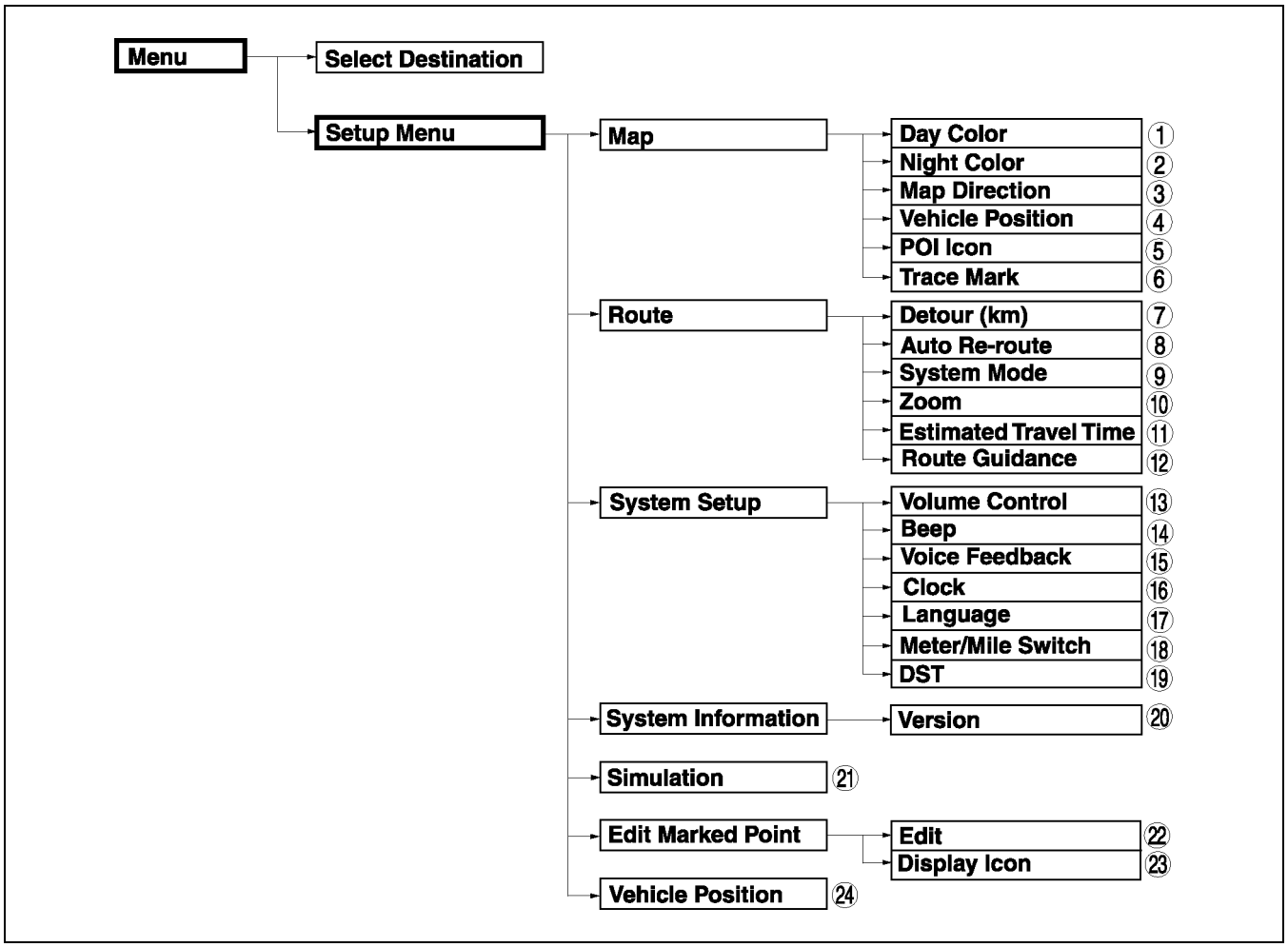

A6E8126T070

No.	Contents	Selected items	Default
1	Sets map screen color (daytime).	Green, Beige, Black	Beige
2	Sets map screen color (nighttime).	Green, Beige, Black	Beige
3	Sets map direction.	North up, Head up	North up
4	Sets display of the vehicle position indicator on the map screen.	Center: The current vehicle position indicator is displayed in the center of the screen. Off Ctr: The current vehicle position indicator is displayed at the bottom of the screen.	Center
5	Selects/cancels display of the POI icons on the map screen.	On (Icons displayed), Off (Icons not displayed)	On
6	Selects/cancels display of the traced route mark on the map screen.	On (Mark displayed), Off (Mark not displayed)	Off
7	Sets the detour distance for the detour xx km function. If mile are selected in the meter/mile setting, then the distance will be in miles.	1, 2, 5, 10, 20	5
8	Selects/cancels automatic activation of auto re-route function.	On (Automatically activated), Off (Not automatically activated)	On
9	Selects map mode/guide map mode after start-up and route calculation. Guide map mode is displayed only while vehicle is on set route.	Map (Map screen), Guide (Guide mode)	Map
10	Selects/cancels automatic display of intersection zoom map.	On (Automatically displayed), Off (Not automatically displayed)	On
11	Selects/cancels voice guidance announcement of estimated travel time.	On (Makes announcement), Off (No announcement)	On
12	Selects/cancels route guidance. The route will not be deleted if route guidance is disabled.	On (Route guidance enabled), Off (Route guidance disabled)	On
13	Adjusts volume for voice guidance.	0, 1, 2, 3, 4,	2
14	Selects/cancels beeping sound when pressing buttons.	On (Emits beep), Off (No beep)	On
15	Selects/cancels voice guidance.	On (Voice guidance enabled), Off (Voice guidance disabled)	On
16	Selects/cancels display of the clock.	On (Displayed), Off (Not displayed)	Off
17	Sets language used.	GB (English), FRE (French), GER (German), ITA (Italian), SPA (Spanish), DUT (Dutch)	GB
18	Sets unit of measurement used.	Metric (Meters), Imperial (Miles)	Metric
19	Selects/cancels daylight saving time mode.	On (enabled), Off (Disabled)	On
20	Displays map disc and software version/information.	–	–
21	Performs a simulation of a route, after Route setup, from starting point to destination.	–	–
22	Displays detailed information about a marked point from the stored list. The icon and name can be changed, or the marked point can be deleted.	–	–
23	Selects/cancels display of icons on the map.	On (Icons displayed), Off (Icons not displayed)	On
24	Adjusts position and direction of the vehicle on the map display.	–	

Guidance Function

- When using route guidance, the map displays and the system voice announces upcoming intersections, highway entrances/ exits, destination information, and passing via points.
- The types of voice guidance are as follows:
  - — Normal intersection guidance
  - — Roundabout guidance
  - — Highway entrance guidance
  - — Destination guidance
  - — Via point guidance.
  - — Highway exit guidance

Simple junction guidance

- The following voice guidance is provided:

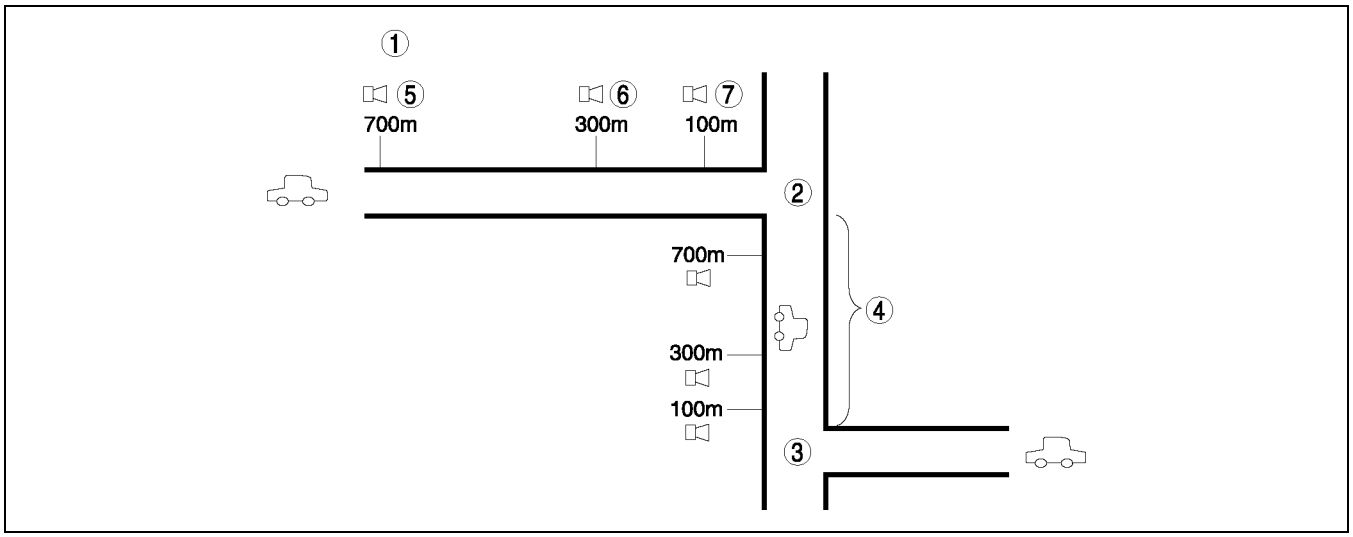

A6E8126T072

1	Right turn guidance example
2	Right turn point
3	Next turn point
4	X m (X>750 m)

5	In 700 meters right turn
6	In 300 meters right turn
7	Right turn ahead

Continuous junction guidance

- A continuous junction condition occurs when the distance from the first to the second turn point is more than 150 meters and less than or equal to 750 meters.
- After passing the first turn point, the next voice guidance is provided.

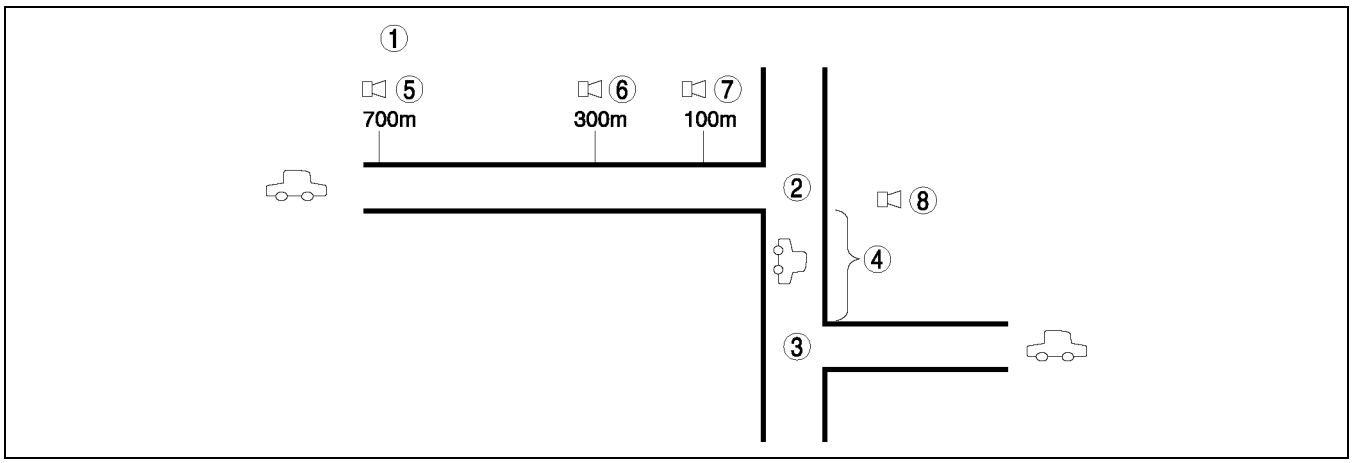

A6E8126T071

1	Right turn followed by left turn guidance example
2	Right turn point
3	Left turn point
4	X m (150 m <X<=750 m)

5	In 700 meters right turn
6	In 300 meters right turn
7	Right turn ahead
8	In X meters, left turn

Multiple junction guidance

- A multiple junction condition occurs when the distance from the first to the second turn point is less than or equal to 150 meters.
- When the last guidance for the first turn point is announced, guidance for the second turn point is also provided.

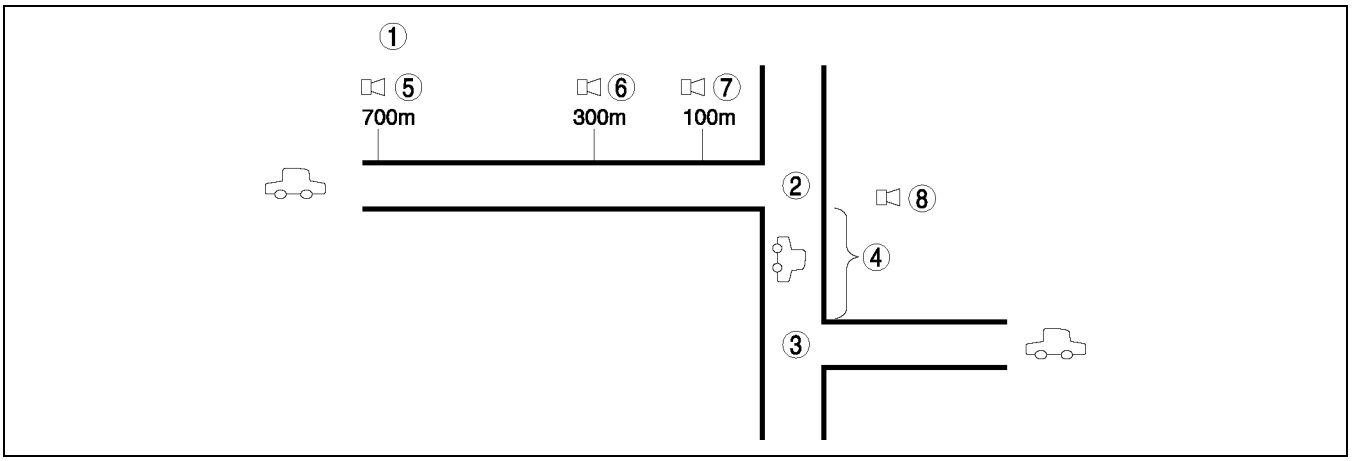

A6E8126T071

1	Right turn followed by left turn guidance example
2	Right turn point
3	Left turn point
4	X m (X<=150 m)

5	In 700 meters right turn
6	In 300 meters right turn
7	Right turn ahead, then left turn
8	Left turn ahead

Simple highway junction guidance

- The following guidance is provided:

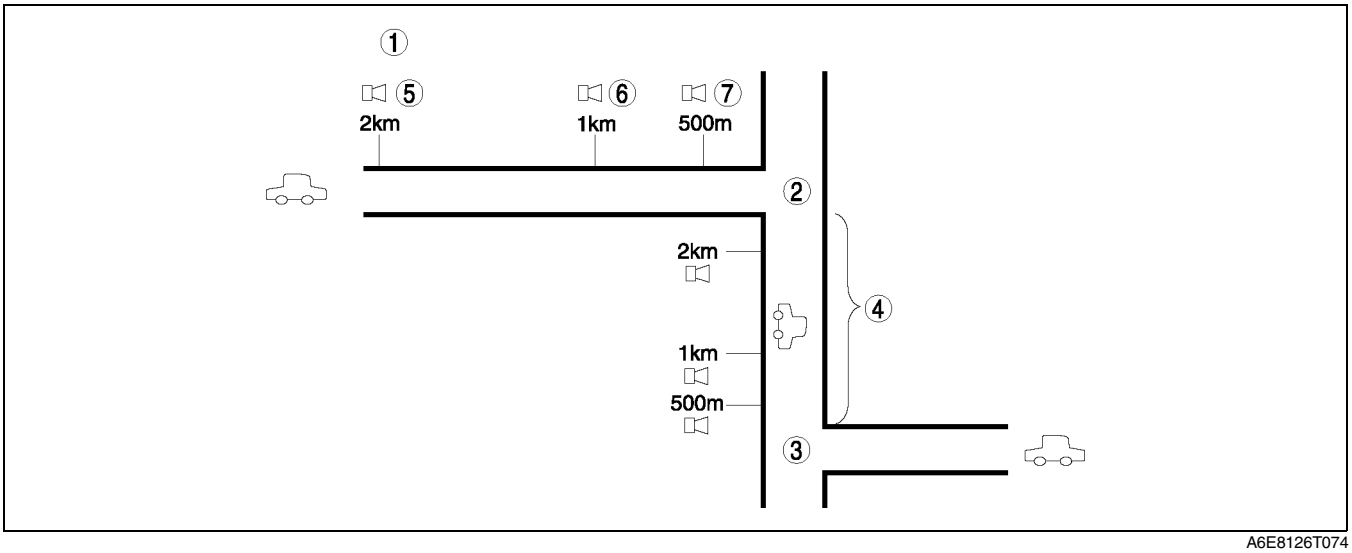

A6E8126T074

1	Right turn guidance example
2	Right turn point
3	Next turn point
4	X m (X>750 m)

5	In 2 kilometers right turn to exit motorway
6	In 1 kilometer right turn to exit motorway
7	Right turn ahead to exit motorway

Continuous highway junction guidance

- A continuous highway junction condition occurs when the distance from the first to the second turn point is more than 500 meters and less than or equal to 750 meters.
- After passing the first turn point, the next voice guidance is provided.

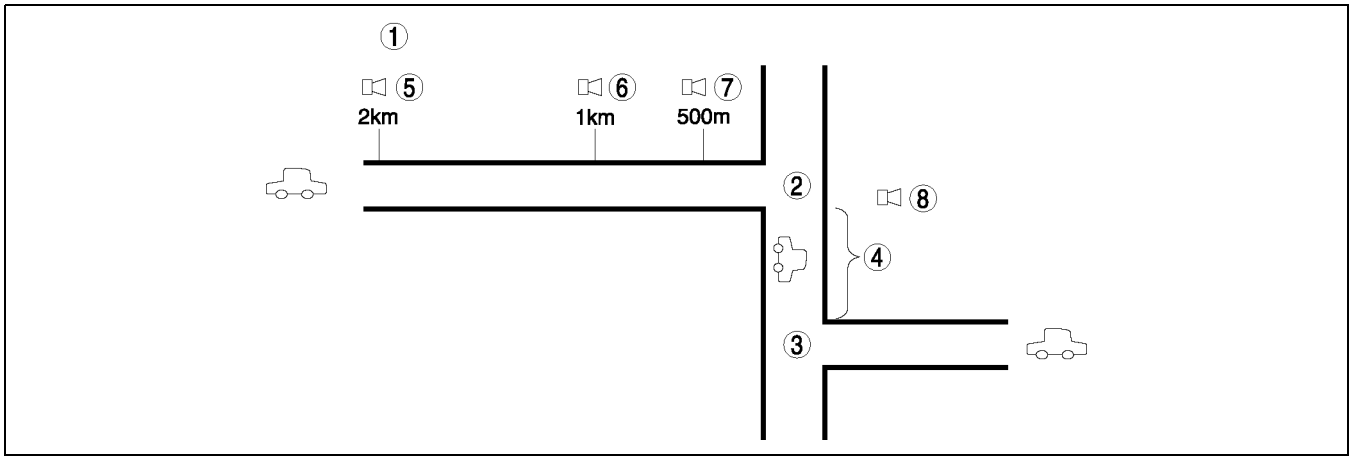

A6E8126T073

1	Right turn followed by left turn guidance example
2	Right turn point
3	Left turn point
4	X m (500 m<X<=750 m)

5	In 2 kilometers right turn to exit motorway
6	In 1 kilometer right turn to exit motorway
7	Right turn ahead to exit motorway
8	In X meters keep left

Multiple highway junction guidance

- A multiple highway junction condition occurs when the distance from the first to the second turn point is less than or equal to 500 meters.
- When the last guidance for the first turn point is announced, guidance for the second turn point is also provided.

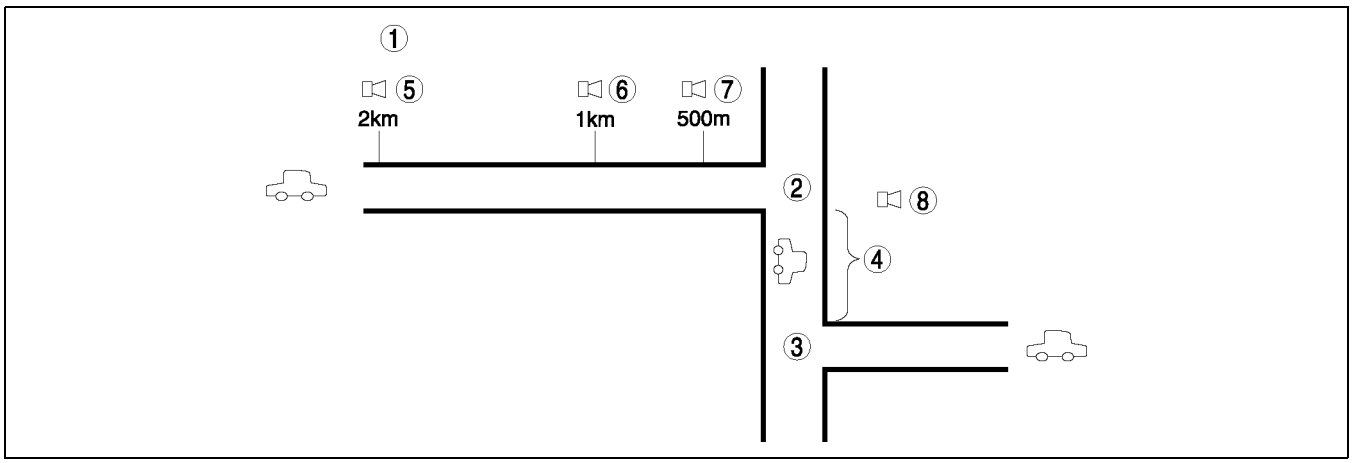

A6E8126T073

1	Right turn followed by left turn guidance example
2	Right turn point
3	Left turn point
4	X m (X<=500 m)

5	In 2 kilometers right turn to exit motorway
6	In 1 kilometer right turn to exit motorway
7	Right turn ahead to exit motorway then keep left
8	Keep left ahead

Intersection Distance Display

- When approaching the next guidance point, the distance to that point is counted down.
- In case of a continuous or multiple junction, guidance point bars for the next two turns will be displayed.
- In case of a continuous or multiple junction, after the first turn point is passed the following occurs:
  1. Next turn guidance point bar → Current road
  2. Turn after next turn guidance point bar → Next turn guidance point bar

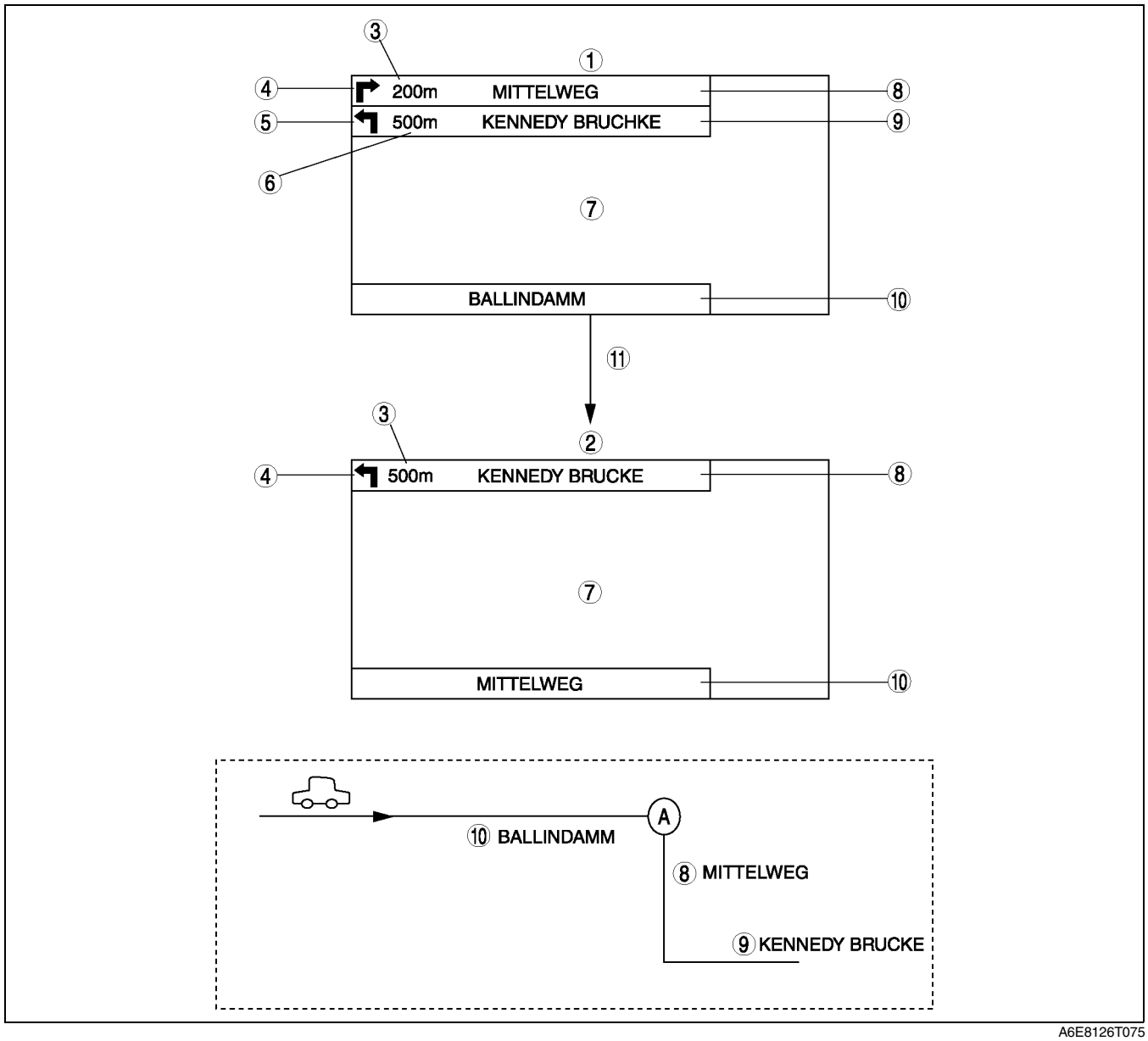

A6E8126T075

1	Continuous, multiple junction
2	Simple junction
3	Distance to the next turn
4	Shape of the next turn
5	Shape of the turn after the next turn
6	Distance to the turn after the next turn

7	Current map screen
8	Name of the next road
9	Name of the road after the next road
10	Name of the current road
11	Vehicle arriving at point A

T

Operation While Driving Display Function
Screen activation

- The following operation while driving warning screen appears when the unit determines from the pulse of the speedometer sensor that the vehicle is moving.



A6E8126T076

Activation condition

- When driving and the following screens are displayed, operating the following buttons will activate the warning screen.

No.	Items		Screen contents/Cursor position	Indicated buttons
1	Menu screen		Menu screen, destination setting screen, set up screen	[Joystick], [ENTER], [ZOOM], [MENU]
2	Current position map screen, scroll map screen	No pop-up	–	[Joystick], [MENU]
		Pop-up	Detour, Destination, Nearest POI	[ENTER], [MENU]
			Route Preview, Maneuver List, Marked Point, Head up/North up, Calc Method, Reroute, Volume, Guidance Off	[MENU]
3	Guide mode map screen	No pop-up	–	[MENU]
		Pop-up	Detour	[ENTER], [MENU]
			Route Preview, Maneuver List, Marked Point, Calc Method, Reroute, Volume, Guidance Off	[MENU]
4	Intersection zoom map		–	[MENU]

CRUISE CONTROL SYSTEM

OUTLINE

A6E812801011T01

- The cruise control system allows the driver to maintain selected vehicle speed without operating the accelerator when driving on an open highway.
- The cruise actuator controls the throttle valve to maintain vehicle speed.
- The construction and operation of cruise control system is essentially carried over from that of the 626 (GF) model, except for the following:

Comparison with 626 (GF) model

Item		Comparison
Cruise actuator		• Cruise actuator with built-in control module has been adopted • Motor-type system has been adopted • Tap up/tap down function has been added • Vehicle speed at which cruise control setting is available has been changed
Actuator cable		Actuator cable with adjuster has been adopted
Cruise control switch		Embedded type (in steering wheel) has been adopted
Vehicle speed signal input		ABS (ABS/TCS) HU/CM (with ABS (ABS/TCS))
		DSC HU/CM (with DSC)
Instrument cluster	Cruise set indicator light	LED has been adopted
	Cruise main indicator light	
Clutch switch (MTX)		Same as the 626 (GF) model
TR switch (ATX)		
Brake switch		

STRUCTURAL VIEW

A6E812801011T02

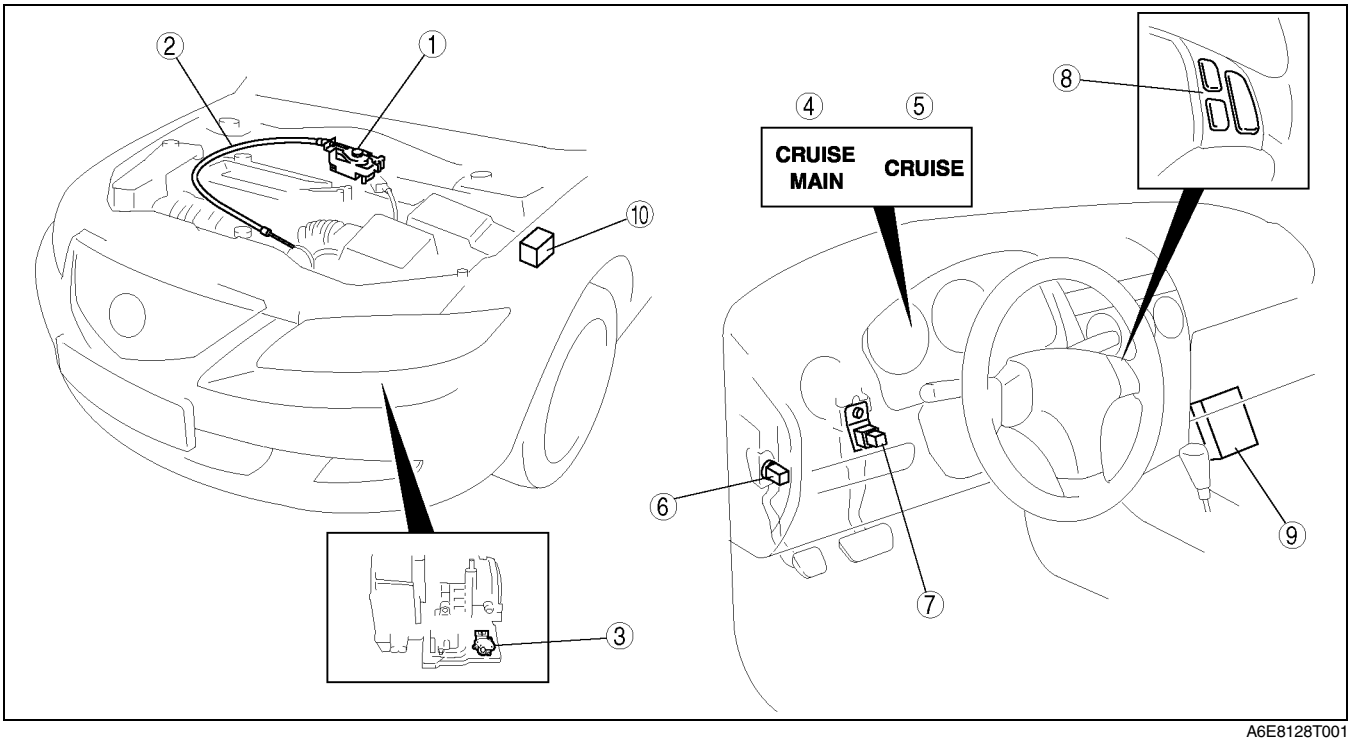

A6E8128T001

1	Cruise actuator
2	Actuator cable
3	TR switch (ATX)
4	Cruise main indicator light
5	Cruise set indicator light
6	Clutch switch (MTX)

7	Brake switch
8	Cruise control switch
9	PCM
10	ABS (ABS/TCS) HU/CM (with ABS (ABS/TCS))
	DSC HU/CM (with DSC)

SYSTEM WIRING DIAGRAM

A6E812801011T03

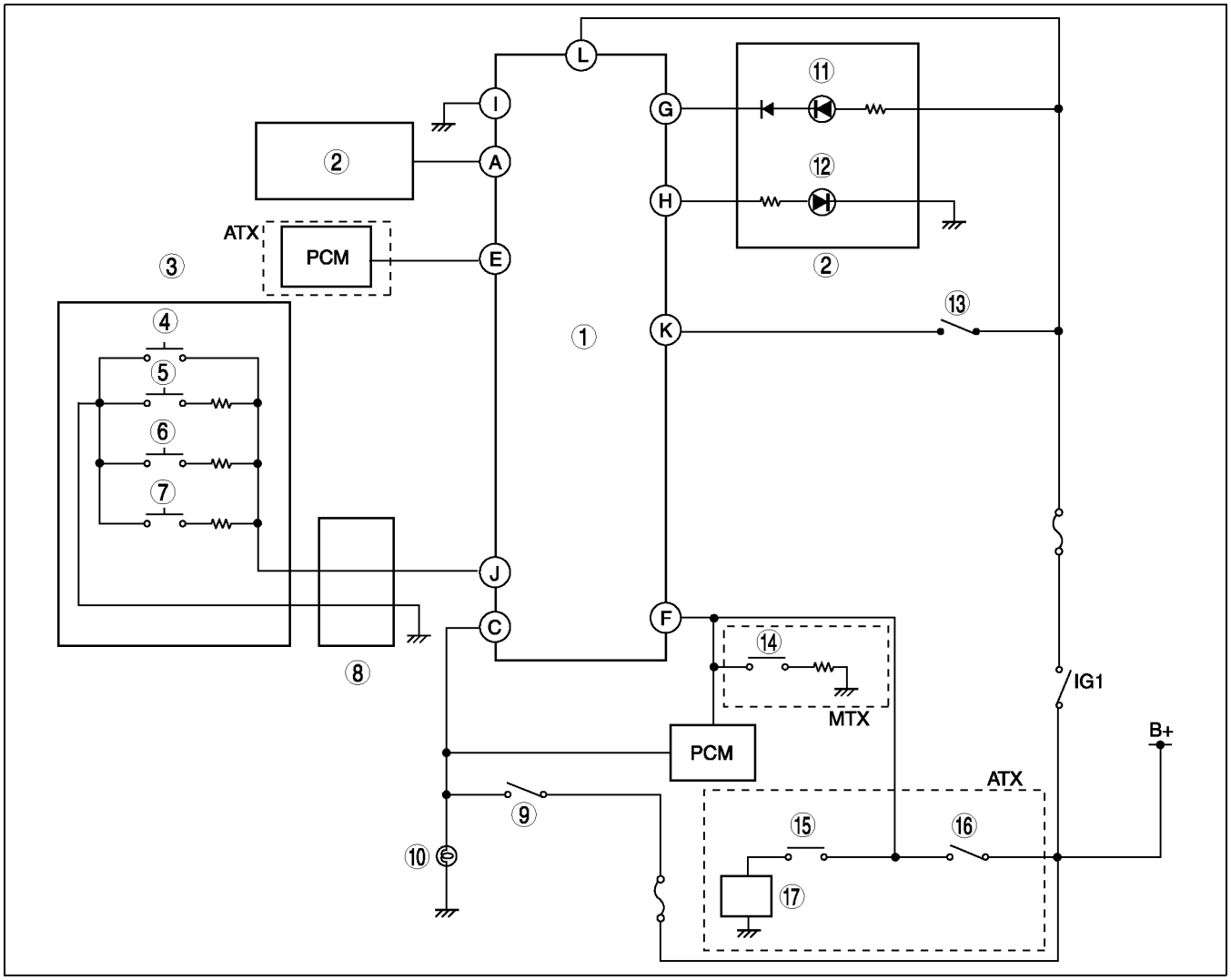

A6E8128T002

1	Cruise actuator (includes control module)
2	ABS (ABS/TCS) HU/CM (with ABS (ABS/TCS))
	DSC HU/CM (with DSC)
3	Cruise control switch
4	Cruise control main switch
5	CANCEL switch
6	SET/COAST switch
7	RESUME/ACCEL switch
8	Clock spring

9	Brake switch
10	Brake light
11	Cruise set indicator light
12	Cruise main indicator light
13	Brake switch 2
14	Clutch switch
15	TR switch (N or P position)
16	Ignition switch (START position)
17	Starter

CRUISE ACTUATOR

A6E812801011T04

- A cruise actuator with a built-in control module has been adopted. With the integration of the cruise actuator and control module, component structure has been simplified and serviceability has been improved.
- A motor-type system has been adopted for the operating structure of the actuator cable. In comparison to the previous vacuum-type system, system control is more exact and smooth.
- Operation of the cruise control system is basically the same as that of the 626 (GF) model, except for the following:
  - — Tap up/tap down function
  - — Cancel condition of cruise control system
  - — Vehicle speed at which cruise control setting is available: 30 km/h {18.6 mph} or more

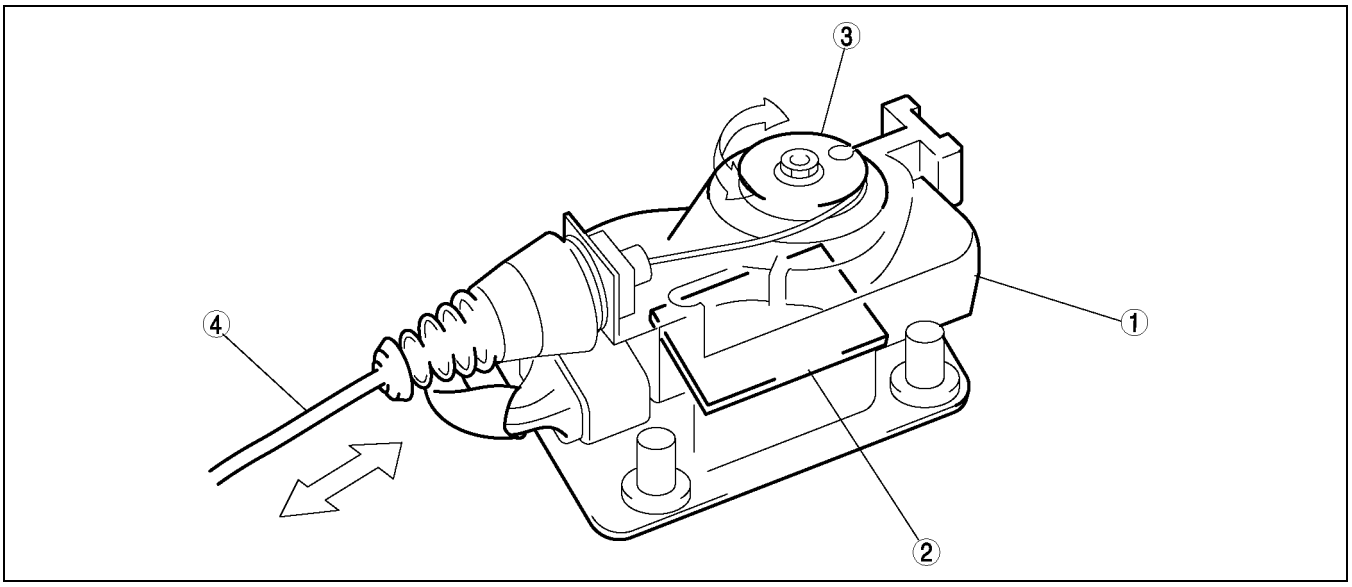

A6E8128T003

1	Cruise actuator
2	Control module

3	Plate
4	Actuator cable

T

Tap Up/Tap Down Function

- When the vehicle is driving at a constant speed sat by the cruise control system, and a signal from either the SET/COAST or RESUME/ACCEL switch is sent to the control module (in cruise actuator) for a very short period (a one-touch control function), the control module increases or decreases the vehicle speed by 1.6 km/h {1.0 mph}.

Cancel Condition of Cruise Control System

- When the vehicle speed becomes less than 22.5 km/h {14.0 mph}, the cruise control system operation is canceled, however the speed sat in the memory is not cleared.

ON-BOARD DIAGNOSTIC

A6E812801011T05

- For easily detecting and locating a malfunction in the cruise control system, a condition detection mode has been included, as well as an operation mode that can check the operation of switches.
- The on-board diagnostic is essentially carried over from that of the 626 (GF) model, except for the following:
  — Due to the integration of the control module in the cruise actuator, the circuit between the cruise actuator and control module is obsolete. As a result, the procedure for the DTC 01 has been changed.
- As the control module is installed in the engine compartment, a waterproof connector is used. As a result, the terminal voltage measurement method for the control module (in cruise actuator) with the on-board diagnostic has been changed. For details, see the workshop manual.

Operation code list

DTC	Output pattern	Diagnosed circuit	
		Mazda 6	626 (GF) model
21		Cruise control switch (SET/COAST switch)	Cruise control switch (SET/COAST switch)
22		Cruise control switch (RESUME/ACCEL switch)	Cruise control switch (RESUME/ACCEL switch)
31		Brake switch	Brake switch
35		• Clutch switch (MTX) • TR switch (ATX)	• Clutch switch (MTX) • TR switch (ATX)
37		Vehicle speed sensor	Vehicle speed sensor

Condition code list

DTC	Output pattern	Diagnosed circuit	
		Mazda 6	626 (GF) model
01		Cruise actuator (Drive circuit)	Cruise actuator
05		Brake switch	Brake switch
07		Brake switch Brake switch 2	Brake switch Brake switch 2
11		Cruise control switch (SET/COAST switch)	Cruise control switch (SET/COAST switch)
12		Cruise control switch (RESUME/ACCEL switch)	Cruise control switch (RESUME/ACCEL switch)
13		Cruise control switch (Ground circuit)	Cruise control switch (Ground circuit)
15		Cruise actuator (Control circuit)	Cruise control module

AIR BAG SYSTEM

OUTLINE

A6E813001046T01

- The air bag system is a device that supplements the passenger restraint function of the seat belts. The air bag system will not have the designed effect if the seat belts are not worn properly.
- The air bag system is composed of the following parts:

Item	Outline
SAS unit	• 2-step deployment control has been added to the front air bag system (driver and passenger-side) deployment control. • Recognizes actually equipped air bag module or pre-tensioner seat belt based on module configuration.
Crash zone sensor	• Detect degree of impact, convert to an electrical signal, and send the signal to the SAS unit. For operation, refer to SAS UNIT, Air Bag Module and Pre-tensioner Seat Belt Deployment Operation. (See T–89 SAS UNIT.)
Side air bag sensor	
Driver-side air bag module	• Dual inflator, 1 inflator divided into 2, has been adopted in accordance with the front air bag system 2-step deployment control.
Passenger-side air bag module	
Side air bag module	• Chest-protection type side air bag module is used in accordance with the adoption of the curtain air bag module.
Curtain air bag module	• Adopted to improve safety in lateral collisions.
Pre-tensioner seat belt	• Ball-type pre-tensioner seat belt has been adopted.
Air bag system warning light	• LED has been adopted.
Passenger-side air bag cut-off indicator light	• Installed on the lower part of the center panel.
Occupancy sensor (passenger-side air bag cut-off system)	• Same as the 626 (GF) model.
Deployment authorization procedure	• Switches to the air bag deployment authorization condition upon configuration performance.

STRUCTURAL VIEW

A6E813001046T02

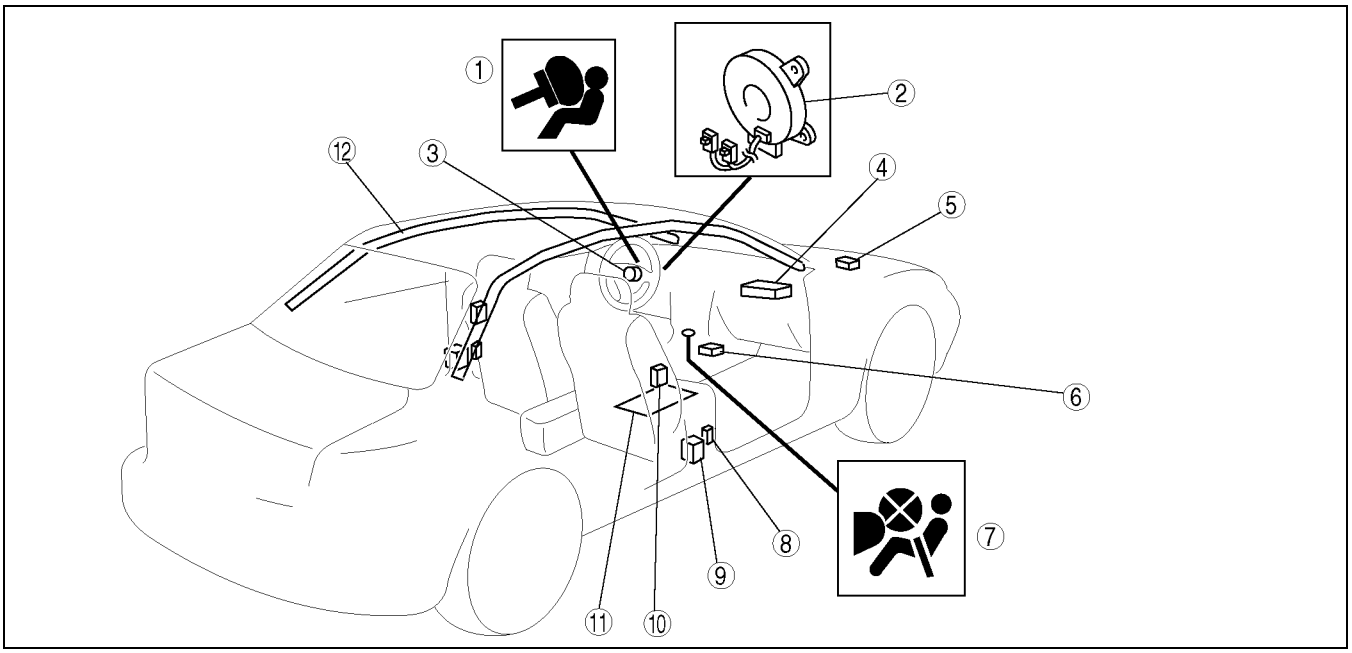

A6E8130T010

1	Air bag system warning light	7	Passenger-side air bag cut-off indicator light
2	Clock spring	8	Side air bag sensor
3	Driver-side air bag module	9	Pre-tensioner seat belt
4	Passenger-side air bag module	10	Side air bag module
5	Crash zone sensor	11	Occupancy sensor
6	SAS unit	12	Curtain air bag module

SYSTEM WIRING DIAGRAM

A6E813001046T03

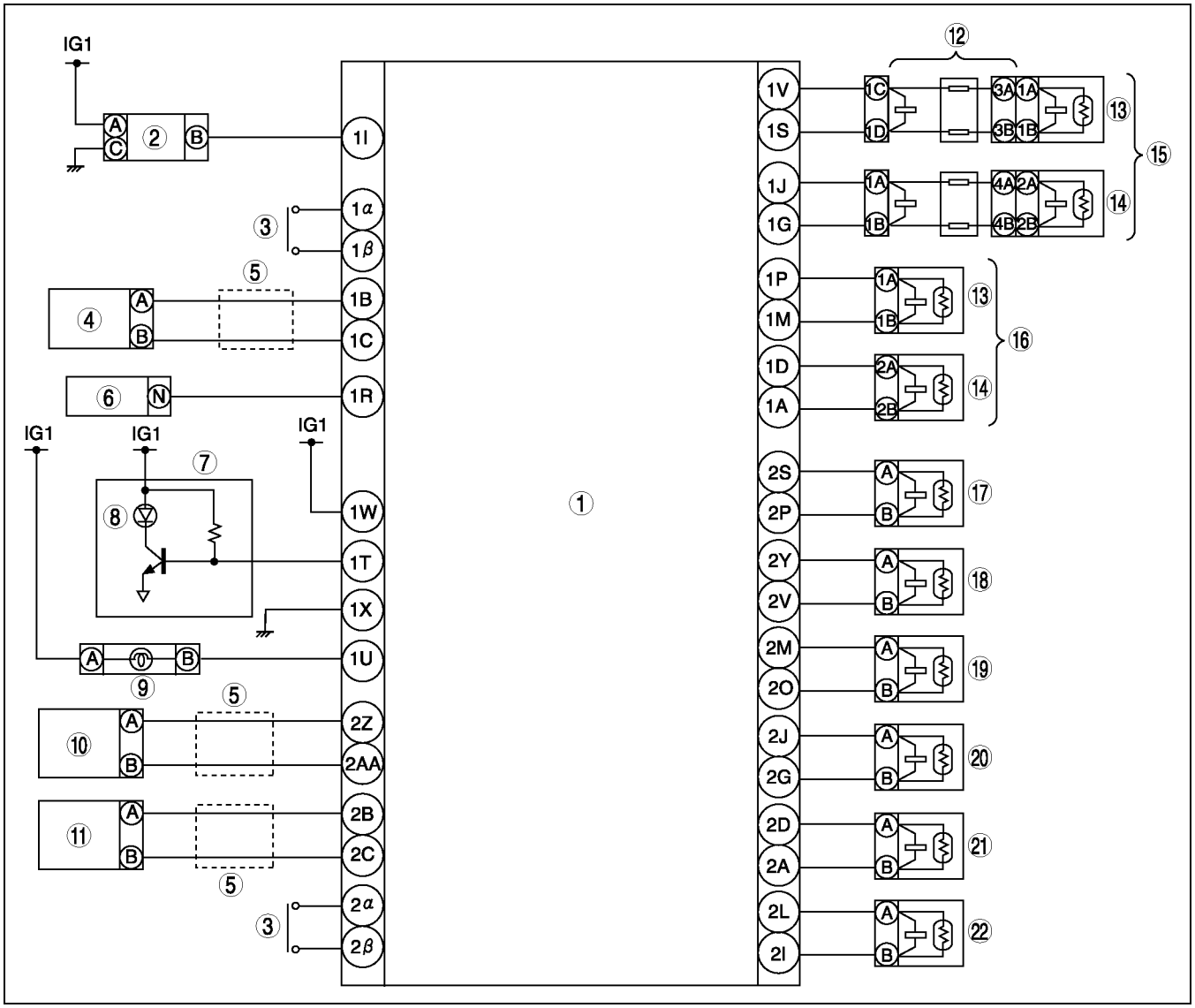

A6E8130T002

1	SAS unit
2	Occupancy sensor
3	Poor connection detector bar
4	Crash zone sensor
5	Twist pair
6	Data link connector
7	Instrument cluster
8	Air bag system warning light
9	Passenger-side air bag cut-off indicator light
10	Driver-side side air bag sensor
11	Passenger-side side air bag sensor

12	Clock spring
13	Inflator No.1
14	Inflator No.2
15	Driver-side air bag module
16	Passenger-side air bag module
17	Driver-side pre-tensioner seat belt
18	Driver-side curtain air bag module
19	Driver-side side air bag module
20	Passenger-side pre-tensioner seat belt
21	Passenger-side curtain air bag module
22	Passenger-side side air bag module

SAS UNIT

A6E813057030T01

Outline

- A 2-step air bag deployment control system has been adopted. In case of a frontal or frontal offset collision, an optimal air bag deployment force is matched to the impact force. The inflators for the driver and passenger-side air bag modules have two tiers, and deploy at either a low or high rate, according to the force of the impact.
- Based on the module configuration, operation (deployment) matching the actual type of air bag module or pre-tensioner seat belt setting variation can be controlled. If the module configuration is incomplete or incorrect, the on-board diagnosis function displays a DTC. (See T–97 ON-BOARD DIAGNOSTIC FUNCTION.) If the SAS unit is replaced, it is necessary to perform the module configuration to match the specifications of the vehicle in which it is being installed. Refer to the Workshop Manual for the procedure.

Air Bag Module and Pre-tensioner Seat Belt Deployment Operation

Front air bag system (2-step deployment controlj

1. During a frontal or frontal offset collision, the crash sensors in the crash zone sensor and the SAS unit detect the impact.
2. The degree of impact detected by the crash sensor in the crash zone sensor is converted to an electric signal and sent to the SAS unit.
3. Simultaneously, the SAS unit crash sensor converts the degree of impact detected to an electrical signal.
4. The SAS unit processes the calculations for the two electrical signals at the output control circuit and compares the value to a preset value.
5. The output control circuit determines the degree of impact to the vehicle by the value from the crash sensors, completes an inflator No. 1 or inflator No. 2 ignition circuit, and sends the deployment signal to the air bag modules.

No.	Degree of collision force	Air bag module deployment force	Inflator deployment pattern
1	Large	100 %	Inflator No.1 and inflator No.2 deploy simultaneously.
2	Small	60 %	Inflator No. 1 deploys, then inflator No.2*.

: To scrap the air bag module, inflator No. 2 is deployed.

6. The SAS unit completes an ignition circuit for the pre-tensioner seat belts that is synchronized to the deployment of the driver and passenger-side air bag modules, and an operation signal is sent to the pre-tensioner seat belts.

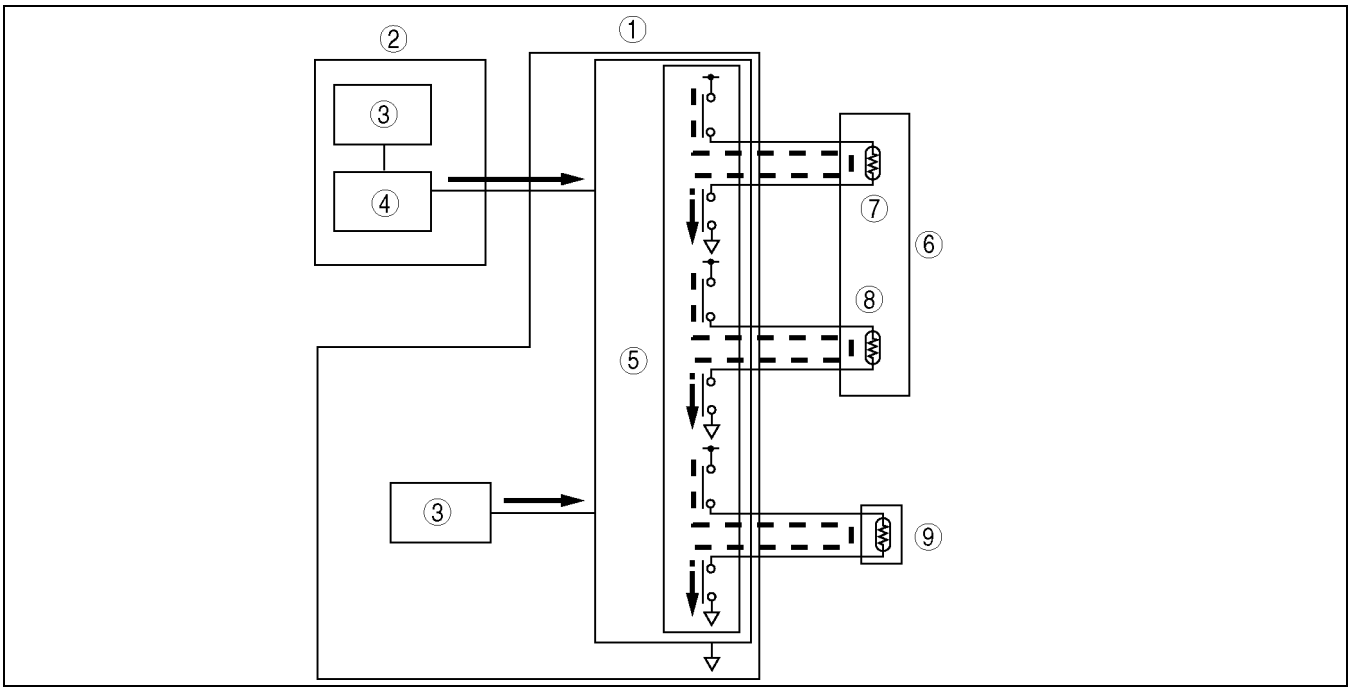

A6E8130T005

1	SAS unit
2	Crash zone sensor
3	Crash sensor
4	Signal amplification circuit
5	Output control circuit

6	Front air bag module (driver or passenger-side air bag module)
7	Inflator No.1
8	Inflator No.2
9	Pre-tensioner seat belt

Side air bag system

1. During a lateral collision to the vehicle, the crash sensors in the side air bag sensor and SAS unit detect the collision.
2. The degree of impact detected by the crash sensor in the side air bag sensor is converted to an electrical signal and sent to the SAS unit through the signal amplification circuit.
3. Simultaneously, the SAS unit crash sensor converts the degree of impact detected to an electrical signal.
4. The SAS unit processes the calculations for the two electrical signals at the ouput control circuit and compares the value to a preset value.
5. The output control circuit determines the degree of impact to the vehicle by the value from the crash sensors, completes a side air bag module and curtain air bag module ignition circuit, and sends the deployment signal to the air bag modules.

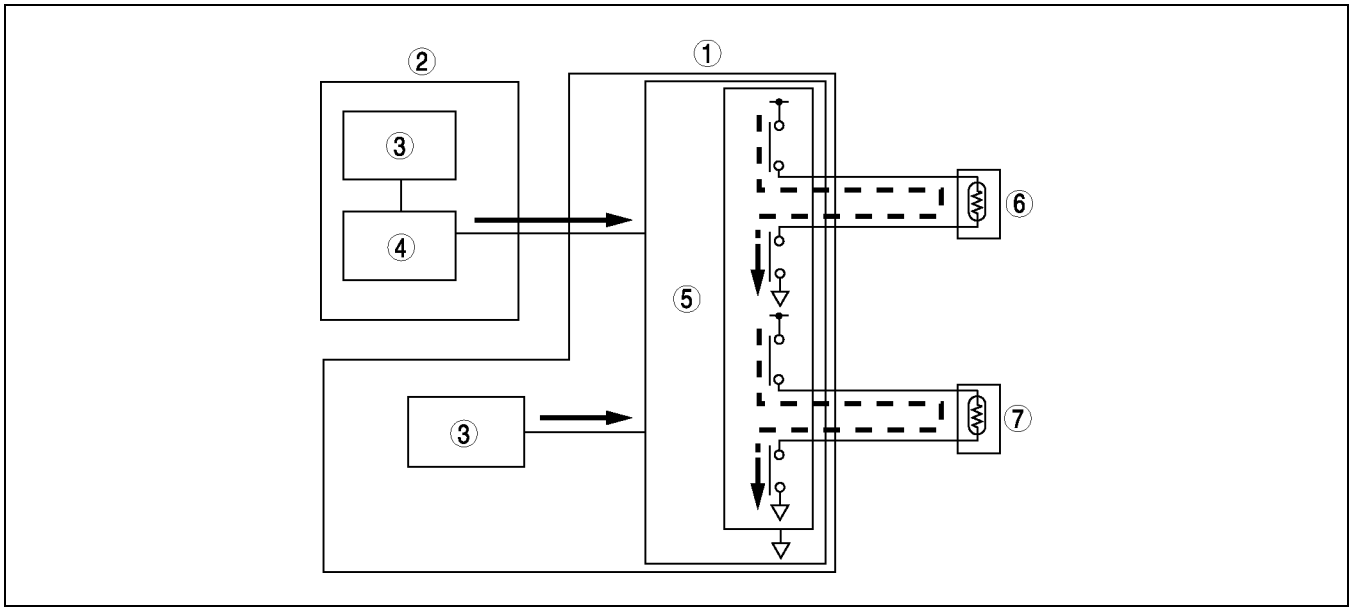

A6E8130T006

1	SAS unit
2	Side air bag sensor
3	Crash sensor
4	Signal amplification circuit

5	Output control circuit
6	Side air bag module
7	Curtain air bag module

Module configuration

Function

- Module configuration is performed to provide an initial setting for the SAS unit according to the actually equipped air bag module, pre-tensioner seat belt and occupancy sensor.
- If there is a mismatch between the air bag system configuration and the initial setting for the SAS unit, a DTC is displayed.
- The module configuration is performed using only the **SST** (WDS or equivalent).

DRIVER-SIDE AIR BAG MODULE

A6E813057010T01

Outline

- A dual inflator, 1 inflator divided into 2, has been adopted in accordance with the front air bag system 2-step deployment control.

Inflator Operation

1. The igniter built into the inflator begins to build up heat when the operation (deployment) signal is sent from the SAS unit. The inflammation agent is ignited by the build up of heat of the igniter.
2. The ignition of the inflammation agent causes the combustion of an agent which releases nitrogen gas.
3. The nitrogen gas is cooled at the filter, and the filtrate is injected into the air bag.

Note

- The gas injection outlets for inflators are divided into two tiers. Gas from inflator No.1 is injected from the No.1 tier, and from the No. 2 tier of is inflator No. 2.

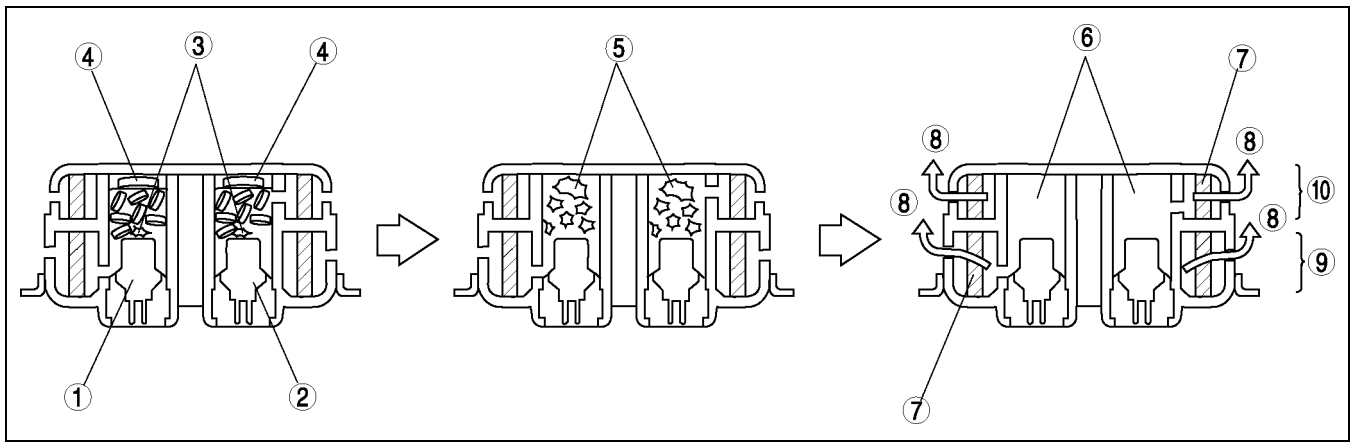

A6E8130T007

1	Ignitor (inflator No.1)
2	Ignitor (inflator No.2)
3	Ignition of inflammation agent
4	Gas generating agent
5	Gas generating agent combustion

6	Nitrogen gas
7	Filter
8	To air bag
9	Ist step
10	2nd step

T

PASSENGER-SIDE AIR BAG MODULE

A6E813057050T01

Outline

- A dual inflator, 1 inflator divided into 2, has been adopted in accordance with the front air bag system 2-step deployment control.

Inflator Operation

1. The igniter built into the inflator begins to build up heat when the operation (deployment) signal is sent from the SAS unit. The inflammation agent is ignited by the build up of heat of the igniter.
2. The ignition of the inflammation agent causes the combustion of an agent which releases nitrogen gas.
3. The nitrogen gas is cooled at the filter, and the filtrate is injected to the air bag.

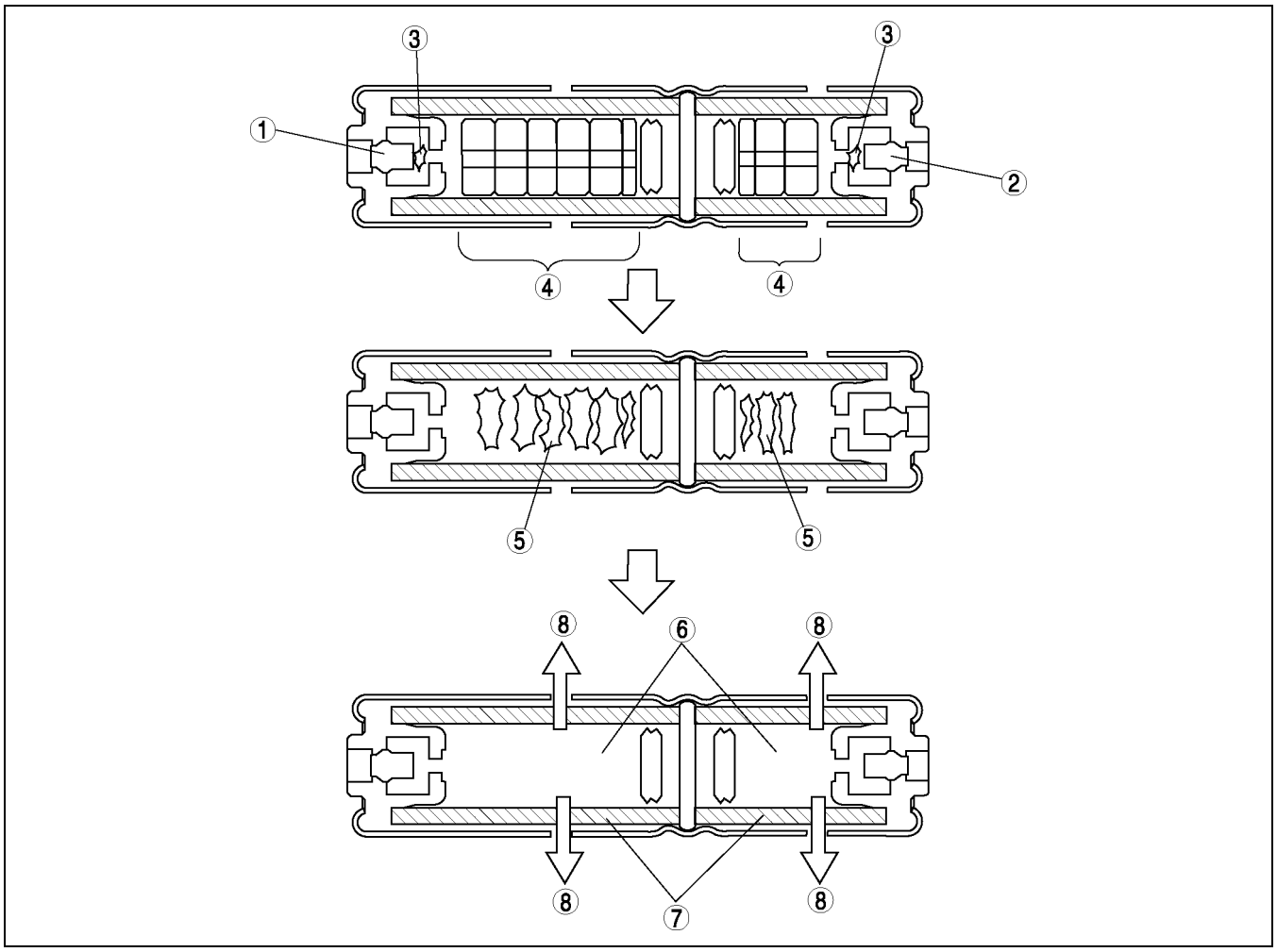

A6E8130T008

1	Ignitor (inflator No.1)
2	Ignitor (inflator No.2)
3	Ignition of inflammation agent
4	Gas generating agent

5	Gas generating agent combustion
6	Nitrogen gas
7	Filter
8	To air bag

SIDE AIR BAG MODULE

A6E813000147T01

Function

- During a collision to the side of the vehicle, the air bag operates (deploys) after receiving an operation signal from the SAS unit, defusing impact to the chest area of the driver and front passenger.

Construction

- Side air bag modules are installed on the outboard sides of the front seat backs.
- The side air bag module is composed of an inflator, module cover and air bag.
- When an air bag deploys, the side air bag module cover is spread apart by the generation of argon gas from the inflator, inflating the air bag.

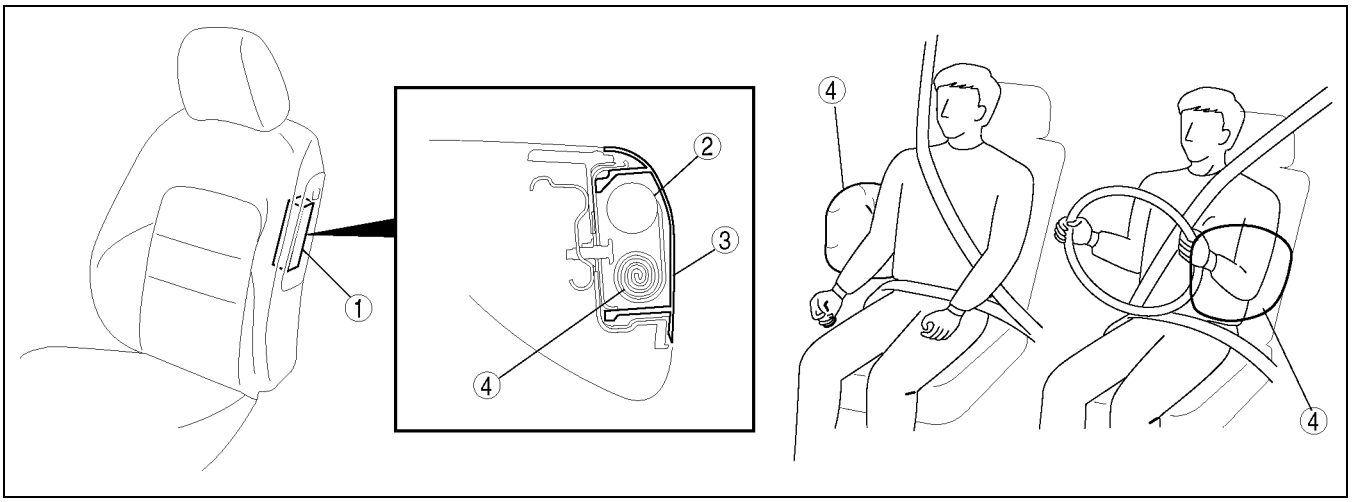

A6E8130T003

1	Side air bag module
2	Inflator

3	Module cover
4	Air bag

T

Operation

Air bag module deployment operation

- Refer to the SAS UNIT, Air Bag Module and Pre-tensioner Seat Belt Deployment Operation. (See T–89 SAS UNIT.)

Inflator operation

1. The igniter built into the inflator begins to build up heat when the operation (deployment) signal is sent from the SAS unit. The inflammation agent is ignited by the build up of heat of the igniter.
2. The combustion of the inflammation agent is transmitted to the argon gas.
3. The argon gas expands, breaks the discharge barrier and is injected into the air bag.

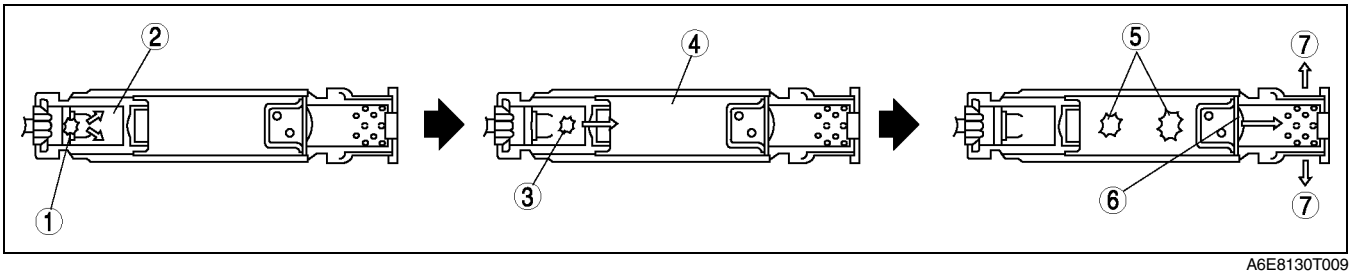

A6E8130T009

1	Ignitor
2	Inflammation agent
3	Combustion of inflammation agent
4	Argon gas

5	Argon gas expansion
6	Discharge barrier
7	To air bag

CURTAIN AIR BAG MODULE

A6E813000171T01

Function

- During a lateral collision to the vehicle, the air bag operates (deploys) after receiving an operation signal from the SAS unit, defusing impact to the side of the head of the driver and other passengers (passenger-side and rear outboard-seated passenger).

Construction

- The curtain air bag modules are equipped along the roof edge between the A and B pillars.
- The curtain air bag module is composed of the inflator, pipe, bag cover, and air bag.
- When the curtain air bag deploys, the A-pillar trim and headliner is spread apart by argon gas generated from the inflator, inflating the air bag.

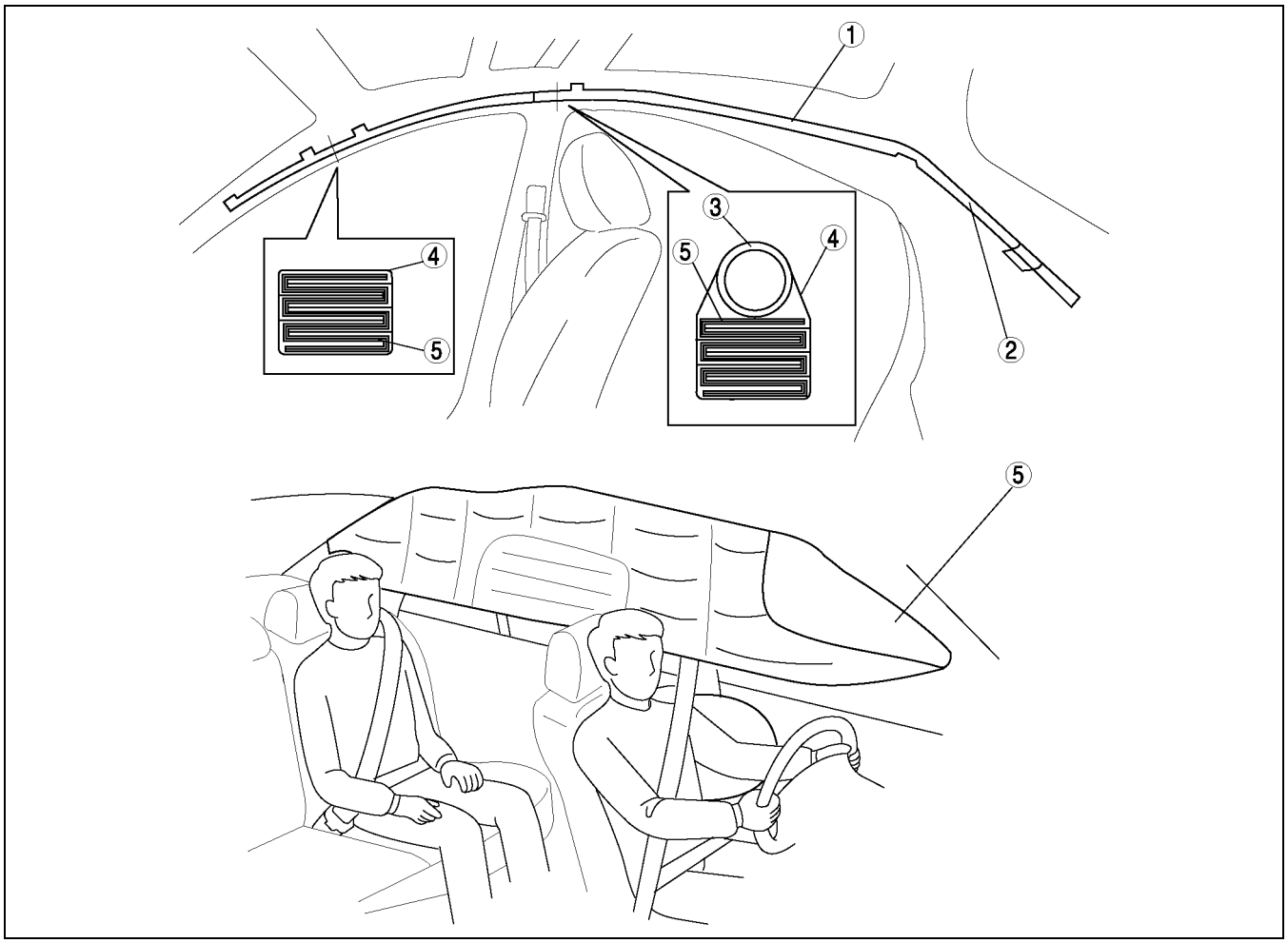

A6E8130T004

1	Curtain air bag module
2	Inflator
3	Pipe

4	Bag cover
5	Air bag

Operation

Air bag module deployment operation

- Refer to SAS UNIT Air Bag Module and Pre-tensioner Seat Belt Deployment Operation. (See T–89 SAS UNIT.)

Inflator operation

- The inflator operation is the same as the side air bag module. Refer to SIDE AIR BAG MODULE. (See T–93 SIDE AIR BAG MODULE.)

PRE-TENSIONER SEAT BELT

A6E813057630T01

Function

- When a vehicle is involved in a frontal or frontal offset collision, the pre-tensioner seat belt system receives an operation signal from the SAS control module, retracting and tightening the belt webbing instantly on the driver and front passenger restraints.

Construction

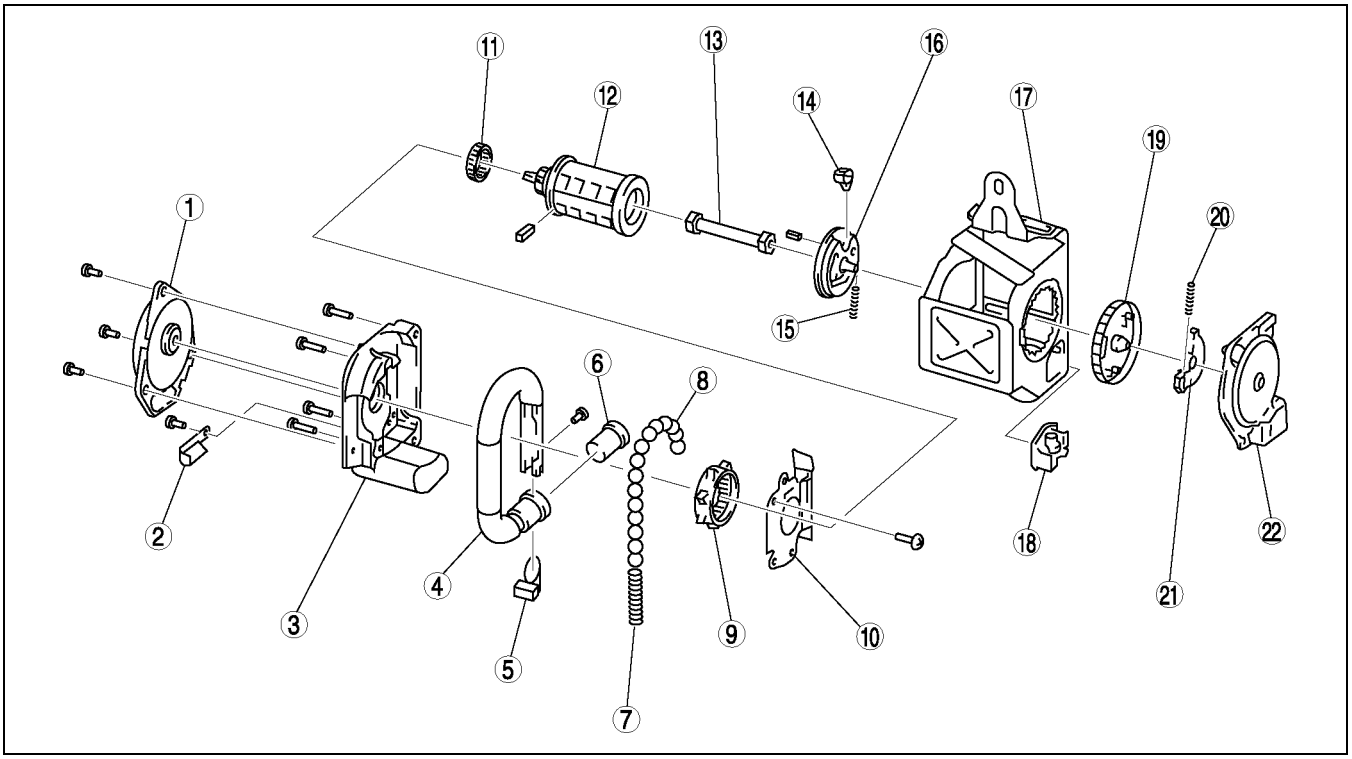

A6E8130T011

1	Spring unit
2	Guide plate
3	Pre-tensioner cover
4	Pipe
5	Guide block
6	Gas generator
7	Stopper spring
8	Ball
9	Ring gear
10	Pre-tensioner plate
11	Pinion

12	Spool
13	Torsion bar
14	Pawl
15	Pawl spring
16	Locking base
17	Housing
18	Sensor unit
19	Lock gear
20	Hook spring
21	Fly wheel
22	Retainer

T

Operation

Before Activation (Normal Condition)

- The spool has a pinion on its end, which rotates with the spool when the belt webbing is retracted or withdrawn.
- There is a ring gear around the pinion. Because the pinion does not engage with the ring gear during normal operation, the ring gear does not rotate even when the belt webbing is retracted or withdrawn.

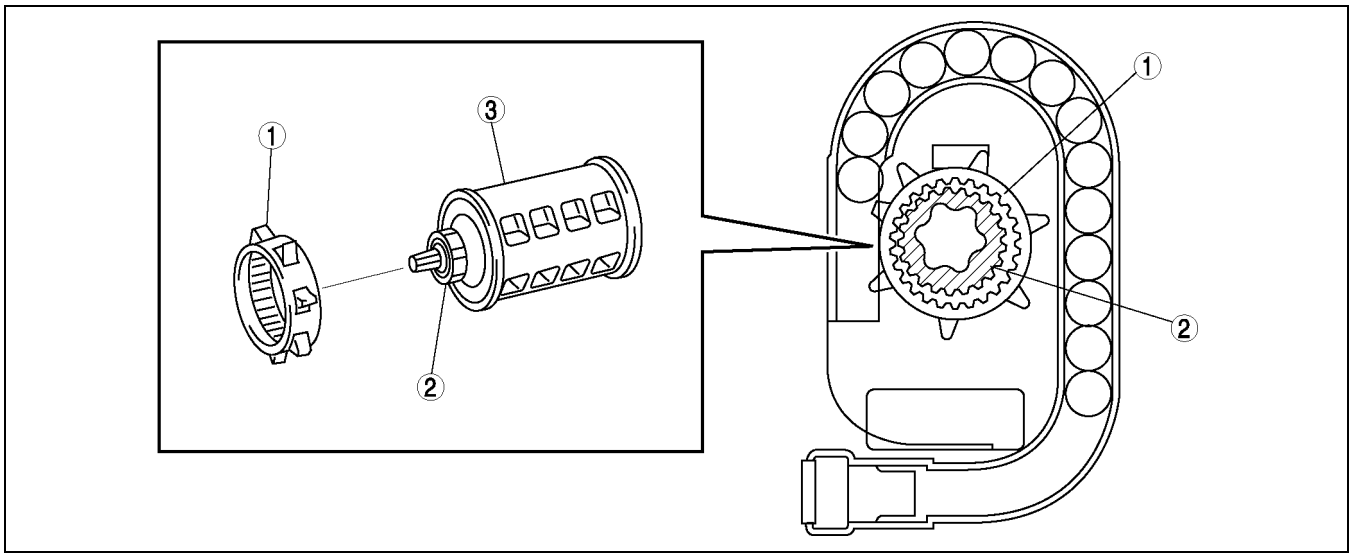

A6E8130T012

1	Ring gear
2	Pinion

3	Spool

During Activation

1. When the pre-tensioner seat belt system receives an operation signal from the SAS control module, gas is produced from each generator forcing up the balls in the tube.
2. The balls shift, pushing the ring gear toward the pinion. Due to this, the ring gear and pinion are engaged.
3. The ball shifting makes the ring gear rotate. The pinion, coupled with the rotation of the ring gear, rotates the spool in the direction of retraction. Thus the belt webbing is tightened.

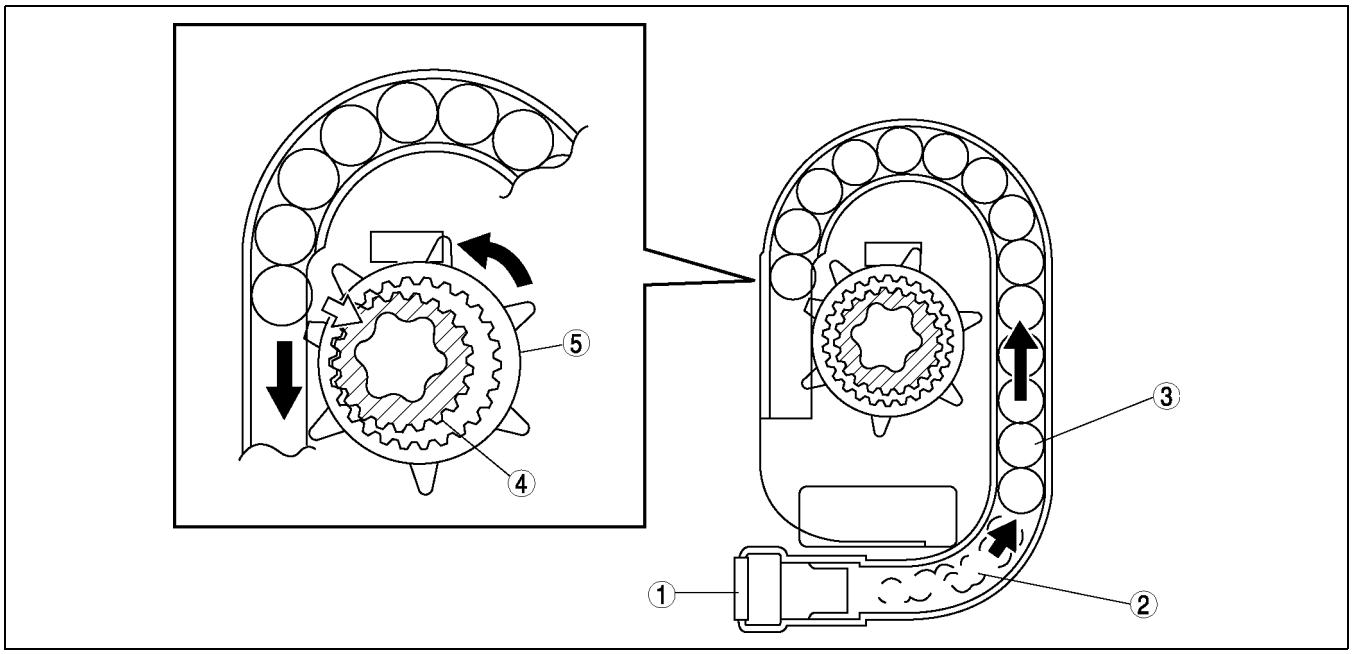

A6E8130T013

1	Gas generator
2	Gas
3	Ball

4	Pinion
5	Ring gear

After Activation

1. Directly after the activation of the pre-tensioner seat belt system and the application of a load to the seat belt in the direction of withdrawal, the ELR lock mechanism operates and the pawl engages the housing gear.
2. When a larger than specified load is applied to the seat belt with the locking base locked by the pawl, the torsion bar twists. Thus the spool rotates and the belt webbing is withdrawn.
3. Because the spool rotates in the direction of withdrawal, the ring gear pushes the balls back and the pinion is disengaged from the ring gear.

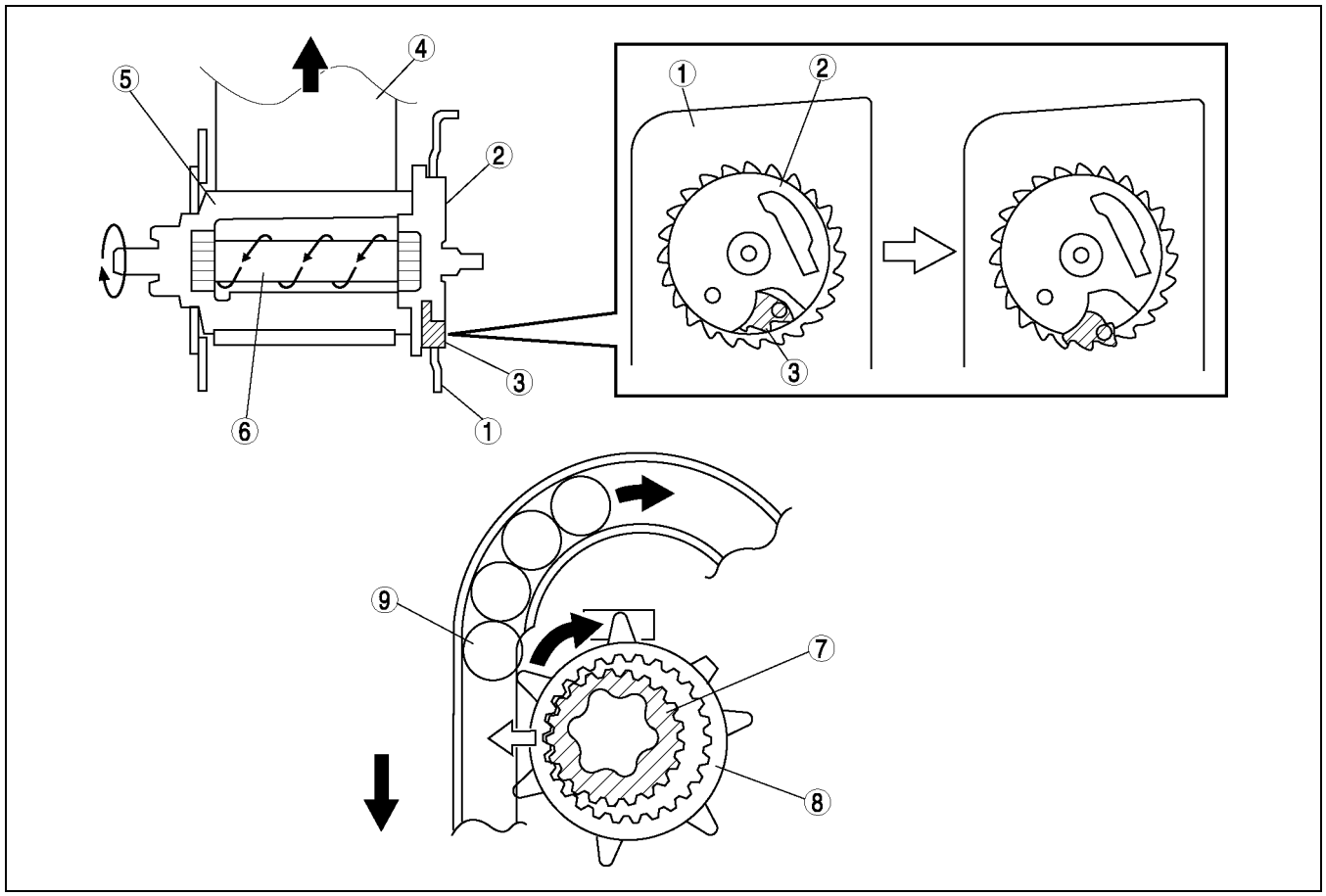

A6E8130T014

1	Housing
2	Locking base
3	Pawl
4	Belt
5	Spool

6	Torsion bar
7	Pinion
8	Ring Gear
9	Ball

ON-BOARD DIAGNOSTIC FUNCTION

A6E813001046T04

Outline

- The on-board diagnostic function consists of the following functions: a failure detection function, which detects malfunctions in the air bag system-related parts; a memory function, which stores detected DTCs; a self-malfunction diagnostic function, which indicates system malfunctions using DTCs; a PID/data monitoring function, which reads out specific input/output signals; and, an active command mode function, which actively controls the operation of output parts.
- Using an SST (WDS or equivalent), DTCs can be read out and deleted, and the PID/data monitoring function and active command mode function can be activated.
- A fail-safe function, which prevents the abrupt activation of the air bag module and the pre-tensioned seat belt in case of an air bag system malfunction, is included.
- The failure detection function, memory function, and fail-safe function are the same as that of the 626 (GF) model.

Self-Malfunction Diagnostic Function

- The self-malfunction diagnosis function determines that there is a malfunction, outputs a signal, as a DTC, to the DLC-2, and at the same time, flashes the air bag system warning light to advise the driver of a malfunction.
- The air bag system warning light illuminates or flashes to indicate a single DTC according to the present malfunction. (If there is more than one present malfunction, only one DTC will be displayed according to the preset priority ranking.)
- The air bag system warning light will flash the DTC pattern for five cycles, and then will remain illuminated until the ignition switch is turned to the LOCK position.
- If both of the driver-side air bag module connectors are disconnected when SAS unit module configuration is performed, the air bag system warning light will flash. Approx. 15 seconds after the connectors are properly reconnected, the light will go out.
- The self-malfunction diagnostic function consists of two function: present malfunction diagnostic and past malfunction diagnostic. The function of present malfunction diagnostic and past malfunction diagnostic are the same as that of the 626 (GF) model.

DTC table

DTC				Malfunction location
WDS or equivalent	Air bag system warning light			
	Flashing pattern		Priority ranking	
B1231	13		3	SAS unit activation (deployment) control freeze
B1342	12		2	SAS unit
	—	Air bag system warning light is illuminated all the time.	1	SAS unit (DTC 12 detection circuit malfunction)
B1869	—	Air bag system warning light is illuminated all the time.	1	Air bag system warning light system circuit open
	—	Air bag system warning light is illuminated does not illuminate.	—	Air bag system warning light system circuit short to ground
B1870	—	Air bag system warning light is illuminated all the time.	1	Air bag system warning light system circuit short to power supply
B1871	47		19	Occupancy sensor system (communication error)
	48		20	Occupancy sensor system (sensor internal circuit abnormal)
B1877	33		13	Driver-side pre-tensioner seat belt system resistance high
B1878				Driver-side pre-tensioner seat belt system circuit short to power supply
B1879				Driver-side pre-tensioner seat belt system circuit short to ground
B1881	34		12	Passenger-side pre-tensioner seat belt system resistance high
B1882				Passenger-side pre-tensioner seat belt system circuit short to power supply
B1883				Passenger-side pre-tensioner seat belt system short to ground
B1884	18		18	Passenger-side air bag cut-off indicator light system circuit open or short to ground
B1885	33		13	Driver-side pre-tensioner seat belt system resistance low

DTC				Malfunction location
WDS or equivalent	Air bag system warning light			
	Flashing pattern		Priority ranking	
B1886	34		12	Passenger-side pre-tensioner seat belt system resistance low
B1890	18	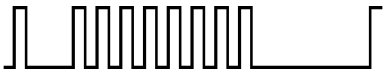	18	Passenger-side air bag cut-off indicator light system circuit short to power supply
B1913	19		11	Driver-side air bag module (inflator No.1) system circuit short to ground
	21		10	Passenger-side air bag module (inflator No.1) system circuit short to ground
B1916	19		11	Driver-side air bag module (inflator No.1) system circuit short to power supply
B1921	14		4	Deployment prohibited because configuration is not set
B1925	21	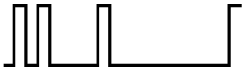	10	Passenger-side air bag module (inflator No.1) system circuit short to power supply
B1932	19		11	Driver-side air bag module (inflator No.1) system resistance high
B1933	21		10	Passenger-side air bag module (inflator No.1) system resistance high
B1934	19		11	Driver-side air bag module (inflator No.1) system resistance low
B1935	21		10	Passenger-side air bag module (inflator No.1) system resistance low
B1992	22		15	Driver-side side air bag module system circuit short to power supply
B1993				Driver-side side air bag module system circuit short to ground
B1994				Driver-side side air bag module system resistance high
B1995				Driver-side side air bag module system resistance low
B1996	23		14	Passenger-side side air bag module system circuit short to power supply
B1997				Passenger-side side air bag module system circuit short to ground
B1998				Passenger-side side air bag module system resistance high
B1999				Passenger-side side air bag module system resistance low

T

DTC				Malfunction location
WDS or equivalent	Air bag system warning light			
	Flashing pattern		Priority ranking	
B2228	19		11	Driver-side air bag module (inflator No.2) system circuit short to ground
B2229	21		10	Passenger-side air bag module (inflator No.2) system circuit short to ground
B2230	19	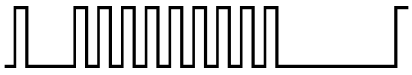	11	Driver-side air bag module (inflator No.2) system circuit short to power supply
B2231	21		10	Passenger-side air bag module (inflator No.2) system circuit short to power supply
B2232	19	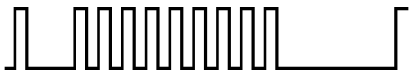	11	Driver-side air bag module (inflator No.2) system resistance high
B2233	21		10	Passenger-side air bag module (inflator No.2) system resistance high
B2234	19		11	Driver-side air bag module (inflator No.2) system resistance low
B2235	21		10	Passenger-side air bag module (inflator No.2) system resistance low
B2296	42		9	Crash zone sensor system (communication error, sensor internal circuit abnormal)
B2444	43		8	Driver-side side air bag sensor system (sensor internal circuit abnormal)
B2445	44		7	Passenger-side side air bag sensor system (sensor internal circuit abnormal)
B2477	54		5	Configuration error
B2773	24		17	Driver-side curtain air bag module system resistance low
B2774				Driver-side curtain air bag module system resistance high
B2775				Driver-side curtain air bag module system circuit short to ground
B2776				Driver-side curtain air bag module system circuit short to power supply

DTC				Malfunction location
WDS or equivalent	Air bag system warning light			
	Flashing pattern		Priority ranking	
B2777	25		16	Passenger-side curtain air bag module system resistance low
B2778				Passenger-side curtain air bag module system resistance high
B2779				Passenger-side curtain air bag module system circuit short to ground
B2780				Passenger-side curtain air bag module system circuit short to power supply
B2867	31	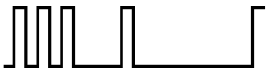	6	SAS unit connector poor connection
U2017	43		8	Driver-side side air bag sensor system (communication error)
U2018	44		7	Passenger-side side air bag sensor system (communication error)

PID/Data Monitoring Function

- By using the PID/data monitoring function, the monitored item of the input/output signal, as set on the SAS unit, can be freely selected and read out in real-time.
- An SST (WDS or equivalent) is used to read out PID/data monitor information.

PID/data monitor table

PID name (definition)	Unit/condition	Condition/specification	SAS unit terminal
CONT_RCM (Number of continuous DTC)	—	• DTC is detected: 1—255 • DTC is not detected: 0	—
D_ABAGR2 (Driver-side air bag module (inflator No.2) resistance)	ohm	Under any condition: 1.5—3.7 ohm	1G, 1J
D_CRSH_S (Driver-side side air bag sensor state)	OK/ COMM FAIL/ INT FAIL	• Sensor normal: OK • Sensor communication error: COMM FAIL • Sensor internal circuit abnormal: INT FAIL	2Z, 2AA
DABAGR (Driver-side air bag module (inflator No.1) resistance)	ohm	Under any condition: 1.5—3.7 ohm	1S, 1V
DR_CURTN (Driver-side curtain air bag module resistance)	ohm	Under any condition: 1.4—3.2 ohm	2V, 2Y
DR_PTENS (Driver-side pre-tensioner seat belt resistance)	ohm	Under any condition: 1.5—3.1 ohm	2P, 2S
DS_AB (Driver-side side air bag module resistance)	ohm	Under any condition: 1.4—3.2 ohm	2M, 2O
DS_AB_ST (Driver-side side air bag module circuit state)	NORMAL/ OPEN/ SHRT GND/ SHRT B+	• Related wiring harness normal: NORMAL • Related wiring harness circuit open: OPEN • Related wiring harness short to ground: SHRT GND • Related wiring harness short to power supply: SHRT B+	2M, 2O
DS_CURT_ST (Driver-side curtain air bag module circuit state)	NORMAL/ OPEN/ SHRT GND/ SHRT B+	• Related wiring harness normal: NORMAL • Related wiring harness circuit open: OPEN • Related wiring harness short to ground: SHRT GND • Related wiring harness short to power supply: SHRT B+	2V, 2Y
DS1_STAT (Driver-side air bag module (inflator No.1) circuit state)	NORMAL/ OPEN/ SHRT GND/ SHRT B+	• Related wiring harness normal: NORMAL • Related wiring harness circuit open: OPEN • Related wiring harness short to ground: SHRT GND • Related wiring harness short to power supply: SHRT B+	1S, 1V

T

PID name (definition)	Unit/condition	Condition/specification	SAS unit terminal
DS2_STAT (Driver-side air bag module (inflator No.2) circuit state)	NORMAL/ OPEN/ SHRT GND/ SHRT B+	• Related wiring harness normal: NORMAL • Related wiring harness circuit open: OPEN • Related wiring harness short to ground: SHRT GND • Related wiring harness short to power supply: SHRT B+	1G, 1J
DSB_P_ST (On demand driver-side pre-tensioner seat belt circuit state)	NORMAL/ OPEN/ SHRT GND/ SHRT B+	• Related wiring harness normal: NORMAL • Related wiring harness circuit open: OPEN • Related wiring harness short to ground: SHRT GND • Related wiring harness short to power supply: SHRT B+	2P, 2S
DSSBLT_PF (Driver-side pre-tensioner seat belt circuit state)	NORMAL/ OPEN/ SHRT GND/ SHRT B+	• Related wiring harness normal: NORMAL • Related wiring harness circuit open: OPEN • Related wiring harness short to ground: SHRT GND • Related wiring harness short to power supply: SHRT B+	2P, 2S
FRNT_CRSH_SNSR (Crash zone sensor state)	OK/ COMM FAIL/ INT FAIL	• Sensor normal: OK • Sensor communication error: COMM FAIL • Sensor internal circuit abnormal: INT FAIL	1B, 1C
OD_D_CRSH (On demand driver-side side air bag sensor state)	OK/ COMM FAIL/ INT FAIL	• Sensor normal: OK • Sensor communication error: COMM FAIL • Sensor internal circuit abnormal: INT FAIL	2Z, 2AA
OD_D_CURT (On demand driver-side curtain air bag module circuit state)	NORMAL/ OPEN/ SHRT GND/ SHRT B+	• Related wiring harness normal: NORMAL • Related wiring harness circuit open: OPEN • Related wiring harness short to ground: SHRT GND • Related wiring harness short to power supply: SHRT B+	2V, 2Y
OD_DAB1_ST (On demand driver-side air bag module (inflator No.1) circuit state)	NORMAL/ OPEN/ SHRT GND/ SHRT B+	• Related wiring harness normal: NORMAL • Related wiring harness circuit open: OPEN • Related wiring harness short to ground: SHRT GND • Related wiring harness short to power supply: SHRT B+	1S, 1V
OD_DAB2_ST (On demand driver-side air bag module (inflator No.2) circuit state)	NORMAL/ OPEN/ SHRT GND/ SHRT B+	• Related wiring harness normal: NORMAL • Related wiring harness circuit open: OPEN • Related wiring harness short to ground: SHRT GND • Related wiring harness short to power supply: SHRT B+	1G, 1J
OD_DSAB_ST (On demand driver-side side air bag circuit state)	NORMAL/ OPEN/ SHRT GND/ SHRT B+	• Related wiring harness normal: NORMAL • Related wiring harness circuit open: OPEN • Related wiring harness short to ground: SHRT GND • Related wiring harness short to power supply: SHRT B+	2M, 2O
OD_F_CRSH (On demand crash zone sensor state)	OK/ COMM FAIL/ INT FAIL	• Sensor normal: OK • Sensor communication error: COMM FAIL • Sensor internal circuit abnormal: INT FAIL	1B, 1C
OD_P_CRSH (On demand passenger-side side air bag sensor state)	OK/ COMM FAIL/ INT FAIL	• Sensor normal: OK • Sensor communication error: COMM FAIL • Sensor internal circuit abnormal: INT FAIL	2B, 2C
OD_P_CURT (On demand passenger-side curtain air bag module circuit state)	NORMAL/ OPEN/ SHRT GND/ SHRT B+	• Related wiring harness normal: NORMAL • Related wiring harness circuit open: OPEN • Related wiring harness short to ground: SHRT GND • Related wiring harness short to power supply: SHRT B+	2A, 2D
OD_PAB1ST (On demand passenger-side air bag module (inflator No.1) circuit state)	NORMAL/ OPEN/ SHRT GND/ SHRT B+	• Related wiring harness normal: NORMAL • Related wiring harness circuit open: OPEN • Related wiring harness short to ground: SHRT GND • Related wiring harness short to power supply: SHRT B+	1M, 1P
OD_PAB2_ST (On demand passenger-side air bag module (inflator No.2) circuit state)	NORMAL/ OPEN/ SHRT GND/ SHRT B+	• Related wiring harness normal: NORMAL • Related wiring harness circuit open: OPEN • Related wiring harness short to ground: SHRT GND • Related wiring harness short to power supply: SHRT B+	1A,1D
OD_P_PSAB_ST (On demand passenger-side side air bag sensor circuit state)	NORMAL/ OPEN/ SHRT GND/ SHRT B+	• Related wiring harness normal: NORMAL • Related wiring harness circuit open: OPEN • Related wiring harness short to ground: SHRT GND • Related wiring harness short to power supply: SHRT B+	2I, 2L
P_ABAGR2 (Passenger-side air bag module (inflator No.2) resistance)	ohm	Under any condition: 1.4—2.9 ohm	1A, 1D
P_PTENSFLT (Passenger-side pre-tensioner seat belt circuit state)	NORMAL/ OPEN/ SHRT GND/ SHRT B+	• Related wiring harness normal: NORMAL • Related wiring harness circuit open: OPEN • Related wiring harness short to ground: SHRT GND • Related wiring harness short to power supply: SHRT B+	2G, 2J

PID name (definition)	Unit/condition	Condition/specification	SAS unit terminal
PABAGR (Passenger-side air bag module (inflator No.1) resistance)	ohm	Under any condition: 1.4—2.9 ohm	1M, 1P
PCRSH_SNSR (Passenger-side side air bag sensor state)	OK/ COMM FAIL/ INT FAIL	• Sensor normal: OK • Sensor communication error: COMM FAIL • Sensor internal circuit abnormal: INT FAIL	2B, 2C
PS_AB (Passenger-side side air bag module resistance)	ohm	Under any condition: 1.4—3.2 ohm	2I, 2L
PS_AB_ST (Passenger-side side air bag sensor circuit state)	NORMAL/ OPEN/ SHRT GND/ SHRT B+	• Related wiring harness normal: NORMAL • Related wiring harness circuit open: OPEN • Related wiring harness short to ground: SHRT GND • Related wiring harness short to power supply: SHRT B+	2I, 2L
PS_CURTN (Passenger-side curtain air bag module resistance)	ohm	Under any condition: 1.4—3.2 ohm	2A, 2B
PS_CURT_ST (Passenger-side curtain air bag module circuit state)	NORMAL/ OPEN/ SHRT GND/ SHRT B+	• Related wiring harness normal: NORMAL • Related wiring harness circuit open: OPEN • Related wiring harness short to ground: SHRT GND • Related wiring harness short to power supply: SHRT B+	2A, 2D
PS_PTENS (Passenger-side pre-tensioner seat belt resistance)	ohm	Under any condition: 1.5—3.1 ohm	2G, 2J
PS1_STAT (Passenger-side air bag module (inflator No.1) circuit state)	NORMAL/ OPEN/ SHRT GND/ SHRT B+	• Related wiring harness normal: NORMAL • Related wiring harness circuit open: OPEN • Related wiring harness short to ground: SHRT GND • Related wiring harness short to power supply: SHRT B+	1M, 1P
PS2_STAT (Passenger-side air bag module (inflator No.2) circuit state)	NORMAL/ OPEN/ SHRT GND/ SHRT B+	• Related wiring harness normal: NORMAL • Related wiring harness circuit open: OPEN • Related wiring harness short to ground: SHRT GND • Related wiring harness short to power supply: SHRT B+	1A, 1D
PSB_P_ST (On demand passenger-side pre-tensioner seat belt circuit state)	NORMAL/ OPEN/ SHRT GND/ SHRT B+	• Related wiring harness normal: NORMAL • Related wiring harness circuit open: OPEN • Related wiring harness short to ground: SHRT GND • Related wiring harness short to power supply: SHRT B+	2G, 2J
RCM_VOLT (System IG1 voltage value)	V	• Ignition switch to ON position: B+ • Other: 0 V	1W

Active Command Mode Function

- The active command mode function is used to freely select simulation items for the output-related parts of the SAS unit, without needing to control the SAS unit.
- A SST (WDS or equivalent) is used to activate this function.

Active command mode table

Command name	Definition	Operation
WRNLAMPCHM	Air bag system warning light	ON/OFF

T

HEATER AND AIR CONDITIONER SYSTEMS

OUTLINE U-2
ABBREVIATION U-2
OUTLINE OF CONSTRUCTION U-2
FEATURES U-2
SPECIFICATIONS U-2
BASIC SYSTEM U-6
BASIC SYSTEM U-6
AIR FILTER U-7
A/C UNIT U-7
CONDENSER U-10
REFRIGERANT LINES U-10
CONTROL SYSTEM U-11
CONTROL SYSTEM U-11
CLIMATE CONTROL UNIT U-13
MANUAL AIR CONDITIONER CONTROL SYSTEM U-15
FULL-AUTO AIR CONDITIONER CONTROL SYSTEM U-19
AIRFLOW TEMPERATURE CONTROL U-23
AIRFLOW VOLUME CONTROL U-26
AIRFLOW MODE CONTROL U-29
AIR INTAKE CONTROL U-31
A/C COMPRESSOR CONTROL U-32
SENSOR FAIL-SAFE FUNCTION U-35
SENSOR SIGNAL DELAY FUNCTION U-35
ON-BOARD DIAGNOSTIC FUNCTION U-36

OUTLINE

ABBREVIATION

A6E850201038T04

A/C	Air conditioning
B+	Battery positive voltage
CPU	Central processing unit
HI	High
IAC	Idle air control
IG	Ignition
L.H.D.	Left hand drive
LO	Low
M	Motor
MAX	Maximum
OFF	Switch off
ON	Switch on
PCM	Powertrain control module
REC	Recirculate
R.H.D.	R.H.D.
TNS	Tail number side light

OUTLINE OF CONSTRUCTION

A6E850201038T01

- The construction and operation of the air conditioner system is essentially carried over from that of the previous PREMACY (CP) model, except for the following features. (See PREMACY Training Manual 3336-1*-99C.) (See PREMACY Training Manual 3351-1A-01A.)

FEATURES

A6E850201038T02

Improved air Conditioning Performance

- A sub-cooling system integrating the condenser and receiver/drier has been adopted to facilitate evaporator operation. This system also reduces the number of parts and the amount of refrigerant.

Improved Visibility

- To improve windshield and front door glass defogging, the climate control unit is designed to automatically turn the air intake mode to FRESH when the airflow mode selector dial is turned to DEFROSTER position.

Reduce Weight

- The A/C unit integrating the cooling unit and heater unit has been adopted to reduce weight.

SPECIFICATIONS

A6E850201038T03

Manual Air Conditioner

Item			Specification
Heating capacity		(kW {kcal/h})	4.400 {3,784}
Airflow volume (during heater operation)	Blower motor	(m^3/h)	310 (L.H.D.) 300 (R.H.D.)
Electricity consumption (during heater operation)	Blower motor	(W)	184
Cooling capacity		(kW {kcal/h})	4.200 {3,612}
Airflow volume (during air conditioner operation)	Blower motor	(m^3/h)	460
Electricity consumption (during air conditioner operation)	Blower motor	(W)	225
	Magnetic clutch	(W)	46
Fan type	Blower motor		Sirocco fan
Refrigerant	Type		R-134a
	Regular amount (approximate quantity)	(g {oz})	470 {16.6} (L.H.D.) 430 {15.2} (R.H.D.)

Item			Specification
A/C compressor	Type		Vane-rotary
	Discharge capacity (ml {cc, fl oz})		120 {120, 4.06}
	Max. allowable speed (rpm)		6,400
	Lube oil	Type	ATMOS GU10
		Sealed volume (approximate quantity) (ml {cc, fl oz})	120 {120, 4.06}
	Magnetic clutch clearance (mm {in})		0.3—0.5 {0.012—0.019}
Condenser	Type		Multiflow (sub-cooling type)
	Radiated heat (kW {kcal/h})		4.69 {4,030}: European (L.H.D.) specs. 5.96 {5,130}: European (U.K.), GCC specs.
	Receiver/drier capacity (ml {cc, fl oz})		190 {190, 6.42}
	Desiccant		Synthetic zeolite
Expansion valve	Type		Block type
Evaporator	Type		Double-tank drawn cup
Refrigerant pressure switch	Type		Dual-pressure: General area
	Operating pressure (MPa {kgf/cm^2, psi})		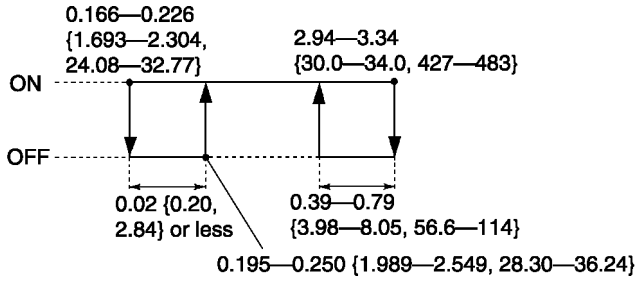
	Type		Triple-pressure: L3 engine, intensely hot area
	Operating pressure (MPa {kgf/cm^2, psi})		• HI and LO pressure switch 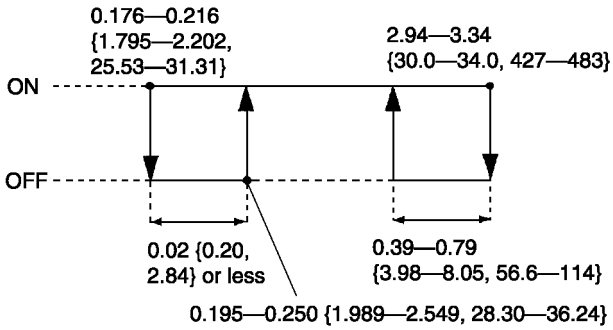 • Middle pressure switch 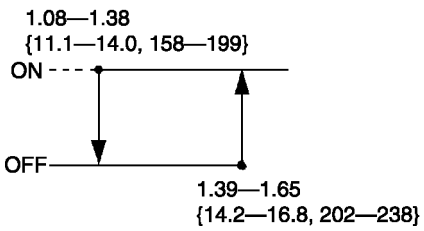

U

Item		Specification
Thermal protector	Type	Bimetallic (Indirect sensing type)
	Operating temperature (°C {°F})	145—155 {293—311}: European (L.H.D. U.K.) specs. 150—155 {302—311}: GCC specs. 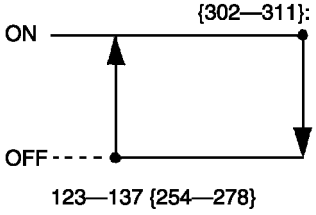
Temperature control		Reheat full air mix type

Full-auto Air Conditioner

Item			Specification
Heating capacity		(kW {kcal/h})	4.400 {3,784}
Airflow volume (during heater operation)	Blower motor	(m^3/h)	310 (L.H.D.) 300 (R.H.D.)
Electricity consumption (during heater operation)	Blower motor	(W)	184
Cooling capacity		(kW {kcal/h})	4.200 {3,612}
Airflow volume (during air conditioner operation)	Blower motor	(m^3/h)	460
Electricity consumption (during air conditioner operation)	Blower motor	(W)	225
	Magnetic clutch	(W)	46
Fan type	Blower motor		Sirocco fan
Refrigerant	Type		R-134a
	Regular amount (approximate quantity)	(g {oz})	470 {16.6} (L.H.D.) 430 {15.2} (R.H.D.)
A/C compressor	Type		Vane-rotary
	Discharge capacity	(ml {cc, fl oz})	120 {120, 4.06}
	Max. allowable speed	(rpm)	6,400
	Lube oil: Type		ATMOS GU10
	Lube oil: Sealed volume (approximate quantity)	(ml {cc, fl oz})	120 {120, 4.06}
	Magnetic clutch clearance	(mm {in})	0.3—0.5 {0.012—0.019}
Condenser	Type		Multiflow (sub-cooling type)
	Radiated heat	(kW {kcal/h})	4.69 {4,030}: European (L.H.D.) specs. 5.96 {5,130}: European (U.K.), GCC specs.
	Receiver/drier capacity	(ml {cc, fl oz})	190 {190, 6.42}
	Desiccant		Synthetic zeolite
Expansion valve	Type		Block type
Evaporator	Type		Double-tank drawn cup

Item		Specification
Refrigerant pressure switch	Type	Dual-pressure: General area
	Operating pressure (MPa {kgf/cm^2, psi})	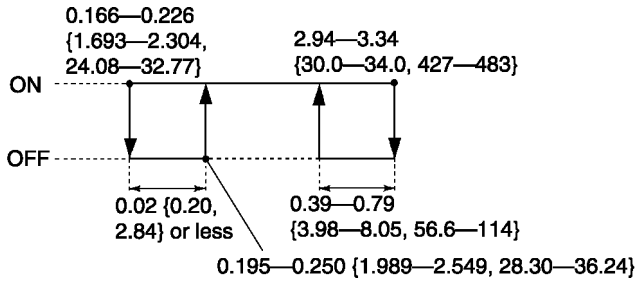
	Type	Triple-pressure: L3 engine, intensely hot area
	Operating pressure (MPa {kgf/cm^2, psi})	• HI and LO pressure switch 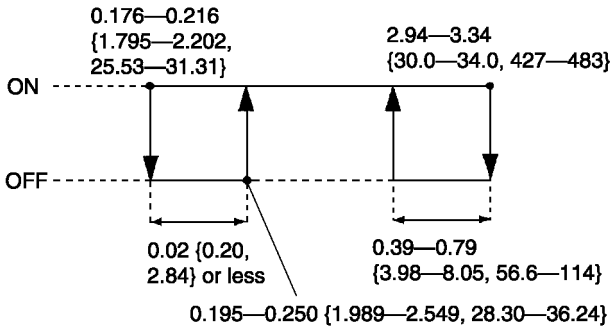 • Middle pressure switch 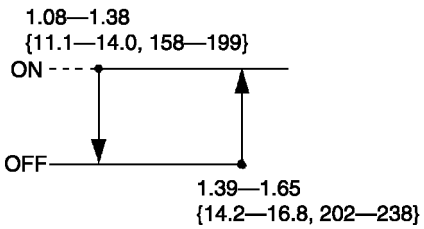
Thermal protector	Type	Bimetallic (Indirect sensing type)
	Operating temperature (°C {°F})	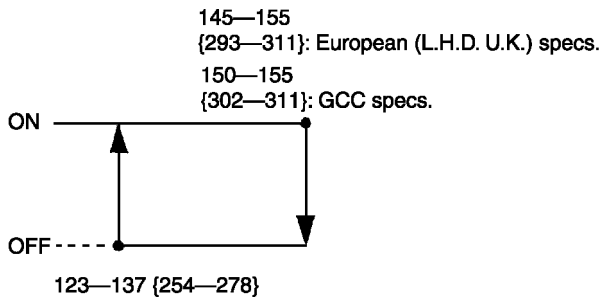
Sensor	Solar radiation sensor	Photodiode
	Ambient temperature sensor	Thermistor
	Cabin temperature sensor	
	Evaporator temperature sensor	
	Water temperature sensor	
Actuator	Air intake actuator	Sliding contact type
	Air mix actuator, airflow mode actuator	Potentiometer type
Temperature control		Reheat full air mix type

U

BASIC SYSTEM

BASIC SYSTEM

A6E851601040T01

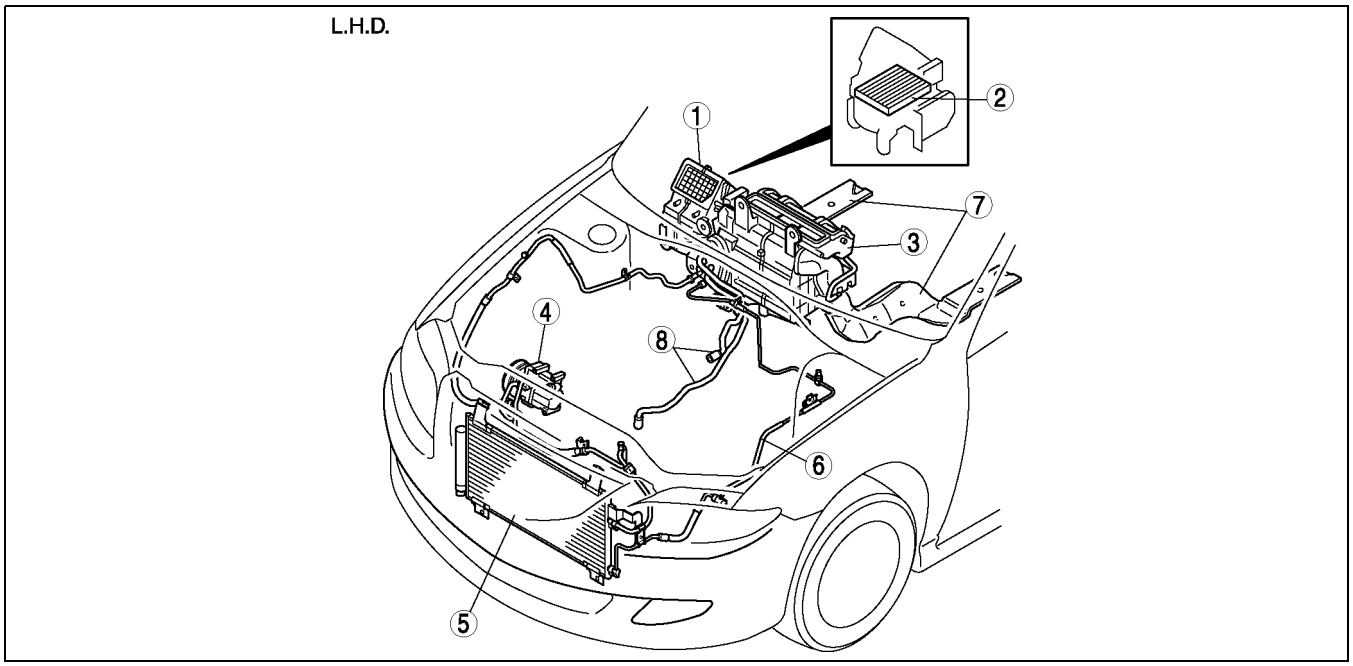

A6E8500T001

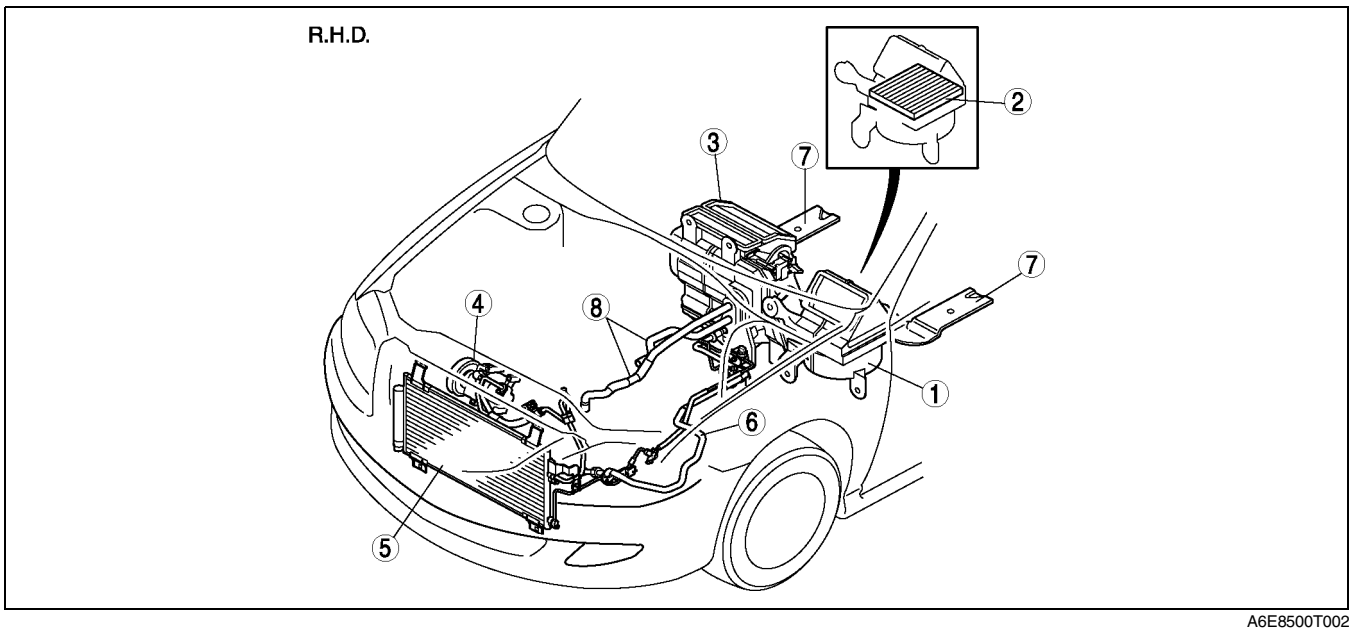

A6E8500T002

1	Blower unit
2	Air filter
3	A/C unit
4	A/C compressor

5	Condenser
6	Refrigerant lines
7	Rear heat duct
8	Heater hose

AIR FILTER

A6E851613988T01

- An air filter that can deodorize and remove pollen and dust have been added.
- The air filter consists of deodorizer surrounded by dust filter.
- The dust filter removes pollen and dust. The deodorizer removes odors containing aldehyde.
- The air filter can not be reused and must be replaced periodically. Even new air filters are gray; be careful not to mistake the gray color as dirt.

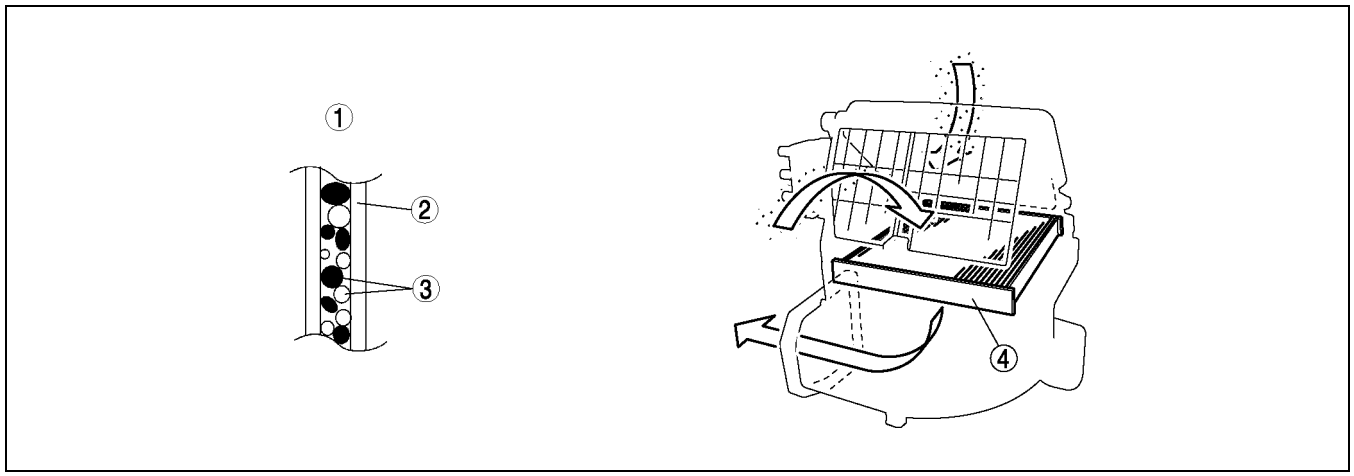

A6E8516T002

1	Profile of air filter
2	Staple fiber

3	Deodorant
4	Air filter

A/C UNIT

A6E851661130T01

- The A/C unit which integrates the cooling and heater units has been adopted.

Air Mix Door Operation

- The air mix door, installed in the A/C unit, controls HOT or COLD position, depending on the position of the temperature control dial. As a result, airflow distribution changes, and the airflow temperature is controlled.

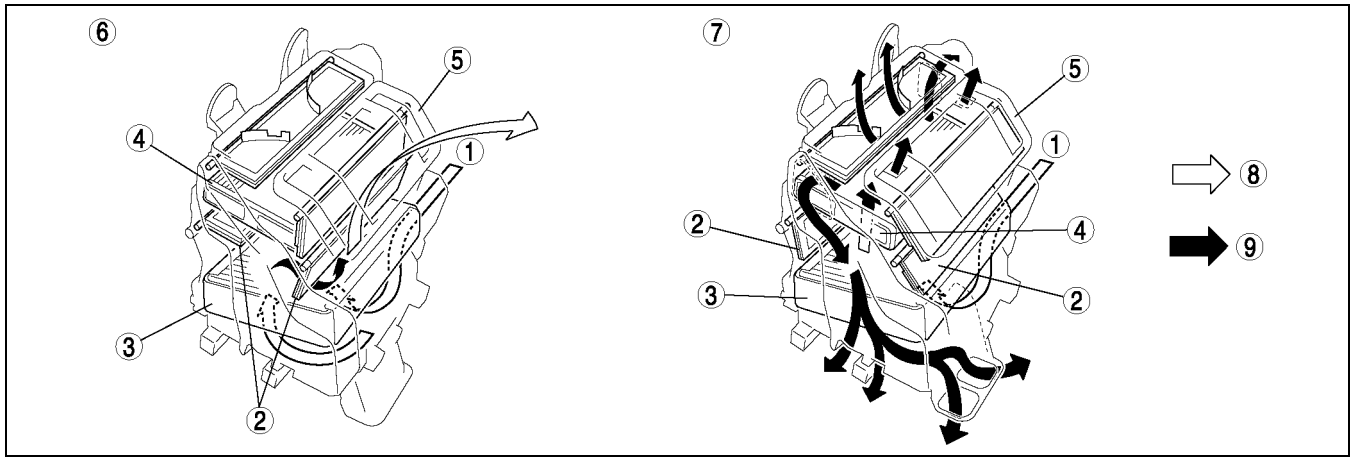

A6E8516T005

1	Airflow
2	Air mix door
3	Evaporator
4	Heater core
5	A/C unit

6	COLD
7	HOT
8	Cold air
9	Warm air

Airflow Mode Door Operation

- The airflow mode doors move to VENT, BI-LEVEL, HEAT, HEAT/DEF, or DEFROSTER position, depending on the position of the airflow mode selector dial. As a result, airflow mode changes.

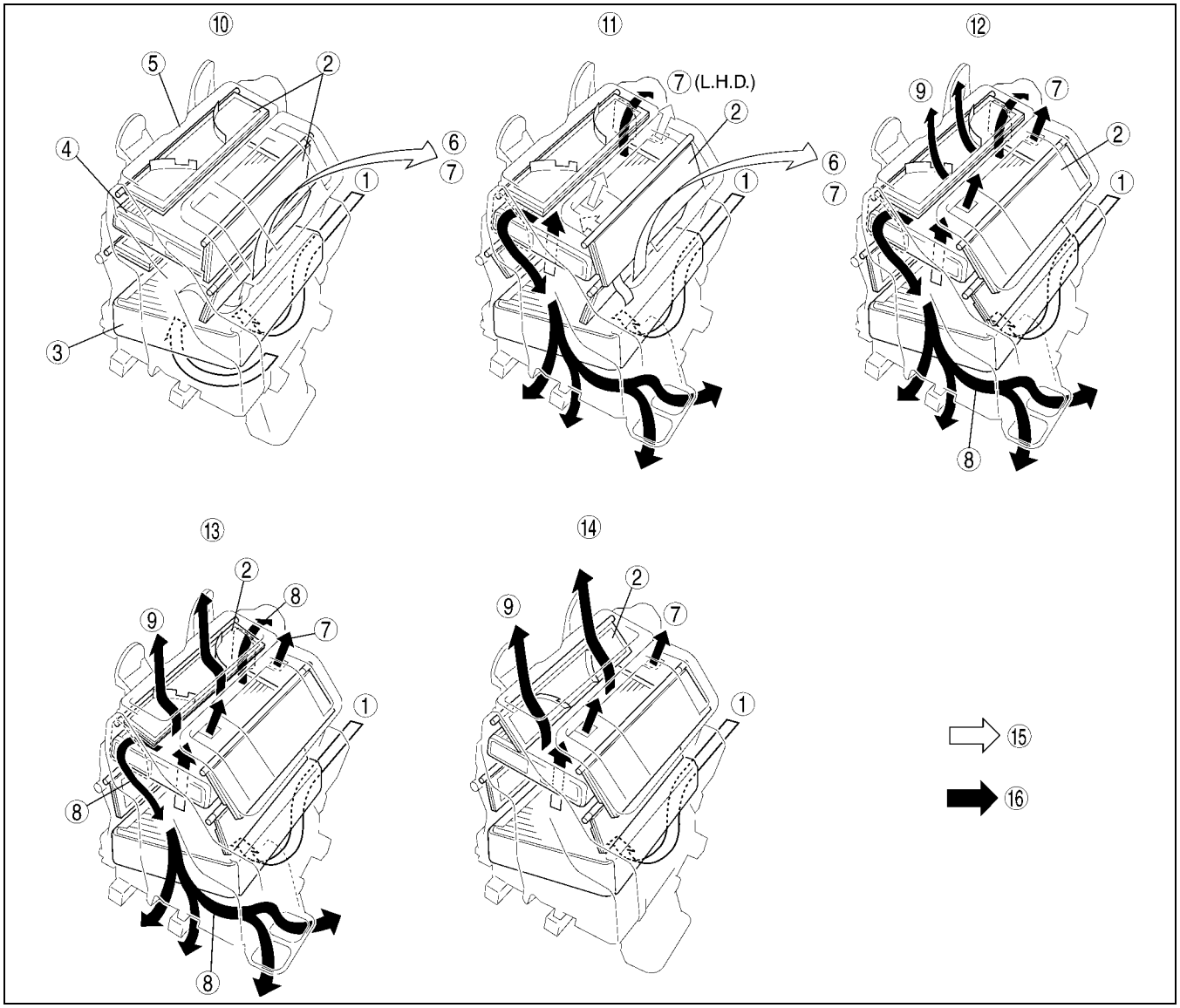

A6E8516T006

1	Airflow
2	Airflow mode door
3	Evaporator
4	Heater core
5	A/C unit
6	To center vent
7	To side vent
8	To front and rear heat

9	To defroster and side demister
10	VENT
11	BI-LEVEL
12	HEAT
13	HEAT/DEF
14	DFROSTER
15	Cold air
16	Warm air

Evaporator

- The double-tank drawn cup is the same as the previous model except that a new refrigerant flow pattern has been adopted. Due to this, size and weight reduction is achieved while maintaining performance.

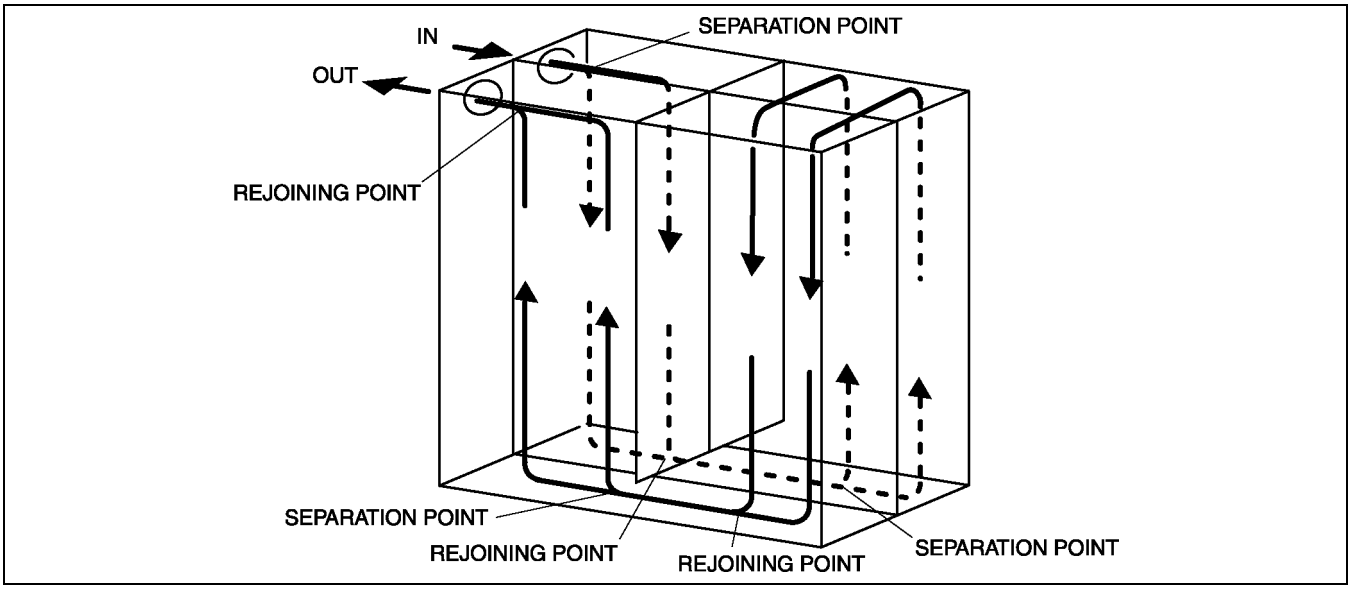

A6E8516T007

Expansion Valve

- The expansion valve causes a sudden decrease in the pressure of the liquid refrigerant. This atomizes the refrigerant, making it easier for the evaporator to vaporize it. The expansion valve also regulates the flow volume of the refrigerant sent to the evaporator.
- The amount of refrigerant delivered to the evaporator is adjusted by the opening angle of the ball valve in the expansion valve.
- Opening angle is adjusted by a balance of the R-134a pressure (Pb) in the diaphragm, and a composite force of evaporator discharge pressure (PI) against the lower part of the diaphragm and spring force (Fs) pushing up the ball valve. When PI increases, the temperature of the temperature sensor near the diaphragm rises and the Pd heated by the R-134a in the diaphragm increases. When the Pd increases more than PI + Fs, the diaphragm is pushed down, and the shaft attached to end of the temperature sensor rod pushes down the ball valve, increasing the amount of liquid refrigerant flow. When the evaporator discharge refrigerant temperature decreases, PI + Fs increases more than Pd, the ball valve is pushed up, and the amount of liquid refrigerant flow decreases.

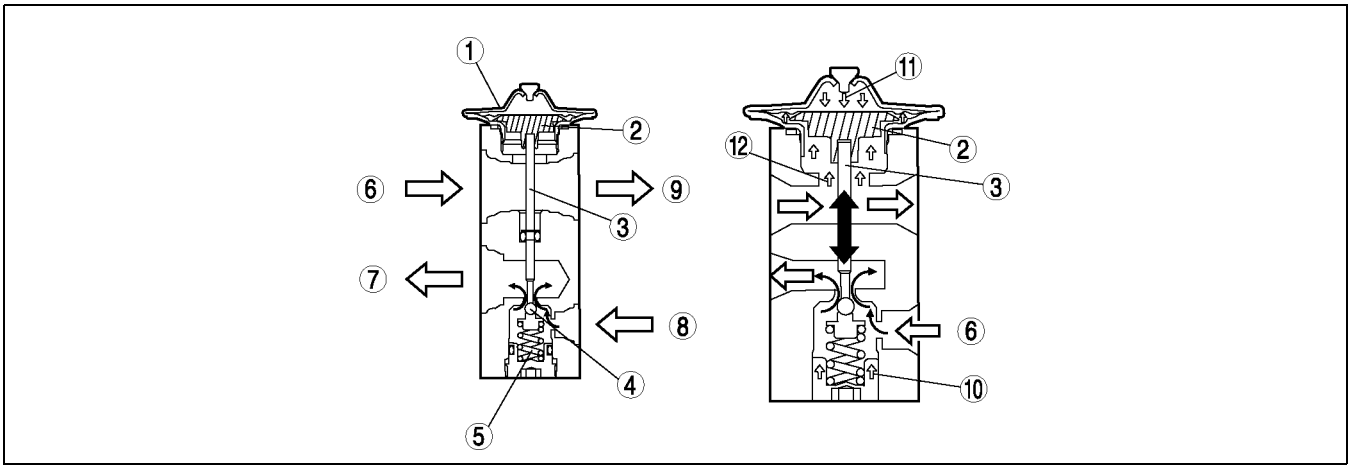

A6E8516T003

1	Diaphragm
2	Temperature sensor
3	Shaft
4	Ball valve
5	Spring
6	From evaporator

7	To evaporator
8	From condenser
9	To condenser
10	Spring force
11	HFC-134a pressure
12	Discharge pressure

CONDENSER

A6E851661480T01

Construction

- A sub cool condenser has been adopted. It is a multi-flow condenser which is equipped with a sub cooling part and integrated with a receiver/drier.
- The sub cool condenser separates liquid-gas refrigerant initially cooled at the condenser via the receiver/drier, where it returns again to the condenser sub cooling part and is cooled, accelerating liquefaction and improving cooling capacity.

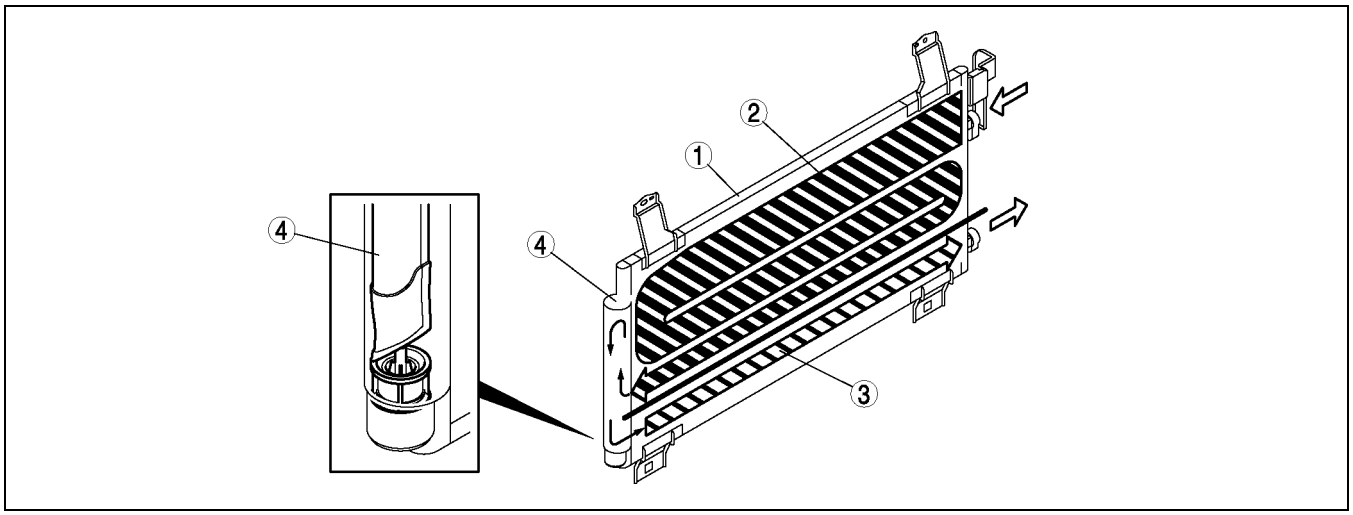

A6E8516T004

1	Condenser
2	Cooling part

3	Sub cooling part
4	Receiver/drier

REFRIGERANT LINES

A6E851661460T01

- Spring-lock coupling is used for pipe-to-pipe connections. As a result, pipes can be connected easily, maintenance of torque is unnecessary, and serviceability is improved.
- There is a garter spring in the cage on the female side (cooler hose (LO) (L.H.D.), cooler pipe No.3, 4 (R.H.D.)) of spring-lock coupling type and the end of the pipe on the male side (A/C unit) is flared. When the pipes are being connected, the flared end of the male side forces the garter spring on the female side to expand, and by fully inserting the male side into the female side, the flared end is locked by the garter spring.
- When the cooler hose (LO) (L.H.D.) or cooler pipe No.3, 4 (R.H.D.) is replaced, the additional indicator ring comes out after connection, indicating that the flared end is locked.

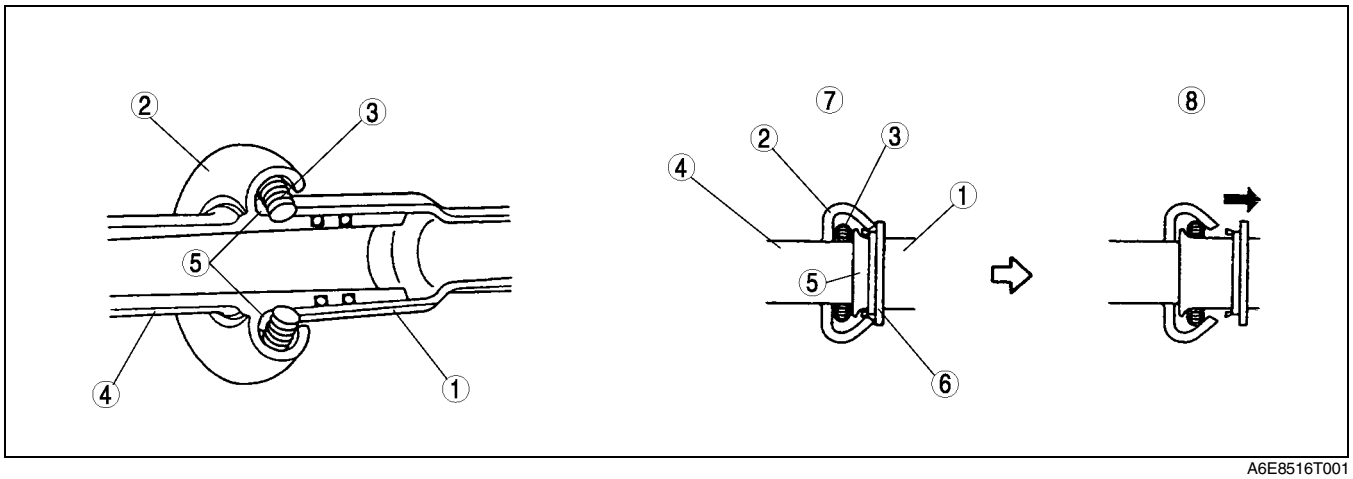

A6E8516T001

1	Female side
2	Cage
3	Garter spring
4	Male side

5	Flared end
6	Indicator ring
7	Unlocked
8	Locked

CONTROL SYSTEM

CONTROL SYSTEM

A6E854001042T10

L.H.D.

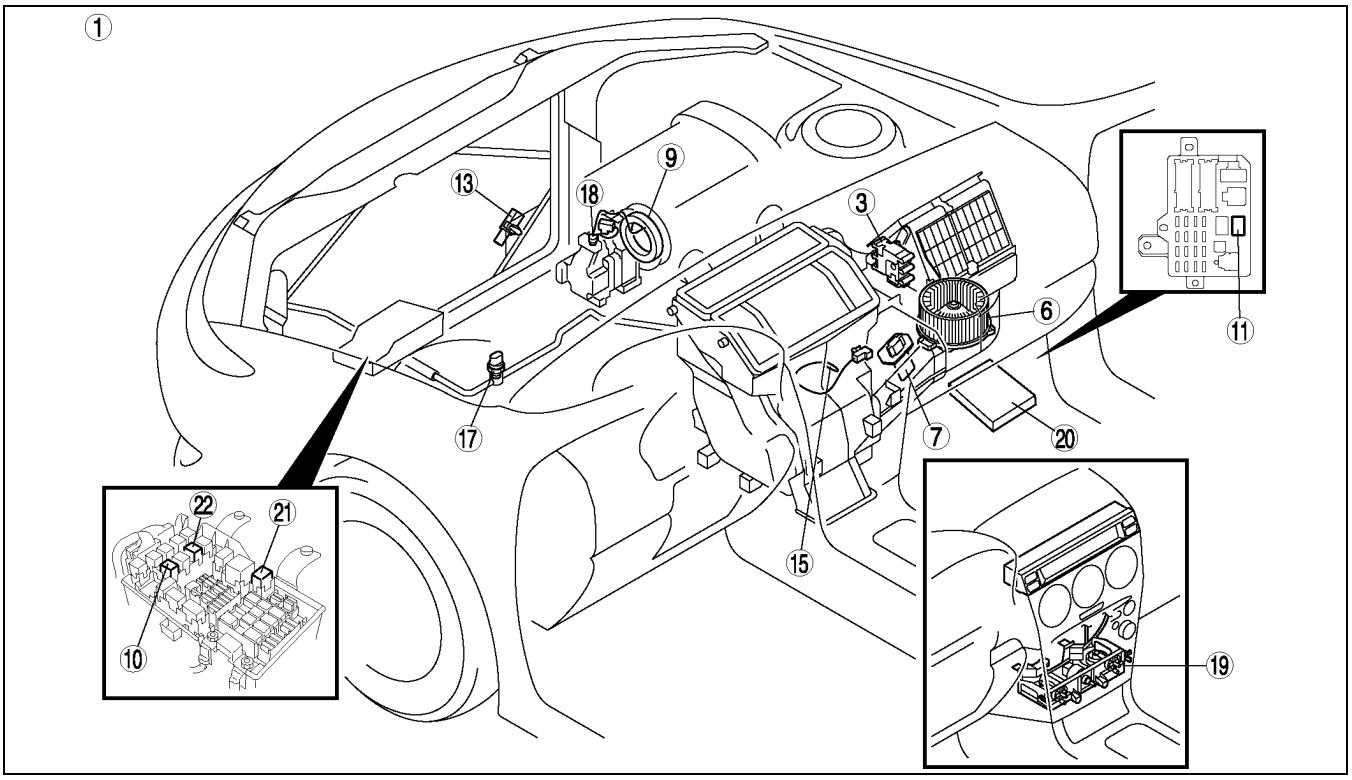

A6E8500T003

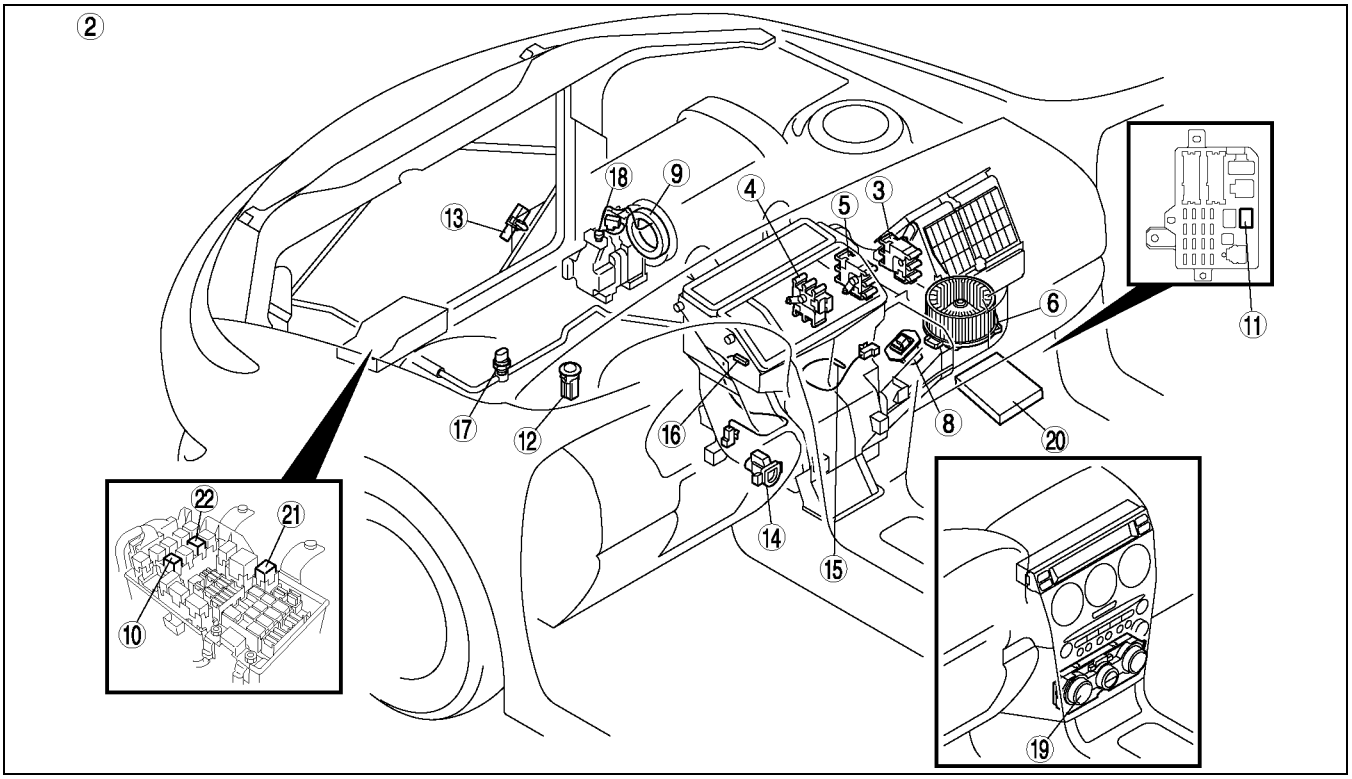

A6E8500T004

U

R.H.D.

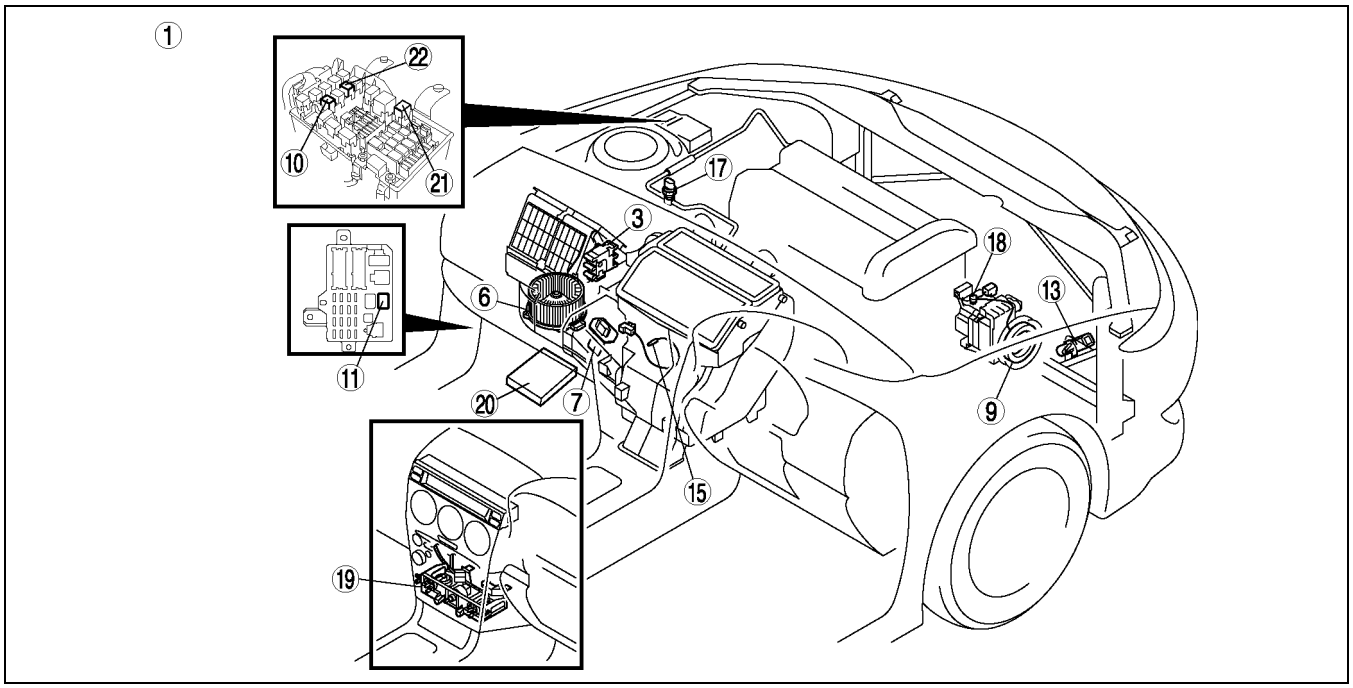

A6E8500T005

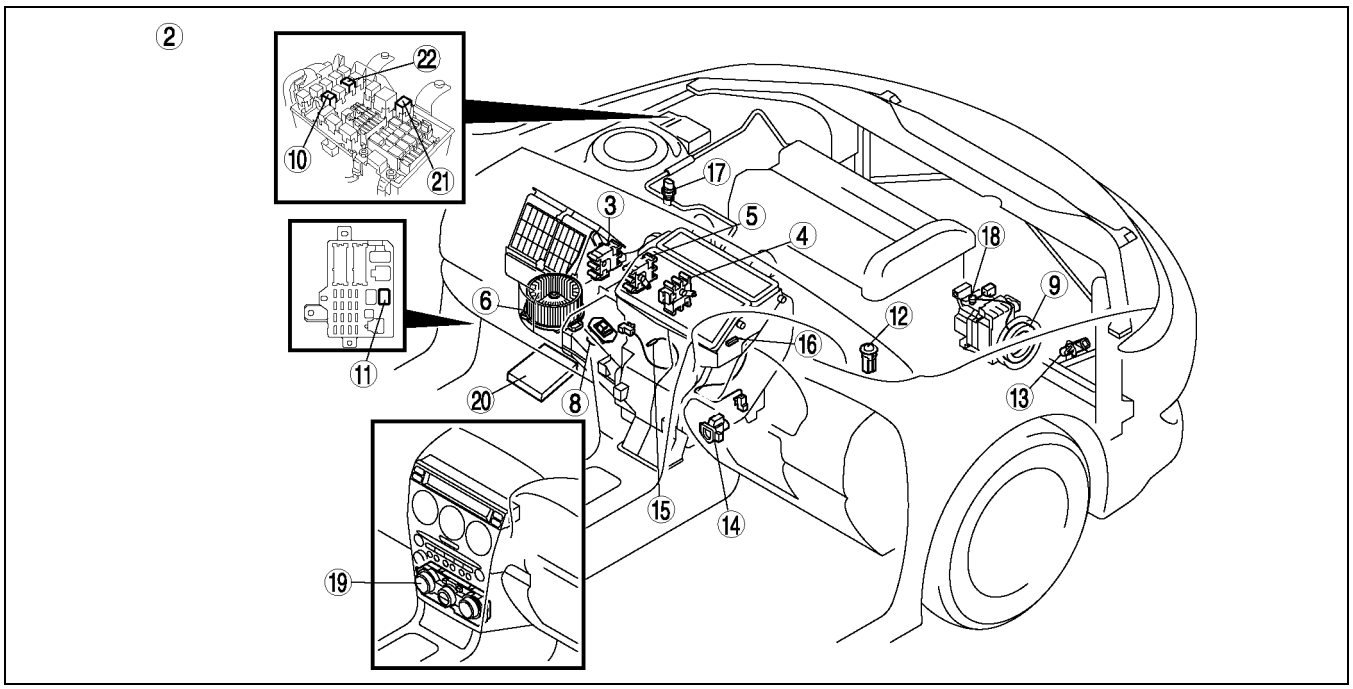

A6E8500T006

1	Manual air conditioner
2	Full-auto air conditioner
3	Air intake actuator
4	Air mix actuator
5	Airflow mode actuator
6	Blower motor
7	Resister
8	Power MOS FET
9	Magnetic clutch
10	A/C relay
11	Blower relay

12	Solar radiation sensor
13	Ambient temperature sensor
14	Cabin temperature sensor
15	Evaporator temperature sensor
16	Water temperature sensor
17	Refrigerant pressure switch
18	Thermal protector
19	Climate control unit
20	PCM
21	TNS relay
22	Rear window defroster relay

CLIMATE CONTROL UNIT

A6E854061190T01

Manual Air Conditioner

- A wire-type climate control unit is used with the manual air conditioner.
- The airflow mode selector dial, temperature control dial, fan switch have been enlarged to improve ease of operation.
- The A/C, REC/FRESH and rear defroster switches equipped in the current climate control unit have been relocated to the center panel.

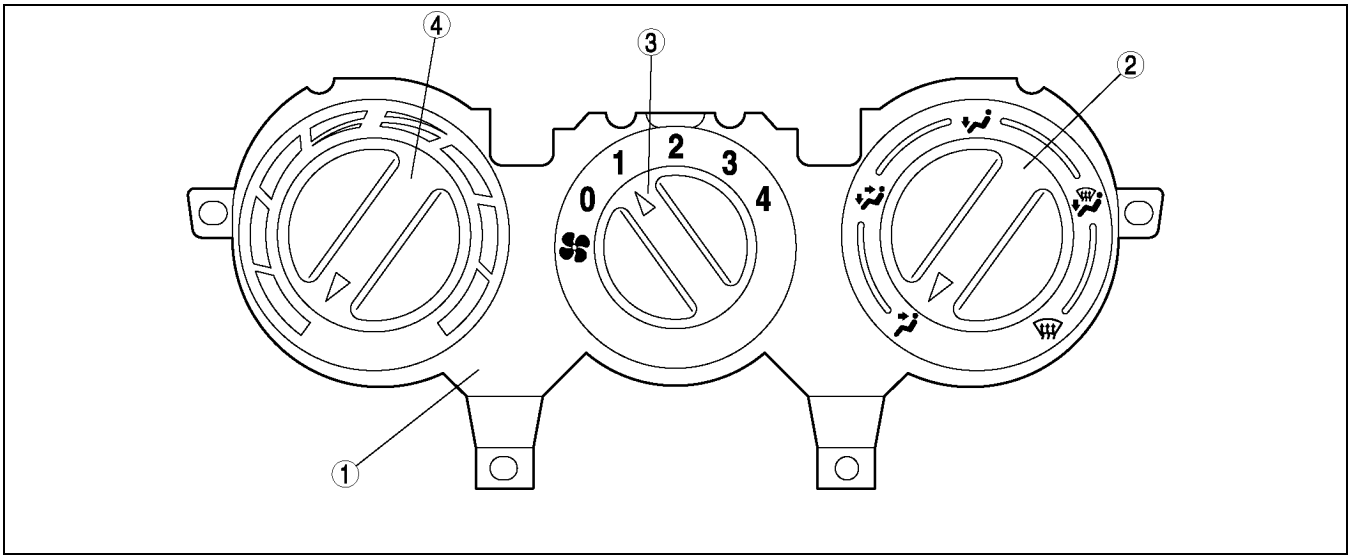

A6E8540T035

1	Climate control unit
2	Airflow mode selector dial

3	fan switch
4	Temperature control dial

- A defroster switch into the climate control unit detects when the airflow mode selector dial is turned to DEFROSTER position. When the defroster switch turned on, the center panel starts defroster control. (See U–17 Defroster Control.)

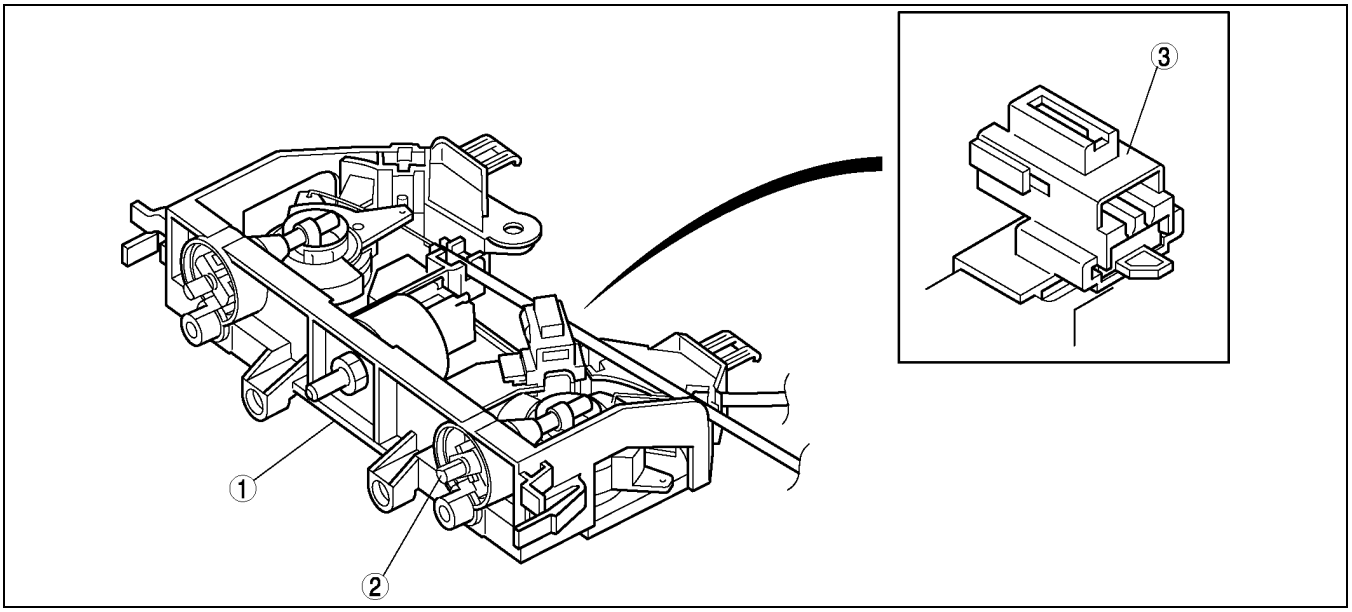

A6E8540T036

1	Climate control unit
2	Airflow mode selector dial

3	Defroster switch

Full-auto Air Conditioner

- A logic-type climate control unit is used with the full-auto air conditioner.
- The airflow mode selector dial, temperature setting dial, fan switch have been enlarged to improve ease of operation.
- The A/C, REC/FRESH and rear defroster switches equipped in the current climate control unit have been relocated to the center panel.

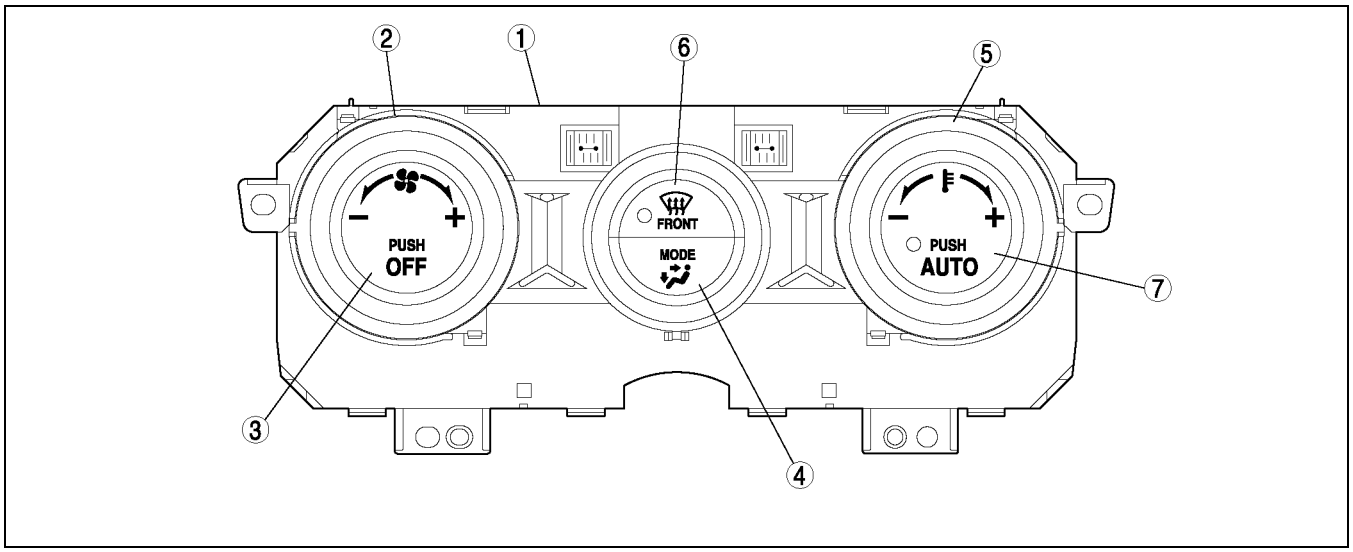

A6E8540T037

1	Climate control unit
2	Fan switch
3	OFF switch
4	MODE switch

5	Temperature setting dial
6	Defroster switch
7	AUTO switch

- Information about the operating condition of the system is displayed on the information display.

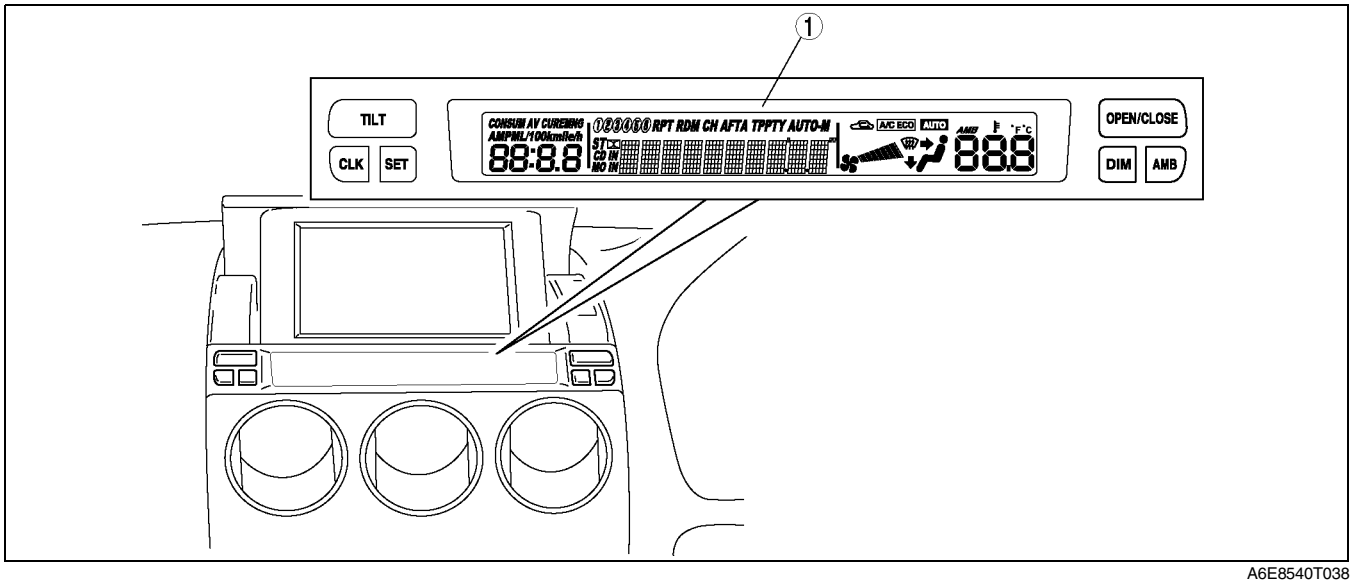

A6E8540T038

1	Information display

MANUAL AIR CONDITIONER CONTROL SYSTEM

A6E854001081T01

Block Diagram

- The climate control unit carries out the defroster control base on signal sent from the airflow mode selector dial, and sends an operating signal to the air intake actuator.
- The center panel sends an A/C signal to the PCM via the refrigerant pressure switch based on signals sent from the A/C switch, fan switch and evaporator temperature sensor.
- The PCM sends operating signals to the A/C relay and IAC valve based on A/C signal and vehicle signal.

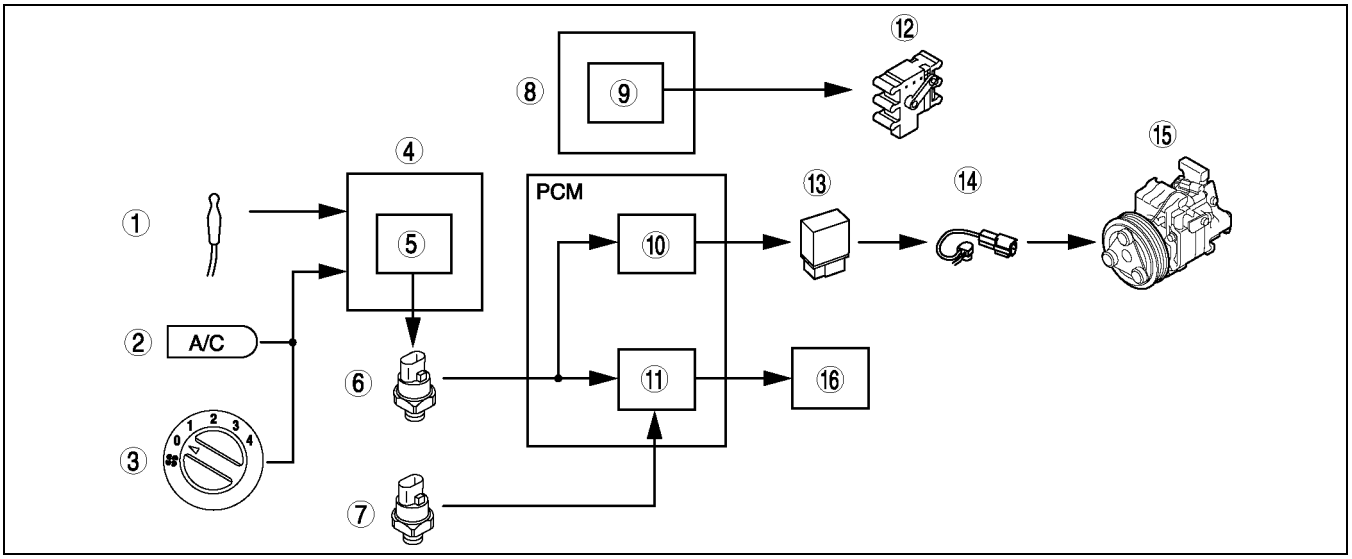

A6E8540T048

1	Evaporator temperature sensor
2	A/C switch
3	Fan switch
4	Center panel
5	A/C compressor control
6	Refrigerant pressure switch (HI and LO pressure)
7	Refrigerant pressure switch (middle pressure) (L3 engine only)
8	Climate control unit

9	Defroster control
10	A/C cut-off control
11	Idle air control
12	Air intake actuator
13	A/C relay
14	Thermal protector
15	Magnetic clutch
16	IAC valve

U

System Wiring Diagram

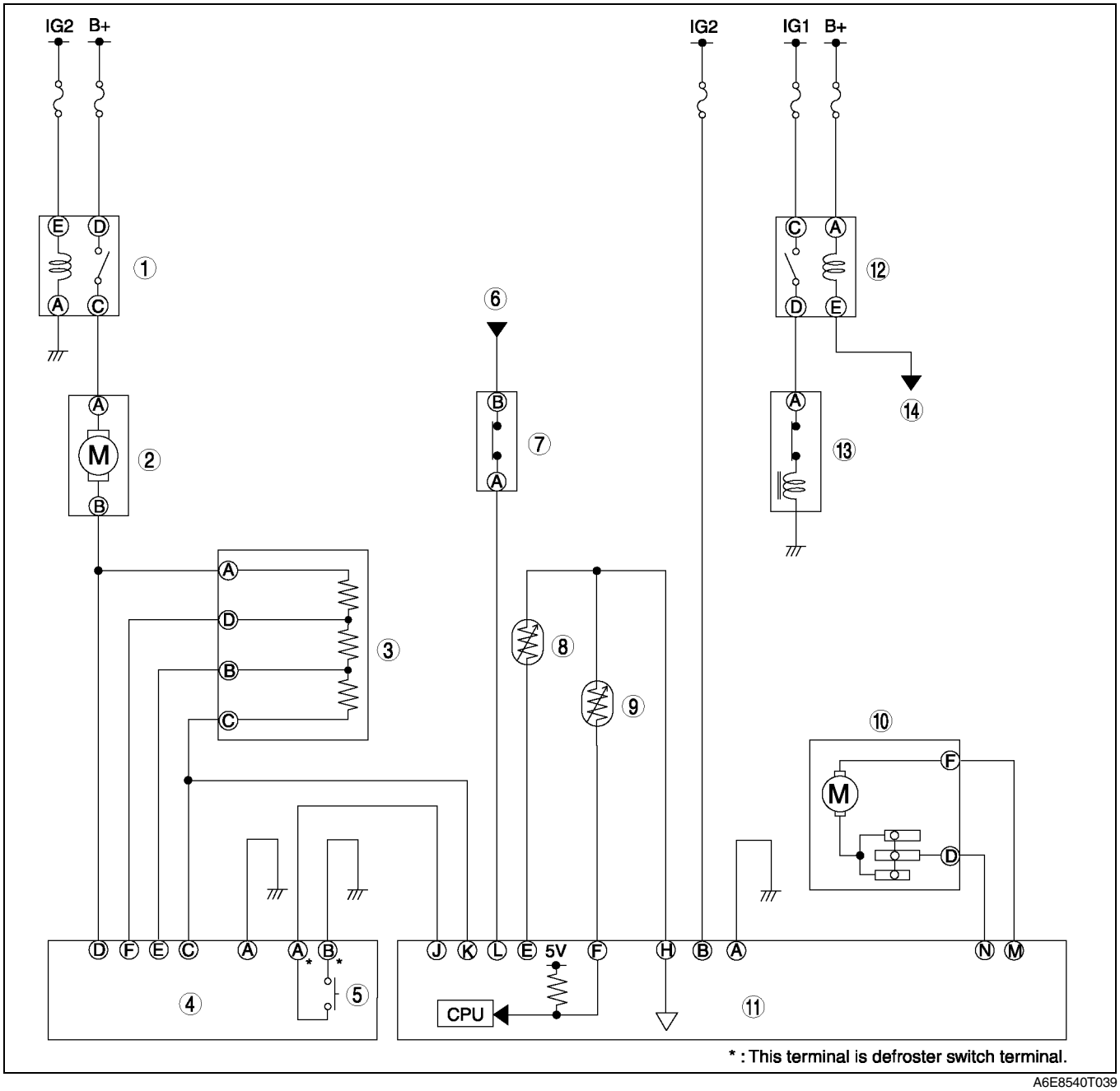

A6E8540T039

1	Blower relay
2	Blower motor
3	Resistor
4	Climate control unit
5	Defroster switch
6	From PCM
7	Refrigerant pressure switch

8	Ambient temperature sensor
9	Evaporator temperature sensor
10	Air intake actuator
11	Center panel
12	A/C relay
13	Magnetic clutch
14	To PCM

Outline of Control System

- Manual air conditioner defroster control and A/C compressor control.

Control name	Control part
Defroster control	Climate control unit
A/C compressor control	Center panel

Defroster Control

1. When the airflow mode selector dial is turned to DEFROSTER position, a wire moves the airflow mode main link, turning the airflow mode to DEFROSTER.
2. The defroster switch turns on at the same time, and the CPU sends a signal to turn the air intake mode to FRESH.
3. The air intake actuator operates and turns the air intake mode to FRESH.

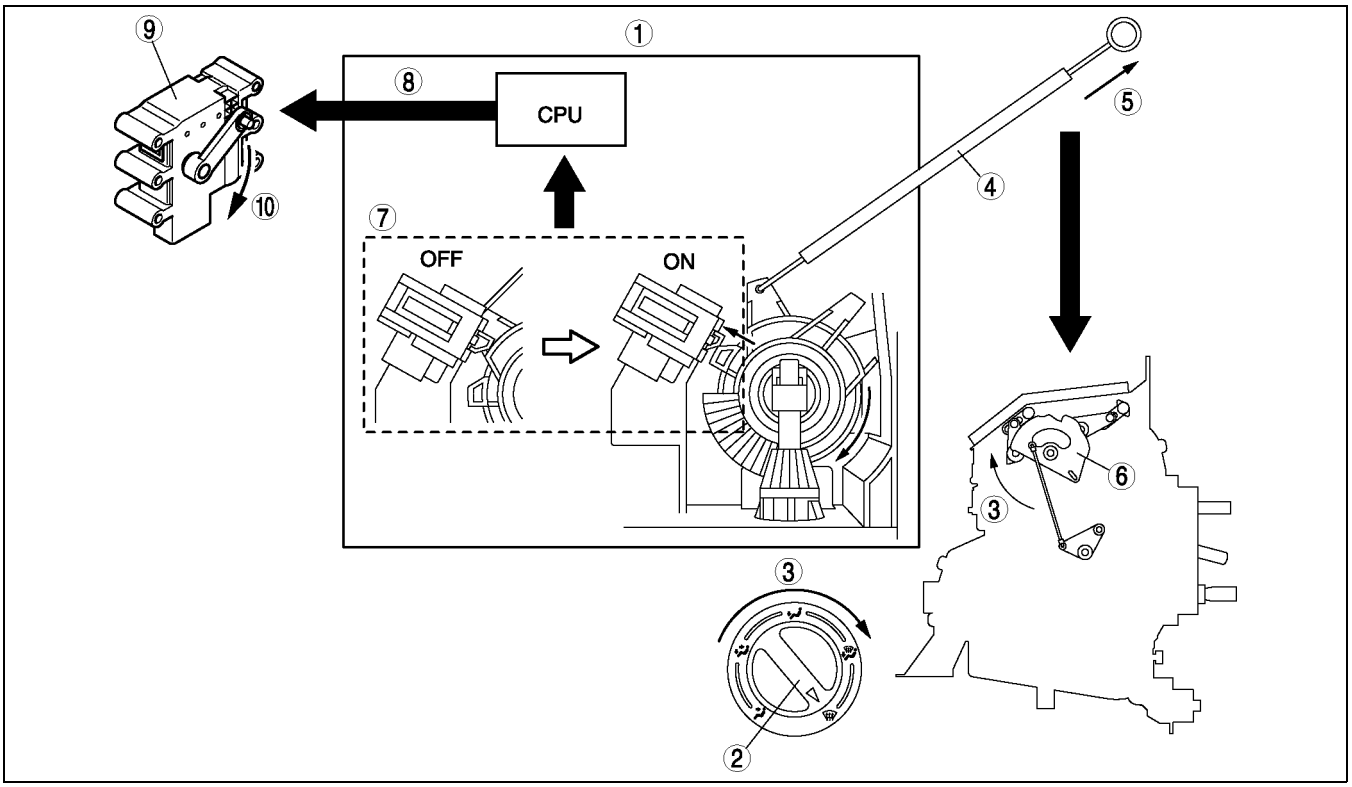

A6E8540T034

1	Climate control unit
2	Airflow mode selector dial
3	DEFROSTER
4	Wire
5	Move

6	Airflow mode main link
7	Defroster switch
8	FRESH signal
9	Air intake actuator
10	FRESH

X: Operates
–: Does not operate

Airflow mode	Air intake mode (REC/FRESH switch pushed)	Defroster control
VENT	REC ⇔ FRESH	–
BI-LEVEL	REC ⇔ FRESH	–
HEAT	REC ⇔ FRESH	–
HEAT/DEF	REC ⇔ FRESH	–
DEFROSTER	FRESH	x

A/C Compressor Control

- The center panel sends an A/C signal to the PCM via the refrigerant pressure switch based on signals sent from the A/C switch, fan switch and evaporator temperature sensor.
- The PCM controls the A/C relay and IAC valve based on the input signal from the center panel.

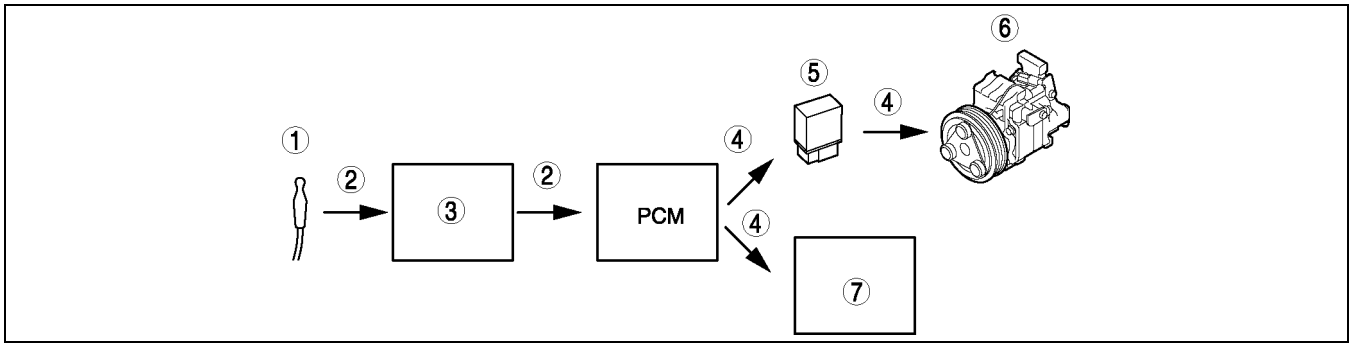

A6E8540T049

1	Evaporator temperature sensor
2	A/C signal
3	Center panel
4	Output

5	A/C relay
6	Magnetic clutch
7	IAC valve

A/C signal on/off control

- The center panel turns the A/C signal (magnetic clutch) on and off based on the temperature of the air passing through the evaporator when the A/C and fan switches are on. This keeps the evaporator surface temperature within the specified range, preventing the evaporator from freezing while the fan switch and A/C switch are turned on.

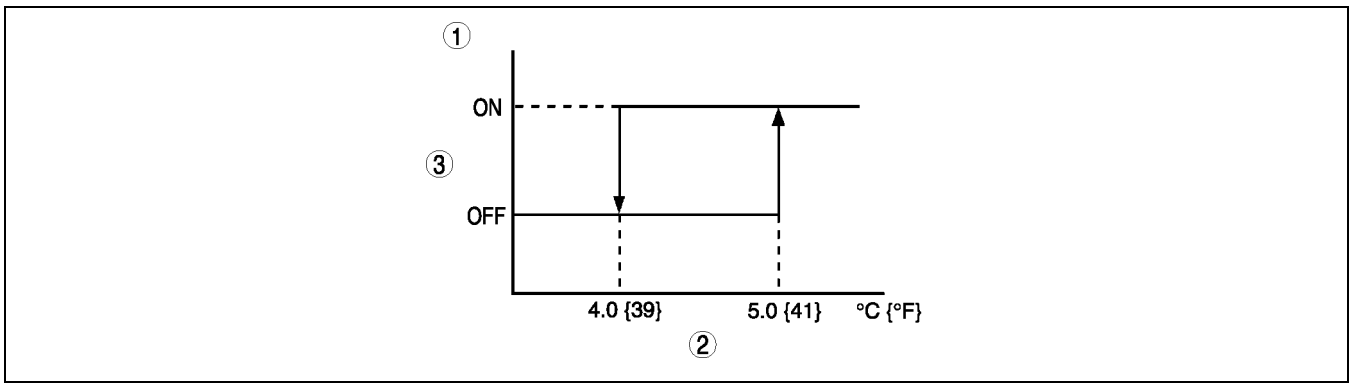

A6E8540T047

1	A/C signal on/off decision
2	Evaporator temperature sensor

3	A/C signal

FULL-AUTO AIR CONDITIONER CONTROL SYSTEM

A6E854001044T01

Block Diagram

- The control system consists of input components (sensors), output components (actuators, magnetic clutch, power MOS FET, and other parts), and a control device (climate control unit).

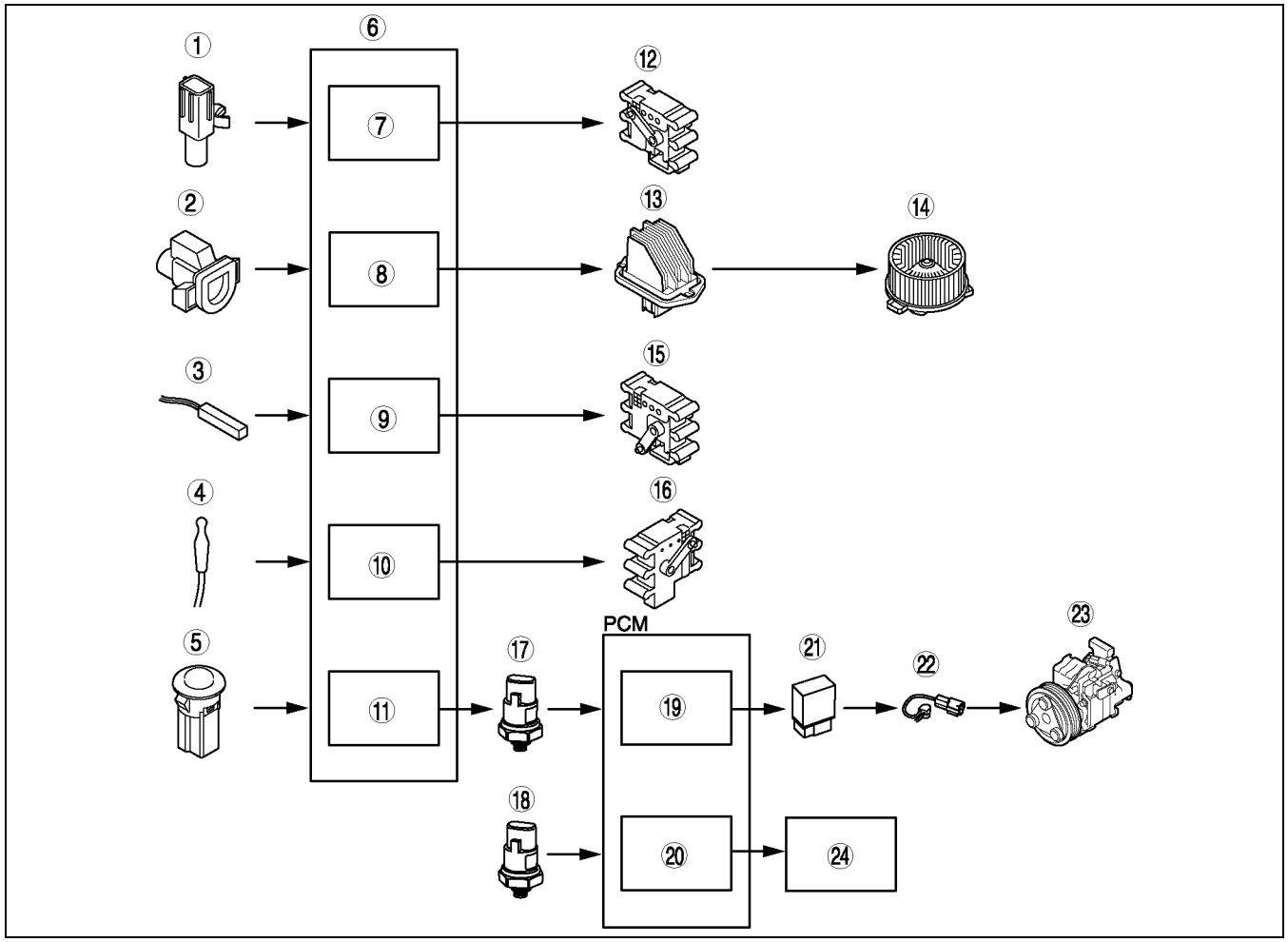

A6E8540T050

1	Ambient temperature sensor
2	Cabin temperature sensor
3	Water temperature sensor
4	Evaporator temperature sensor
5	Solar radiation sensor
6	Climate control unit
7	Airflow temperature control
8	Airflow volume control
9	Airflow mode control
10	Air intake control
11	A/C compressor control
12	Air mix actuator

13	Power MOS FET
14	Blower motor
15	Airflow mode actuator
16	Air intake actuator
17	Refrigerant pressure switch (HI and LO pressure)
18	Refrigerant pressure switch (middle pressure) (L3 engine only)
19	A/C cut control
20	Idle speed control
21	A/C relay
22	Thermal protector
23	Magnetic clutch
24	IAC valve

System Wiring Diagram

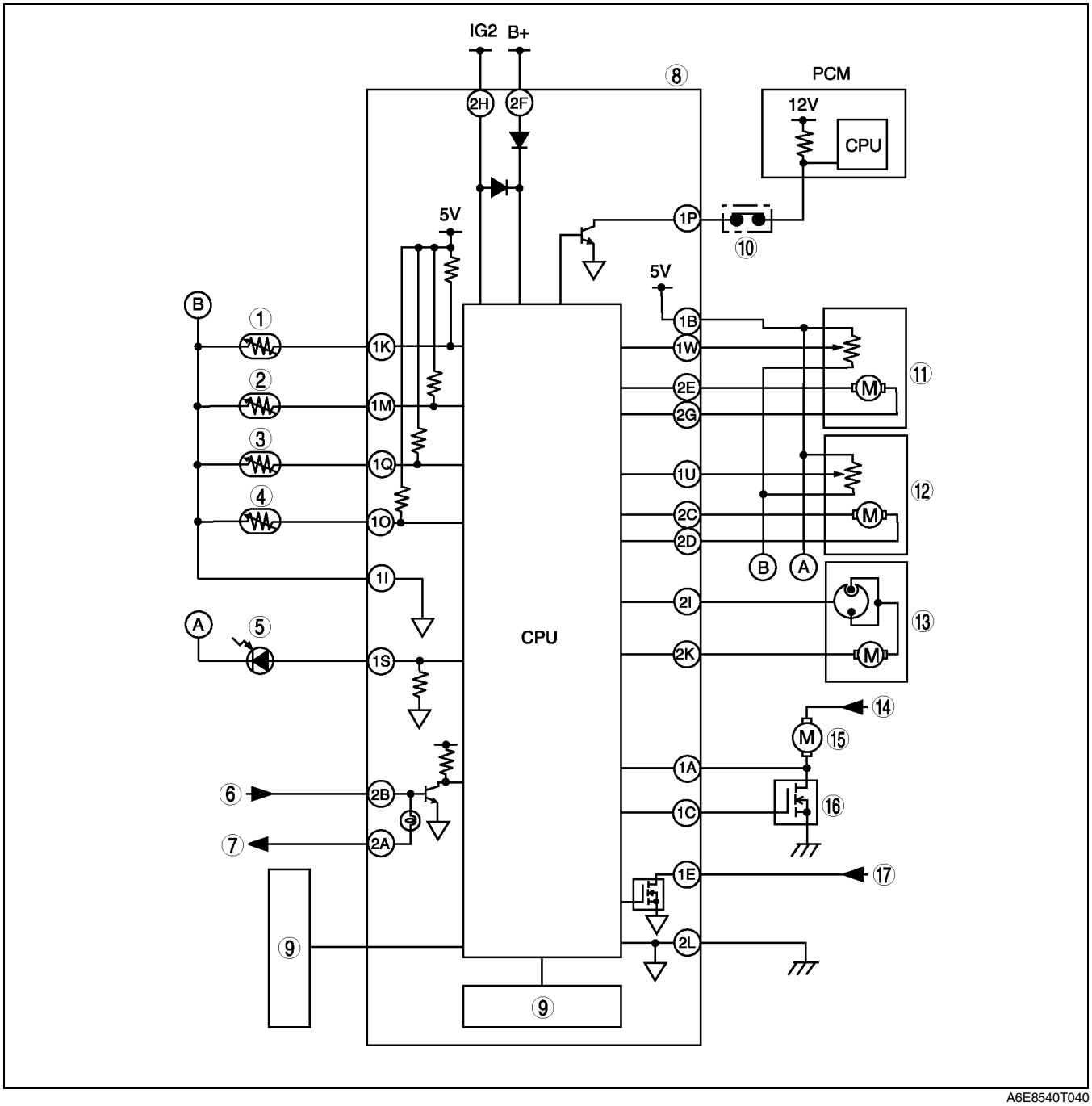

A6E8540T040

1	Ambient temperature sensor
2	Cabin temperature sensor
3	Evaporator temperature sensor
4	Water temperature sensor
5	Solar radiation sensor
6	From TNS relay
7	Panel light control
8	Climate control unit
9	Each switch

10	Refrigerant pressure switch
11	Airflow mode actuator
12	Air mix actuator
13	Air intake actuator
14	From blower relay
15	Blower motor
16	Power MOS FET
17	From rear window defroster relay

Outline of Control System

- In the full-auto air conditioner system, the climate control unit carries out five basic types of controls based on signals from various sensors and control signals from the climate control unit. The climate control unit also has three supplementary functions.

Basic control	Control description	Correction
Airflow temperature control	Airflow temperature automatic control	• Air intake correction • A/C correction • MAX HOT and MAX COLD correction • Coolant temperature correction • Fail-safe function
Airflow volume control	Airflow volume automatic control	• Coolant temperature correction (warm-up correction) • Mild start correction • MAX HOT and MAX COLD correction • Windshield mist prevention correction • Start compensation correction • Defroster correction • Fail-safe function
	Airflow volume manual control	• Defroster correction • Fail-safe function
Airflow mode control	Airflow mode automatic control	• Ambient temperature correction (European (L.H.D. U.K.) specs.) • Coolant temperature correction • Fail-safe function
	Airflow mode manual control	• Fail-safe function
Air intake control	Air intake automatic control	• MAX COLD correction • Defroster correction • Ambient temperature correction • A/C OFF correction
	Air intake manual control	• Defroster correction
A/C compressor control	A/C compressor automatic control	• Defroster correction • Ambient temperature correction • Windshield mist prevention correction • MAX COLD correction
	A/C compressor manual control	• Defroster correction • Ambient temperature correction • Windshield mist prevention correction

Supplementary function
Sensor fail-safe function
Sensor signal delay function
On-board diagnostic function

Control Transition
Air mix, airflow volume control

Operation switch		Air mix control	Airflow volume control								
		Control before switched	Control before switched								
		Automatic control	Automatic control	Defroster correction	Manual control						
					OFF	1	2	3	4	5	6	7
OFF switch		AUTO	OFF	OFF	OFF							
AUTO switch		AUTO	AUTO	AUTO	AUTO							
Fan switch	+	AUTO	MANUAL[*2]	MANUAL[*2]	1	2	3	4	5	6	7	7
	–	AUTO	MANUAL[*3]	MANUAL[*3]	1	1	1	2	3	4	5	6
MODE switch		AUTO	AUTO	[*5]	No change							
DEFROSTER switch		AUTO	Defroster correction	[*5]	Defroster correction							
A/C switch		AUTO	AUTO	No change	No change							
REC/FRESH switch		AUTO	AUTO	No change	No change							
Temperature setting dial[*1]	15.0 (18.0)	MAX COLD	MAX HI	MAX HI	No change							
	15.5—28.5 (18.5—31.5)	AUTO	AUTO	No change	No change							
	29.0 (32.0)	MAX HOT	AUTO HI[*4]	AUTO HI	No change							

( ) : GCC specs.
[*1] : Setting temperature fluctuates up or down in increments of 0.5, within the range of 15.0 to 29.0 (European (L.H.D. U.K.) specs.) or 18.0 to 32.0 (GCC specs.). When the fan is OFF, the setting temperature can be adjusted in the range of ±1.0.
[*2] : Goes up to the closest manual voltage to auto voltage or defroster correction voltage.
[*3] : Goes down to the closest manual voltage to auto voltage or defroster correction voltage.
[*4] : Coolant temperature correction takes precedence.
[*5] : Returns to condition prior to defroster operation. However, if it is off prior to defroster operation, it switches to automatic control.

Airflow mode control, air intake control, A/C compressor control

Operation switch		Airflow mode control		Air intake control		A/C compressor control	
		Control before switched		Control before switched		Control before switched	
		Automatic control	Manual control	Automatic control	Manual control	Automatic control	Manual control
OFF switch		Condition before OFF switch ON[*2]	No change[*2]	Condition before OFF switch ON[*2]	No change[*2]	OFF	OFF
AUTO switch		AUTO	AUTO	AUTO	AUTO	AUTO	AUTO
Fan switch	+	AUTO	No change	AUTO	No change	AUTO	No change
	–	AUTO	No change	AUTO	No change	AUTO	No change
MODE switch		VENT→BI-LEVEL BI-LEVEL→HEAT HEAT→HEAT/DEF HEAT/DEF→VENT DEFROSTER→HEAT	VENT→BI-LEVEL BI-LEVEL→HEAT HEAT→HEAT/DEF HEAT/DEF→VENT DEFROSTER→HEAT	AUTO	No change[*2]	AUTO	No change[*3]
DEFROSTER switch		DEFROSTER[*2]	DEFROSTER[*2]	DEFROSTER correction[*2]	DEFROSTER correction[*2]	DEFROSTER correction[*3]	DEFROSTER correction[*3]
A/C switch		AUTO	No change	AUTO	No change	A/C→ECO ECO→A/C OFF→A/C[*4]	A/C→ECO ECO→A/C OFF→A/C[*4]
REC/FRESH switch		AUTO	No change	FRESH→REC REC→FRESH	FRESH→REC REC→FRESH	AUTO	No change

Operation switch		Airflow mode control		Air intake control		A/C compressor control	
		Control before switched		Control before switched		Control before switched	
		Automatic control	Manual control	Automatic control	Manual control	Automatic control	Manual control
Temperature setting dial*1	15.0 (18.0)	AUTO	No change	AUTO	No change	AUTO	No change
	15.5—28.5 (18.5—31.5)						
	29.0 (32.0)						

( ) : GCC specs.
*1 : Setting temperature fluctuates up or down in increments of 0.5, within the range of 15.0 to 29.0 (European (L.H.D. U.K.) specs.) or 18.0 to 32.0 (GCC specs.). When the fan is OFF, the setting temperature can be adjusted in the range of ±1.0.
*2 : If operated when in defroster correction, it returns to the condition prior to defroster operation.
*3 : Ambient temperature correction takes precedence. If operated when in defroster correction, it returns to the condition prior to defroster operation. However, if it is off prior to defroster operation, it switches to automatic control.
*4 : Ambient temperature correction takes precedence. When the fan is OFF, the A/C is fixed at off.

AIRFLOW TEMPERATURE CONTROL

A6E854001044T04

- Airflow temperature is controlled by the air mix actuator so that the passenger compartment temperature remains at the target temperature (control computation value T1).
- Control computation value T1 is the target temperature in the cabin set by the climate control unit based on differences among set temperature, input temperature from the sensors, and sunlight intensity.

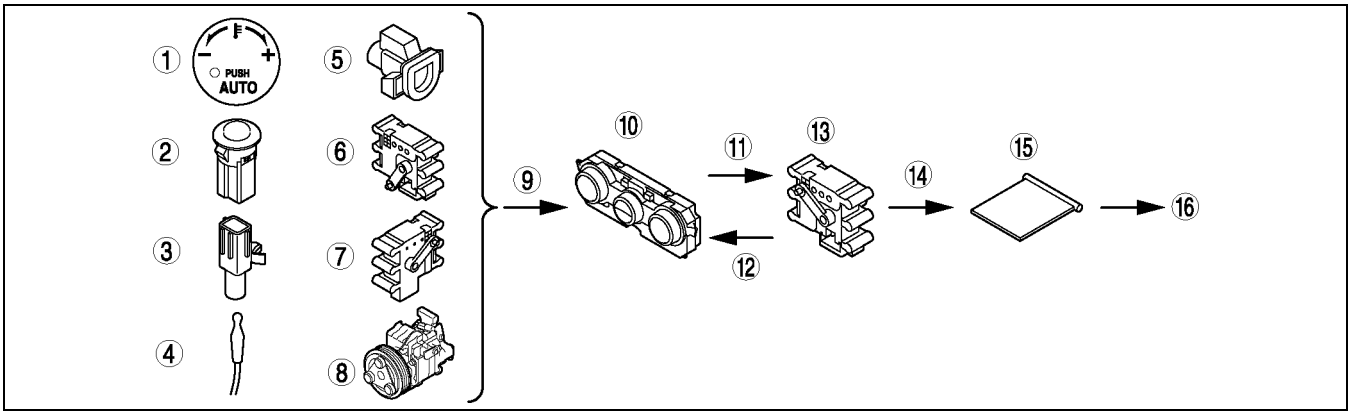

A6E8540T041

1	Set temperature	9	Signals
2	Sunlight intensity	10	Climate control unit
3	Ambient temperature	11	Output
4	Evaporator temperature	12	Feedback
5	Cabin temperature	13	Air mix actuator
6	Airflow mode	14	Operation
7	Air intake mode	15	Air mix doors
8	A/C compressor control condition	16	Airflow temperature changes

Airflow Temperature Automatic Control

- Based on the set temperature and sunlight intensity, the climate control unit calculates the air mix actuator opening angle characteristic. The higher the sunlight intensity, the lower the air mix actuator opening angle characteristic.
- The climate control unit compares the air mix actuator opening angle characteristic, the present ambient temperature and target temperature (control computation value T1) and determines a basic angle of opening for the air mix actuator.

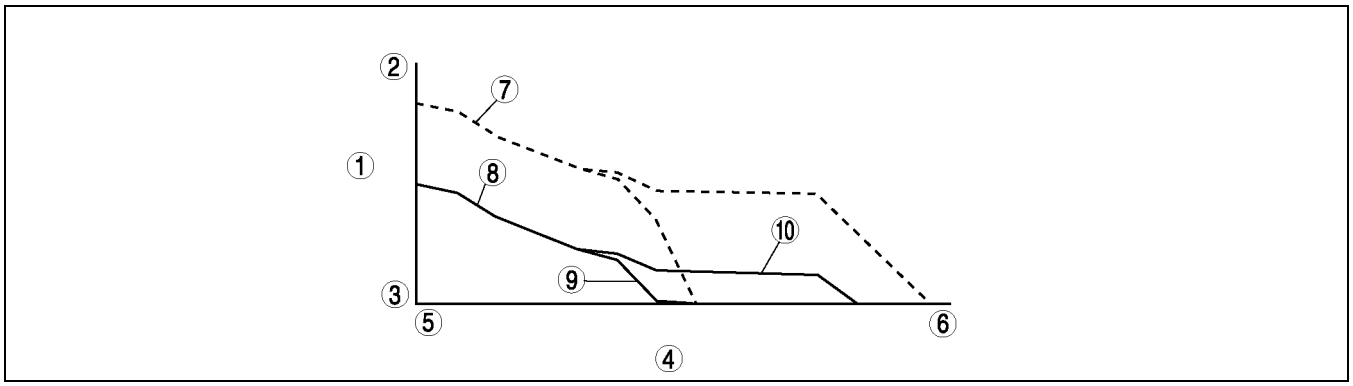

A6E8540T042

1	Air mix actuator basic opening
2	MAX HOT
3	MAX COLD
4	Ambient temperature
5	Low
6	High

7	When the sunlight intensity is low
8	When the sunlight intensity is high
9	Air mix actuator opening angle characteristic (A/C off mode)
10	Air mix actuator opening angle characteristic (A/C on mode)

Correction

Air intake correction

- When the A/C mode is off, the air mix actuator opening angle is corrected to prevent airflow temperature rise when the air intake mode is switched from fresh air to recirculated air. In addition, this correction retards the air mix actuator operation to prevent a sudden drop in airflow temperature.

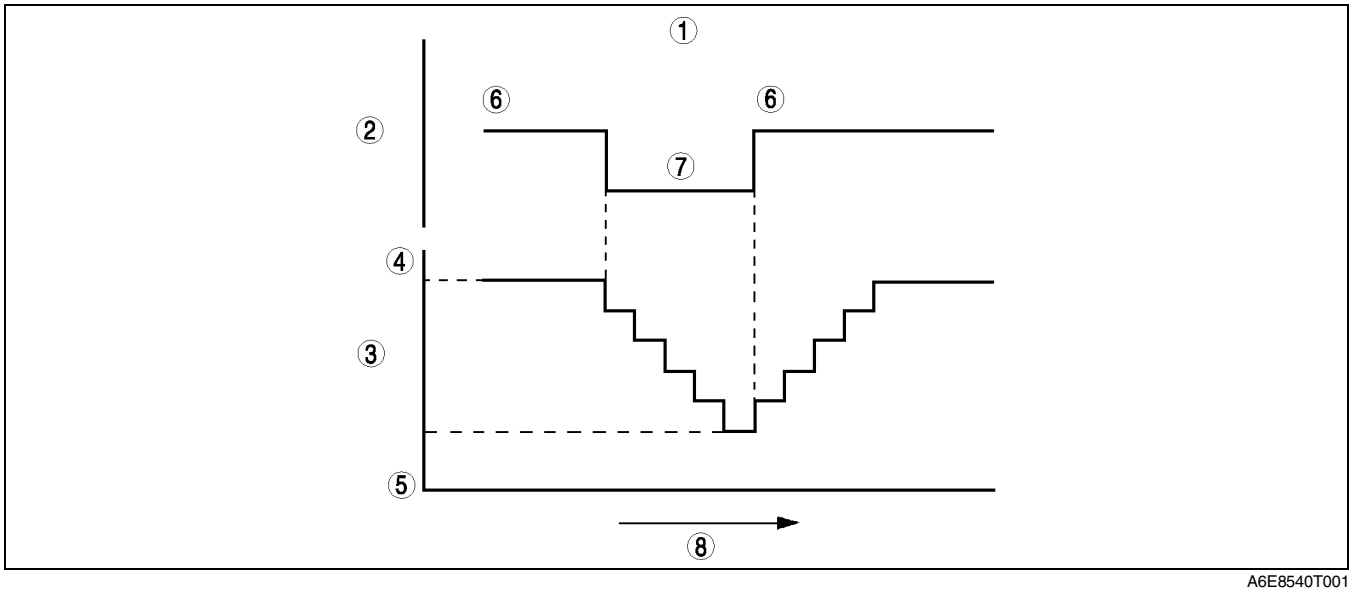

A6E8540T001

1	Air mix actuator opening angle delay
2	Air intake mode
3	Air mix actuator opening angle correction amount
4	HOT

5	COLD
6	FRESH
7	RECIRCULATE
8	Time

A/C correction

- When the A/C compressor is switched from A/C ON mode to OFF mode, the basic opening angle of the air mix actuator is switched from the A/C ON mode opening angle to the A/C OFF mode opening angle. This prevents a rise in airflow temperature. In addition, this correction retards the air mix actuator operation to prevent a sudden drop in airflow temperature.

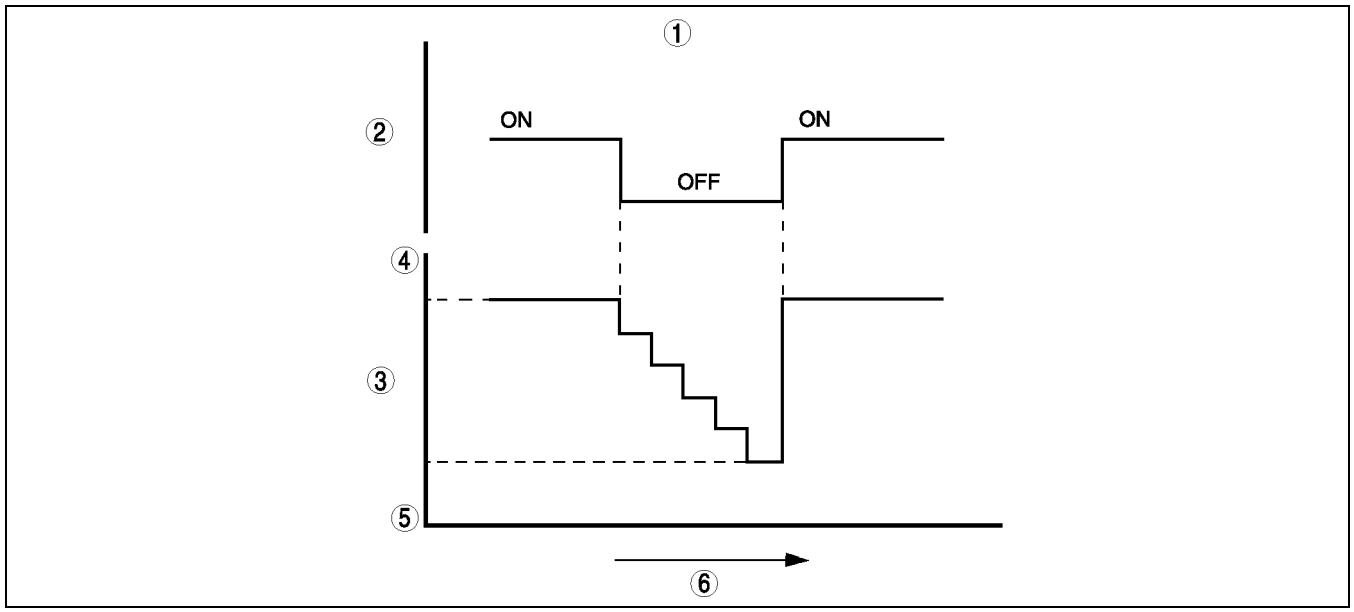

A6E8540T002

1	Air mix actuator opening angle delay
2	A/C mode
3	Air mix actuator opening angle correction amount

4	HOT
5	COLD
6	Time

MAX HOT and MAX COLD correction

- When the temperature is set to MAX HOT (temperature setting dial is turned to the right), air mix actuator is completely open (100%), when set to MAX COLD (temperature setting dial is turned to the left), it is firmly closed.

Coolant temperature correction

- There are cases where the engine coolant temperature is lowered when continuously idling in extremely low outside temperature. To prevent lower airflow temperature in this situation, the climate control unit adjusts the HOT air mix actuator to opening according to the engine coolant temperature. However, coolant temperature correction does not operate when the ambient temperature is **above 10°C {50°F}**.

Fail-safe function

- When the potentiometer of air mix actuator is malfunctioning, the air mix door is fixed. Under this situation, if the ignition switch is turned to the ON/LOCK position, the air mix door is controlled to be fully opened (MAX HOT) or closed (MAX COLD) based on the ambient temperature. In addition, the door is fully closed (MAX COLD) at the set temperature MAX COLD (15.0: European (L.H.D. U.K.) specs. 18.0: GCC specs.), and fully opened (MAX HOT) at the set temperature MAX HOT (29.0: European (L.H.D. U.K.) specs. 32.0: GCC specs.).

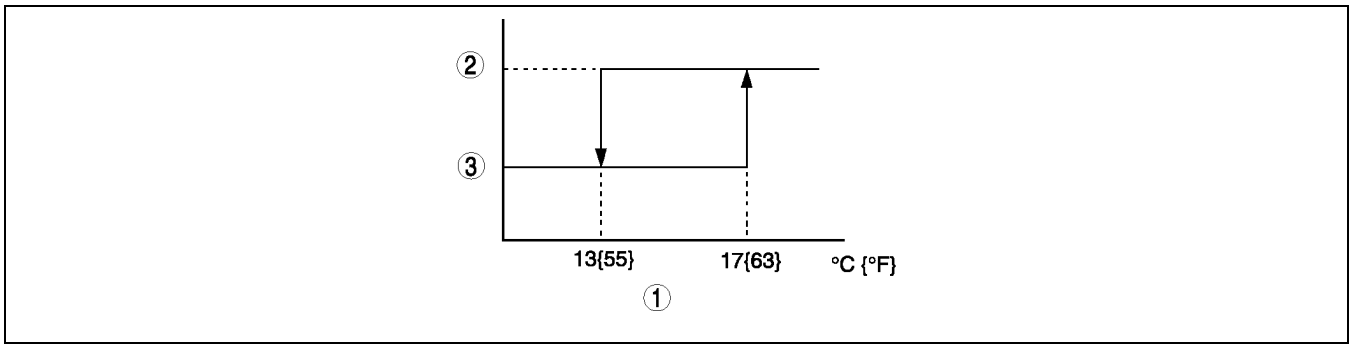

A6E8540T003

1	Ambient temperature
2	MAX COLD

3	MAX HOT

- If the air mix door locks and the target air mix actuator opening angle is not reached within **20 seconds**, the air mix actuator drive signal is stopped to prevent burning the motor.

AIRFLOW VOLUME CONTROL

A6E854001044T05

- Airflow volume is controlled by the power MOS FET so that the passenger compartment temperature remains at the target temperature (control computation value T2).
- Control computation value T2 is the target temperature in the cabin set by the climate control unit based on differences between set temperature and input temperature from the sensors.

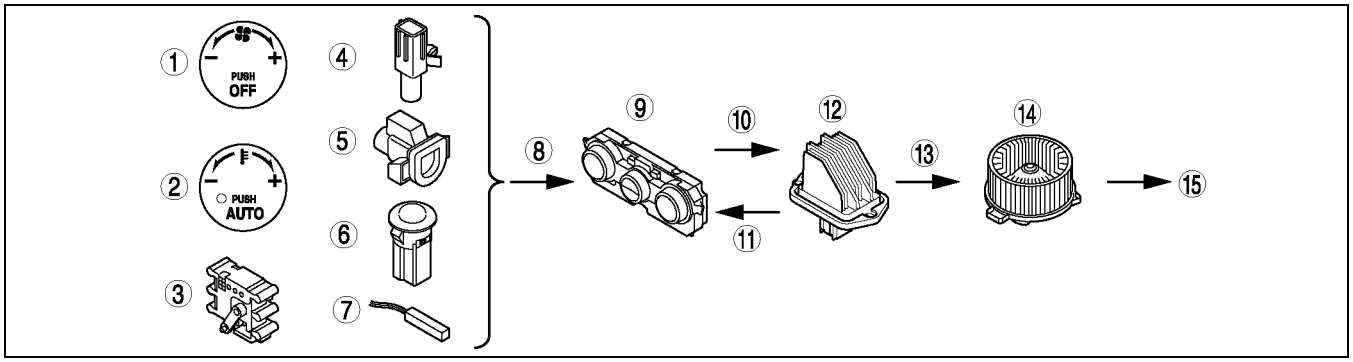

A6E8540T043

1	Fan switch
2	Set temperature
3	Airflow mode
4	Ambient temperature
5	Cabin temperature
6	Sunlight intensity
7	Coolant temperature
8	Signals

9	Climate control unit
10	Output
11	Feedback
12	Power MOS FET
13	Operation
14	Blower motor
15	Airflow volume changes

Airflow Volume Automatic Control

- Based on the set temperature, the ambient temperature, and sunlight intensity, the climate control unit calculates the blower motor voltage characteristic (AUTO voltage). It compares the differences among this voltage characteristic, and the target temperature (control computation value T2) and then determines the voltage to be applied to the blower motor.

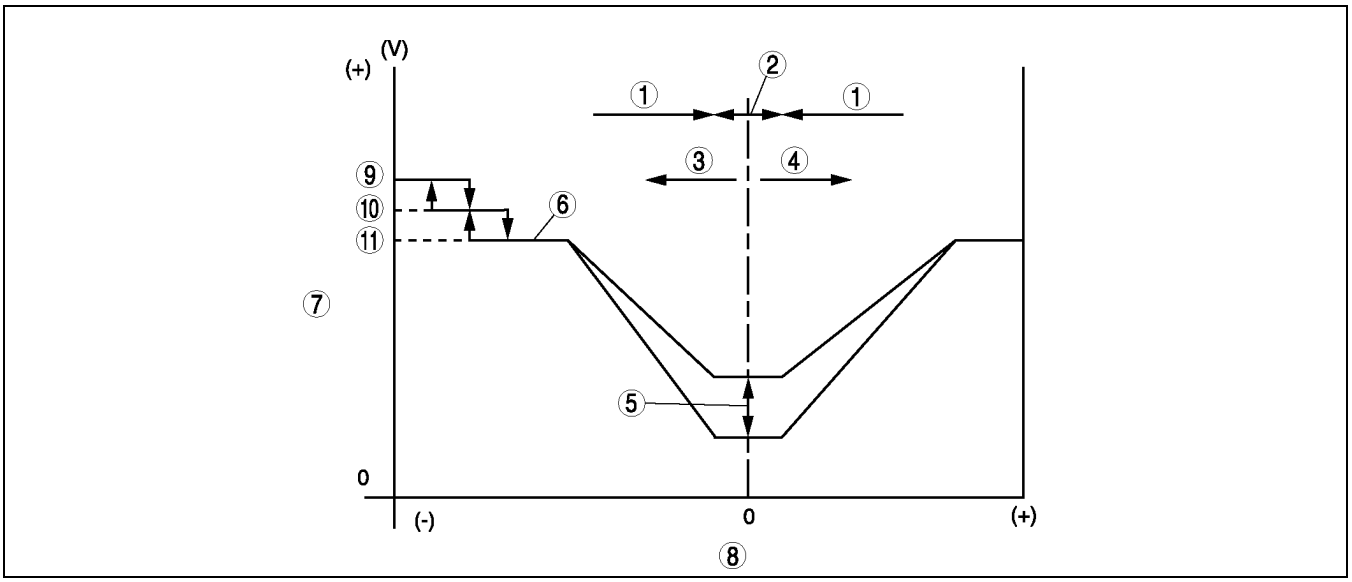

A6E8540T044

1	Transition period
2	Stable period
3	When cooling
4	When heating
5	Increases/decreases linearly with sunlight intensity
6	Blower motor applied voltage characteristic

7	Blower motor applied voltage
8	Control computain value T2
9	MAX-HI
10	MIDDLE-HI
11	AUTO-HI

U

Correction

Coolant temperature correction (warm-up correction)

- To prevent a large volume of cold air from blowing through the ventilation outlets when the engine is started in winter, coolant temperature control links the blower motor voltage to the rise in engine coolant temperature. However, coolant temperature correction does not operate when the defroster correction is running, when the cabin temperature is **above 20°C {68°F}**, or when airflow is in VENT mode.

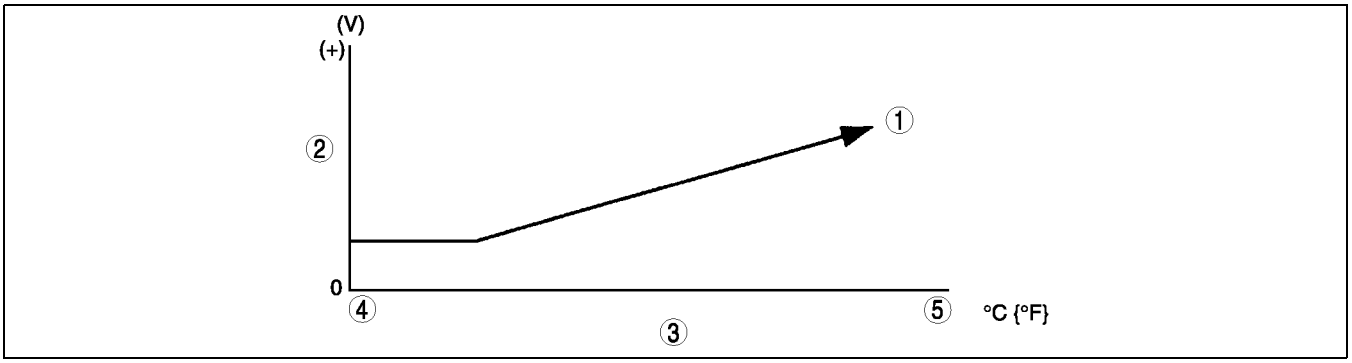

A6E8540T004

1	Rise to auto voltage
2	Blower motor applied voltage
3	Coolant temperature

4	Low
5	High

Mild start correction

- To prevent a large volume of warm air from blowing through the ventilation outlets when the blower motor is started in summer, the voltage applied to the blower motor is restricted for **3 seconds** after it starts. However, mild start correction does not operate when the passenger compartment temperature is **below 20°C {68°F}**, or when airflow is in any mode other than VENT.

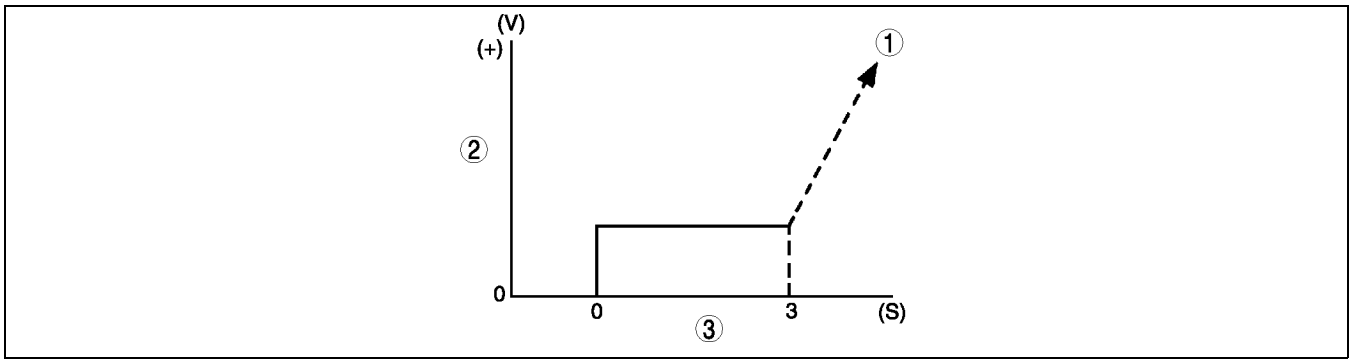

A6E8540T005

1	Rises to auto voltage
2	Blower motor applied voltage

3	Time

MAX HOT and MAX COLD correction

- When the temperature is set to 29.0 (European (L.H.D. U.K.) specs.) or 32.0 (GCC specs.), the applied voltage of the blower motor is set at AUTO-HI, when at 15.0 (European (L.H.D. U.K.) specs.) or 18.0 (GCC specs.), the applied voltage of the blower motor is set at MAX-HI. However, when in water temperature correction, MAX HOT correction does not take place.

Correction	Set temperature	Blower motor applied voltage
MAX HOT	29.0 (European (L.H.D. U.K.) specs.) 32.0 (GCC specs.)	12.1 (V): AUTO-HI
MAX COLD	15.0 (European (L.H.D. U.K.) specs.) 18.0 (GCC specs.)	B+: MAX-HI

Windshield mist prevention correction

- To prevent the air blown from the defroster when the heater is started in winter from clouding the windows, the blower motor and the A/C signal output are switched off for **6 seconds** after the ignition is turned to the ON position. This control only operates if the airflow is in HEAT, HEAT/DEF, or DEFROSTER mode.

Start compensation correction

- When the blower motor is started at **3.2 V**, it is run at a voltage of **4.4 V** for **2 seconds** to help it stabilize at the target voltage.

Defroster correction

- To improve defrosting and heating, **2.0 V** is added to the AUTO voltage calculated airflow volume automatic control when the defroster switch is turned on.

Fail-safe function

- If the blower motor is started with **more than 4.4 V**, a surge will occur and the motor may burn. To prevent this, the voltage applied to the blower motor is regulated to **4.4 V** for **1 second** when it is started.

Airflow Volume Manual Control

- The blower motor (airflow) has seven speeds and is operated by the fan switch.

Fan speed	Switch operation		Control device	Blower motor voltage
1st	Airflow volume automatic control, manual 2nd (–), manual 1st (–) or OFF (+ or –)	→manual 1st	Power MOS FET	4.4 (V)
2nd	Airflow volume automatic control, manual 1st (+), or manual 4th (–)	→manual 2nd	Power MOS FET	6.1 (V)
3rd	Airflow volume automatic control, manual 2nd (+), or manual 4th (–)	→manual 3rd	Power MOS FET	7.8 (V)
4th	Airflow volume automatic control, manual 3rd (+), or manual 5th (–)	→manual 4th	Power MOS FET	9.5 (V)
5th	Airflow volume automatic control, manual 4th (+), or manual 6th (–)	→manual 5th	Power MOS FET	10.8 (V)
6th	Airflow volume automatic control, manual 5th (+), or manual 7th (–)	→manual 6th	Power MOS FET	12.1 (V)
7th	Airflow volume automatic control, manual 6th (+), or manual 7th (+)	→manual 7th	Power MOS FET	B+

AIRFLOW MODE CONTROL

A6E854001044T06

- Airflow mode is controlled by the airflow mode actuator to improve efficiency, heating, and A/C comfort.

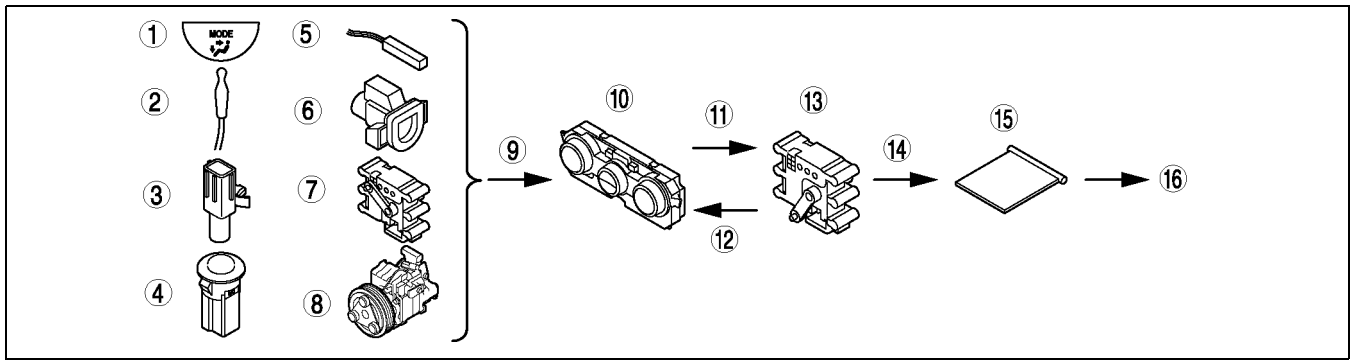

A6E8540T045

1	MODE switch
2	Evaporator temperature
3	Ambient temperature
4	Sunlight intensity
5	Coolant temperature
6	Cabin temperature
7	Air mix actuator opening degree
8	A/C compressor control condition

9	Signals
10	Climate control unit
11	Output
12	Feedback
13	Airflow modeactuator
14	Operation
15	Airflow mode doors
16	Airflow mode changes

U

Airflow Mode Automatic Control

- The climate control unit uses the present opening angle of the air mix actuator and the control condition of the A/C compressor to determine the airflow mode. When the A/C compressor is in OFF mode, the climate control unit varies the determined value of airflow mode according to the temperature signals received from the evaporator temperature sensor.

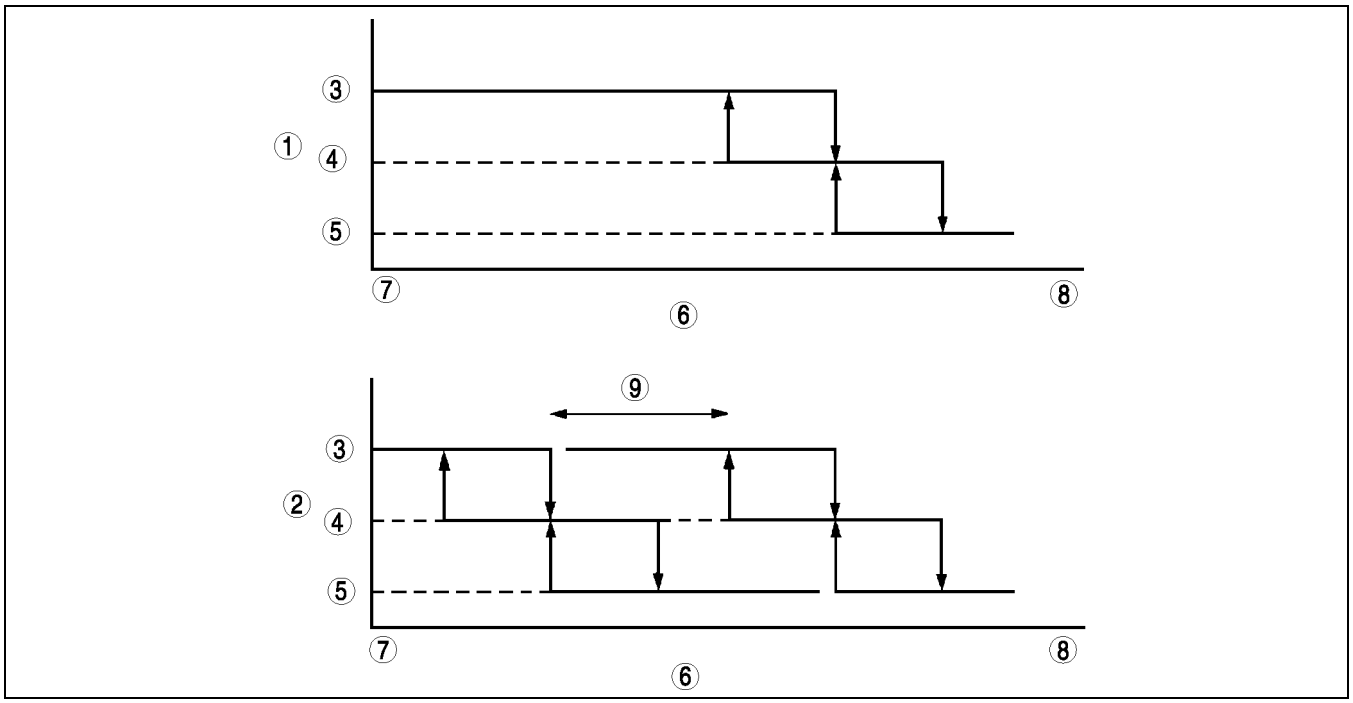

A6E8540T006

1	Airflow mode (A/C on mode)
2	Airflow mode (A/C off mode)
3	VENT
4	BI-LEVEL
5	HEAT

6	Air mix actuator
7	COLD
8	HOT
9	Amount varies

Correction

Ambient temperature correction (European (L.H.D. U.K.) specs.)

- To improve windshield and front door glass from fogging, airflow mode is fixed at HEAT/DEF when the ambient temperature is low. However, ambient temperature correction does not operate when the temperature is set at MAX COLD. (temperature setting dial is turned to the left)

Coolant temperature correction

- To prevent uncomfortable draughts of cold air blowing around the driver's feet soon after the engine is started in winter, airflow mode is switched from DEFROSTER to HEAT/DEF to HEAT mode to match the rise in engine coolant temperature. This control only operates when the passenger compartment temperature is **below 13°C {55°F}**, or when the passenger compartment temperature is **below 23°C {73°F}** and sunlight intensity is comparatively low.

Fail-safe function

- When the potentiometer of airflow mode actuator is malfunctioning, the airflow mode door is fixed. Under this situation, if the ignition switch is turned to the ON/LOCK position, the airflow mode door is controlled to be fully opened (DEFROSTER) or closed (VENT) based on the ambient temperature. In addition, the door is fully closed (VENT) in the manual VENT, and fully opened (DEFROSTER) in the manual DEFROSTER.

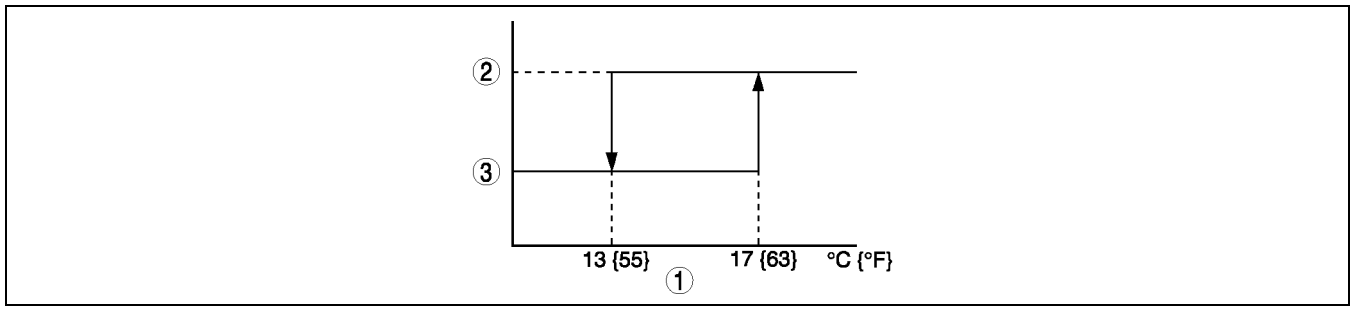

A6E8540T007

1	Ambient temperature
2	VENT
3	DEFROSTER

- If the airflow mode doors are locked and the target airflow mode is set by the climate control unit which does not reach to within **9 seconds**, the airflow mode actuator drive signal will be stopped to prevent the motor from burning.

Airflow Mode Manual Control

- Airflow can be selected by operating the MODE switch and the DEFROSTER switch.

Airflow mode	Switch operation	Air outlet
VENT	MODE switch set from HEAT/DEF to VENT	CENTER VENT, SIDE VENT
BI-LEVEL	MODE switch set from VENT to BI-LEVEL	CENTER VENT, SIDE VENT, HEAT
HEAT	MODE switch set from BI-LEVEL to HEAT MODE switch set from DEFROSTER to HEAT	SIDE VENT (L.H.D. only), HEAT, REAR HEAT (minimum air from DEFROSTER and SIDE DEMISTER)
HEAT/DEF	MODE switch set from HEAT to HEAT/DEF	SIDE VENT (L.H.D. only), HEAT, REAR HEAT, DEFROSTER, SIDE DEMISTER
DEFROSTER	DEFROSTER switch to ON	SIDE VENT (L.H.D. only), DEFROSTER, SIDE DEMISTER

U

AIR INTAKE CONTROL

A6E854001044T07

- Air intake mode is controlled by air intake actuator to adjust and cool down the cabin temperature quickly adjusting to cooling condition.

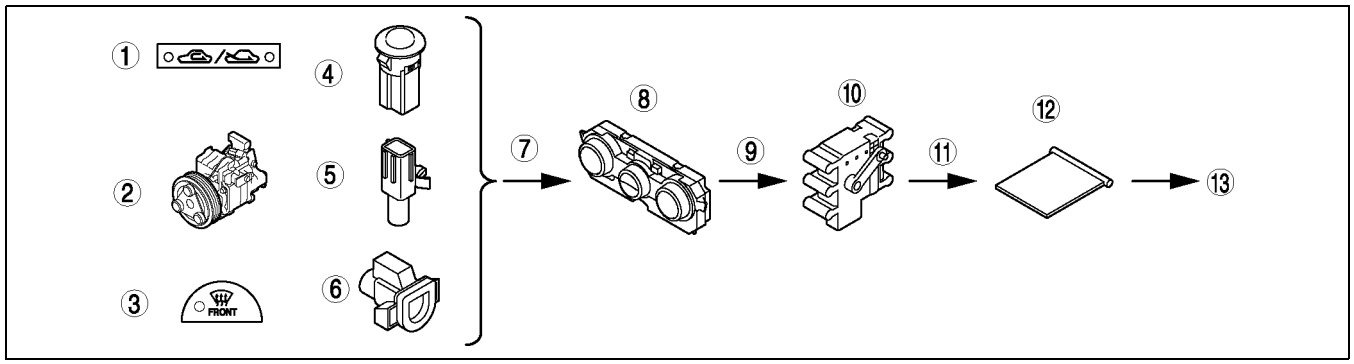

A6E8540T046

1	REC/FRESH switch
2	A/C compressor control condition
3	Defroster switch
4	Sunlight intensity
5	Ambient temperature
6	Cabin temperature
7	Signals
8	Climate control unit
9	Output
10	Air intake actuator
11	Operation
12	Air intake door
13	Air intake mode changes

Air Intake Automatic Control

- Based on the ambient temperature and sunlight intensity, the climate control unit calculates the cabin temperature computation value. By comparison with this cabin temperature computation value and actual cabin temperature, air intake mode is determined.

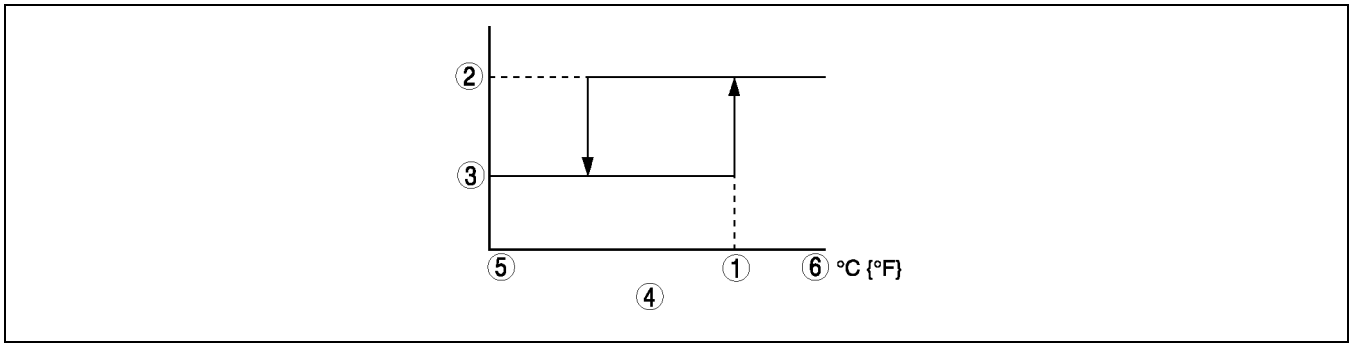

A6E8540T008

1	Cabin temperature computation value
2	Recirculate
3	Fresh

4	Cabin temperature
5	Low
6	High

Correction

MAX COLD correction

- When the temperature is set to 15.0 (European (L.H.D. U.K.) specs.) or 18.0 (GCC specs.), air intake is fixed in recirculated air intake mode to improve cooling effect. This correction does not operate when defroster correction is on or when the A/C compressor is in OFF mode or when the ambient temperature is **below 5°C {41°F}**.

Defroster correction

- When the defroster switch is on, air intake is fixed in fresh air intake mode to improve defrosting effect, and this correction also operates when recirculated air intake mode is on by manual operation.

Ambient temperature correction

- When the ambient temperature is **5 °C {41°F}** or below, air intake mode is fixed at FRESH to prevent windshield and front door glass fogging.

A/C OFF correction

- While in air intake automatic control and A/C OFF mode, air intake mode is fixed at FRESH.

Air Intake Manual Control

- The driver can switch air intake mode by operating the REC/FRESH switch.

Air intake mode	REC/FRESH switch operation
FRESH	Switching from RECIRCULATE to FRESH fixes mode in FRESH
RECIRCULATE	Switching from FRESH to RECIRCULATE fixes mode in RECIRCULATE

A/C COMPRESSOR CONTROL

A6E854001044T08

- In A/C compressor control, the A/C relay (A/C compressor) is controlled via the PCM so that discharged air is simultaneously cooled and dehumidified to provide comfortable air conditioning.
- The climate control unit sends A/C signals to the PCM which actuates the A/C relay.

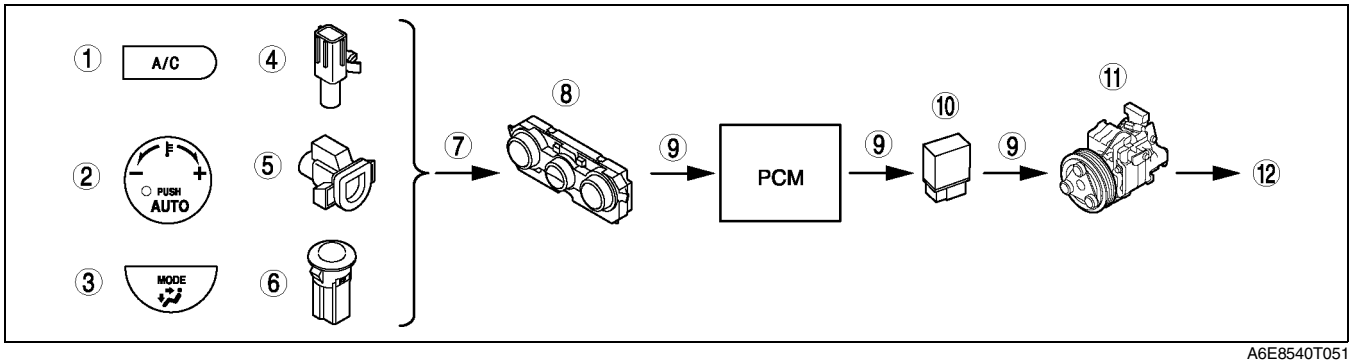

A6E8540T051

1	A/C switch
2	Set temperature
3	MODE switch
4	Ambient temperature
5	Cabin temperature
6	Sunlight intensity

7	Signals
8	Climate control unit
9	Output
10	A/C relay
11	A/C compressor
12	Operation

A/C Compressor Automatic Control

- The climate control unit determines A/C ON/OFF mode based on the ambient temperature. When A/C is in ON mode, an ambient temperature computation value is calculated based on the ambient temperature, set temperature, and temperatures from various sensors. This value is used to determine the temperature of the air passing through the evaporator. The temperature of this air determines whether the climate control unit turns the magnetic clutch (A/C signal) off or on. When the ambient temperature is high/low, the climate control unit lowers/raises the magnetic clutch off temperature. This improves cooling comfort.

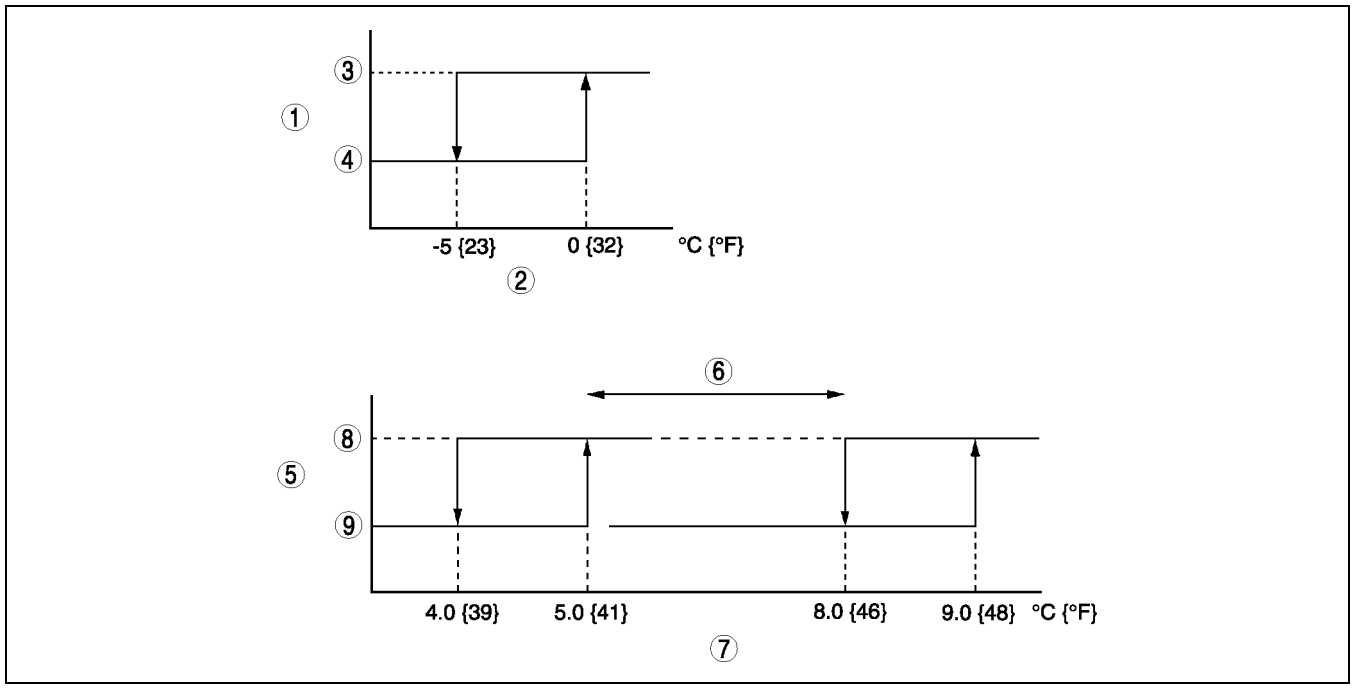

A6E8540T009

1	A/C mode ON/OFF decision
2	Ambient temperature
3	A/C ON
4	A/C OFF
5	A/C ON/OFF mode determination when A/C is in ON mode.

6	Varies with an ambient temperature computation value.
7	Evaporator temperature
8	A/C signal on
9	A/C signal off

Correction

Defroster correction

- To improve defrost effect when the DEFROSTER switched on, select A/C mode and set the A/C signal ON/OFF temperature is set at **5.0/4.0°C**. However, when in ambient temperature correction, defroster correction does not take place.

Ambient temperature correction

- When the ambient temperature is **below –5°C {23°F}**, this correction fixes the A/C compressor in OFF mode to protect the A/C compressor (that is, to prevent A/C compressor fluid compression). If the A/C switch is pressed, only the indicator will indicate; the A/C compressor will not operate.

Windshield mist prevention correction

- To prevent the air blown from the defroster when the heater is started in winter from clouding the windows, the blower motor and the A/C signal output are switched off for **6 seconds** after the ignition is turned to ON position. This control only operates if the airflow is in HEAT, HEAT/DEF, or DEFROSTER mode during airflow volume automatic control.

MAX COLD correction

- When temperature is set to MAX COLD (temperature setting dial is turned to the left), the A/C signal ON/OFF temperature is at **5.0/4.0°C**. However, when in ambient temperature correction, MAX COLD correction does not take place.

A/C Compressor Manual Control

- A/C ON (A/C mode, ECO mode) or OFF mode is selected by operating the A/C switch.

A/C mode		Operation condition
A/C ON MODE	A/C MODE (A/C display)	A/C compressor is set in ON mode A/C compressor operates below evaporator freezing level so that the evaporator temperature is within a certain range
	ECO MODE (ECO display)	A/C compressor is set in ON mode Magnetic clutch operates at higher evaporator temperature level than manual A/C mode to reduce A/C compressor operation time and improve driving economy
A/C OFF MODE		A/C compressor does not operate

A/C ON/OFF mode determination in A/C mode

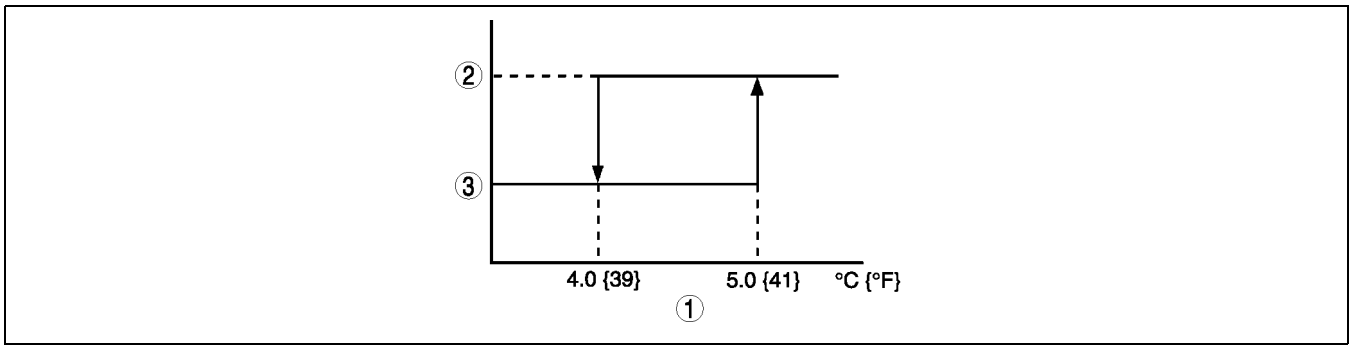

A6E8540T010

1	Evaporator temperature
2	A/C ON
3	A/C OFF

A/C ON/OFF mode determination in ECO mode

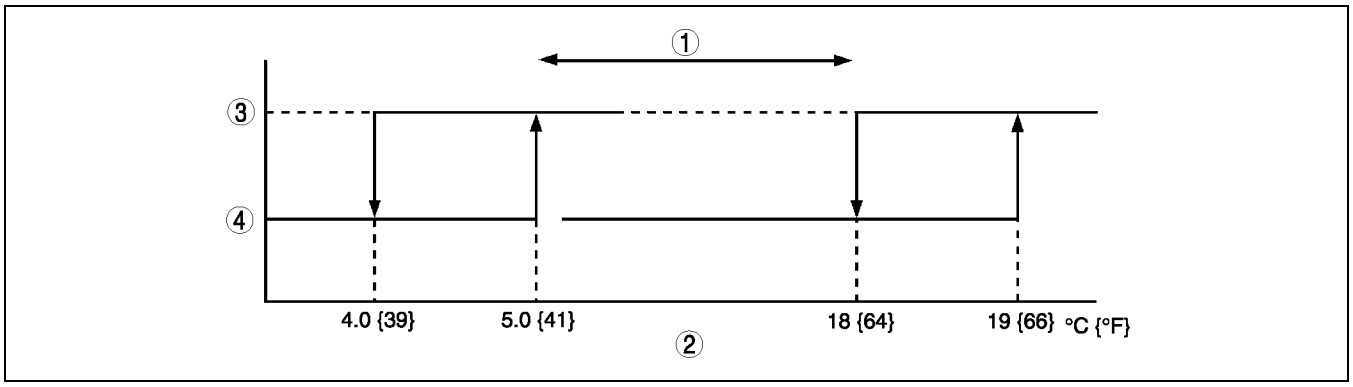

A6E8540T011

1	Varies with an ambient temperature computation value.
2	Evaporator temperature
3	A/C ON
4	A/C OFF

SENSOR FAIL-SAFE FUNCTION

A6E854001044T09

- If the input signals received from the sensors are abnormal, the climate control unit will assume a malfunction and fix the values for the temperature signals from the sensors as shown below to prevent abnormal A/C control.

Sensor	Temperature fixed in case of malfunction
Cabin temperature sensor	25°C {77°F}
Ambient temperature sensor	15°C {59°F}
Water temperature sensor	85°C {185°F}
Evaporator temperature sensor	0°C {32°F}
Solar radiation sensor	0 W/m^2 {0 kcal/m^2·s}

SENSOR SIGNAL DELAY FUNCTION

A6E854001044T10

- Sometimes signals received from sensors will indicate abnormal readings. For example, intermittent or obstructed sunlight (when the vehicle is traveling on city streets or through highway tunnels) causes the sensor signals to be abnormal. When the vehicle is parked and the doors are opened/closed, sunlight intensity, ambient temperature, and cabin temperature signals may be interrupted or may vary suddenly and extremely due to heat radiation from the road. If control is carried out faithfully according to the signals input by the sensors, conditions in the passenger compartment may become uncomfortable and control will not be smooth. The climate control unit delays the input signals for sunlight intensity, ambient temperature, and cabin temperature. It then takes an average value of the readings it receives so that control remains stable, as shown below.
- In winter, once the engine is stopped and then restarted and the temperature around the engine remains high, the ambient temperature sensor will detect the engine heat, therefore, the system controls do not operate according to the actual ambient temperature. To prevent this from happening, each control operates based on the ambient temperature data stored in the climate control unit prior to the engine being stopped, as long as the engine coolant temperature is **55 °C**or above when the engine is restarted.

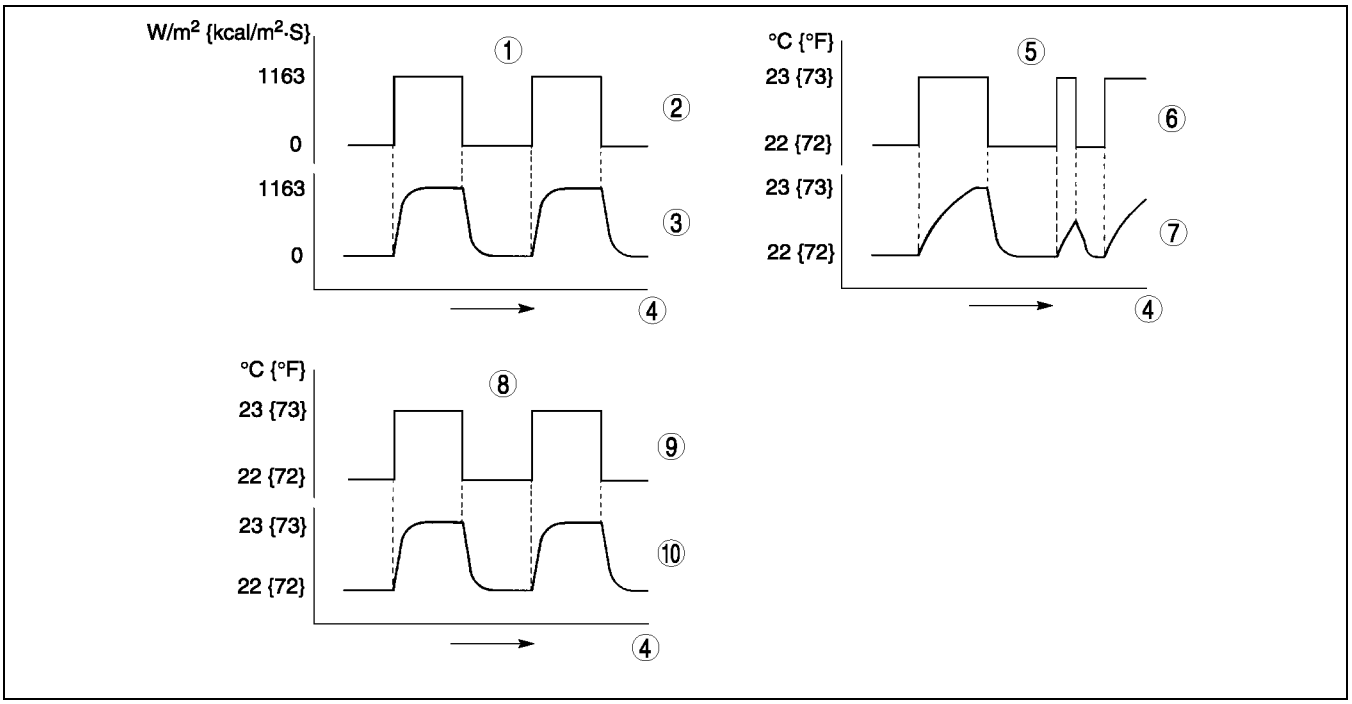

A6E8540T012

1	Sunlight intensity delay (example)
2	Actual sunlight intensity
3	Sunlight intensity input
4	Time
5	Ambient temperature delay (example)

6	Actual ambient temperature
7	Ambient temperature input
8	Cabin temperature delay (example)
9	Actual cabin temperature
10	Cabin temperature input

ON-BOARD DIAGNOSTIC FUNCTION

A6E854001044T11

Outline

- Based on the sunlight intensity and temperature signals from the various sensors, the climate control unit performs very complex control to the output actuation devices. Therefore, the operating condition of the output devices may vary due to input conditions, even though the controls on the climate control unit are not changed. As a result, when a malfunction occurs in the control system, it may be difficult to reproduce the symptom and to isolate the malfunctioning part of the system. To avoid such difficulty, the climate control unit is programmed with a on-board diagnostic function which input system is malfunctioning. It can also check the output system separately from the input system.
- The on-board diagnostic function has three modes: present failure indication, past failure indication, and output device operation check.
- The climate control unit terminal 1F is connected to the body ground by the body grounding of the A/C check connector, whereby voltage fluctuation occurs. The climate control unit detects this voltage fluctuation and activates the on-board diagnostic function.

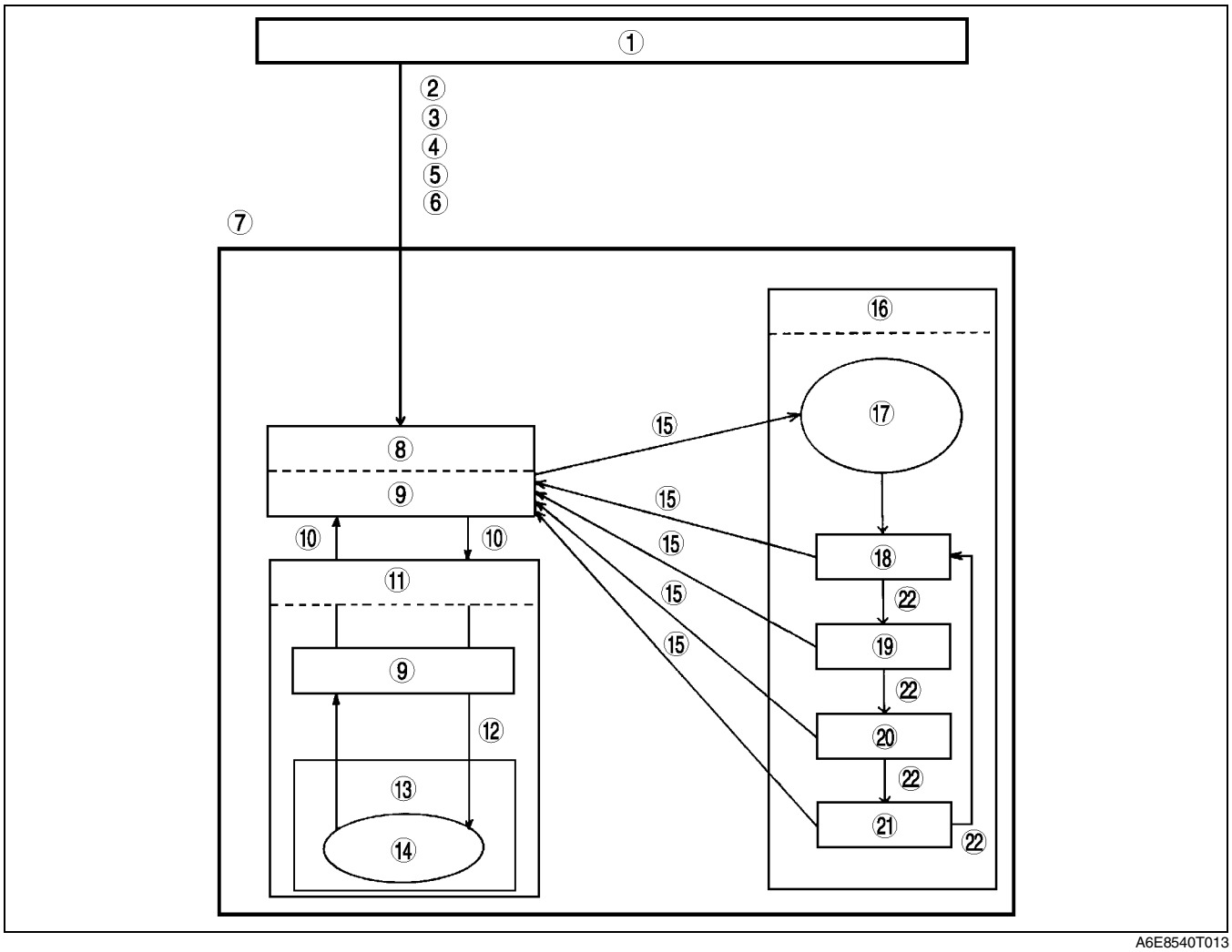

A6E8540T013

1	Normal control
2	Warm up the engine
3	Turn the ignition switch to LOCK position
4	Short the A/C check connecotr to the body ground using a jumper wire
5	Light the solar radiation sensor with **60 W** lamp at a distance **100 mm {3.9 in}**
6	Start the engine
7	On-board diagnostic
8	Present failure indication
9	Diagnostic trouble code(s) indicated
10	A/C switch on
11	Past failure indication

12	Press REC/FRESH switch and AUTO switch at the same time
13	Past failure memory deletion
14	Rear defroster indicator light flashes once
15	AUTO switch on
16	Output device operation check
17	Check indicator lights illuminate for **4 seconds**.
18	Step 1
19	Step 2
20	Step 3
21	Step 4
22	REC/FRESH switch on

Present Failure Indication Mode

- In present failure indication mode, present failures in the control system circuits (open, short circuits) are detected, and the flashing of the rear defroster indicator light on the climate control unit indicates the DTCs shown in the table below.

Past Failure Indication Mode

- In past failure indication mode, past failures (intermittent problems) in the input sensor circuits (open, short circuits) are stored, and the flashing of the rear defroster indicator light on the climate control unit indicates the DTCs shown in the table below. Erase DTCs from the memory after failures have been corrected so they are not maintained as past failures.

Diagnostic trouble codes

DTC No.	Indicator pattern	Diagnosed circuit	Detected condition	Memorized
02		Solar radiation sensor (present)	Open circuit in solar radiation sensor circuit Short circuit in solar radiation sensor circuit (terminal B side only)	No
06		Cabin temperature sensor (present)	Open/short circuit is in cabin temperature sensor circuit	No
07		Cabin temperature sensor (past)	Cabin temperature sensor circuit is entered fail-safe mode at least once	Yes
10		Evaporator temperature sensor (present)	Open/short circuit is in evaporator temperature sensor circuit	No
11	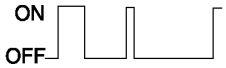	Evaporator temperature sensor (past)	Evaporator temperature sensor circuit is entered fail-safe mode at least once	Yes
12		Ambient temperature sensor (present)	Open/short circuit is in Ambient temperature sensor circuit	No
13		Ambient temperature sensor (past)	Ambient temperature sensor circuit is entered fail-safe mode at least once	Yes
14		Water temperature sensor (present)	Open/short circuit is in Water temperature sensor circuit	No
15		Water temperature sensor (past)	Water temperature sensor circuit is entered fail-safe mode at least once	Yes
18		Air mix actuator (potentiometer) (present)	Open/short circuit is in air mix actuator (potentiometer) circuit	No
19		Air mix actuator (potentiometer) (past)	Air mix actuator (potentiometer) circuit is entered fail-safe mode at least once	Yes
21	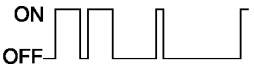	Airflow mode actuator (potentiometer) (present)	Open/short circuit is in airflow mode actuator (potentiometer) circuit	No
22		Airflow mode actuator (potentiometer) ((past)	Airflow mode actuator (potentiometer) circuit is entered fail-safe mode at least once	Yes
58	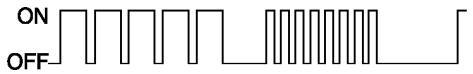	Air mix actuator (motor lock) (past)	Air mix actuator circuit is entered fail-safe mode at least once	Yes
59	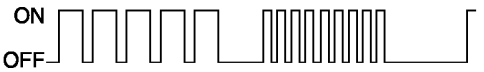	Airflow mode actuator (motor lock) (past)	Airflow mode actuator circuit is entered fail-safe mode at least once	Yes

Output Device Operation Check Mode

- In the output device operation check mode, the climate control unit forces all the output system actuation devices to operate regardless of the input system. The displays change and the switch indicator lights illuminate automatically according to the actuator operated.
- Inspect visually, listen for operation sound, and place hands over air discharge outlets to check for correct operating conditions and to locate the malfunctioning system.

Output device operation check table

Step	Operating device	Operating conditions	Monitor*	Other device conditions
1	Blower motor speed	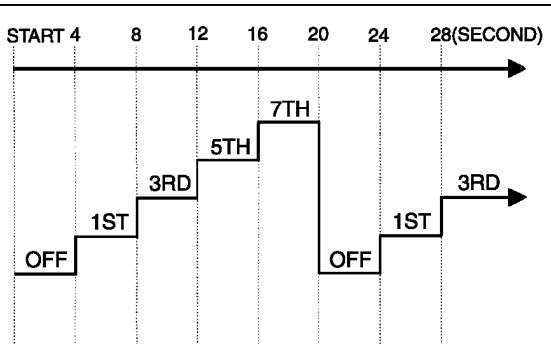	1	• Air mix actuator operation — 50% • Airflow mode actuator operation — VENT • Air intake actuator operation — FRESH • A/C compressor operation — ON
2	Air mix actuator operation	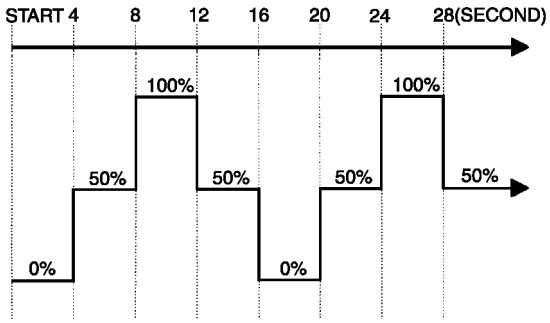	21.0 20.5 20.0	• Blower motor speed — 3rd • Airflow mode actuator operation — VENT • Air intake actuator operation — FRESH • A/C compressor operation — ON
3	Airflow mode actuator operation	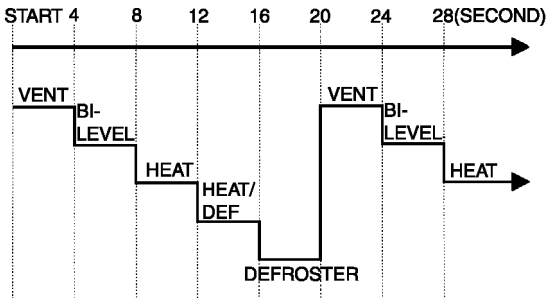	3	• Blower motor speed — 3rd • Air mix actuator operation — 50% • Air intake actuator operation — FRESH • A/C compressor operation — ON
4	Air intake actuator operation	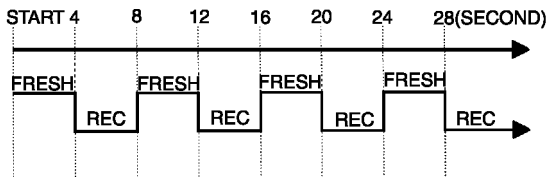	4	• Blower motor speed — 3rd • Air mix actuator operation — 0% • Airflow mode actuator operation — VENT
	A/C compressor operation	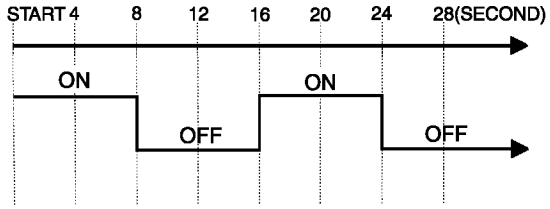		

* : Shown on the information display according to step.

U

Mazda6 Bodyshop Manual

FOREWORD

This bodyshop manual is intended for use by technicians of Authorized Mazda Dealers to help them service and repair Mazda vehicles. It can also be useful to owners and operators of Mazda vehicles in performing limited repair and maintenance on Mazda vehicles.

For proper repair and maintenance, a thorough familiarization with this manual is important, and it should always be kept in a handy place for quick and easy reference.

All the contents of this manual, including drawings and specifications, are the latest available at the time of printing.
As modifications affecting repair or miantenance occur, relevant information supplementary to this volume will be made available at Mazda dealers. This manual should be kept up-to-date.

Mazda Motor Corporation reserves the right to alter the specifications and contents of this manual without obligation or advance notice.

All rights reserved. No part of this book may be reproduced or used in any form or by any means, electronic or mechanical including photocopying and recording and the use of any kind of information storage and retrieval system-without permission in writing.

Mazda Motor Corporation
HIROSHIMA, JAPAN

APPLICATION:

This manual is applicable to vehicles beginning with the Vehicle Identification Numbers (VIN) shown on the following page.

CONTENTS

Title	Section
GENERAL INFORMATION	I
CONSTRUCTION	II
PANEL REPLACEMENT	III
WATER-PROOF AND RUST PREVENTIVE TREATMENT	IV
DIMENSIONS	V
PLASTIC BODY PARTS	VI
PRIMARY COLOR MIXTURE CHART FOR BODY COLORS	VII

© 2002 Mazda Motor Corporation
PRINTED IN THE NETHERLANDS, March 2002
3360–1E–02C

WARNING

Servicing a vehicle can be dangerous. If you have not received service-related training, the risks of injury, property damage, and failure of servicing increase. The recommended servicing procedures for the vehicle in this workshop manual were developed with Mazda-trained technicians in mind. This manual may be useful to non-Mazda trained technicians, but a technician with our service-related training and experience will be at less risk when performing service operations. However, all users of this manual are expected to at least know general safety procedures.

This manual contains "Warnings" and "Cautions" applicable to risks not normally encountered in a general technician's experience. They should be followed to reduce the risk of injury and the risk that improper service or repair may damage the vehicle or render it unsafe. It is also important to understand that the "Warnings" and "Cautions" are not exhaustive. It is impossible to warn of all the hazardous consequences that might result from failure to follow the procedures.

The procedures recommended and described in this manual are effective methods of performing service and repair. Some require tools specifically designed for a specific purpose. Persons using procedures and tools which are not recommended by Mazda Motor Corporation must satisfy themselves thoroughly that neither personal safety nor safety of the vehicle will be jeopardized.

The contents of this manual, including drawings and specifications, are the latest available at the time of printing, and Mazda Motor Corporation reserves the right to change the vehicle designs and alter the contents of this manual without notice and without incurring obligation.

Parts should be replaced with genuine Mazda replacement parts or with parts which match the quality of genuine Mazda replacement parts. Persons using replacement parts of lesser quality than that of genuine Mazda replacement parts must satisfy themselves thoroughly that neither personal safety nor safety of the vehicle will be jeopardized.

Mazda Motor Corporation is not responsible for any problems which may arise from the use of this manual. The cause of such problems includes but is not limited to insufficient service-related training, use of improper tools, use of replacement parts of lesser quality than that of genuine Mazda replacement parts, or not being aware of any revision of this manual.

VEHICLE IDENTIFICATION NUMBERS (VIN)

European (L.H.D.) specs.

JMZ	GG1232*#	100001—	JMZ	GG1432*#	100001—
JMZ	GG1282*#	100001—	JMZ	GG1482*#	100001—
JMZ	GG12F2*#	100001—	JMZ	GG14F2*#	100001—
JMZ	GG12F5*#	100001—	JMZ	GG14F5*#	100001—

U.K. specs.

JMZ	GG12820#	100001—	JMZ	GG14820#	100001—
JMZ	GG12F20#	100001—	JMZ	GG14F20#	100001—
JMZ	GG12F50#	100001—	JMZ	GG14F50#	100001—
JMZ	GG14320#	100001—			

GCC specs.

JM7	GG32F**#	100001—	JM7	GG34F**#	100001—
JM7	GG42F**#	100001—	JM7	GG44F**#	100001—

GENERAL INFORMATION

HOW TO USE THIS MANUAL I-2
HOW TO READ EFFICIENT REPLACEMENT OF BODY PANELS..... I-2
HOW TO READ BODY DIMINSIONS..... I-3
SERVICE PRECAUTIONS I-5
SERVICE PRECAUTIONS I-5
EFFICIENT REPLACEMENT OF BODY PANELS..... I-7
EFFICIENT REMOVAL OF BODY PANELS..... I-7
INSTALLATION PREPARATIONS I-8
EFFICIENT INSTALLATION OF BODY PANELS..... I-9
AFTER-INSTALLATION RUST PROOFING, NOISE AND VIBRATION INSULATING I-12

HOW TO USE THIS MANUAL

HOW TO READ EFFICIENT REPLACEMENT OF BODY PANELS

A6E201000001B01

- This section contains information on the body panels in regard to the welding types, number of spot welds, and cut-and-join locations that are necessary for panel removal and installation.
- The type of weld and positions and indicated by symbol.
- Some sections have notes concerning the operation being performed. thoroughly read and understand the notes before carrying out any procedures.

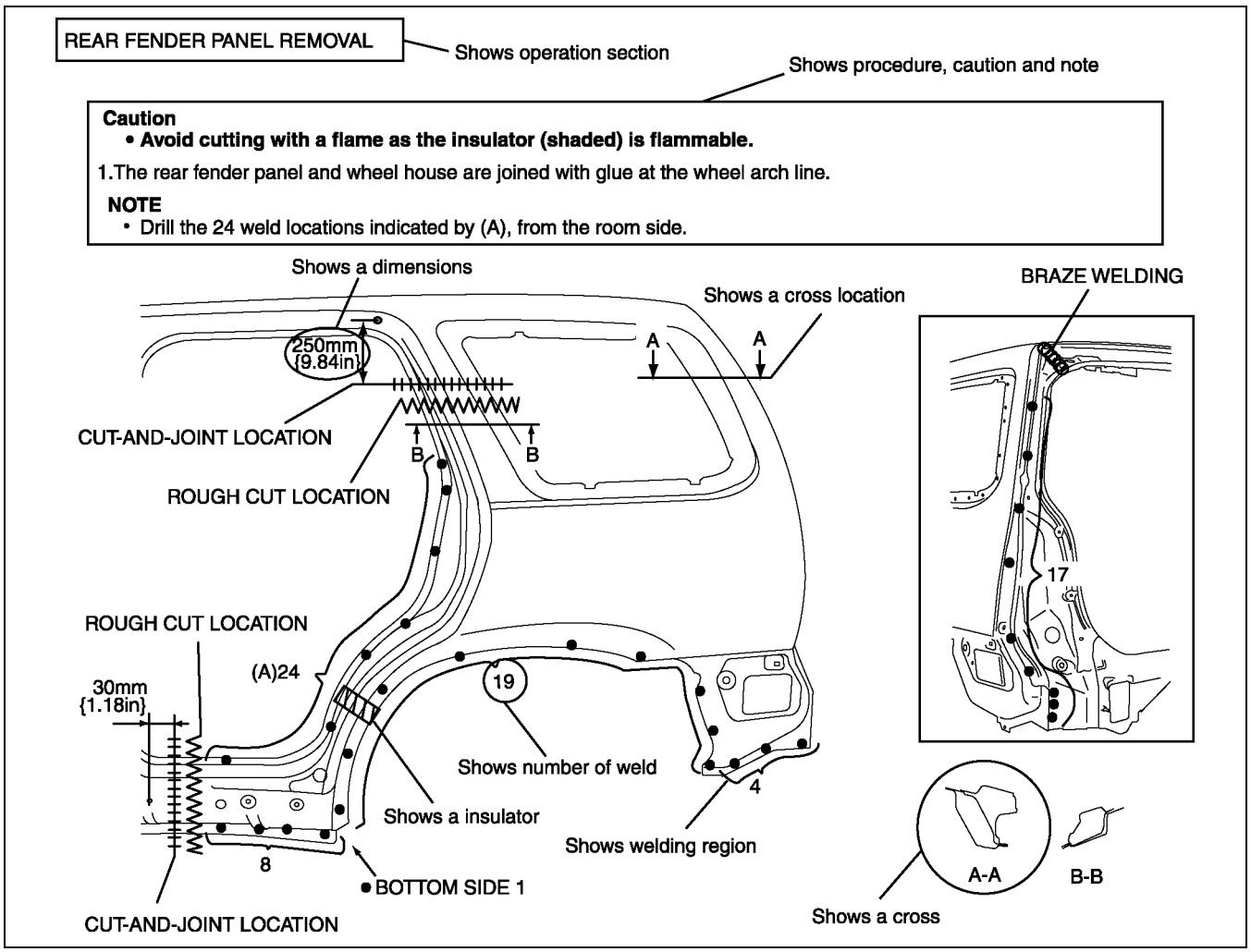

MZZ2010B001

Symbols of Panel Replacement

- The following 6 symbols are used to indicate the type of weld that is used when replacing body panels.

SYMBOL	MEANING
●	Spot welding
■	CO^2 arc welding (plug welding)
+	CO^2 spot welding

SYMBOL	MEANING
|||||	Continuous MIG welding (Cut-and-join location)
○○○	Braze welding
⋀⋀⋀	Rough cut location

MZZ2010B002

HOW TO READ BODY DIMINSIONS

A6E201000001B02

Body Dimensions (Flat-plane Dimensions)

- Flat-plane dimensions are the dimensions measured by projecting certain reference points onto a plane surface.
- When there are no specific indications, the standard points and dimensions are symmetrical in regard to the center of the vehicle.
- The hypothetical lines may differ according to the vehicle model.
- The outline drawing shows the figure that projected vehicle from the upper side.

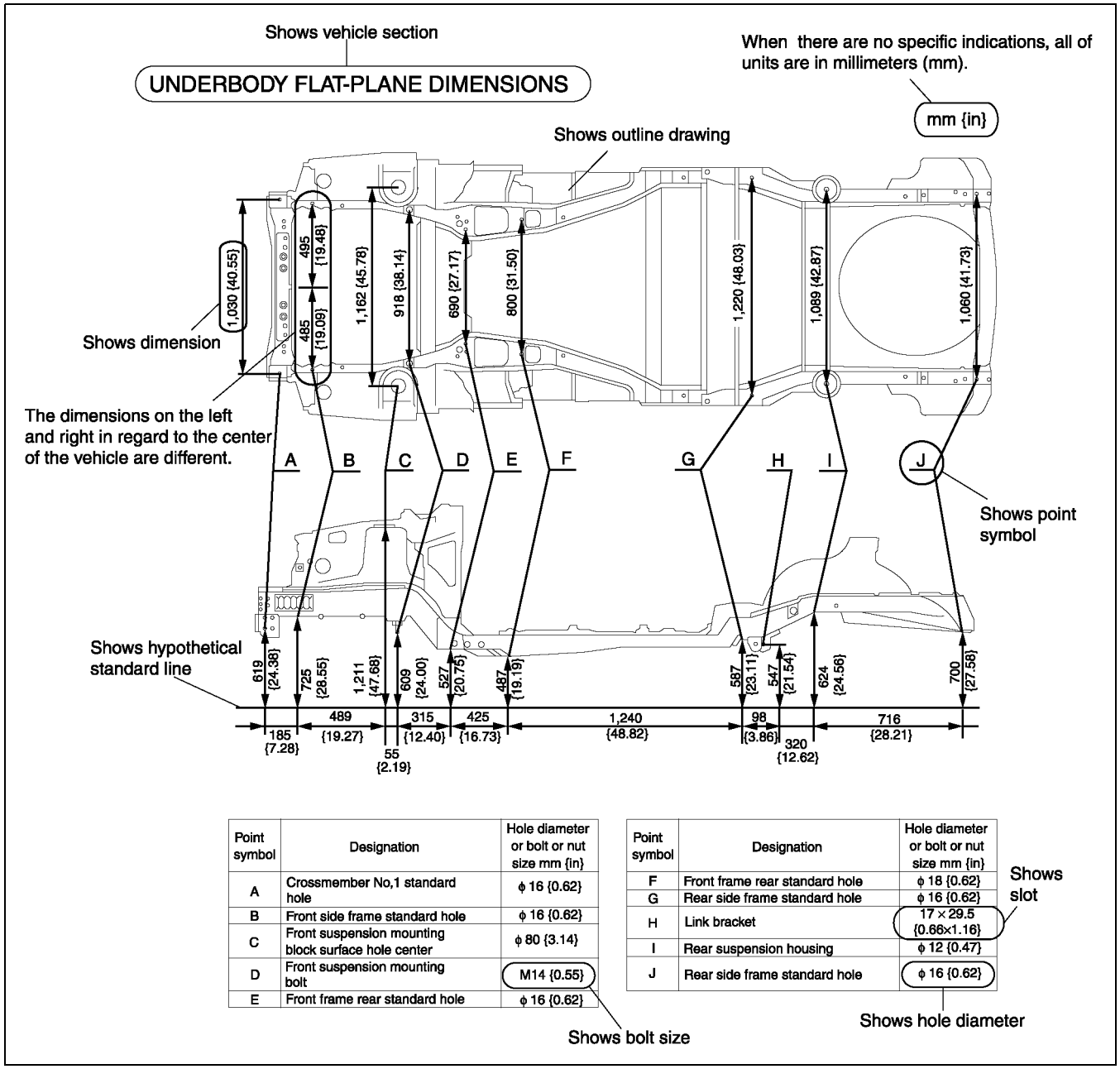

Point symbol	Designation	Hole diameter or bolt or nut size mm {in}
A	Crossmember No,1 standard hole	ϕ 16 {0.62}
B	Front side frame standard hole	ϕ 16 {0.62}
C	Front suspension mounting block surface hole center	ϕ 80 {3.14}
D	Front suspension mounting bolt	M14 {0.55}
E	Front frame rear standard hole	ϕ 16 {0.62}

Shows bolt size

Point symbol	Designation	Hole diameter or bolt or nut size mm {in}
F	Front frame rear standard hole	ϕ 18 {0.62}
G	Rear side frame standard hole	ϕ 16 {0.62}
H	Link bracket	17 × 29.5 {0.66×1.16}
I	Rear suspension housing	ϕ 12 {0.47}
J	Rear side frame standard hole	ϕ 16 {0.62}

Shows slot

Shows hole diameter

MZZ2010B003

Body Dimensions (Straight-line Dimensions)

- Straight-line dimensions are the actual dimensions between two standard points.
- When there are no specific indications, the standard points and dimensions are symmetrical in regard to the center of the vehicle.

ROOM STRAIGHT-LINE DIMENSIONS (2)

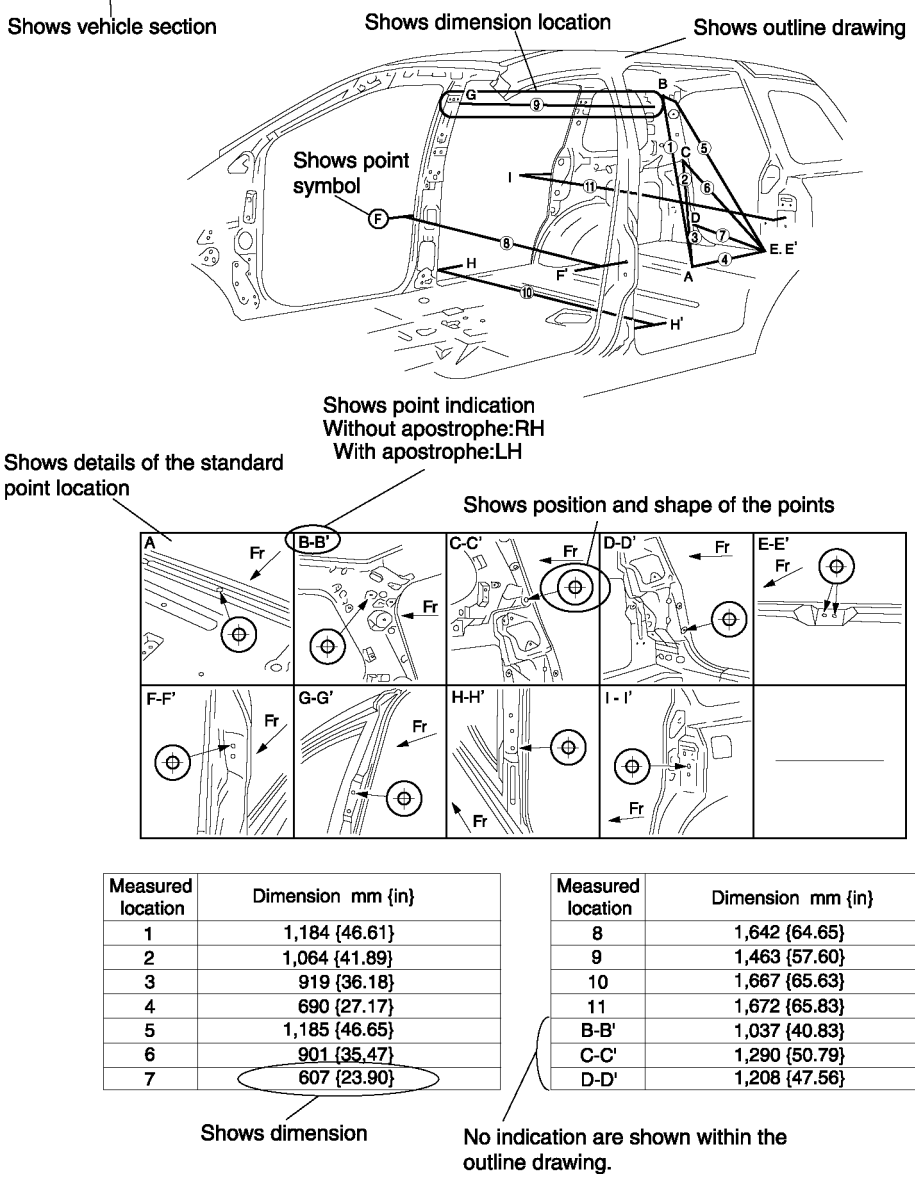

Measured location	Dimension mm {in}
1	1,184 {46.61}
2	1,064 {41.89}
3	919 {36.18}
4	690 {27.17}
5	1,185 {46.65}
6	901 {35.47}
7	607 {23.90}

Measured location	Dimension mm {in}
8	1,642 {64.65}
9	1,463 {57.60}
10	1,667 {65.63}
11	1,672 {65.83}
B-B'	1,037 {40.83}
C-C'	1,290 {50.79}
D-D'	1,208 {47.56}

Shows dimension

No indication are shown within the outline drawing.

MZZ2010B004

Symbols of Body Dimensions

- The following 8 symbols are used to indicate the standard points.

SYMBOL	MEANING
⊕	Center of circular hole
⊕	Center elliptical hole
⊕	Edge of hole
⊕	Notch

SYMBOL	MEANING
⊕	Panel seam, bead, etc.
← (arrow only)	Bolt tip
⊕	Center of rectangular-shaped hole
⊕	Edge of rectangular-shaped hole

MZZ2010B005

SERVICE PRECAUTIONS

SERVICE PRECAUTIONS

A6E203600025B01

Arrangement of Workshop

- Arrangement of the workshop is important for safe and efficient work.

Safety Precautions

- Protective head covering and safety shoes should always be worn. Depending upon the nature of the work, gloves, safety glasses, ear protectors, face shield, etc., should also be used.

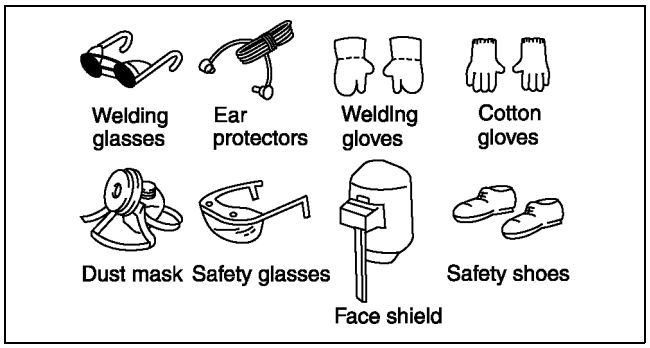

MZZ2036B001

Vehicle Protection

- Use seat covers and floor covers.
- Use heat-resistant protective covers to protect glass areas and seats from heat or sparks during welding.
- Protect items such as moldings, garnishes, and ornaments with tape when welding.

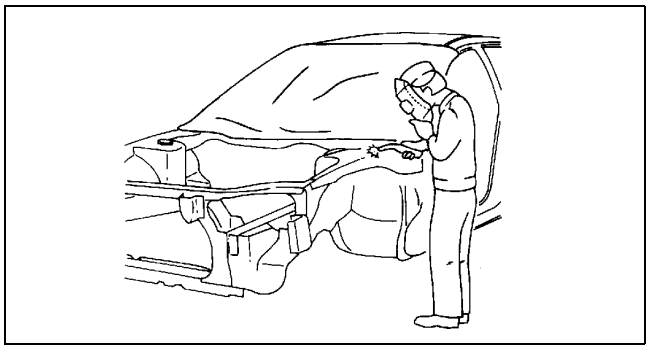

MZZ2036B002

Remove Dangerous Articles

- Remove the fuel tank before using an open flame in that area. Plug connection piping to prevent fuel leakage.

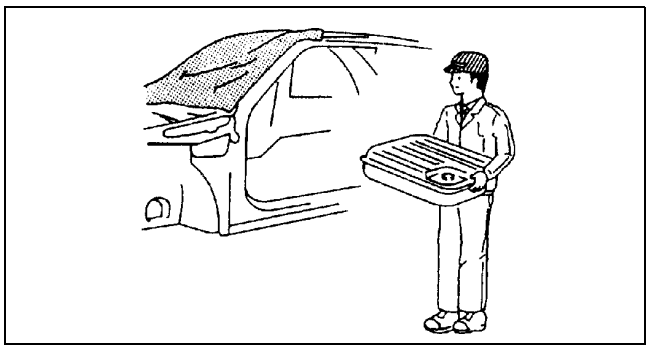

MZZ2036B003

Use of Pulling Equipment

- When using pulling equipment, keep away from the pulling area and use safety wires to prevent accidents.

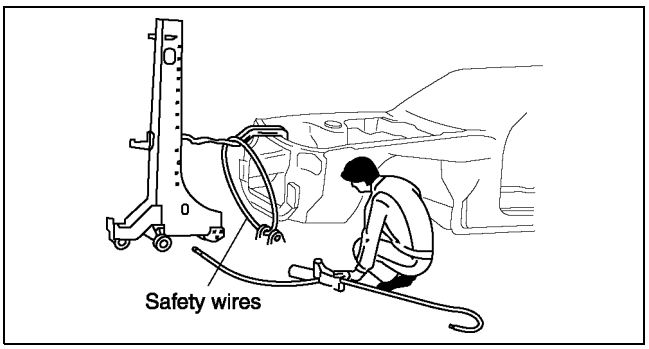

MZZ2036B004

Prevent Short Circuits

- Turn the ignition switch to the LOCK position.
- Disconnect the buttery cables.

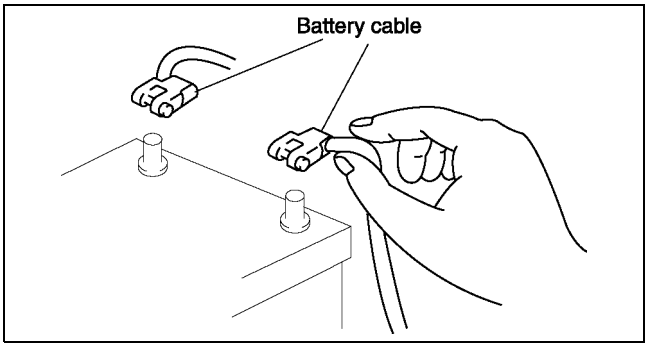

MZZ2036B005

- Securely connect the welding machine ground near the welding area.

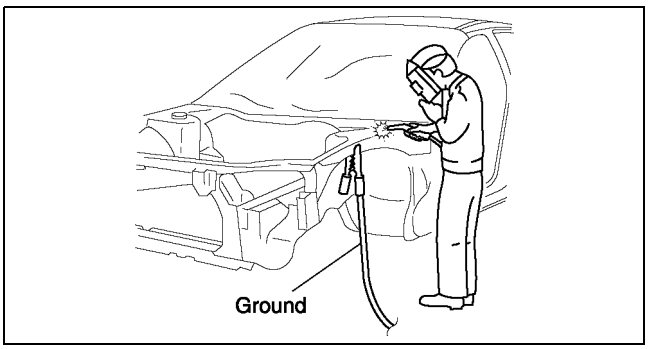

MZZ2036B006

EFFICIENT REPLACEMENT OF BODY PANELS

EFFICIENT REMOVAL OF BODY PANELS

A6E203800026B01

Body Measurements

- Before removal or rough-cutting, first measure the body at and around the damaged area against the standard reference dimension specifications. If there is deformation, use frame repair equipment to make a rough correction.

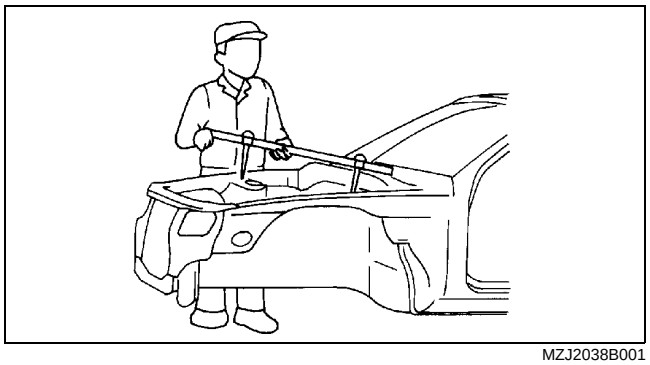

MZJ2038B001

Prevention of Body Deformation

- Use a clamp or a jack for removal and reinforce at and around the rough-cutting location to prevent deforming of the body.

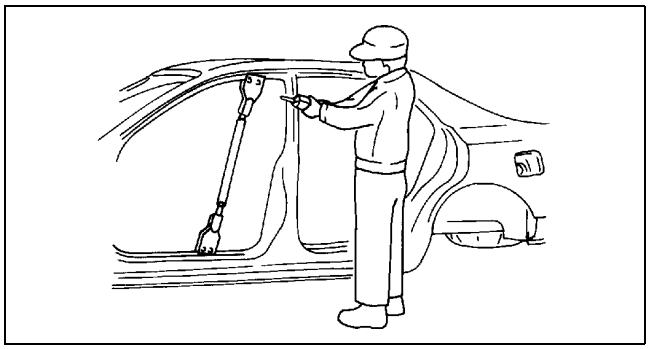

MZJ2038B002

Selection of Cut-and-join Locations

- For parts where complete replacement is not feasible, careful cutting and joining operations should be followed. If the location to be cut is a flat area where there is no reinforcement, the selected cutting location should be where the welding distortion will be minimal.

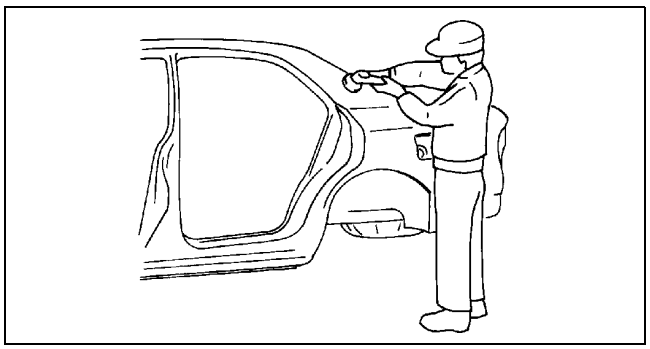

MZJ2038B003

Remove of Associated Parts

- Protect moldings, garnishes, and ornaments with tape when removing associated parts.

Rough Cutting of Damaged Panel

- Verify that there are no parts (such as pipes, hoses, and wiring harness) nearby or on the opposite side of a panel which could be damaged by heat.
- For cut-and-join areas, allow for an overlap of 30—50 mm {1.18—1.97 in} and then rough-cut the damaged panel.

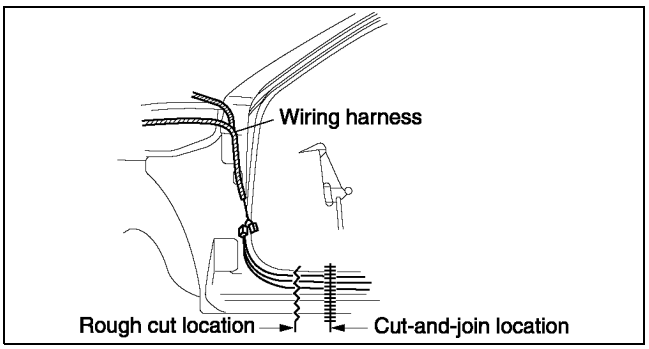

MZZ2038B001

INSTALLATION PREPARATIONS

A6E203800026B02

Rough Cutting of New Parts

- For cut-and-join areas, allow for an overlap of 30—50 mm {1.18—1.97 in} with the remaining area on the body side and then rough-cut the new parts.

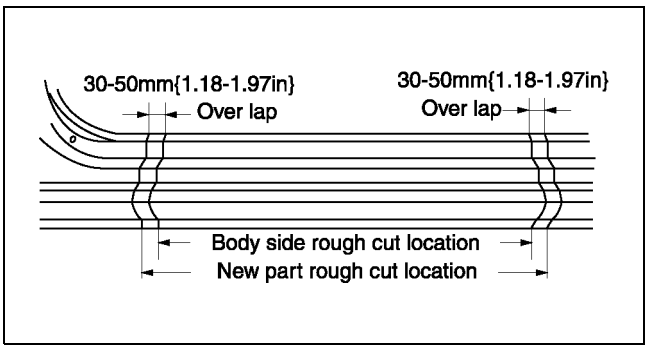

MZZ2038B002

Determination of Welding Method

- If the total thickness at the area to be welded is 3 mm {0.12 in} or more, use a CO_2 gas shielded-arc welder to make the plug welds.

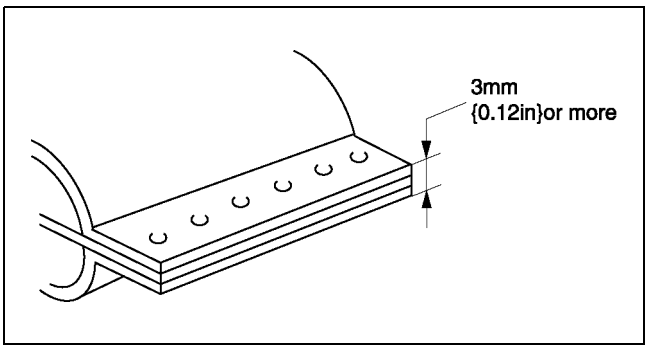

MZZ2038B003

Making Holes for CO_2 Arc Welding

- For places that cannot be spot welded, make a hole for CO_2 arc welding using a punch or drill as follows.

(mm {in})

Board thickness (ø)	Hole diameter (ø)
0.60—0.90 {0.02—0.03}	5 {0.19}
0.91—1.20 {0.04—0.05}	6 {0.23}
1.21—1.80 {0.051—0.07}	8 {0.31}
1.81—4.50 {0.071—0.17}	10 {0.39}

- Grind the shaded section indicated in the diagram below and create a hole in the part where the 3—4 plates are put together. Also, weld the plates together tightly so that gaps do not develop.

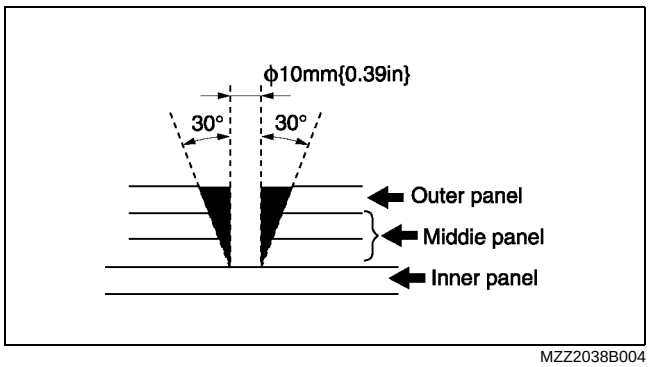

MZZ2038B004

Application of Weld-through Primer

- For treatment against corrosion, remove the paint grease, and other material from the portion of new part and body to be welded, and apply weld-through primer.

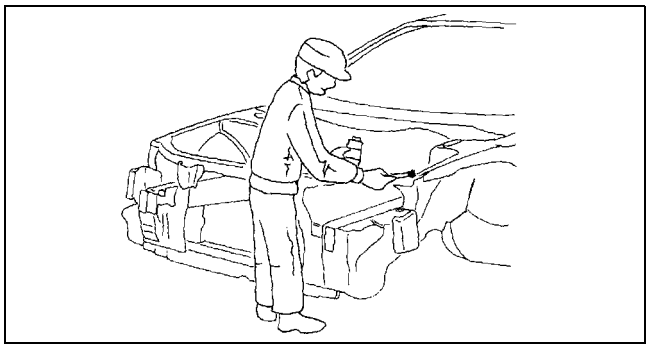

MZJ2038B008

EFFICIENT INSTALLATION OF BODY PANELS

A6E203800026B03

Checking Preweld Measurements And Watching

- Align to the standard reference dimensions, based upon the body dimensions illustration, so that new parts are installed in the correct position.

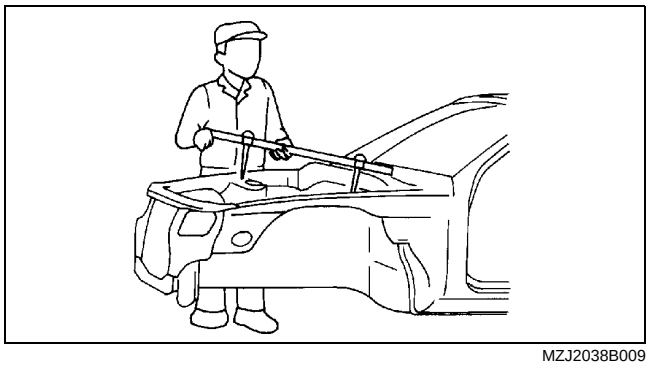

MZJ2038B009

Welding Notes

- For the number of weld points, welding should be performed in accordance with the following reference standards.

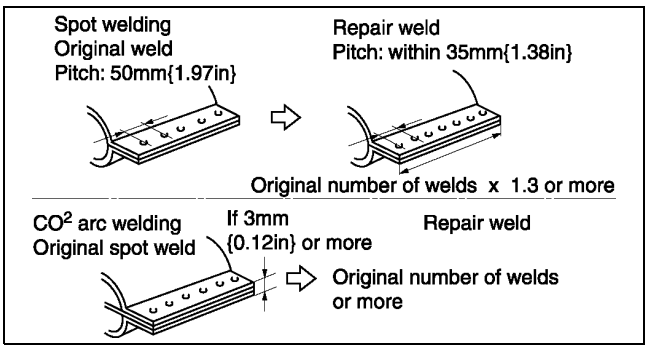

MZZ2038B005

Spot Welding Notes

- The shape of the spot welder tip is D=(2×t)+3. If the upper panel thickness is different from that of the under panel, adjust to the thinner one.

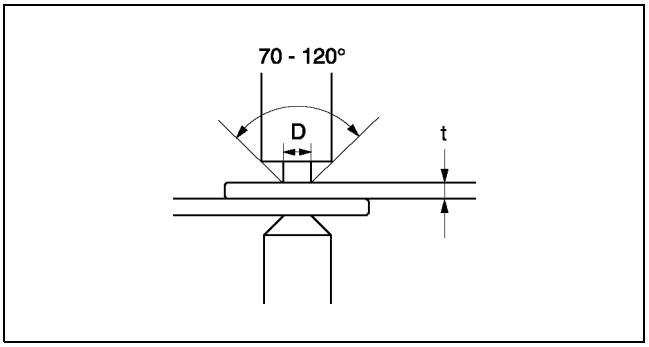

MZZ2038B009

- Because the weld strength is affected by the shape of the spot welder tip, the optimum condition of the tip should always be maintained.
- Spot welds should be made at points other than the originally welded points.

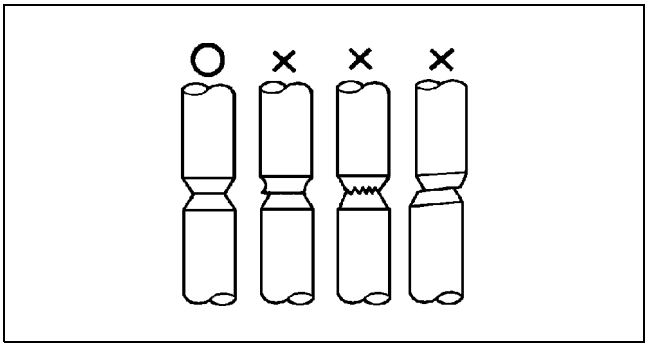

MZJ2038B012

- Before spot welding, make a trial weld using the same material as the body panel to check the weld strength.

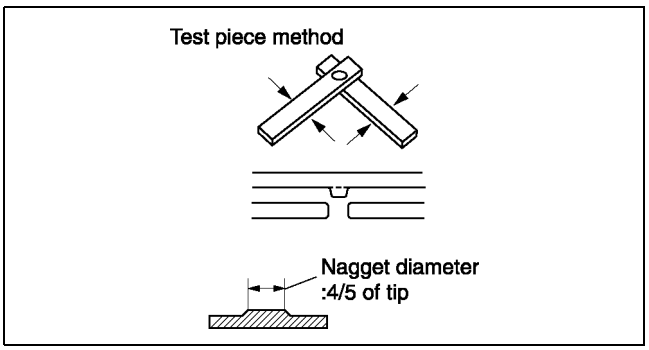

MZZ2038B006

Checking Weld Strength

- Installation locations of the engine, chassis, and seat belts are designated as important safety locations for weld strength. Check weld strength by driving a chisel between the panels at every fourth or fifth weld spot, and every tenth regular weld location.

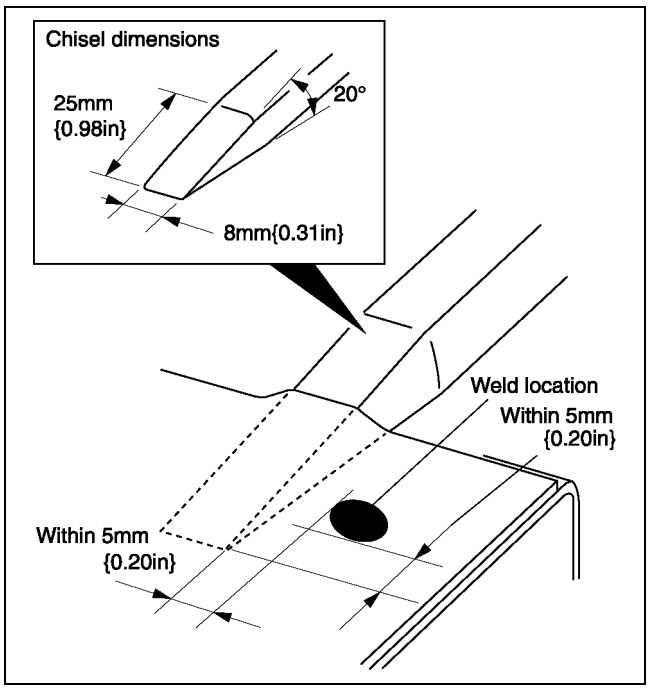

MZZ2038B007

- Drive the chisel between the panels according to the number of panels as shown below.
- To determine weld strength, drive the chisel between the panel and check whether the panels come apart. If the panels come apart, make another weld near the original weld.
- Restore the shape of the checked area.

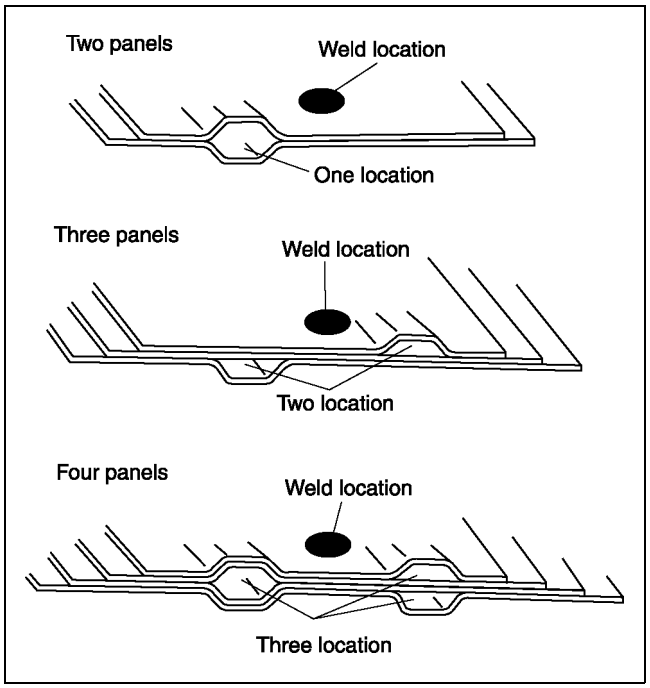

MZZ2038B008

AFTER-INSTALLATION RUST PROOFING, NOISE AND VIBRATION INSULATING

A6E203800026B04

Body Sealing

- Apply body sealer where necessary.
- For locations where application of body sealer is difficult after installation, apply it before installation.

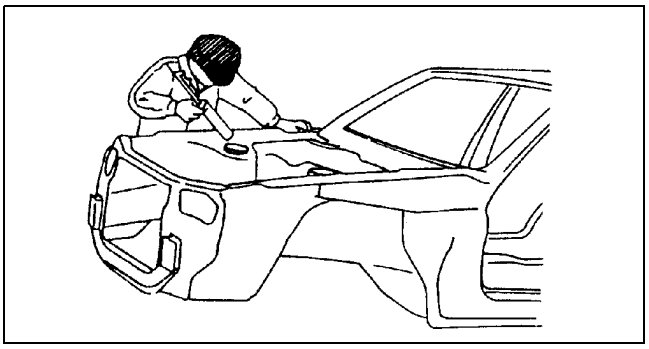

MZJ2038B016

Application of Undercoating

- Apply an undercoat to the required location of the body.

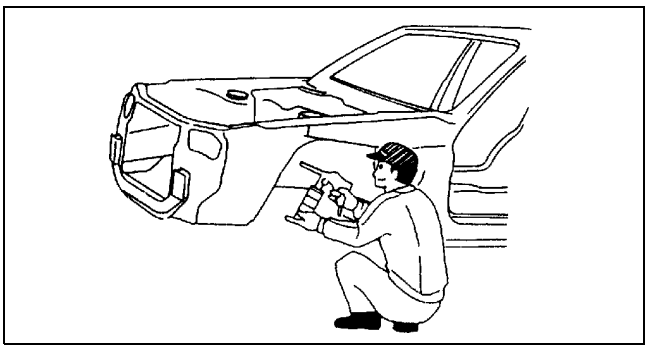

MZJ2038B017

Application of Rust Inhibitor

- Apply rust inhibitor (wax, oil, etc.) to the back of the welded areas.

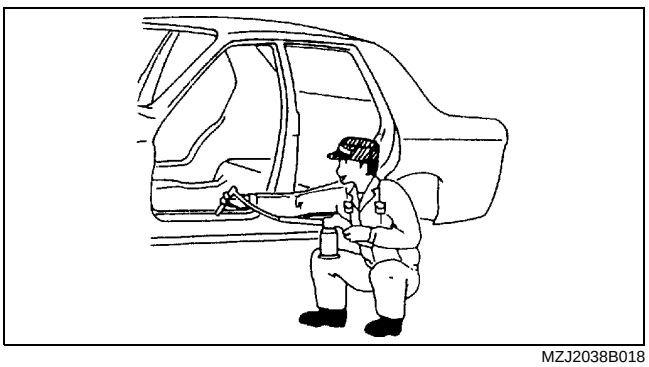

MZJ2038B018

Application of Floor Silencer

- Apply floor silencer by heating with an infrared ray lamp.

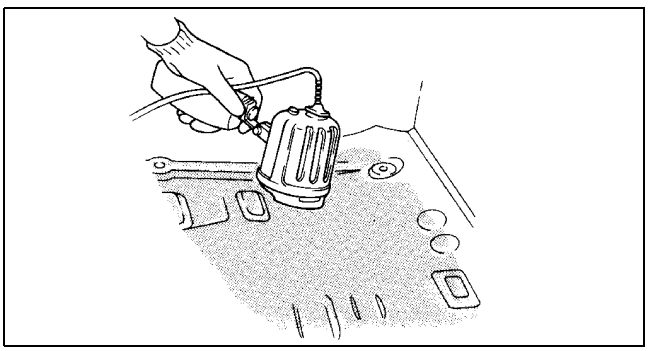

MZJ2038B019

ABBREVIATION

5HB	Five-door hatchback
Fr	Front
Rr	Rear
RH	Right
LH	Left
M	Metallic
MC	Mica

CONSTRUCTION

CONSTRUCTION II-2
CONSTRUCTION II-2

CONSTRUCTION

CONSTRUCTION

A6E981007000B01

SEDAN

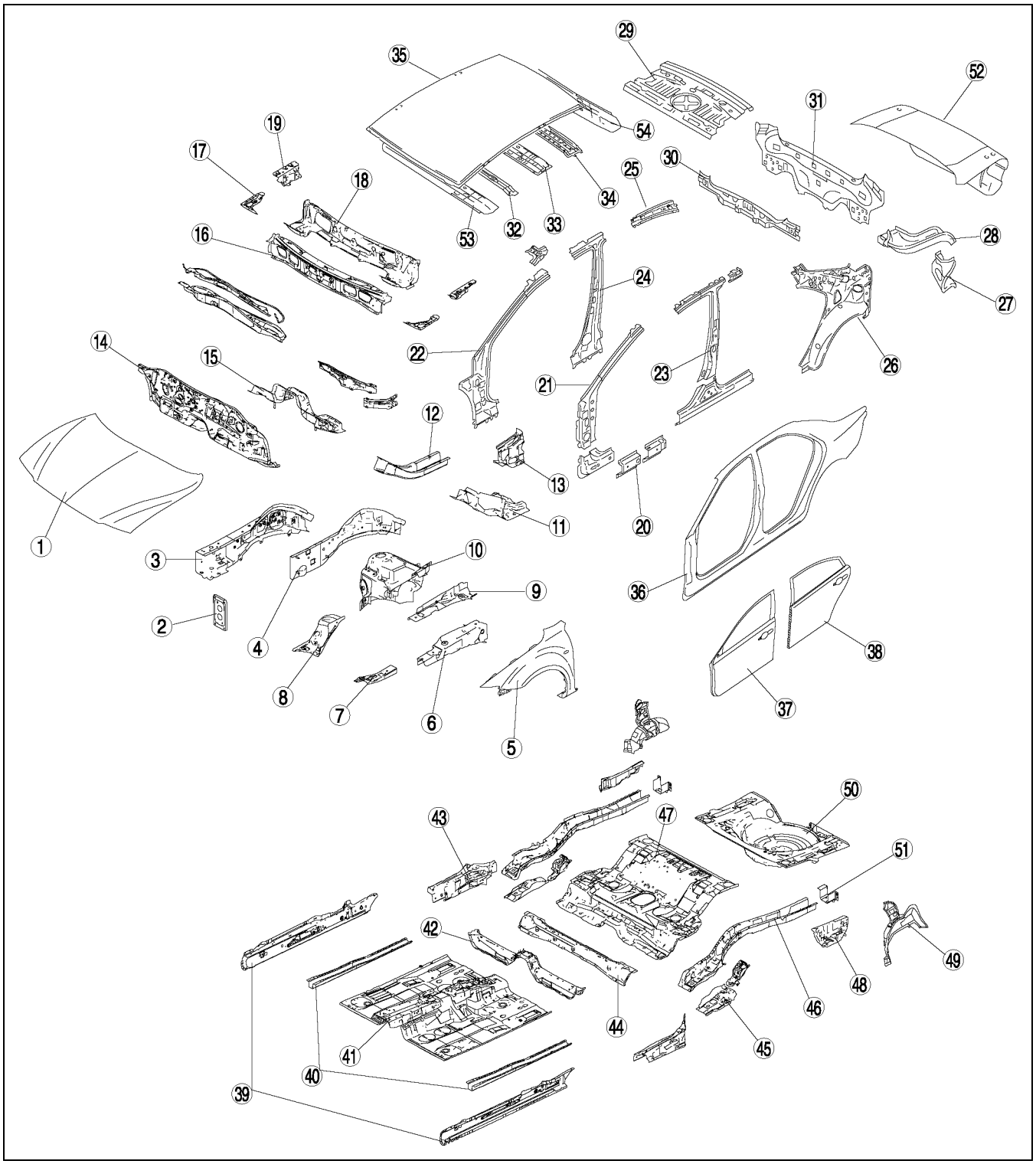

A6J9810B001

x:Applied
-:Not applied

No.	Part Name		High-tension steel	Rust proof steel	Thickness (mm) {in}
1	Bonnet		x	x	0.7{0.028}
2	Front bumper bracket		-	-	2.9{0.114}
3	Front side frame inner	Fr	x	x	1.6{0.063}
		Rr	x	x	2.6{0.102}
4	Front side frame outer	Fr	x	x	1.4{0.055}
		Rr	x	x	2.0{0.079}
5	Front fender panel		x	x	0.75 {0.030}
6	Apron reinforcement upper		-	x	1.0 {0.039}
7	Shroud upper reinforcement		-	x	2.0{0.079}
8	Wheel apron panel front		-	x	0.65 {0.026}
9	Apron reinforcement lower		-	x	1.0 {0.039}
10	Suspension housing	Upper	x	x	3.2{0.126}
		Lower	-	x	1.2{0.047}
11	Torque box		-	x	1.4{0.055}
12	Front frame rear		x	x	2.9{0.114}
13	Cowl side reinforcement		-	x	1.2 {0.047}
14	Dash lower panel		-	x	0.85 {0.033}
15	Member dash lower		-	x	1.6{0.063}
16	Cowl panel		-	x	0.7{0.028}
17	Cowl upper plate		-	x	1.6{0.063}
18	Dash upper panel		-	x	0.9{0.035}
19	Cowl upper plate		x	x	1.4{0.055}
20	Side sill reinforcement		x	x	0.9 {0.035}
21	Front pillar reinforcement		x	-	1.8 {0.071}
22	Front pillar inner	Upper	x	-	1.6{0.063}
		Lower	x	-	1.4{0.055}
23	Center pillar reinforcement	Upper front	x	-	1.8{0.071}
		Upper rear	x	-	1.6{0.063}
		Center	x	-	2.0{0.079}
		Lower	x	-	1.8 {0.071}
24	Center pillar inner	Upper	x	-	1.6{0.063}
		Center	x	-	1.2{0.047}
		Lower	x	-	1.0{0.039}

No.	Part Name		High-tension steel	Rust proof steel	Thickness (mm) {in}
25	Roof rail inner		x	-	1.2{0.047}
26	Rear pillar inner		-	x	0.65 {0.026}
27	Corner plate		-	x	0.7{0.028}
28	Rear fender rain rail		-	x	0.7{0.028}
29	Package tray		-	-	0.65 {0.026}
30	Rear end member		-	-	0.6{0.024}
31	Rear end panel		-	x	0.65 {0.026}
32	Roof reinforcement		-	-	0.5{0.020}
33	Roof reinforcement		x	-	1.4{0.055}
34	Roof reinforcement		-	-	0.55 {0.022}
35	Roof panel		-	-	0.75 {0.030}
36	Side frame outer		-	x	0.7{0.028}
37	Front door		-	x	0.7{0.028}
38	Rear door		-	x	0.7{0.028}
39	Side sill inner		x	x	1.6{0.063}
40	Front B frame	Fr	x	x	2.3{0.091}
		Rr	-	x	1.6{0.063}
41	Front floor pan		-	x	0.65 {0.026}
42	Crossmember No.2		-	-	1.2{0.047}
43	Side sill inner rear		x	x	1.6{0.063}
44	Crossmember No.3		x	-	1.4{0.055}
45	Link bracket		x	x	2.3 {0.091}
46	Rear side frame	Fr	x	x	1.8{0.071}
		Rr	x	x	1.4{0.055}
47	Center floor pan		-	x	0.6{0.024}
48	Floor side panel		-	x	0.6{0.024}
49	Wheel house inner		-	x	0.75 {0.030}
50	Rear floor pan		-	x	0.65{0.26}
51	Rear bumper bracket	LH	x	x	2.0{0.079}
		RH	x	x	1.4{0.055}
52	Trunk lid panel		-	x	0.75 {0.030}
53	Front header		-	-	1.2{0.047}
54	Rear header		-	-	0.65 {0.026}

5HB

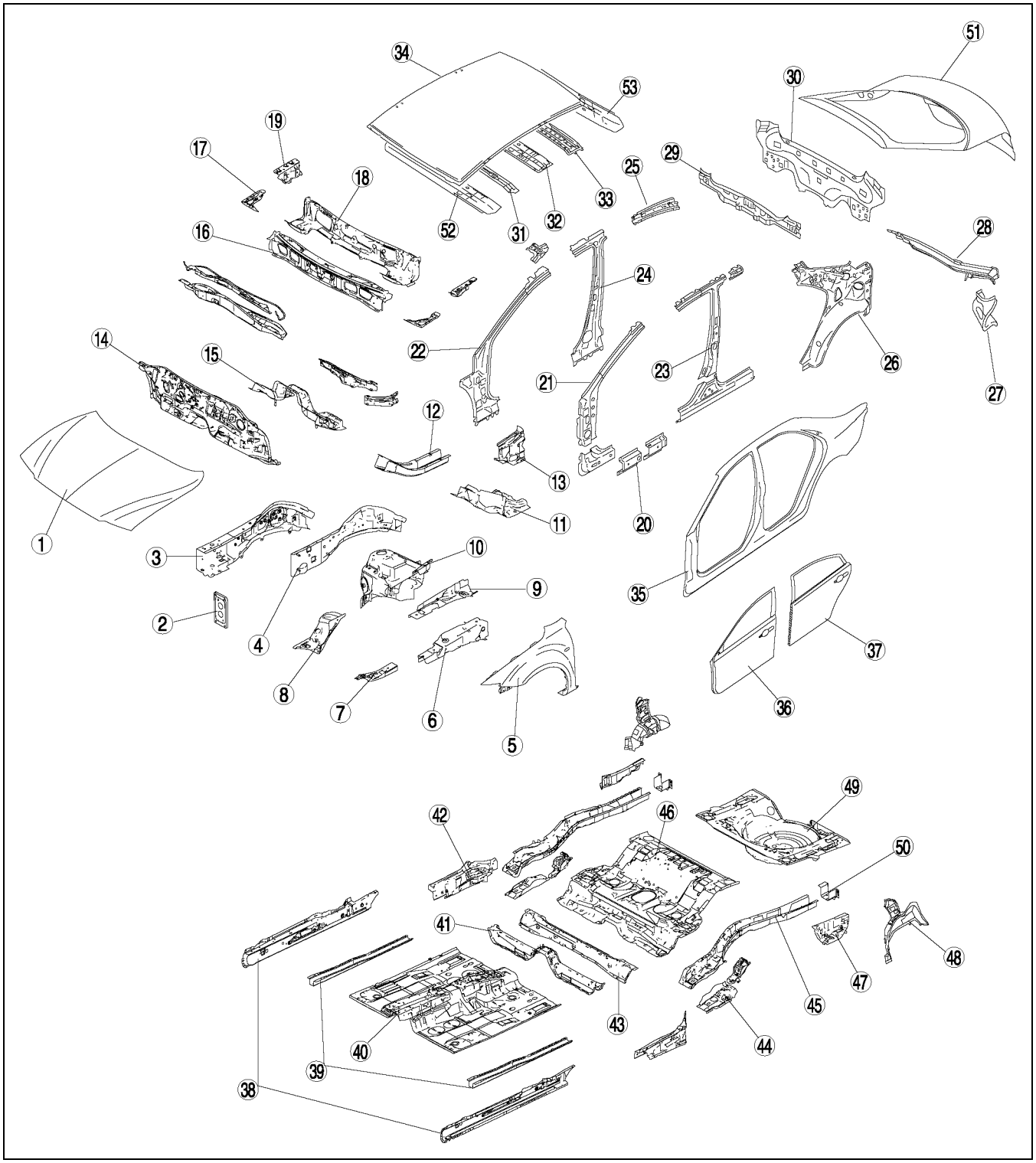

A6J9810B002

x:Applied
-:Not applied

No.	Part Name		High-tension steel	Rust proof steel	Thickness (mm) {in}
1	Bonnet		x	x	0.7{0.028}
2	Front bumper bracket		-	-	2.9{0.114}
3	Front side frame inner	Fr	x	x	1.6{0.063}
		Rr	x	x	2.6{0.102}
4	Front side frame outer	Fr	x	x	1.4{0.055}
		Rr	x	x	2.0{0.079}
5	Front fender panel		x	x	0.75 {0.030}
6	Apron reinforcement upper		-	x	1.0 {0.039}
7	Shroud upper reinforcement		-	x	2.0 {0.079}
8	Wheel apron panel front		-	x	0.65 {0.026}
9	Apron reinforcement lower		-	x	1.0 {0.039}
10	Suspension housing	Upper	x	x	3.2{0.126}
		Lower	-	x	1.2{0.047}
11	Torque box		-	x	1.4{0.055}
12	Front frame rear		x	x	2.9{0.114}
13	Cowl side reinforcement		-	x	1.2 {0.047}
14	Dash lower panel		-	x	0.85 {0.033}
15	Member dash lower		-	x	1.6{0.063}
16	Cowl panel		-	x	0.7{0.028}
17	Cowl upper plate		-	x	1.6{0.063}
18	Dash upper panel		-	x	0.9{0.035}
19	Cowl upper plate		x	x	1.4{0.055}
20	Side sill reinforcement		x	x	0.9 {0.035}
21	Front pillar reinforcement		x	-	1.8 {0.071}
22	Front pillar inner	Upper	x	-	1.6{0.063}
		Lower	x	-	1.4{0.055}
23	Center pillar reinforcement	Upper front	x	-	1.8{0.071}
		Upper rear	x	-	1.6{0.063}
		Center	x	-	2.0{0.079}
		Lower	x	-	1.8 {0.071}
24	Center pillar inner	Upper	x	-	1.6{0.063}
		Center	x	-	1.2{0.047}
		Lower	x	-	1.0{0.039}

No.	Part Name		High-tension steel	Rust proof steel	Thickness (mm) {in}
25	Roof rail inner		x	-	1.2{0.047}
26	Rear pillar inner		-	x	0.65 {0.026}
27	Corner plate		-	x	0.7{0.028}
28	Rear fender rain rail		-	x	0.8{0.031}
29	Rear end member		-	-	0.6{0.024}
30	Rear end panel		-	x	0.65 {0.026}
31	Roof reinforcement		-	-	0.5{0.020}
32	Roof reinforcement		x	-	1.4{0.055}
33	Roof reinforcement		-	-	0.55 {0.022}
34	Roof panel		-	-	0.75 {0.030}
35	Side frame outer		-	x	0.7{0.028}
36	Front door		-	x	0.7{0.028}
37	Rear door		-	x	0.7{0.028}
38	Side sill inner		x	x	1.6{0.063}
39	Front B frame	Fr	x	x	2.3{0.091}
		Rr	-	x	1.6{0.063}
40	Front floor pan		-	x	0.65 {0.026}
41	Crossmember No.2		-	-	1.2{0.047}
42	Side sill inner rear		x	x	1.6{0.063}
43	Crossmember No.3		x	-	1.4{0.055}
44	Link bracket		x	x	2.3 {0.091}
45	Rear side frame	Fr	x	x	1.8{0.071}
		Rr	x	x	1.4{0.055}
46	Center floor pan		-	x	0.6{0.024}
47	Floor side panel		-	x	0.6{0.024}
48	Wheel house inner		-	x	0.75 {0.030}
49	Rear floor pan		-	x	0.65 {0.026}
50	Rear bumper bracket	LH	x	x	2.0{0.079}
		RH	x	x	1.4{0.055}
51	Liftgate panel		-	x	0.7{0.028}
52	Front header		-	-	1.2{0.047}
53	Rear header	Center	-	-	0.7 {0.028}
		Side	-	-	1.4{0.055}

PANEL REPLACEMENT

PANEL REPLACEMENT..... III-2
SHROUD UPPER REINFORCEMENT REMOVAL..... III-2
SHROUD UPPER RAINFORCEMENT INSTALLATION..... III-3
COWL SIDE REINFORCEMENT AND COWL UPPER PLATE REMOVAL..... III-4
COWL SIDE REINFORCEMENT AND COWL UPPER PLATE INSTALLATION..... III-5
APRON REINFORCEMENT ASSEMBLY REMOVAL..... .III-6
APRON REINFORCEMENT ASSEMBLY INSTALLATION..... III-7
WHEEL APRON PANEL ASSEMBLY REMOVAL..... III-8
WHEEL APRON PANEL ASSEMBLY INSTALLATION..... III-9
FRONT SIDE FRAME REMOVAL III-10
FRONT SIDE FRAME INSTALLATION III-11
FRONT PILLAR REMOVAL..... III-12
FRONT PILLAR INSTALLATION..... III-14
CENTER PILLAR REMOVAL III-16
CENTER PILLAR INSTALLATION III-17
REAR FENDER PANEL REMOVAL..... III-18
REAR FENDER PANEL INSTALLATION..... III-20
SIDE SILL PANEL REMOVAL..... III-22
SIDE SILL PANEL INSTALLATION..... III-23
REAR END PANEL REMOVAL III-24
REAR END PANEL INSTALLATION III-26
REAR FENDER RAIN RAIL AND CORNER PLATE REMOVAL III-28
REAR FENDER RAIN RAIL AND CORNER PLATE INSTALLATION III-30
REAR FLOOR PAN REMOVAL..... III-32
REAR FLOOR PAN INSTALLATION..... III-33
FLOOR SIDE PANEL REMOVAL..... III-34
FLOOR SIDE PANEL INSTALLATION..... III-36
REAR SIDE FRAME (PARTIAL CUTTING) REMOVAL..... III-38
REAR SIDE FRAME (PARTIAL CUTTING) INSTALLATION..... III-39
ROOF PANEL REMOVAL III-40
ROOF PANEL INSTALLATION III-42

For shroud panel removal/installation and replacement procedures, refer to the MAZDA6 Workshop Manual (1730-1*-02C)
***:Indicates the printing location**
E-Europe
0-Japan

PANEL REPLACEMENT

SHROUD UPPER REINFORCEMENT REMOVAL

A6E981253152B01

1. Remove the shroud upper reinforcement.

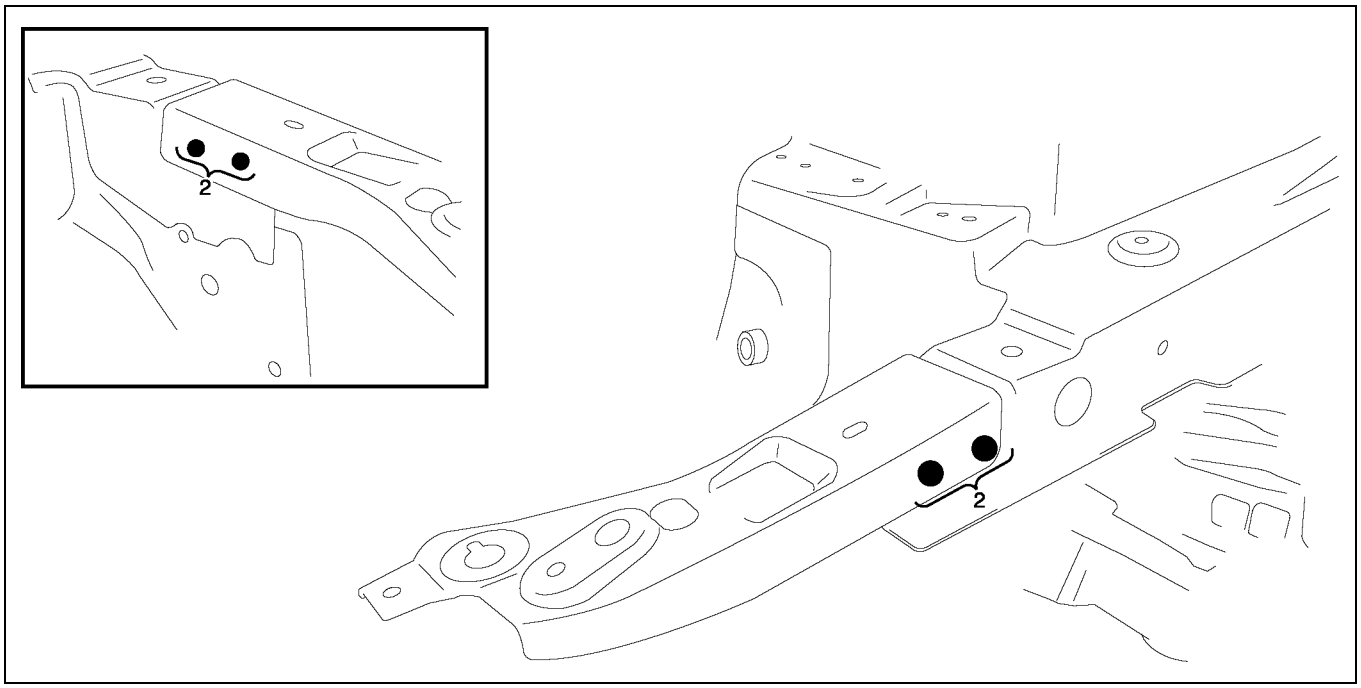

A6E9812B001

SHROUD UPPER RAINFORCEMENT INSTALLATION

A6E981253152B02

1. Drill holes for plug welds before installing new parts.
2. After trial-fitting new parts, make sure the related parts fit properly.

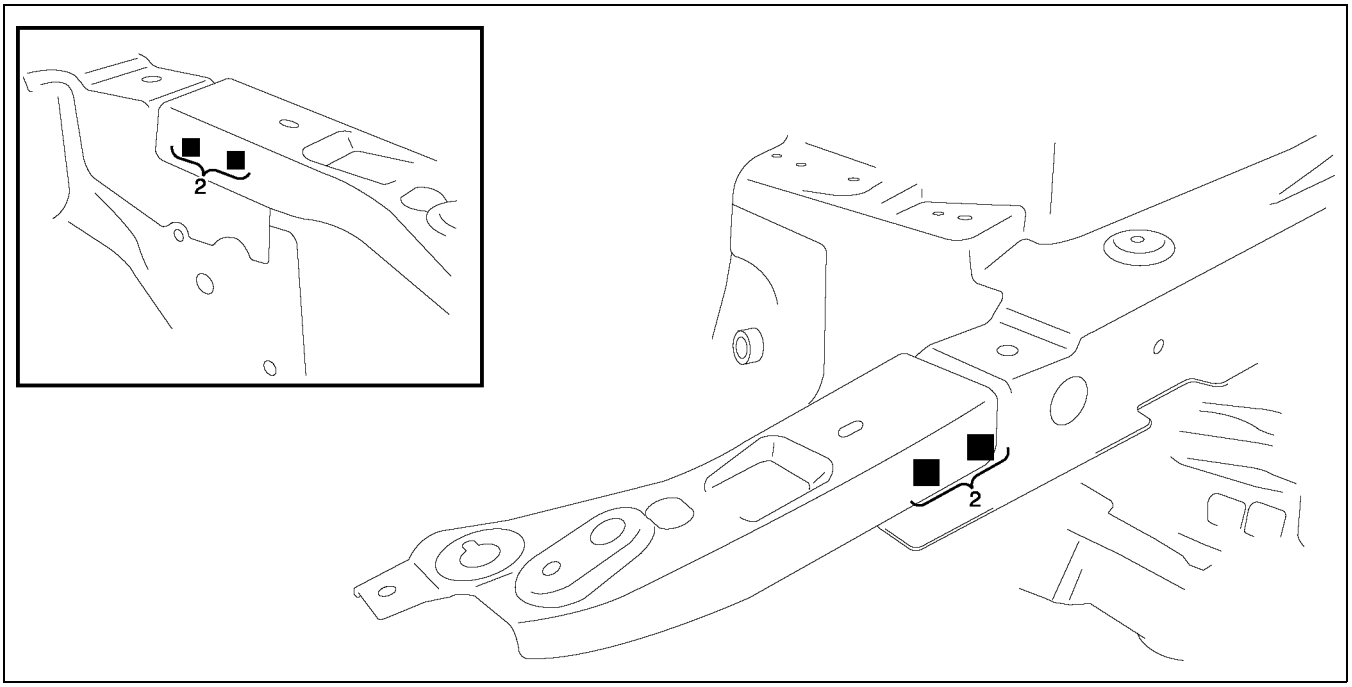

A6E9812B002

COWL SIDE REINFORCEMENT AND COWL UPPER PLATE REMOVAL

A6E981253290B01

1. Remove the cowl side reinforcement.

Note
- The weld locations (B) in the figure indicate the same locations.

Caution
- **Be careful not to damage the windshield when drilling the location indicated by (A).**

2. Remove the cowl upper plate.

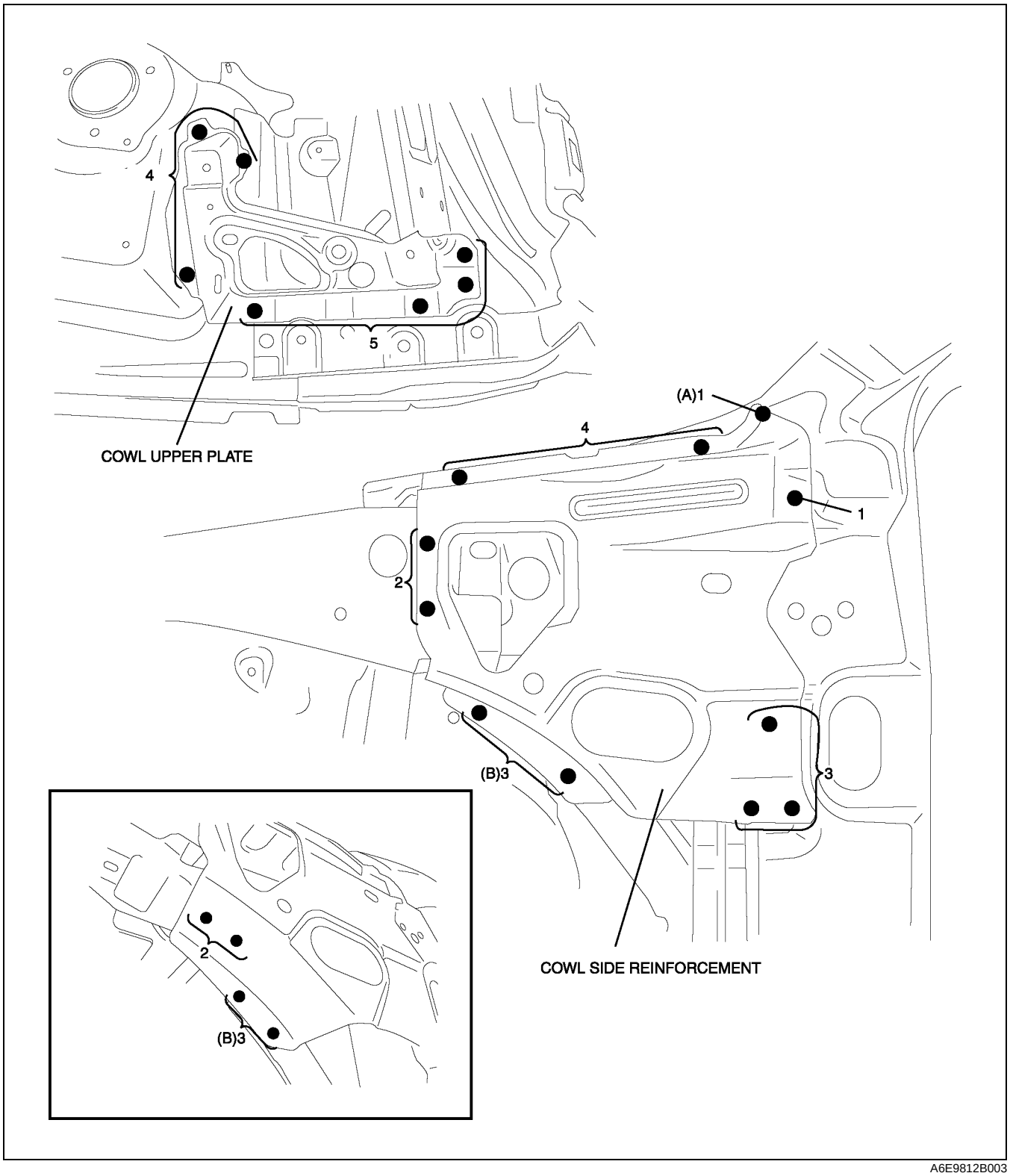

A6E9812B003

COWL SIDE REINFORCEMENT AND COWL UPPER PLATE INSTALLATION

A6E981253290B02

1. When installing new parts, position each part so that the section measurement aligns to the body dimension.
2. Drill holes for plug welds before installing new parts.
3. After trial-fitting new parts, make sure the related parts fit properly.

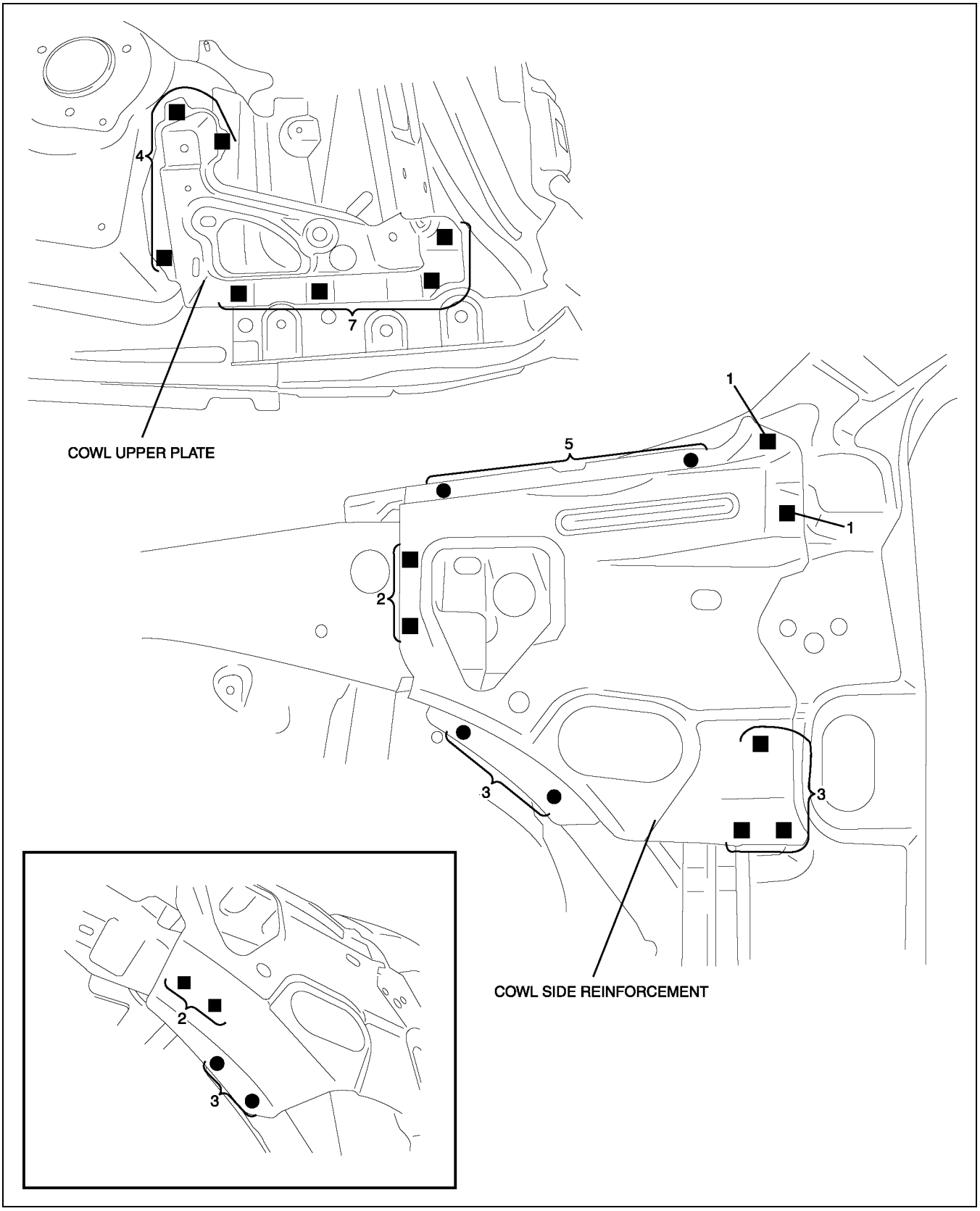

A6E9812B004

APRON REINFORCEMENT ASSEMBLY REMOVAL

A6E981253260B01

1. Rough cut the apron reinforcement upper.
2. Remove the apron reinforcement assembly.

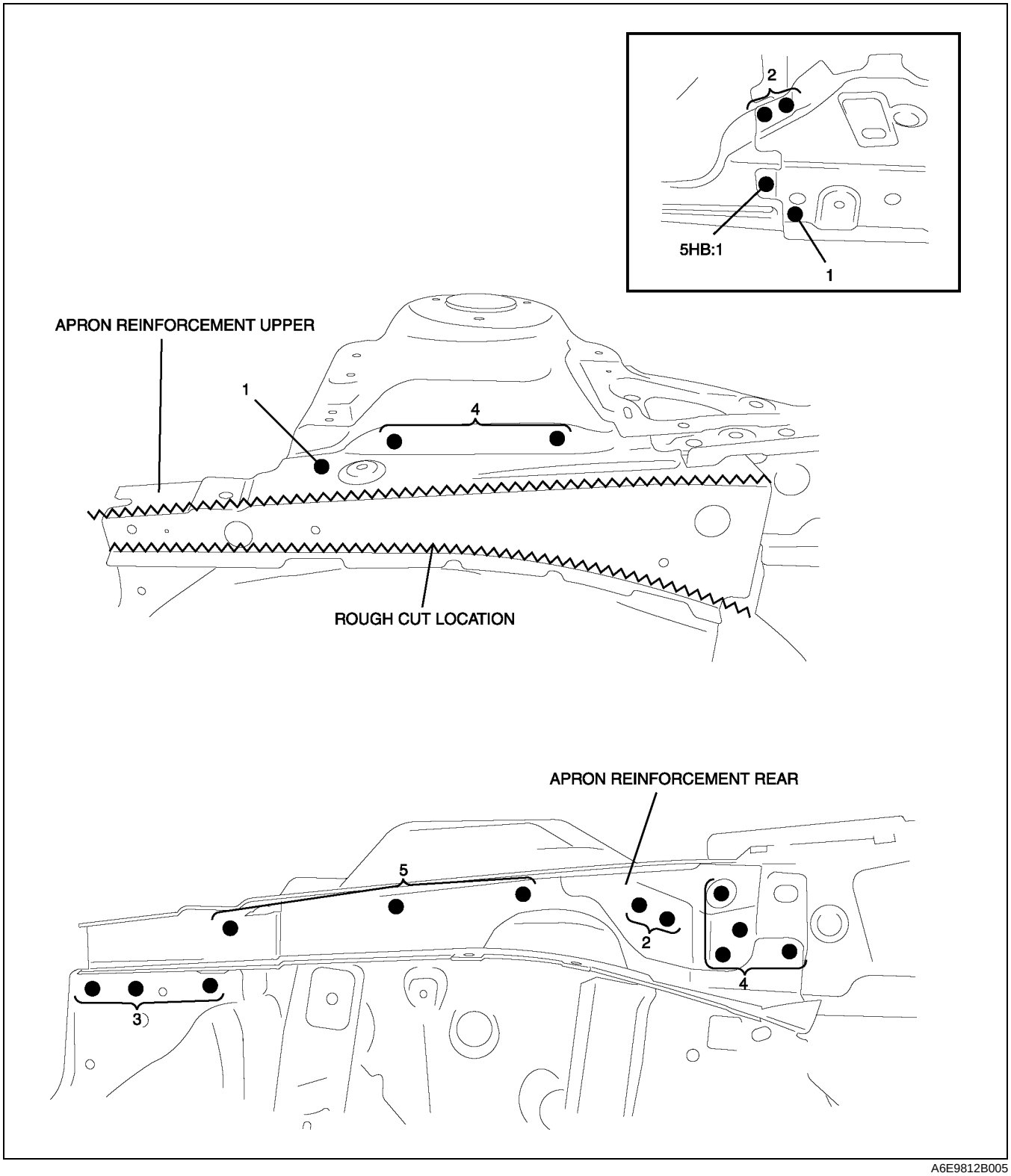

A6E9812B005

APRON REINFORCEMENT ASSEMBLY INSTALLATION

A6E981253260B02

1. When installing new parts, position each part so that the section measurement aligns to the body dimension.
2. Drill holes for plug welds before installing new parts.
3. Install in the following order: apron reinforcement lower,apron reinforcement rear, and apron reinforcement upper.

Note
- After installing, fillet weld in location (A).

Caution
- **When fillet welding, be careful of dripping, melted metal.**

4. After trial-fitting new parts, make sure the related parts fit properly.

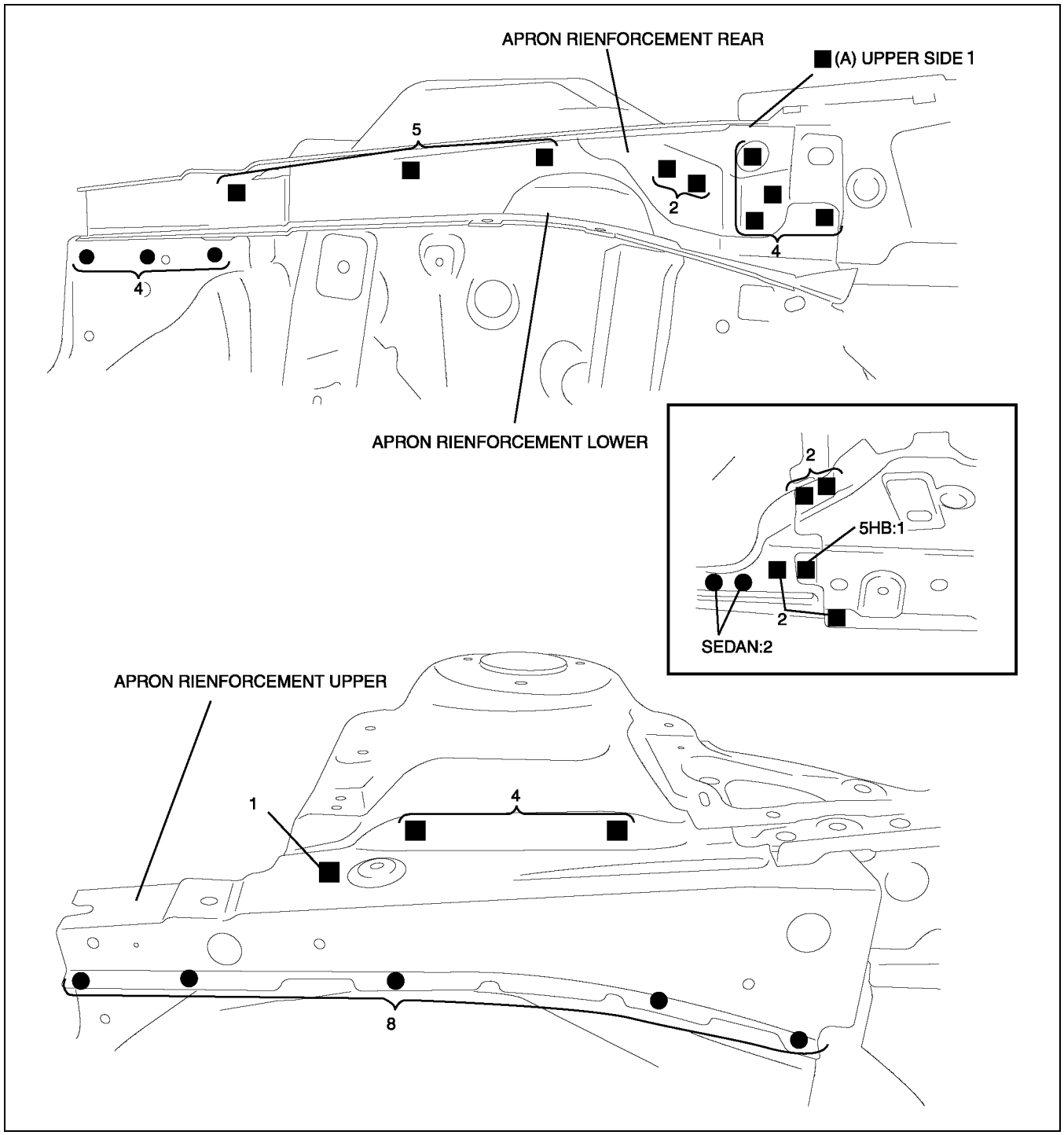

A6E9812B006

WHEEL APRON PANEL ASSEMBLY REMOVAL

A6E981253210B01

1. Drill the 26 weld locations indicated by (A), and 7 weld locations indicated by (B), remove the wheel apron panel assembly.

Note

- If removing the wheel apron panel front and the suspension housing separately as separate parts, drill 7 locations indicated by (B) and drill 6 locations indicated by (C).

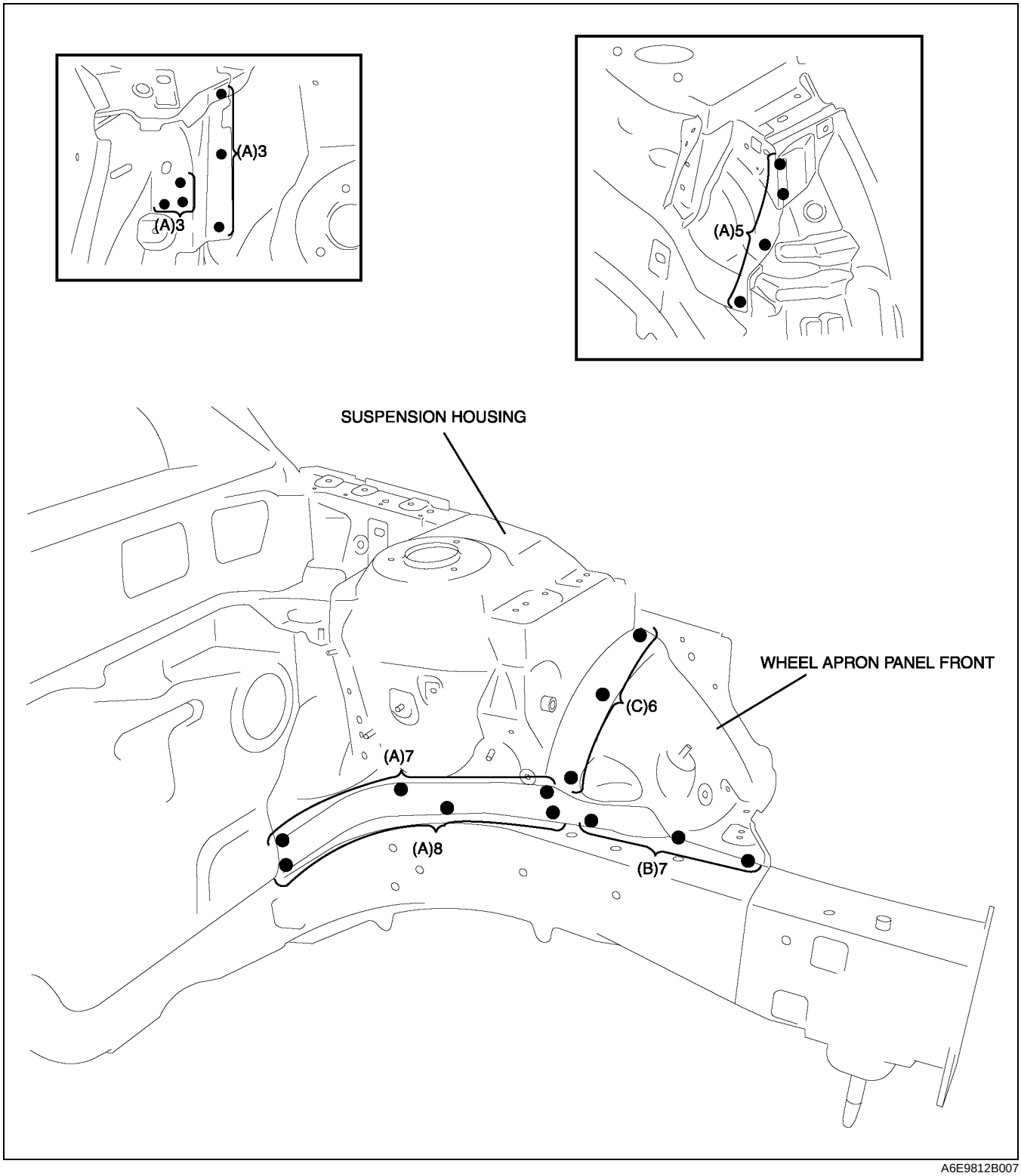

A6E9812B007

WHEEL APRON PANEL ASSEMBLY INSTALLATION

A6E981253210B02

1. When installing new parts, position each part so that the section measurement aligns to the body dimension.
2. Drill holes for plug welds before installing new parts.
3. After trial-fitting new parts, make sure the related parts fit properly.

Note

- When replacing the wheel apron panel front and the suspension housing separately, weld 6 locations indicated by (A).

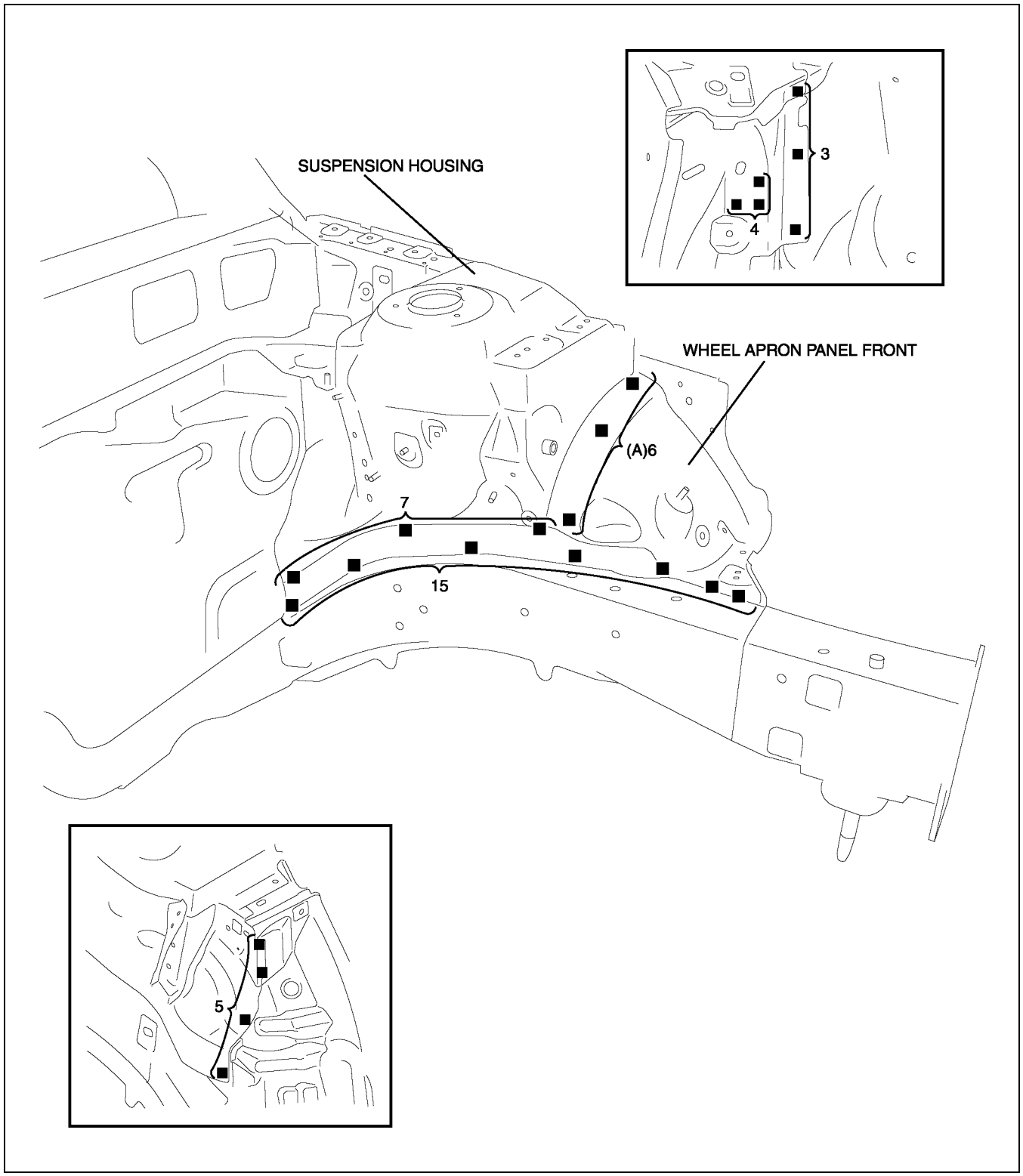

A6E9812B008

FRONT SIDE FRAME REMOVAL

A6E981253300B01

1. Remove the member side.
2. Drill the 1 weld locations indicated by (A), from the room side.
3. Drill the remaining weld locations and remove the front side frame by pulling it.

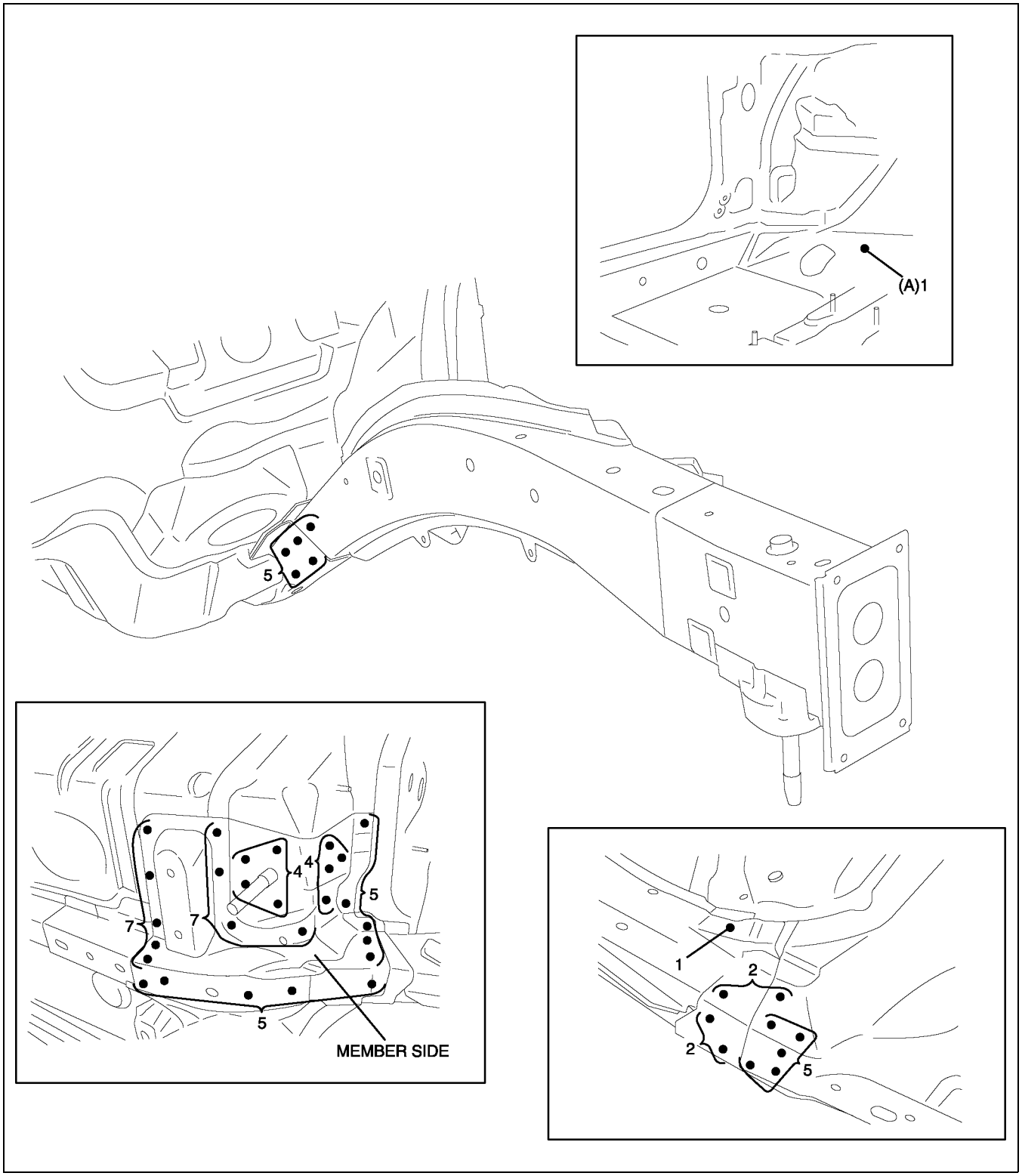

A6E9812B009

FRONT SIDE FRAME INSTALLATION

A6E981253300B02

1. When installing new parts, position each part so that the section measurement aligns to the body dimension.
2. Drill holes for plug welds before installing new parts.
3. After trial-fitting new parts, make sure the related parts fit properly.

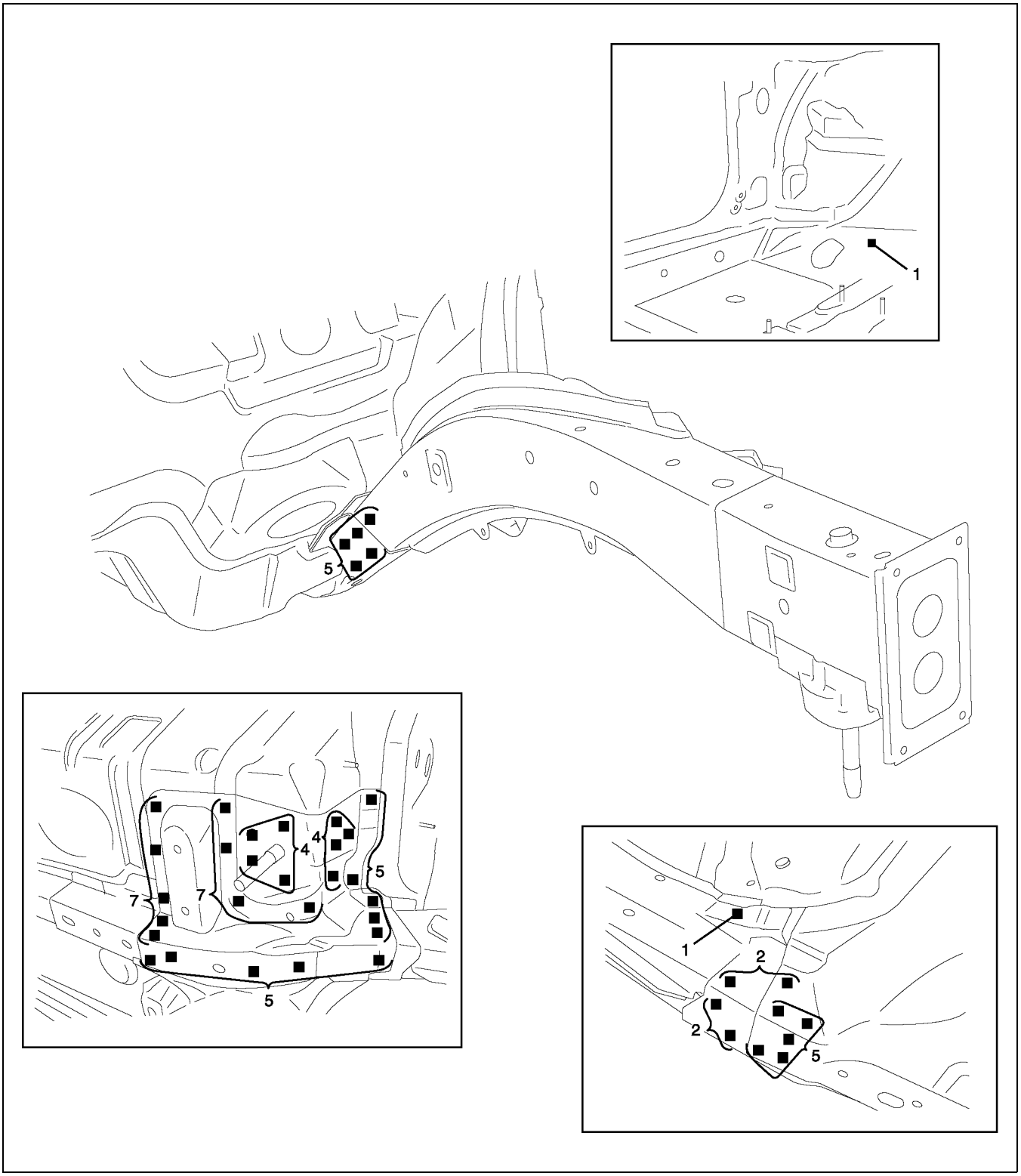

A6E9812B010

FRONT PILLAR REMOVAL

A6E981274090B01

1. Rough cut area (A), drill the 35 weld locations indicated by (B), then remove the lower part of the front pillar outer.
2. Rough cut area (C), drill the 20 weld locations indicated by (D), and 2 weld locations indicated by (E), then remove the front pillar.

Note

- If removing the front pillar reinforcement and the front pillar inner as separate parts, drill 8 locations indicated by (F) and drill 30 locations indicated by (G).

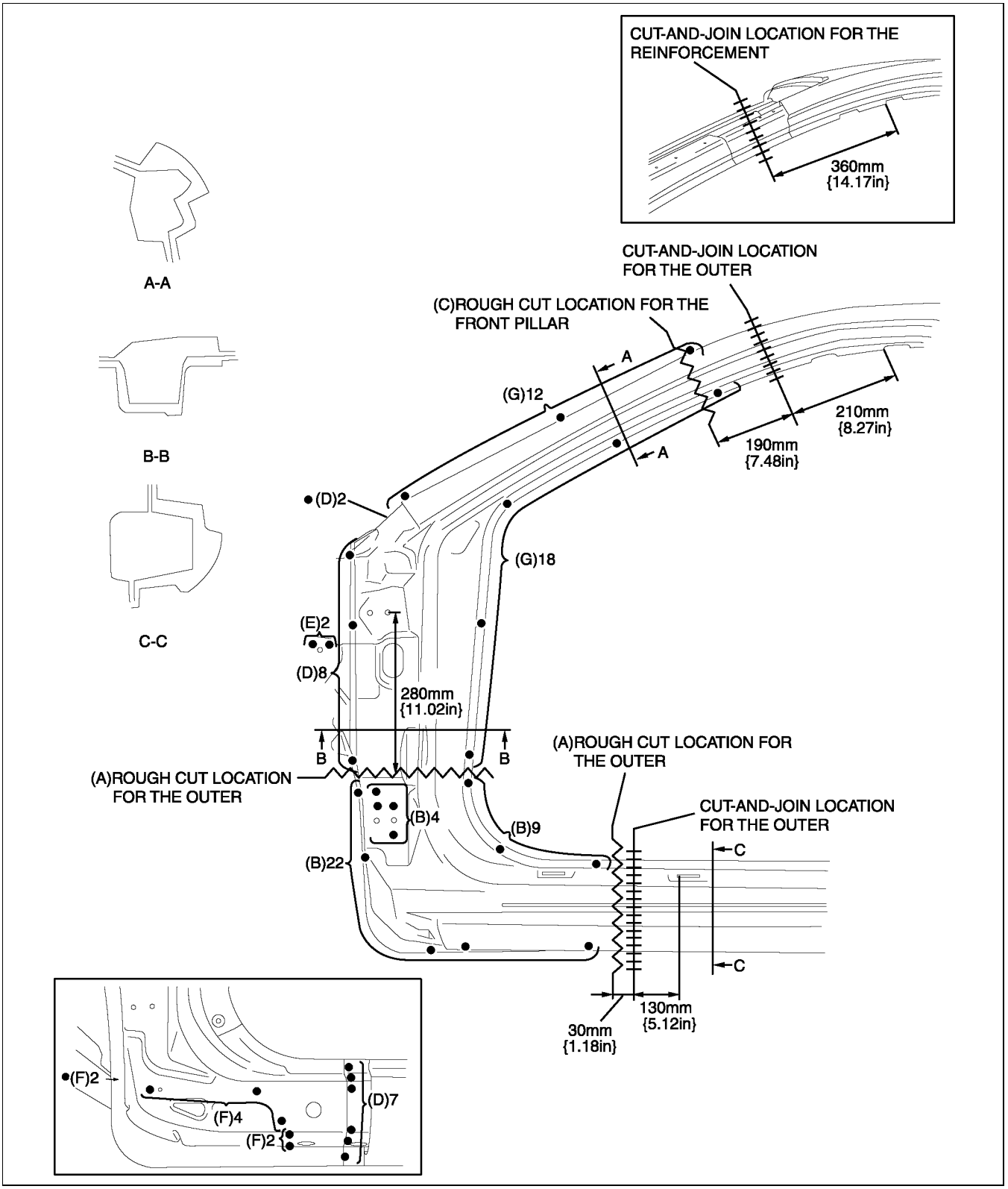

A6E9812B011

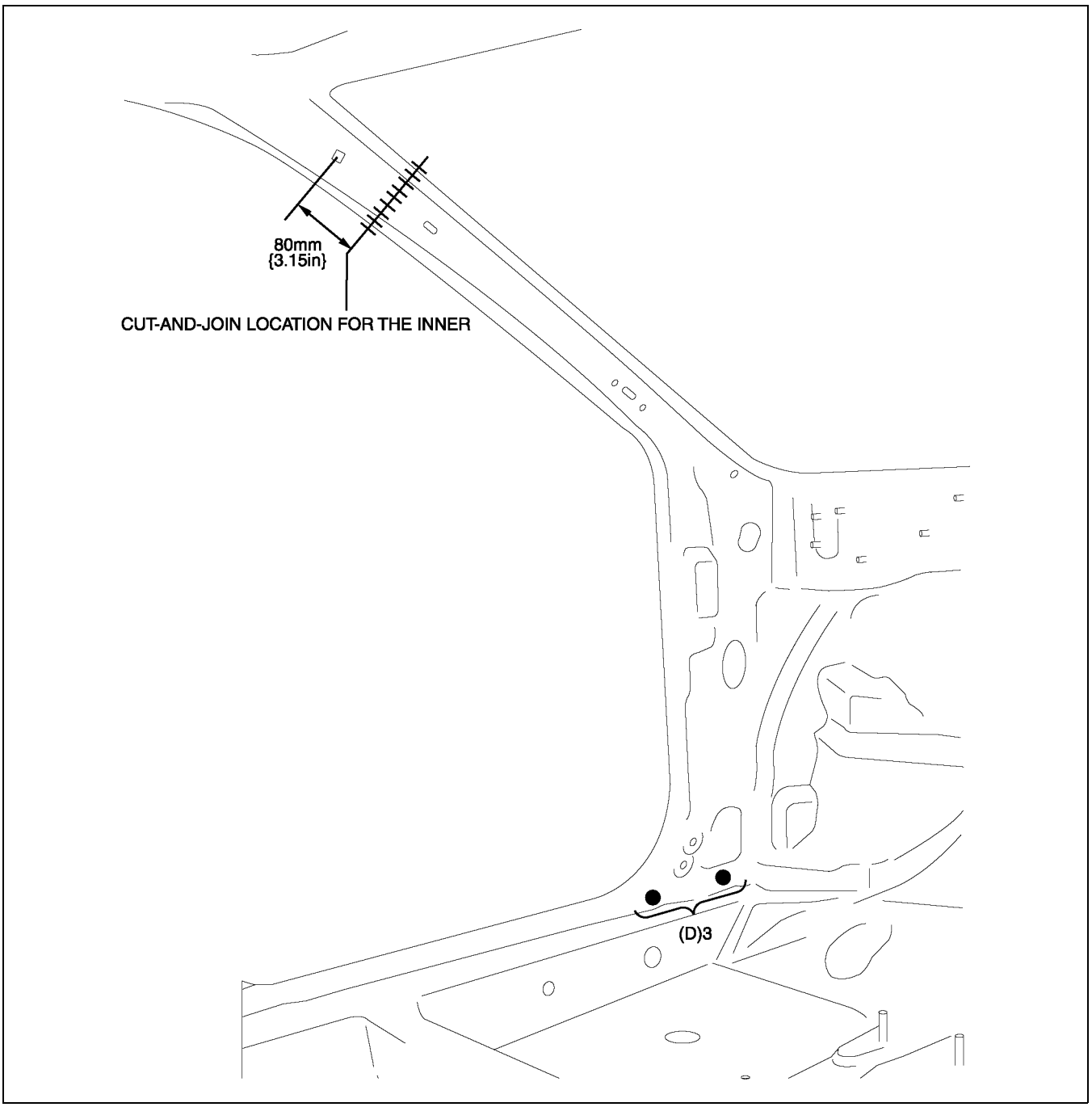

A6E9812B012

FRONT PILLAR INSTALLATION

A6E981274090B02

1. When joining the new and old parts, temporarily install and fit the new part in position, measure each dimension according to the body dimension, then adjust the position to align it to the standard dimensions.
2. Drill holes for plug welds before installing new parts.

Note

- In areas where the outer, reinforcement, inner, etc. are in 3-4 layers, drill holes for plug welds in all but the innermost panel.

3. Weld in 5 locations indicated by (A), then trial-fit the inner and reinforcement.
4. Weld in 10 locations indicated by (B), then install the inner and reinforcement to the existing parts.
5. After trial-fitting new parts, make sure the related parts fit properly.

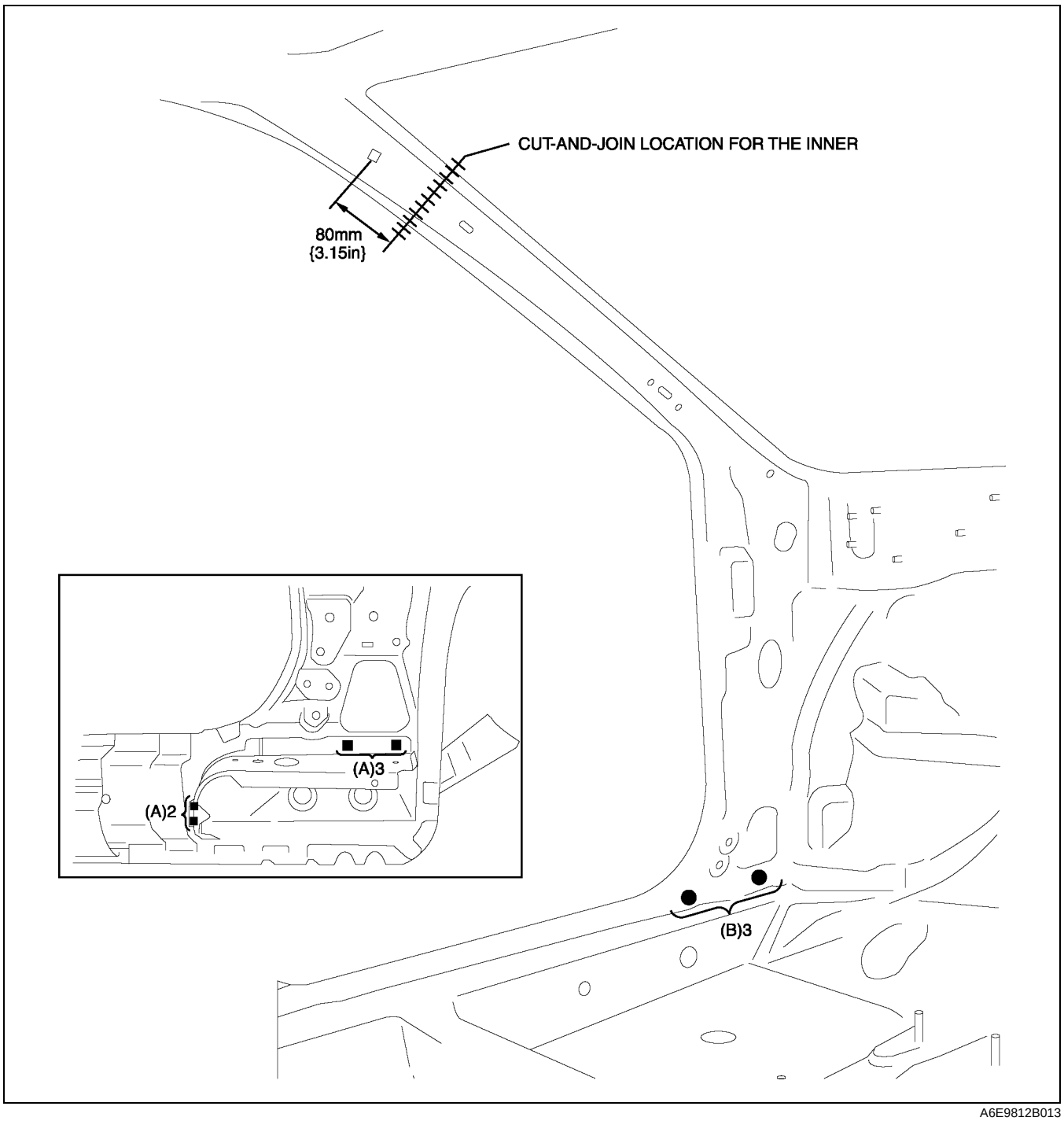

A6E9812B013

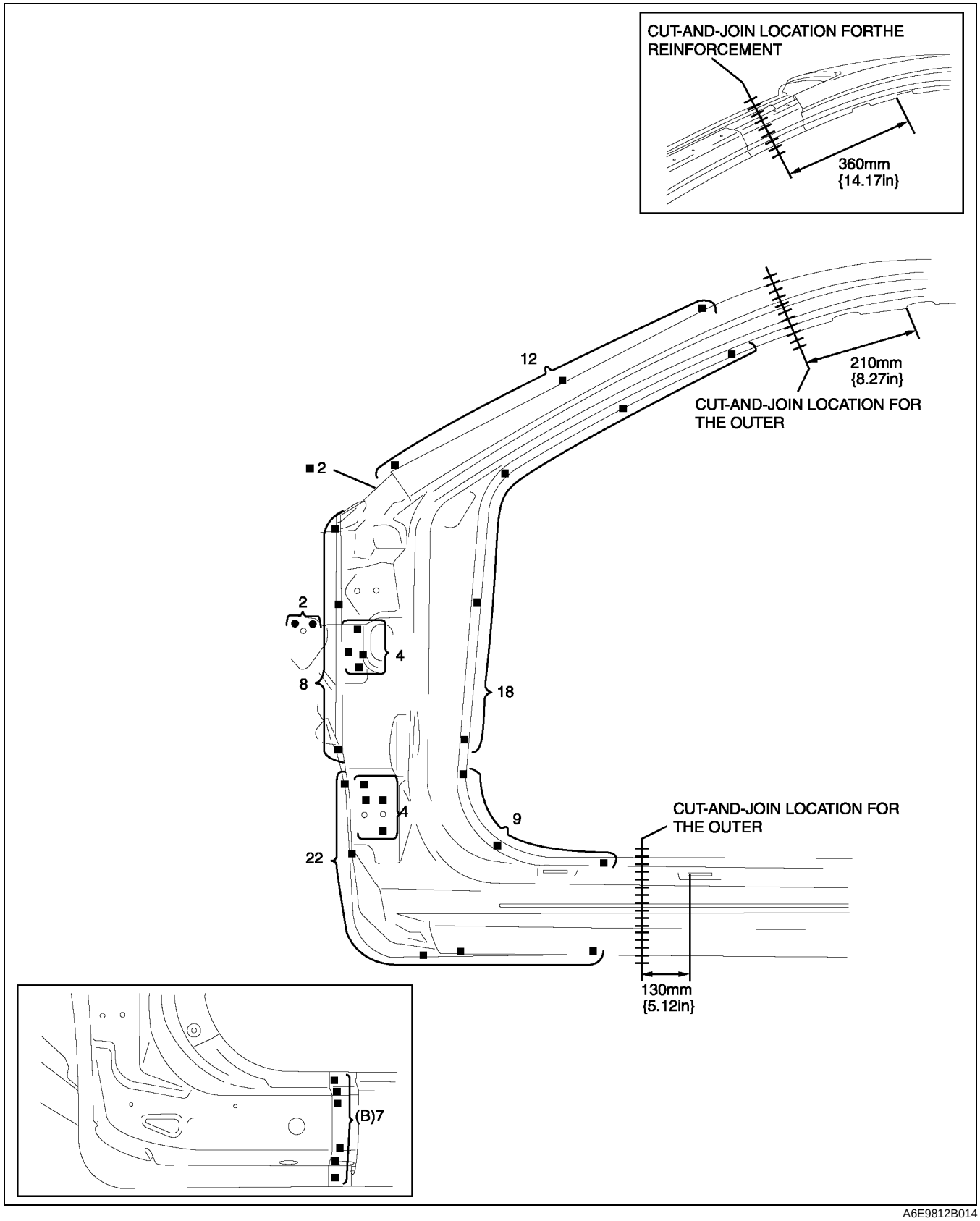

A6E9812B014

CENTER PILLAR REMOVAL

A6E981270350B01

1. Rough cut area (A), drill the 44 weld locations indicated by (B), then remove the lower part of the center pillar outer.
2. Rough cut area (C), drill the 20 weld locations indicated by (D), then remove the center pillar outer.
3. Drill the 2 weld locations indicated by (E) and remove the B-pillar reinforcement.

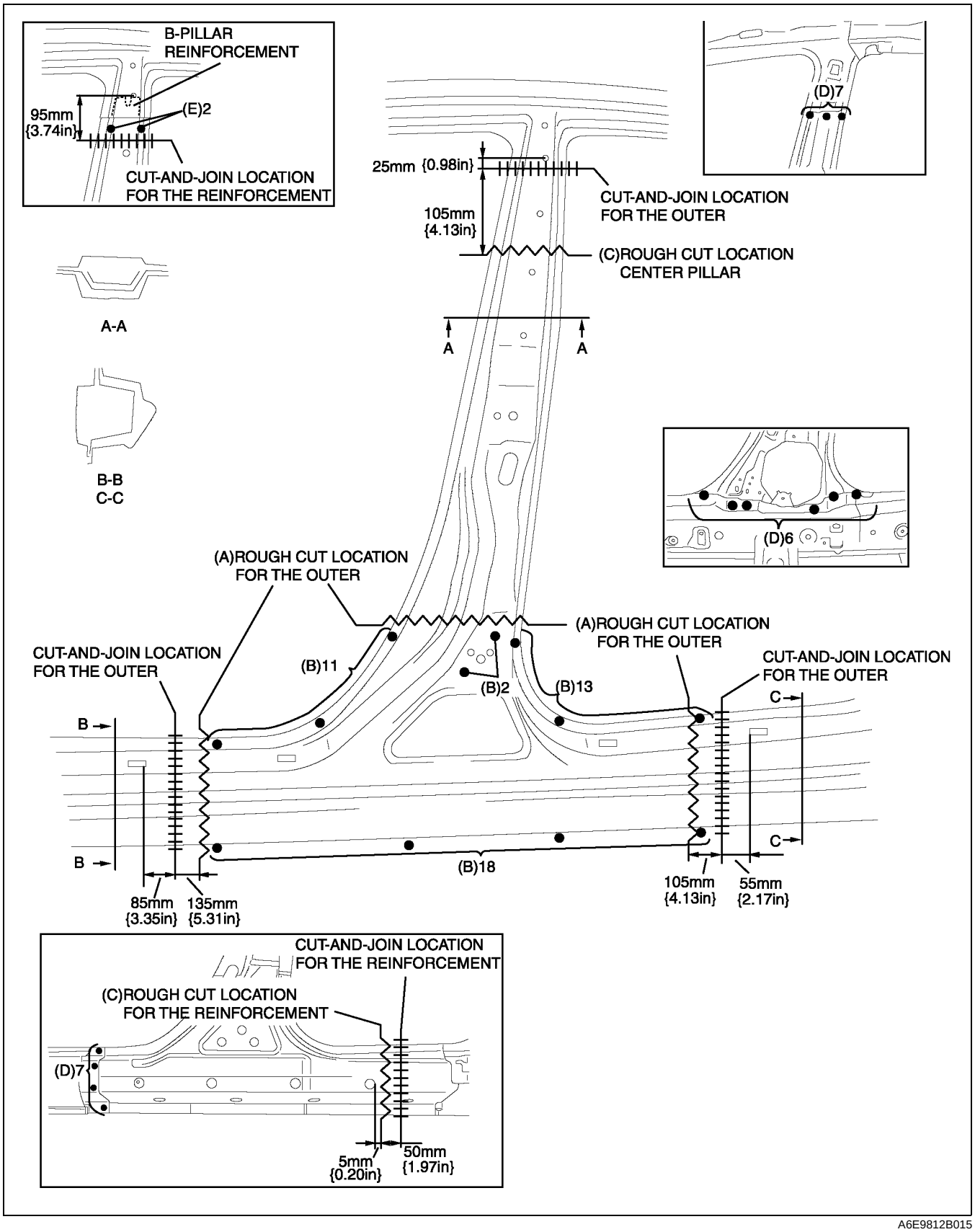

A6E9812B015

CENTER PILLAR INSTALLATION

A6E981270350B02

1. When joining the new and old parts, temporarily install and fit the new part in position, measure each dimension according to the body dimension, then adjust the position to align it to the standard dimensions.
2. Drill holes for plug welds before installing new parts.

Note

- In areas where the outer, reinforcement, inner, etc. are in 3-4 layers, drill holes for plug welds in all but the innermost panel.

Warning

- **When cutting and joining the reinforcement, make sure not to damage or scratch the B-pillar reinforcement.**

3. Install in the following order: inner, reinforcement, and outer.
4. After trial-fitting new parts, make sure the related parts fit properly.

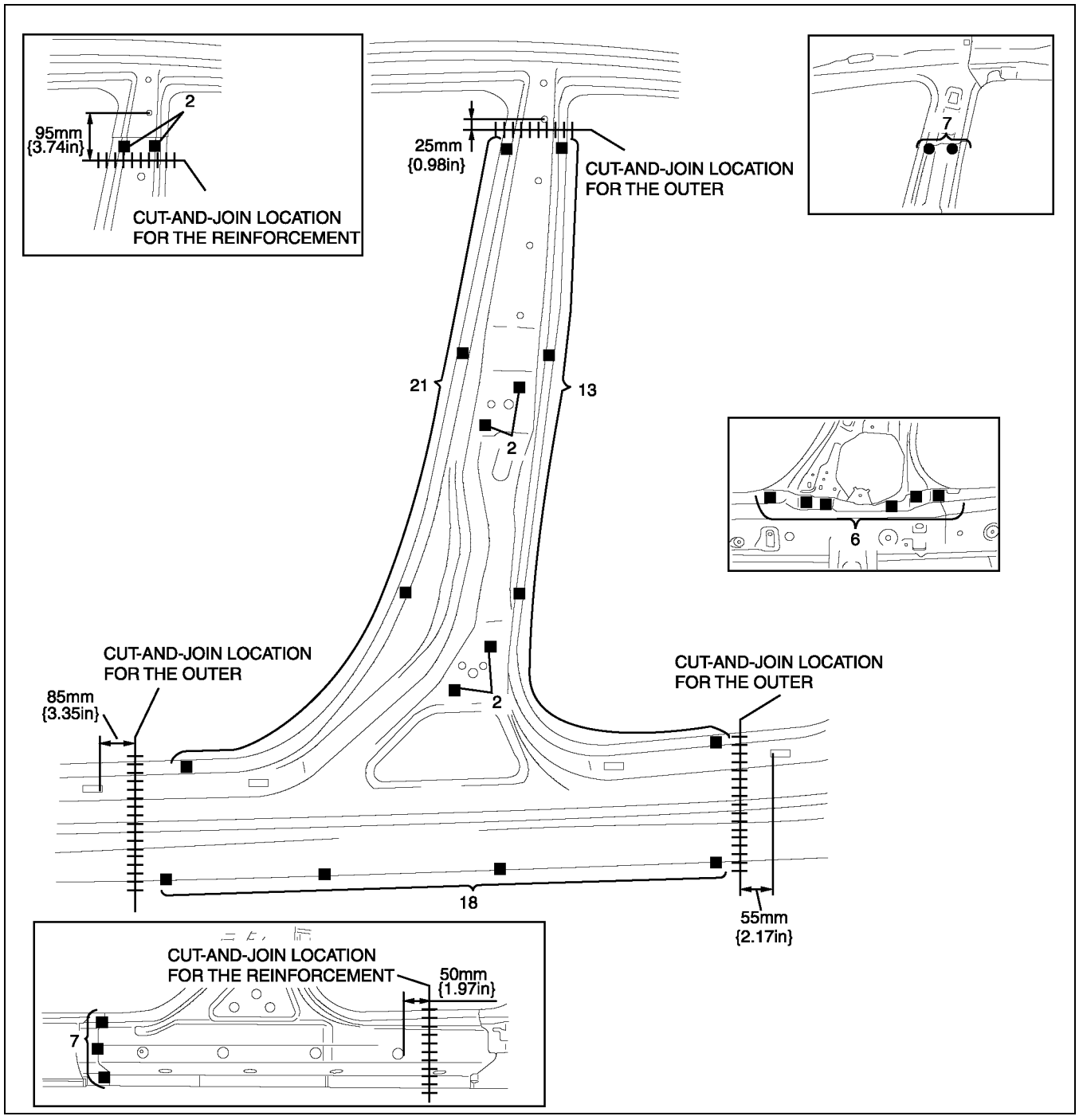

A6E9812B016

REAR FENDER PANEL REMOVAL

A6E981274100B01

SEDAN

Caution

- **Avoid cutting with a blowtorch or similar tools as the insulator (shaded area) is flammable.**

1. The rear fender panel and the rear pillar inner are joined with glue at the wheel arch line. Use a chisel or other to separate the rear fender panel from the rear pillar inner, then remove the rear fender panel.

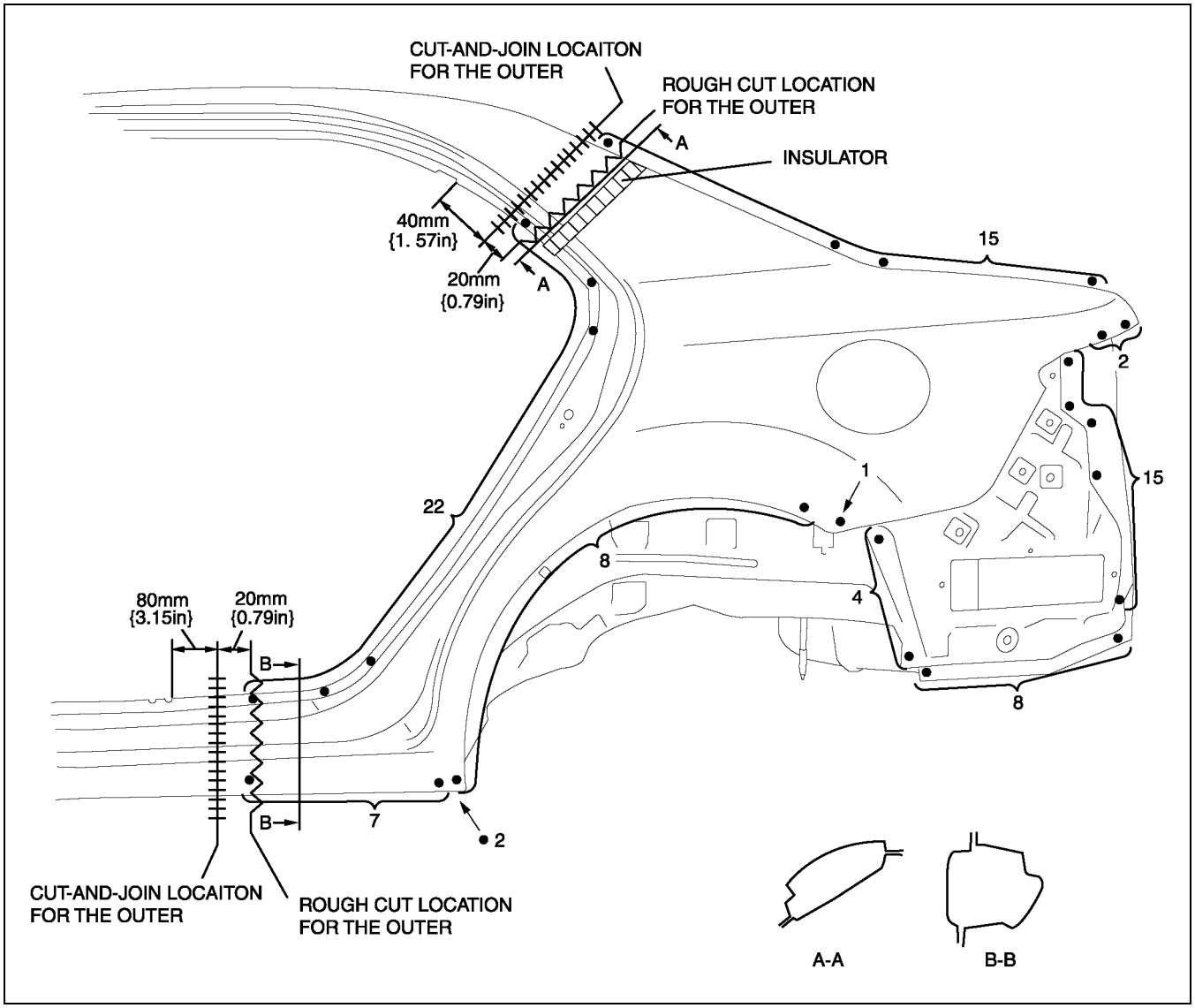

A6E9812B017

5HB

Caution
- **Avoid cutting with a blowtorch or similar tools as the insulator (shaded area) is flammable.**

1. The rear fender panel and the rear pillar inner are joined with glue at the wheel arch line. Use a chisel or other to separate the rear fender panel from the rear pillar inner, then remove the rear fender panel.

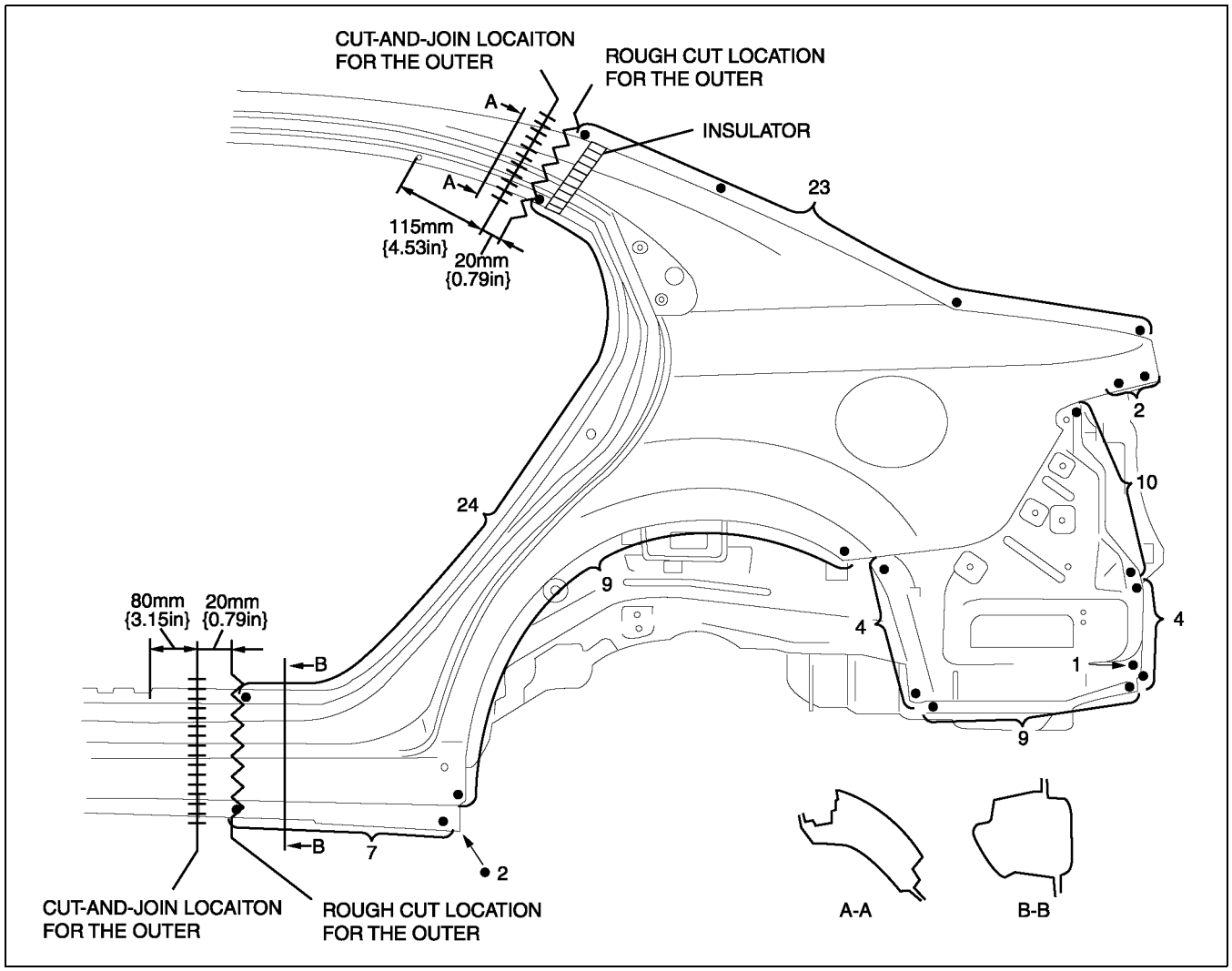

A6E9812B018

REAR FENDER PANEL INSTALLATION

A6E981274100B02

SEDAN

1. When joining the new and old parts, temporarily install and fit the new part in position, measure each dimension according to the body dimension, then adjust the position to align it to the standard dimensions.
2. Drill holes for plug welds before installing new parts.
3. Before installing new parts, apply spot weld sealer to the wheel arch line.
4. After trial-fitting new parts, make sure the related parts fit properly.

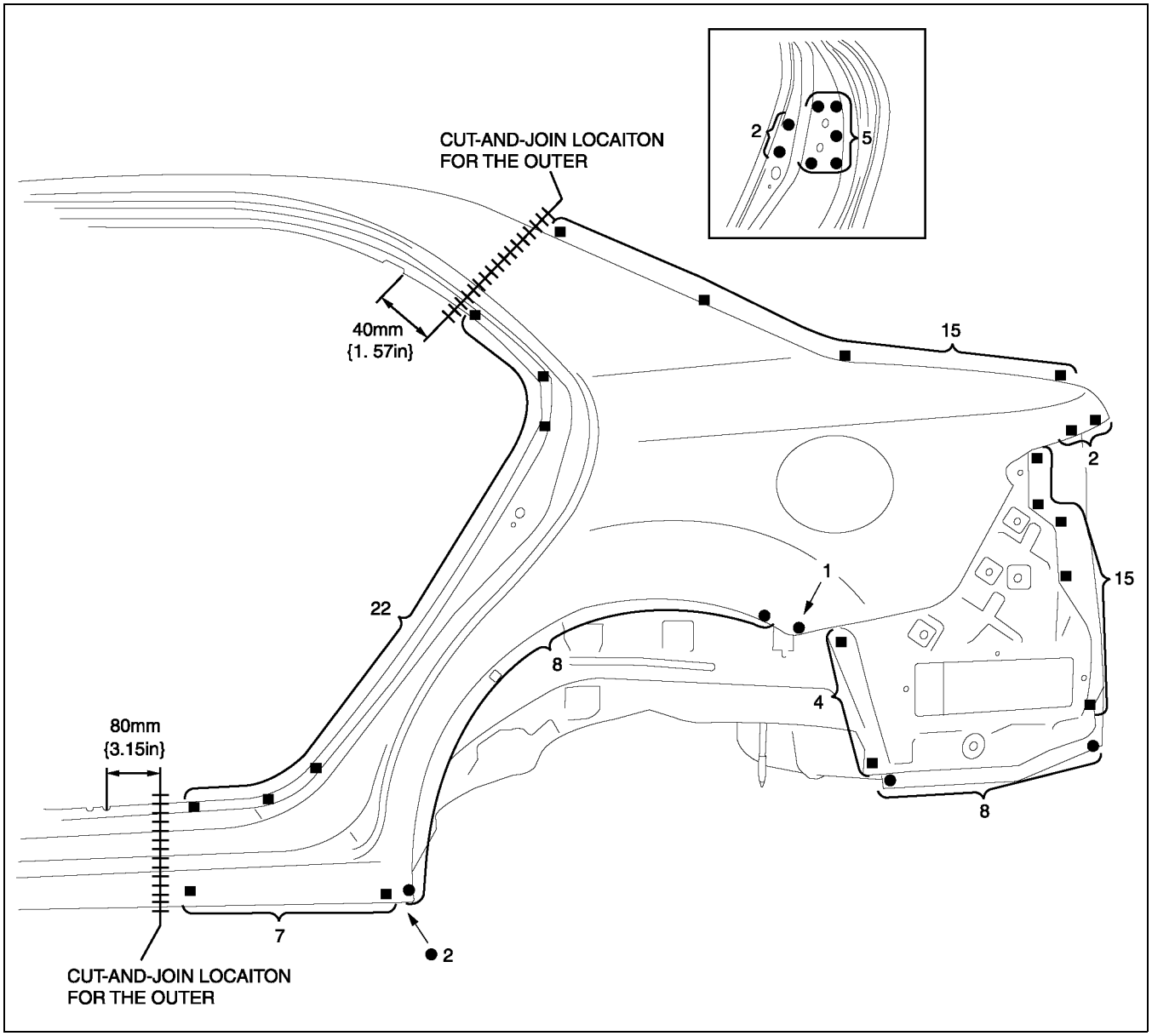

A6E9812B019

5HB

1. When joining the new and old parts, temporarily install and fit the new part in position, measure each dimension according to the body dimension, then adjust the position to align it to the standard dimensions.
2. Drill holes for plug welds before installing new parts.
3. Before installing new parts, apply spot weld sealer to the wheel arch line.
4. After trial-fitting new parts, make sure the related parts fit properly.

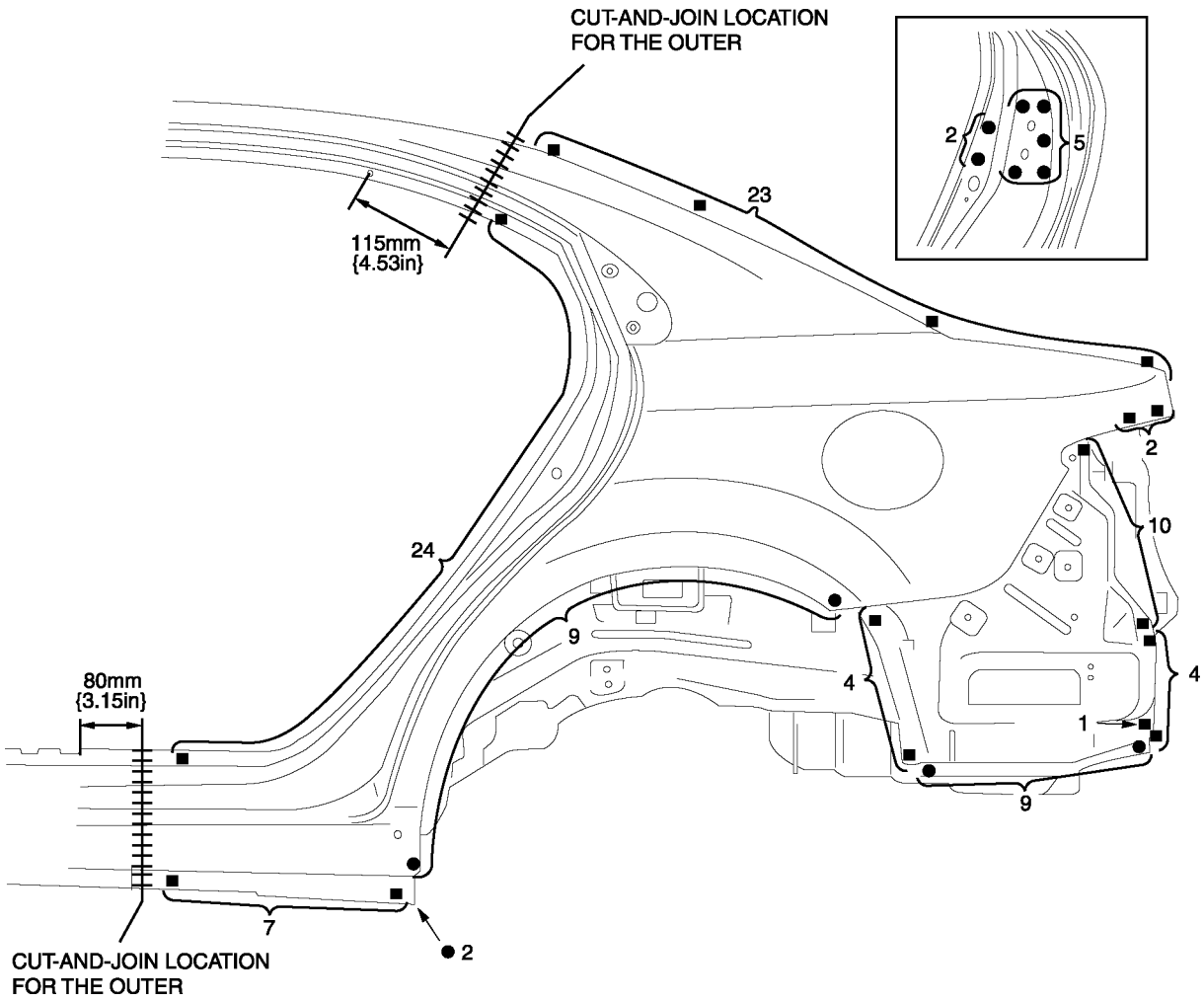

A6E9812B020

SIDE SILL PANEL REMOVAL

A6E981270270B01

1. Remove the side sill panel.
2. Drill the 3 weld locations indicated by (A), from the room side.
3. Remove the side sill reinforcement.

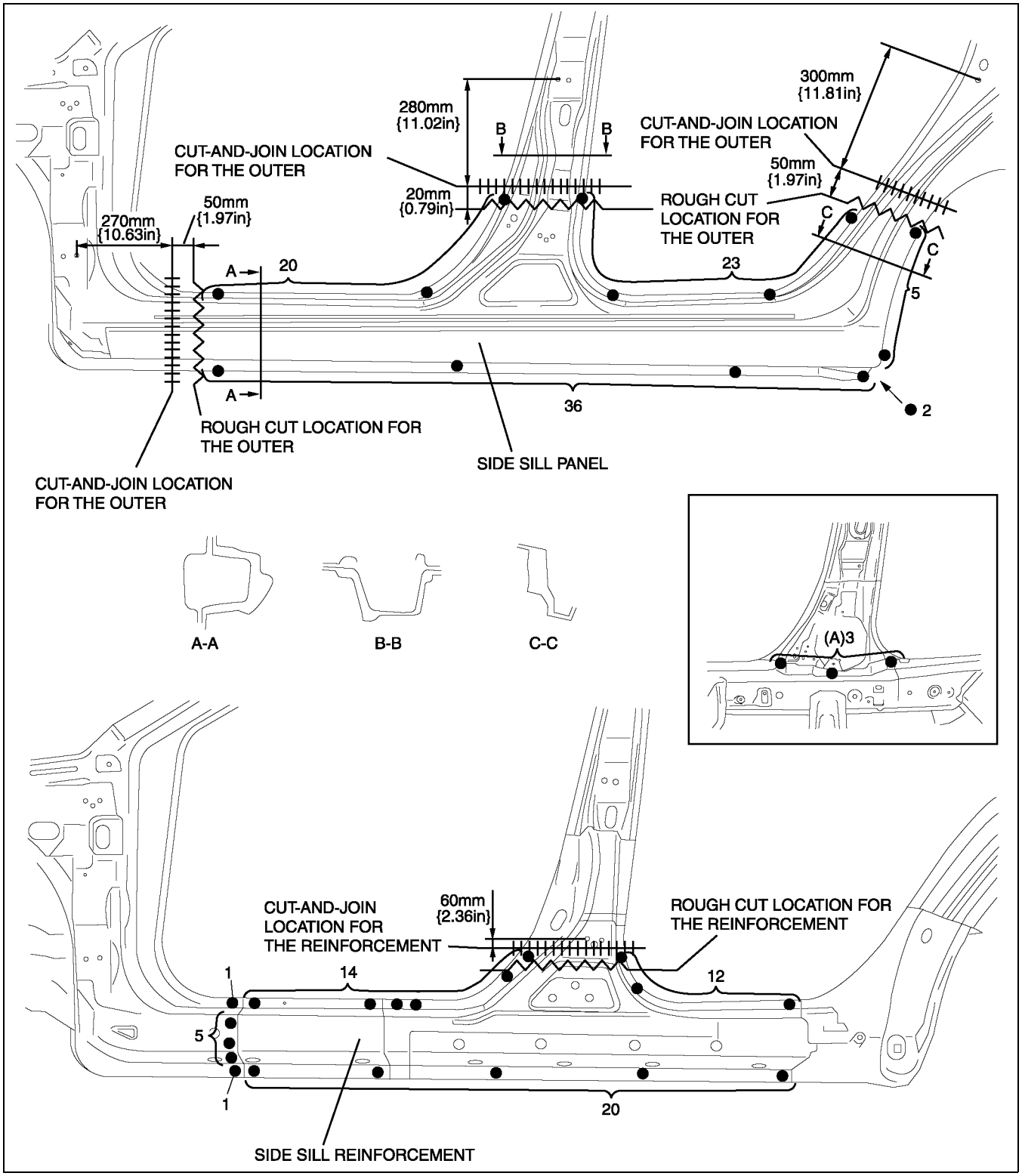

A6E9812B021

SIDE SILL PANEL INSTALLATION

A6E981270270B02

1. When joining the new and old parts, temporarily install and fit the new part in position, measure each dimension according to the body dimension, then adjust the position to align it to the standard dimensions.
2. Drill holes for plug welds before installing new parts.
3. Plug welding of 59 weld locations indicated by (A), during installation of the side sill panel.
4. After trial-fitting new parts, make sure the related parts fit properly.

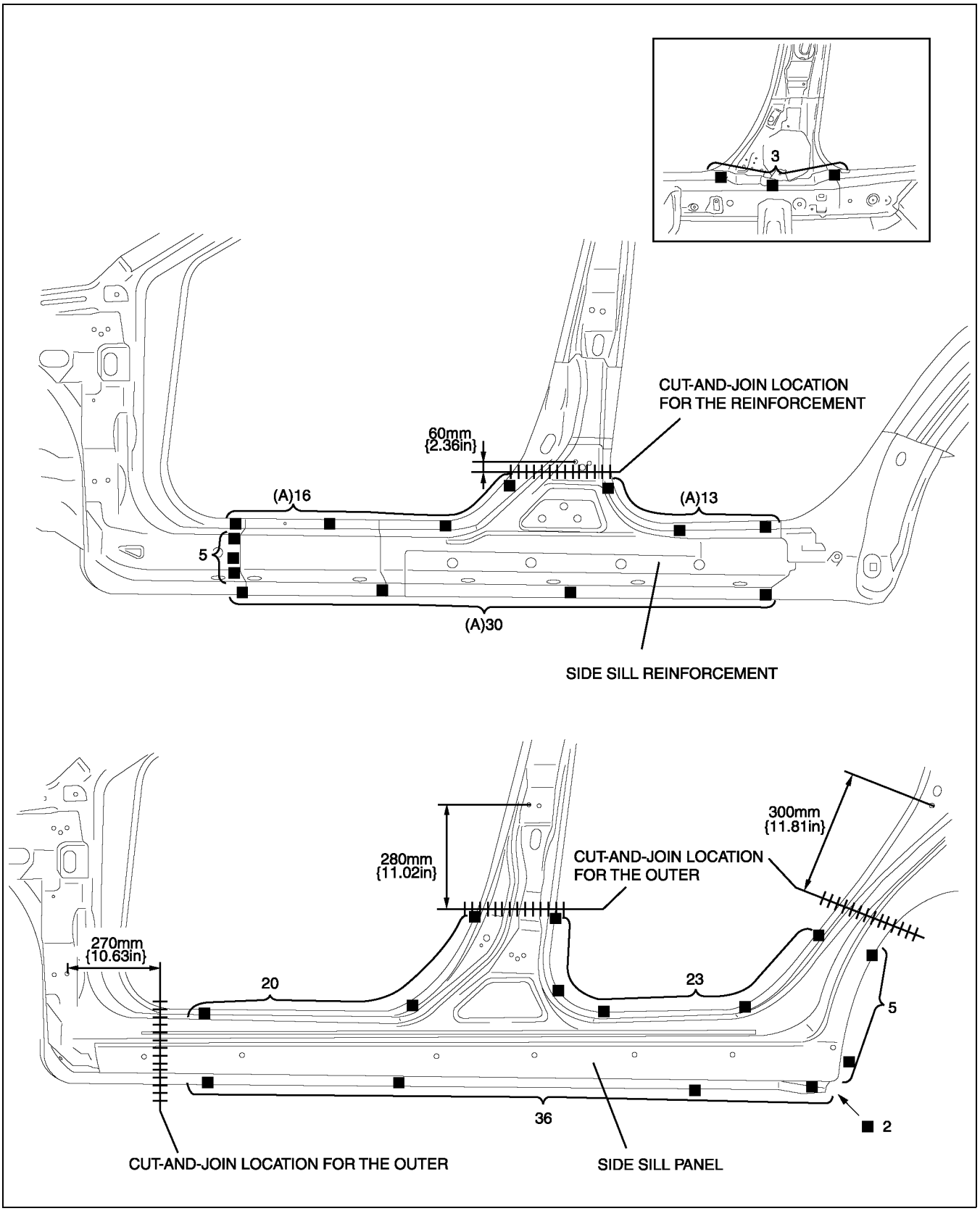

A6E9812B022

REAR END PANEL REMOVAL

A6E981270750B01

SEDAN

1. Remove the rear end panel.

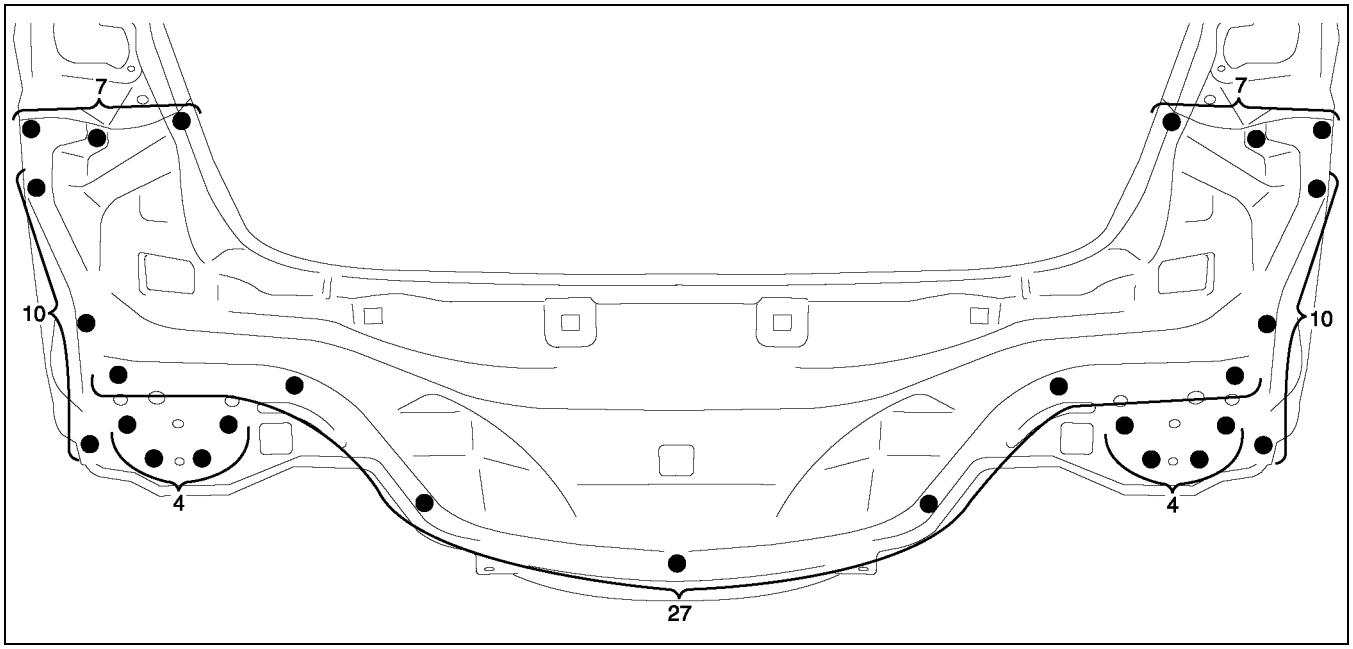

A6E9812B023

5HB

1. Drill the 2 weld locations indicated by (A), from the room side.
2. Remove the rear end panel.

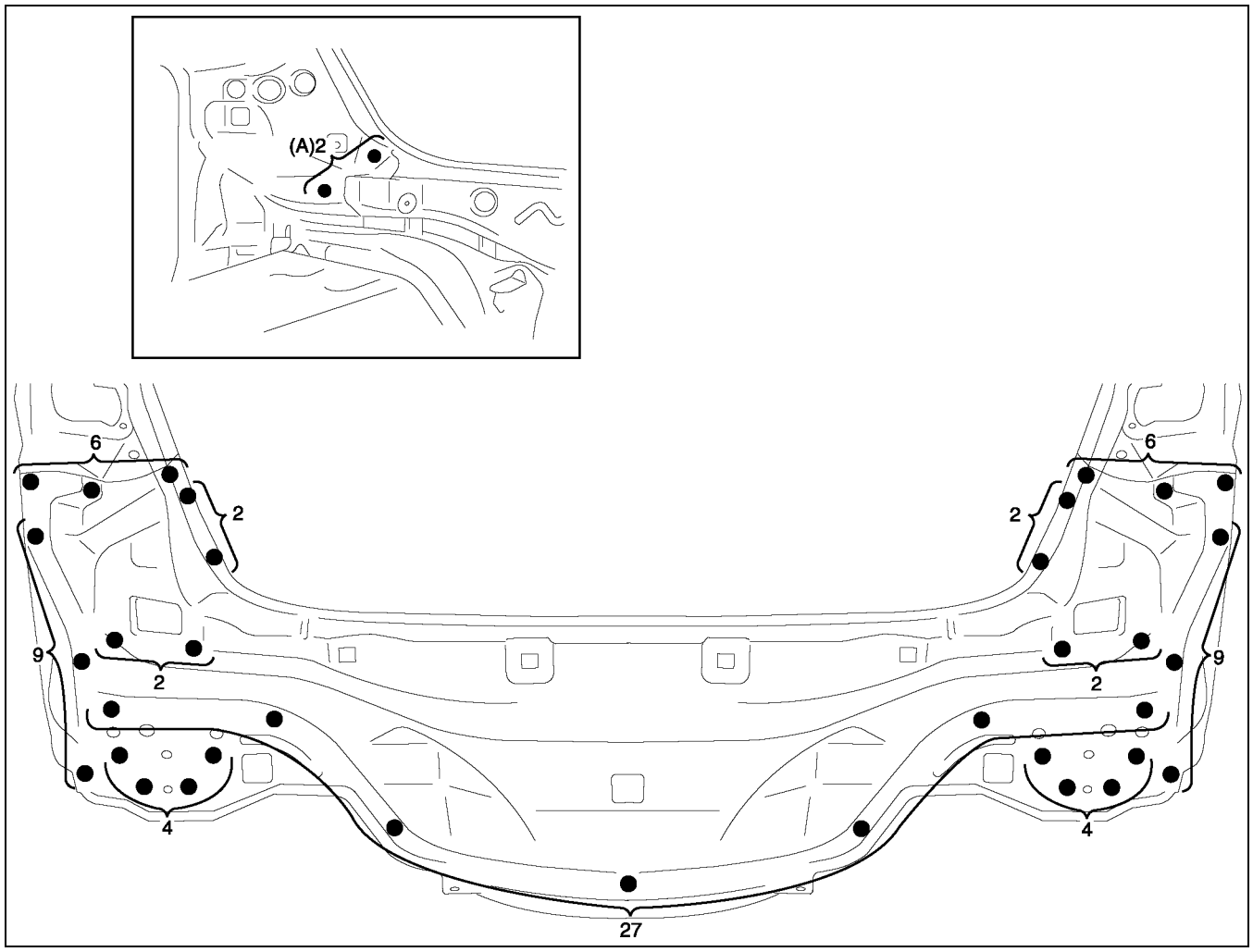

A6E9812B025

REAR END PANEL INSTALLATION

A6E981270750B02

SEDAN

1. When installing new parts, position each part so that the section measurement aligns to the body dimension.
2. Drill holes for plug welds before installing new parts.
3. After trial-fitting new parts, make sure the related parts fit properly.

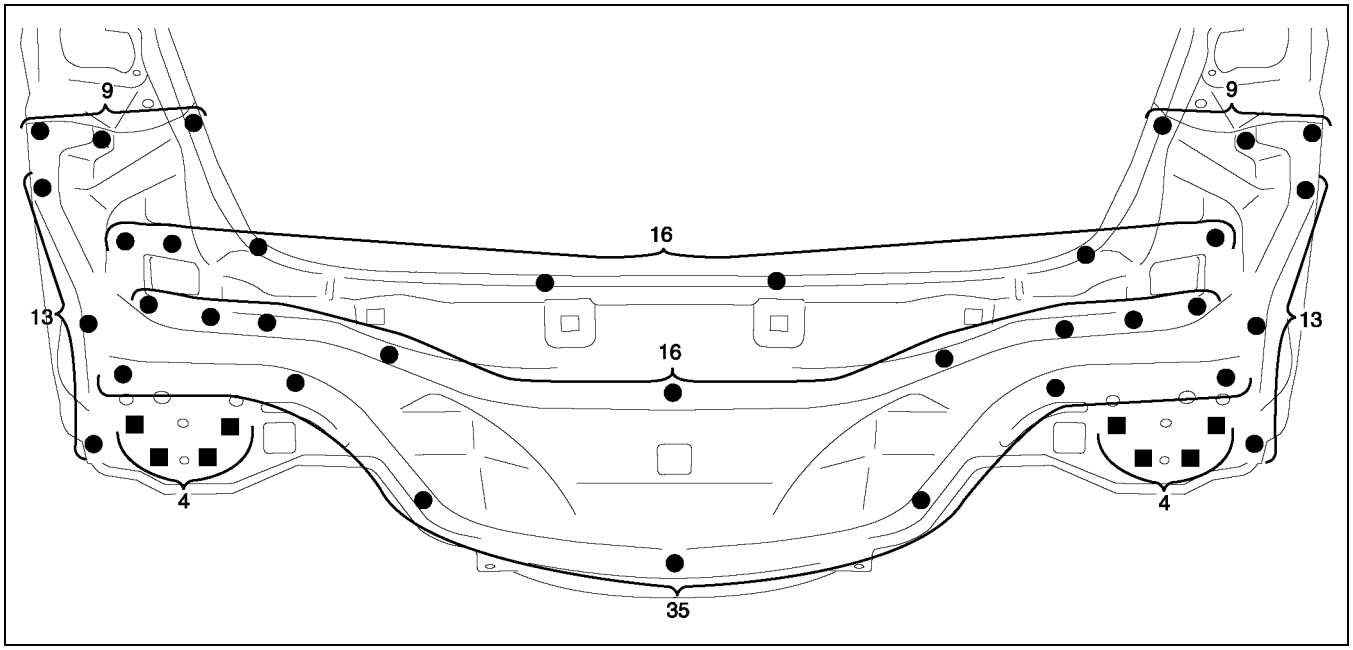

A6E9812B024

5HB

1. When installing new parts, position each part so that the section measurement aligns to the body dimension.
2. Drill holes for plug welds before installing new parts.
3. After trial-fitting new parts, make sure the related parts fit properly.

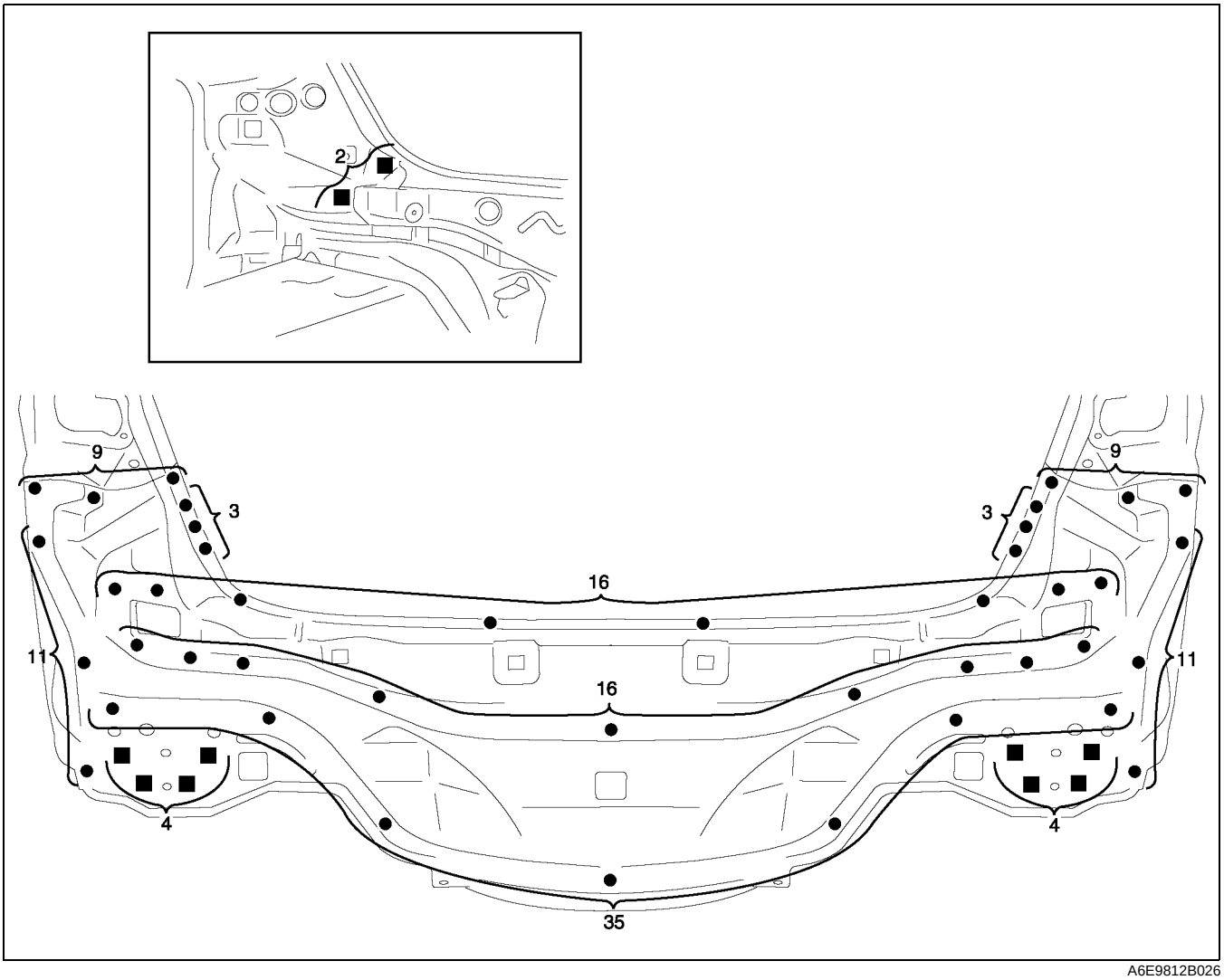

A6E9812B026

REAR FENDER RAIN RAIL AND CORNER PLATE REMOVAL

A6E981270440B01

SEDAN

1. Remove the rear fender rein rail and corner plate.

Note

- When removing the rear fender rain rail and the corner plate separately, drill 3 locations indicated by (A).

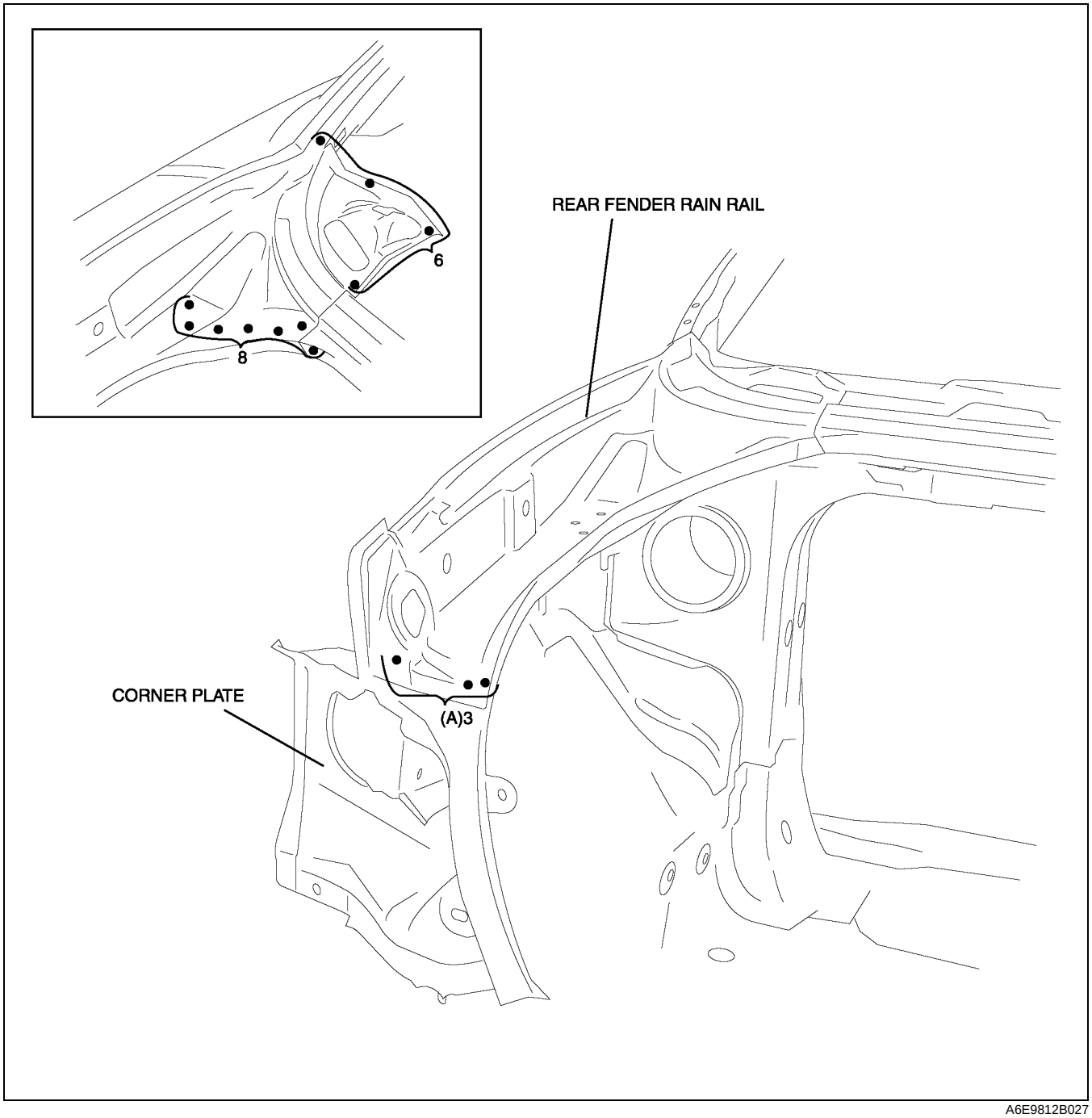

A6E9812B027

5HB

1. Remove the rear fender rain rail and corner plate.

Note

- When removing the rear fender rain rail and the corner plate separately, drill 2 locations indicated by (A).

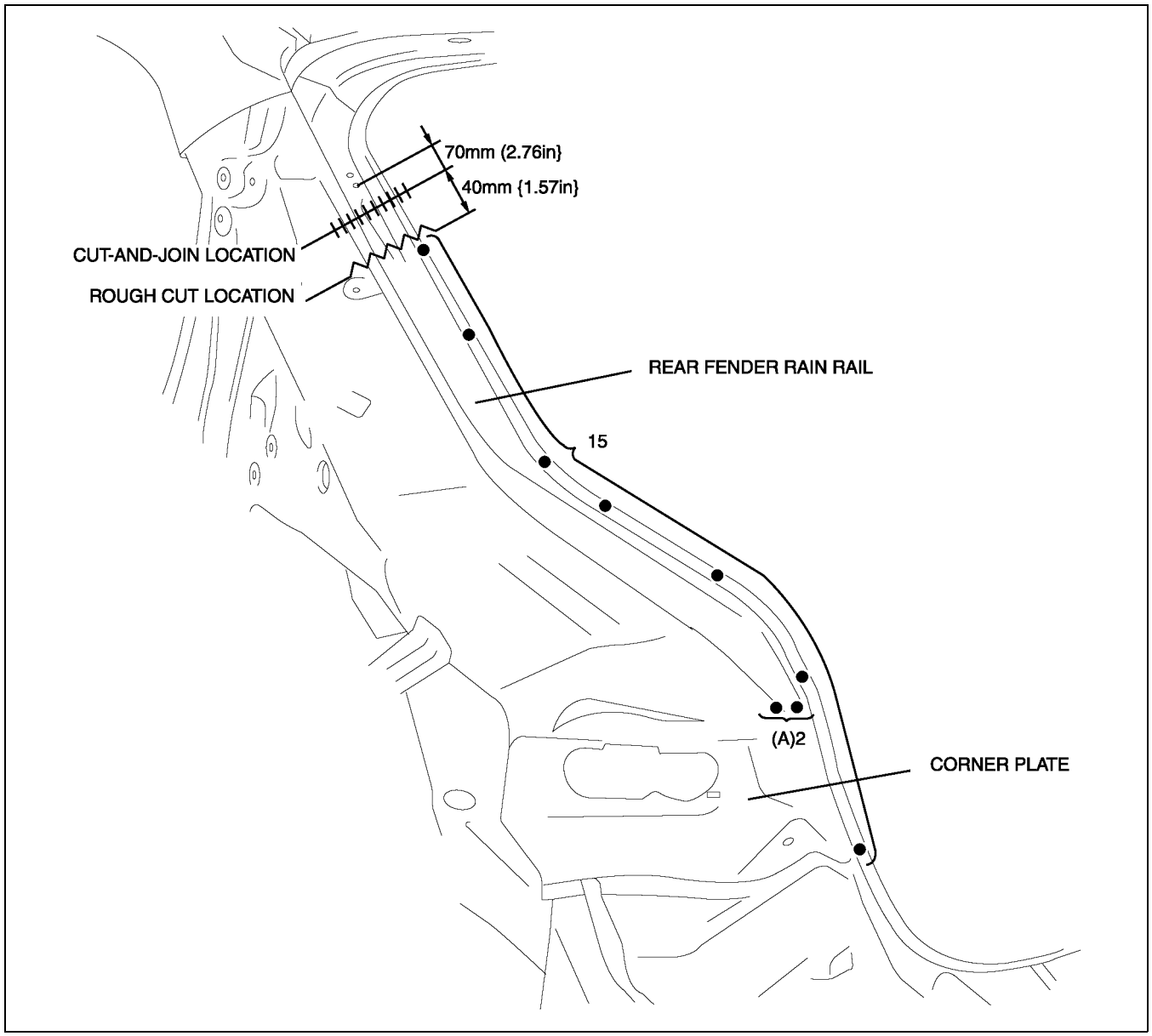

A6E9812B029

REAR FENDER RAIN RAIL AND CORNER PLATE INSTALLATION

A6E981270440B02

SEDAN

1. When installing new parts, position each part so that the section measurement aligns to the body dimension.
2. Drill holes for plug welds before installing new parts.
3. After trial-fitting new parts, make sure the related parts fit properly.

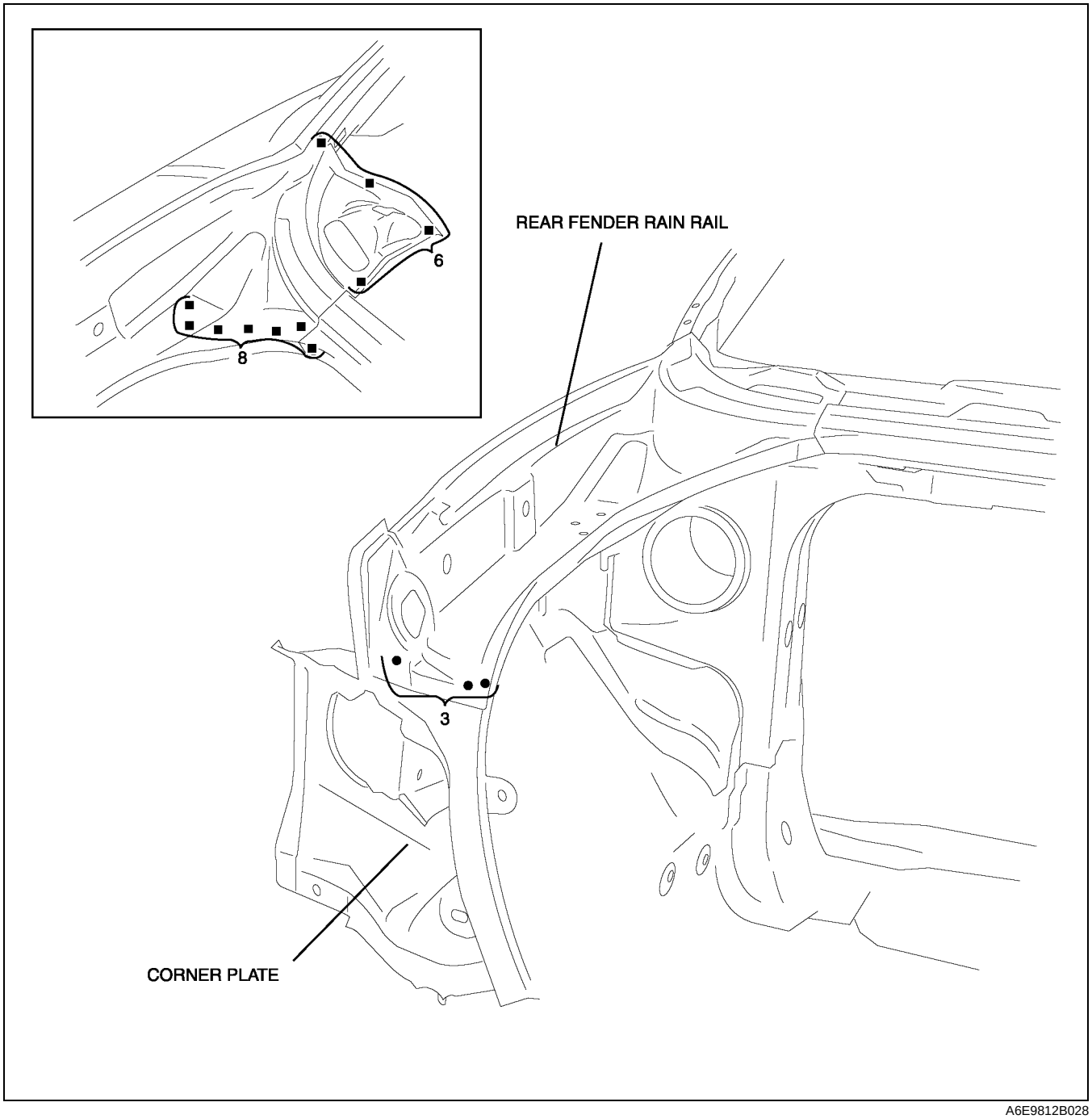

A6E9812B028

5HB

1. When joining the new and old parts, temporarily install and fit the new part in position, measure each dimension according to the body dimension, then adjust the position to align it to the standard dimensions.
2. After trial-fitting new parts, make sure the related parts fit properly.

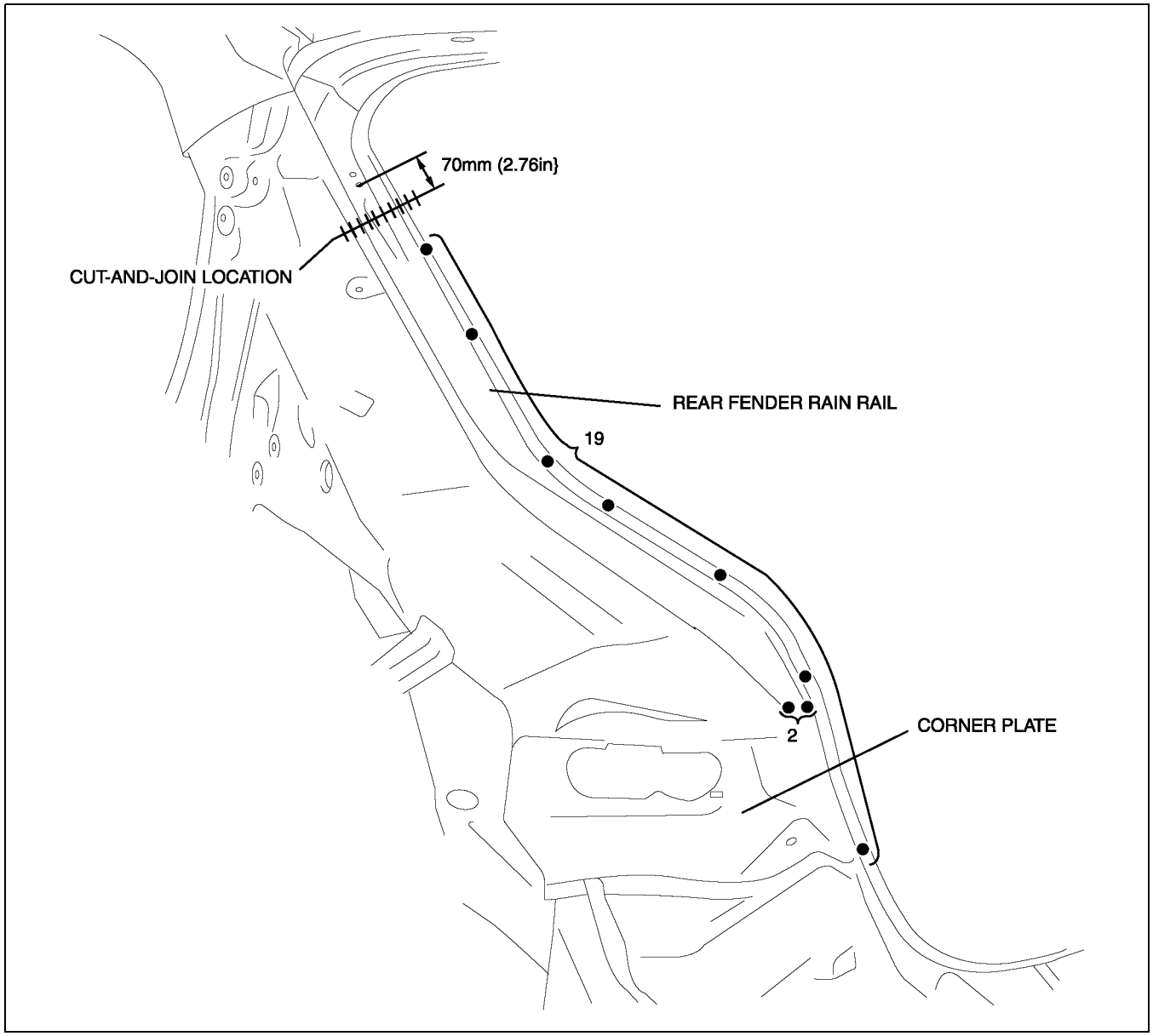

A6E9812B030

REAR FLOOR PAN REMOVAL

A6E981253750B01

1. Remove the rear floor pan.

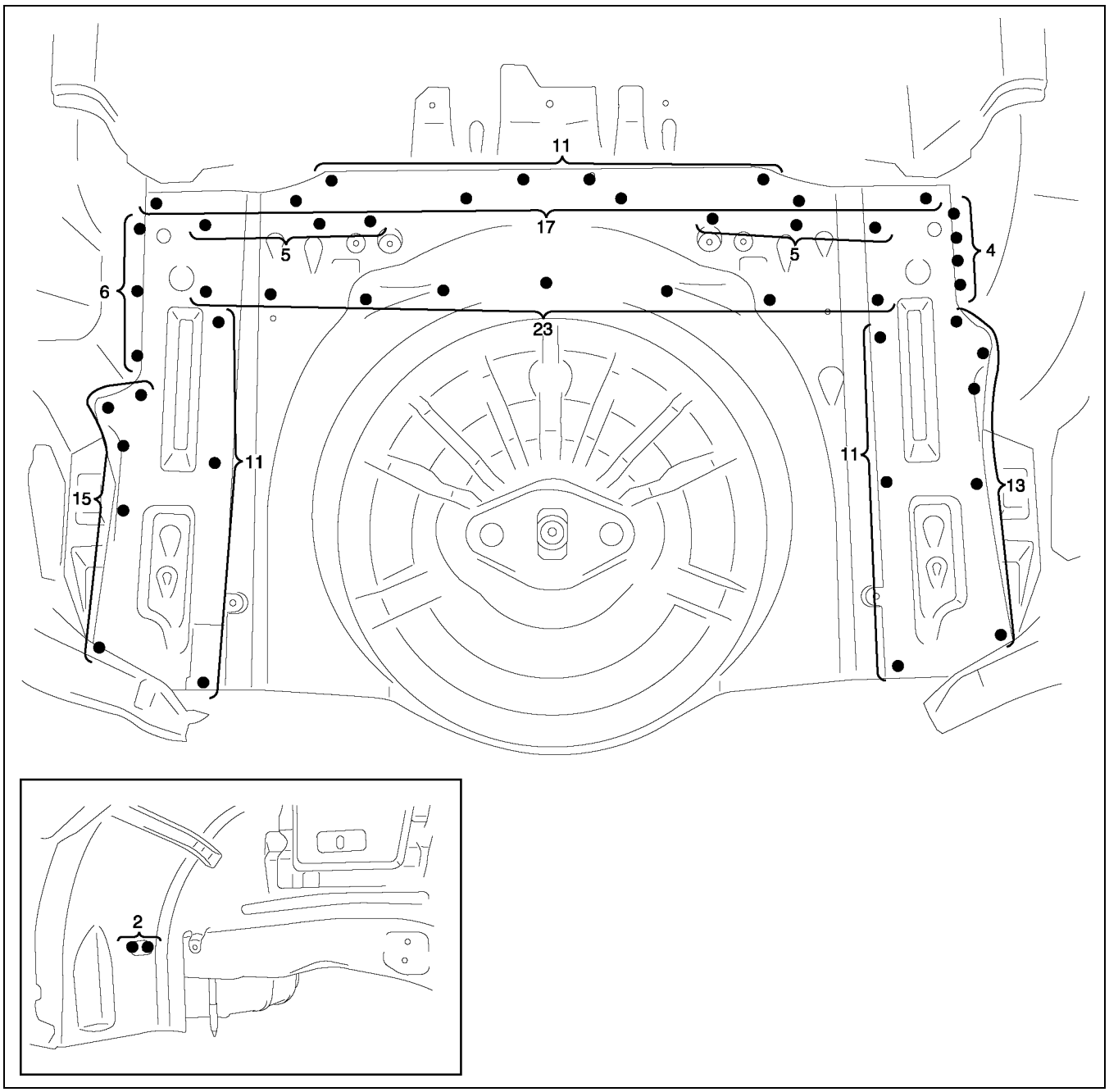

A6E9812B035

REAR FLOOR PAN INSTALLATION

A6E981253750B02

1. Drill holes for plug welds before installing new parts.
2. After trial-fitting new parts, make sure the related parts fit properly.

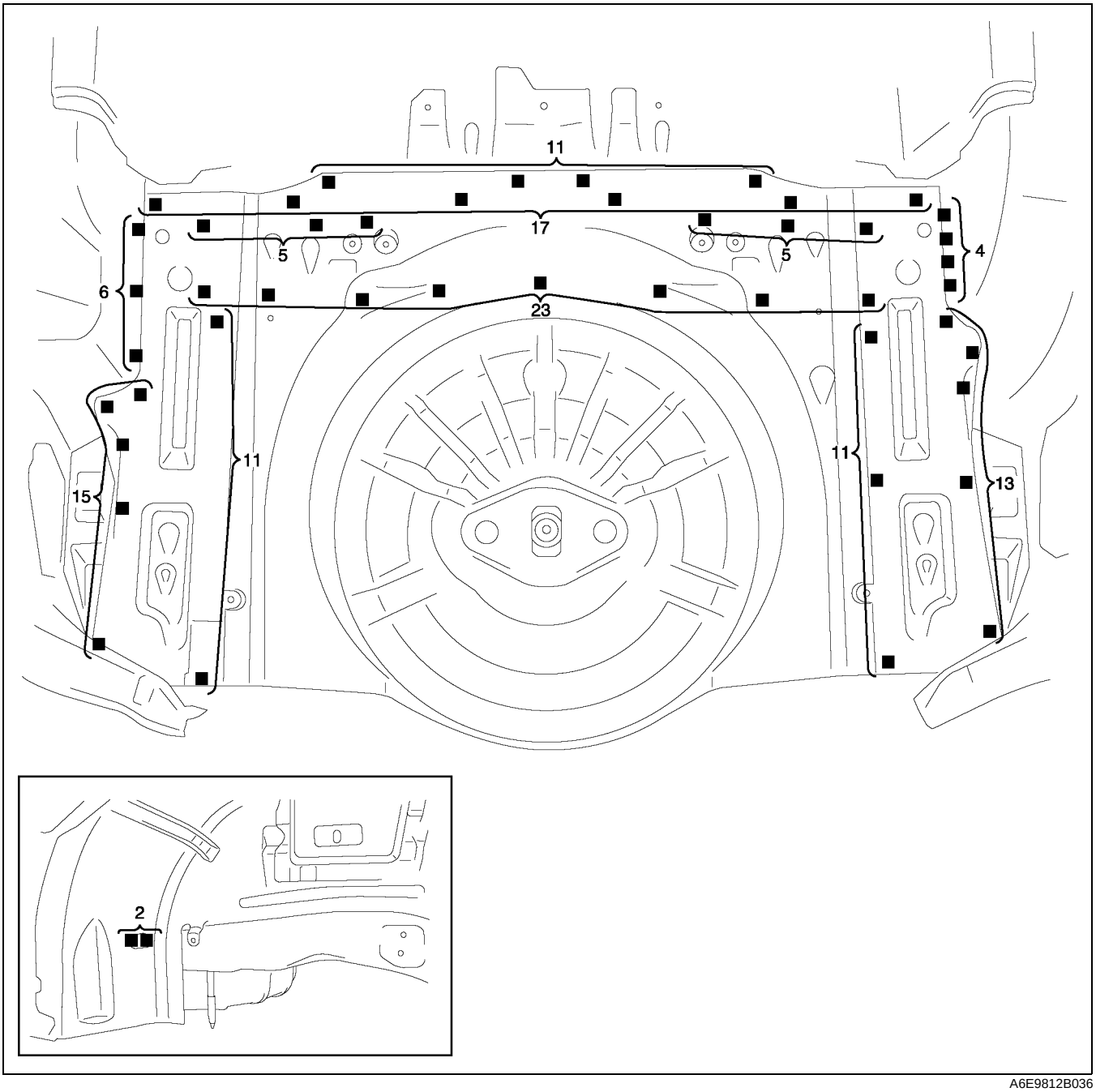

A6E9812B036

FLOOR SIDE PANEL REMOVAL

A6E981253730B01

SEDAN

1. Remove the floor side panel.

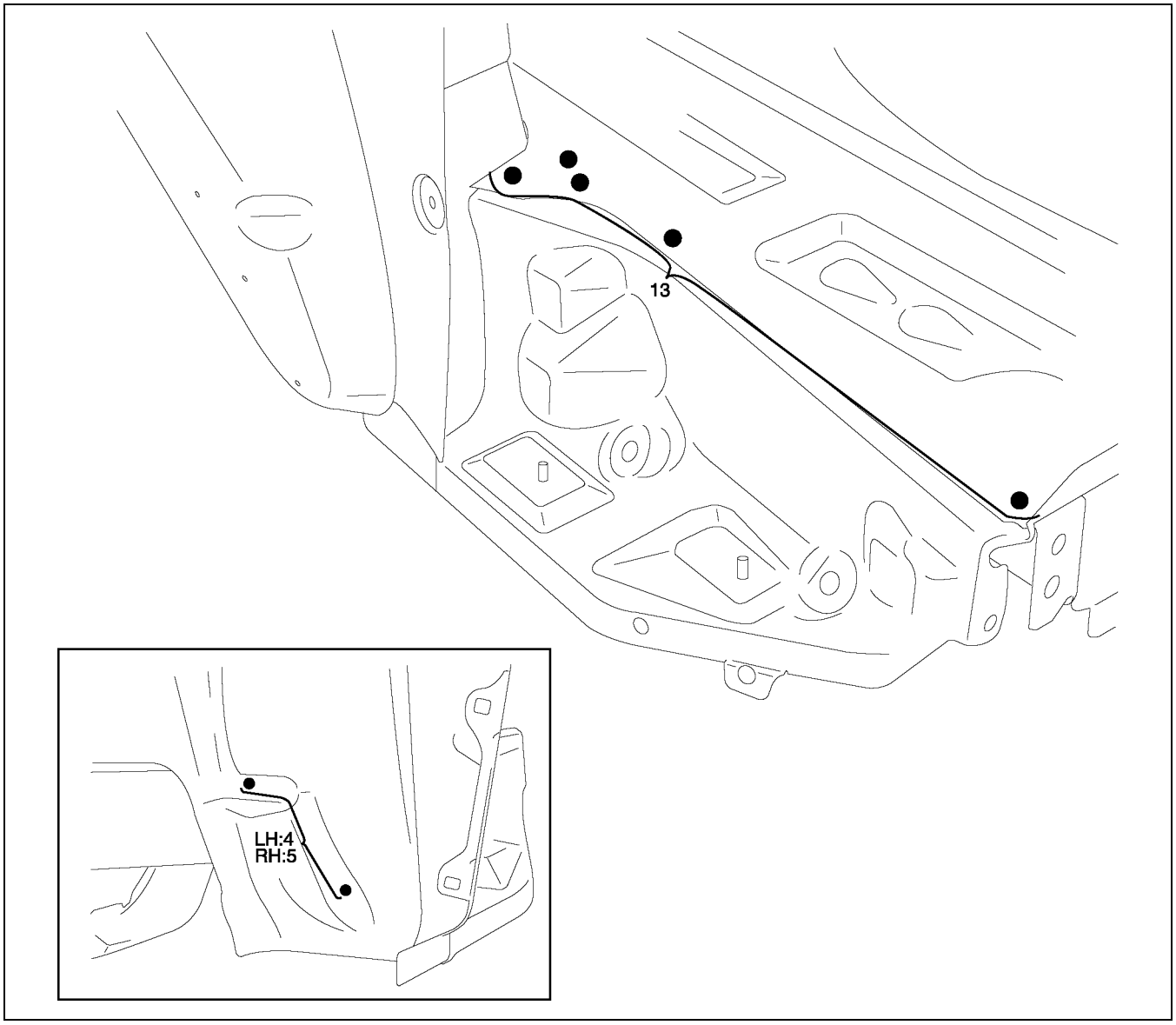

A6E9812B037

5HB

1. Remove the floor side panel.

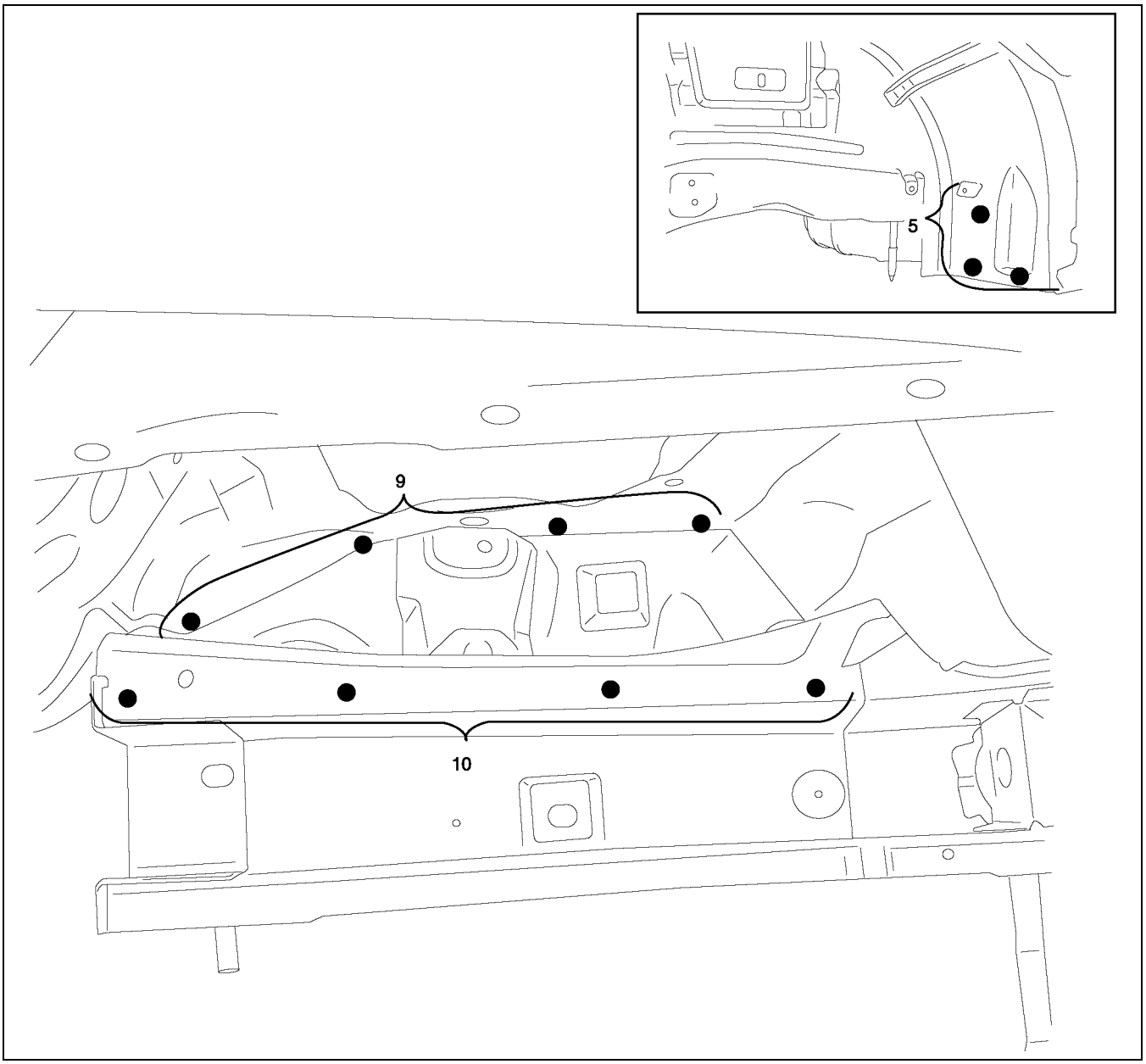

A6E9812B039

FLOOR SIDE PANEL INSTALLATION

A6E981253730B02

SEDAN

1. Drill holes for plug welds before installing new parts.
2. After trial-fitting new parts, make sure the related parts fit properly.

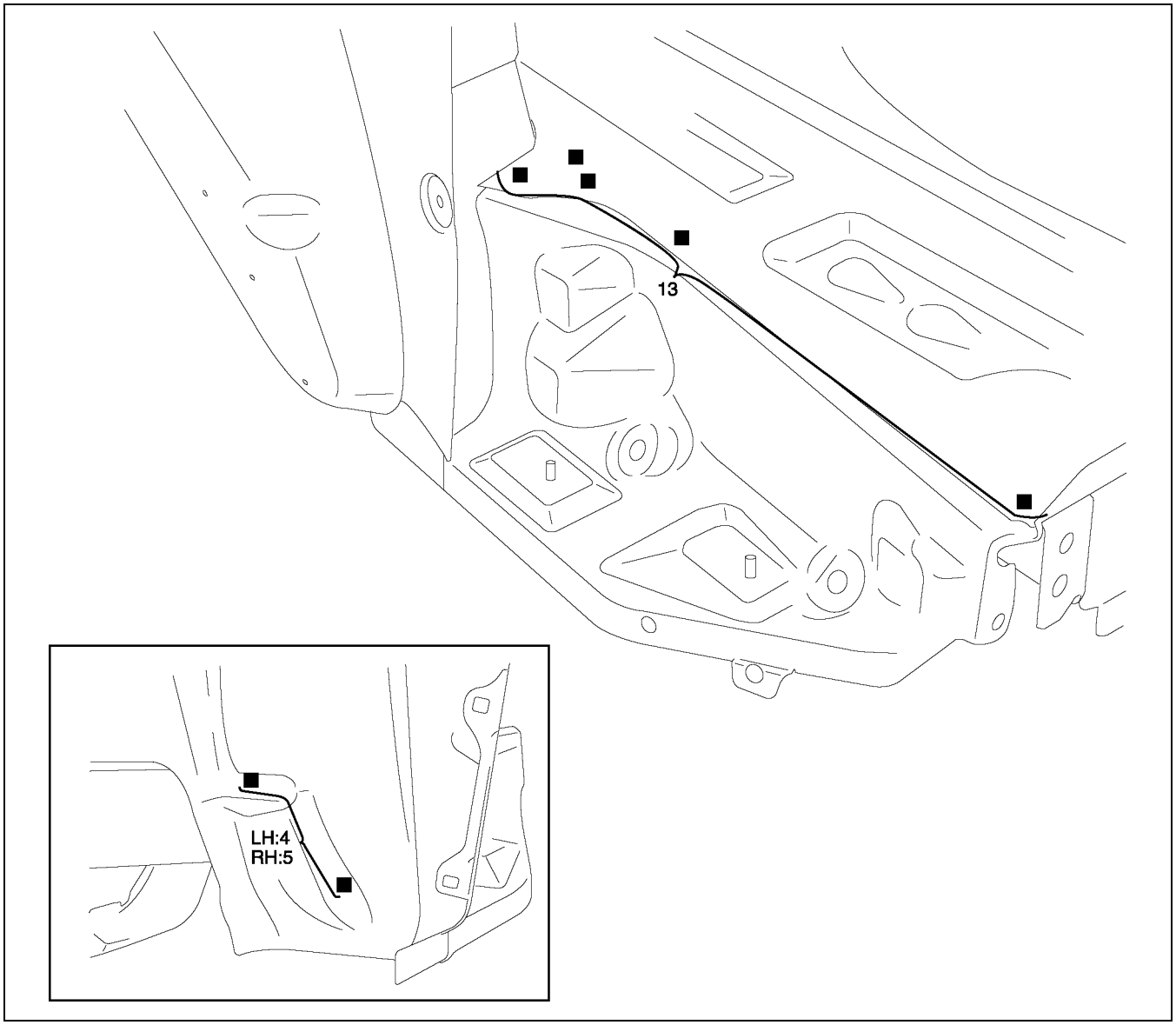

A6E9812B038

5HB

1. Drill holes for plug welds before installing new parts.
2. After trial-fitting new parts, make sure the related parts fit properly.

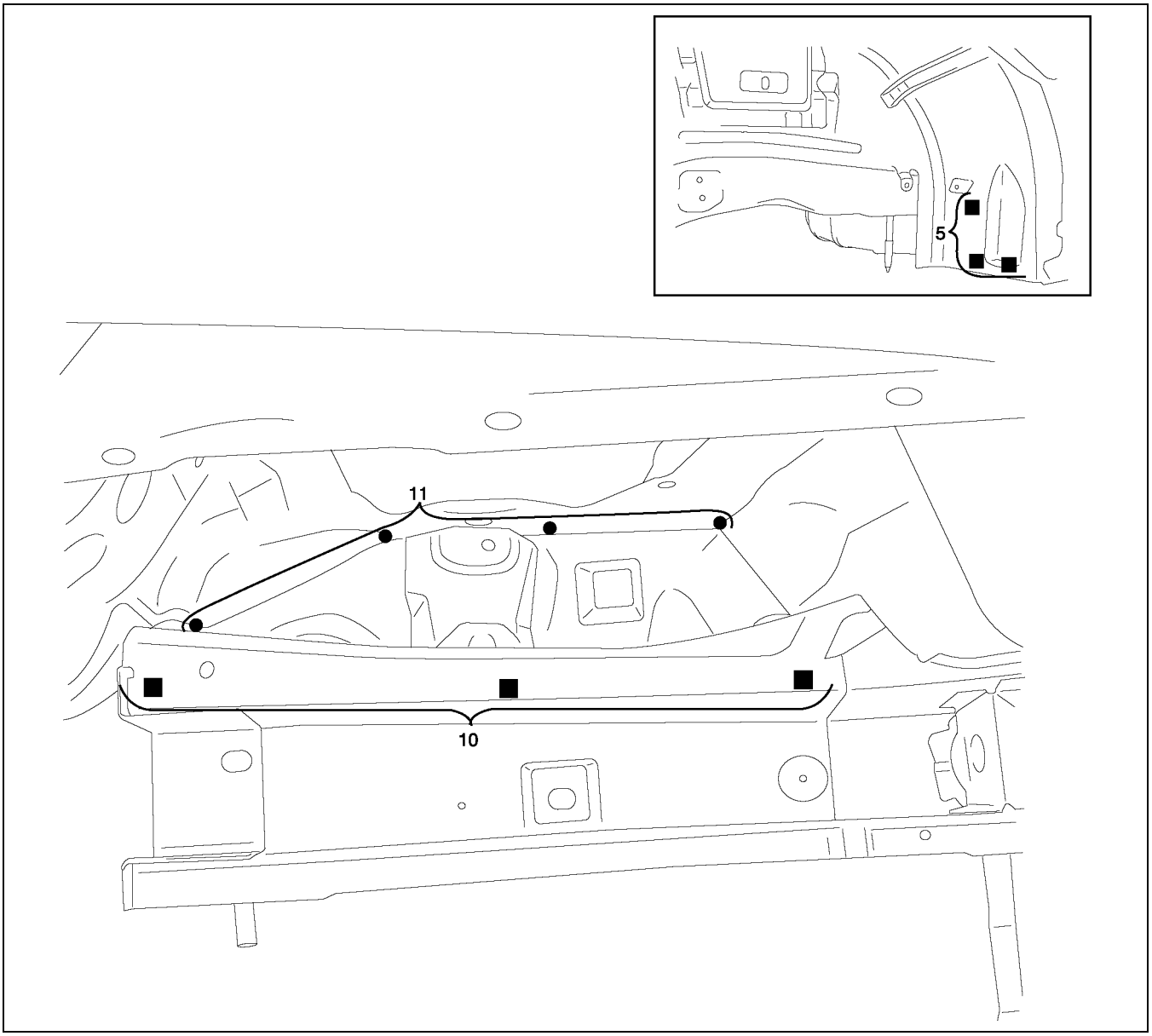

A6E9812B040

REAR SIDE FRAME (PARTIAL CUTTING) REMOVAL

A6E981253815B01

1. Rough cut and remove the damaged part of the rear side frame.

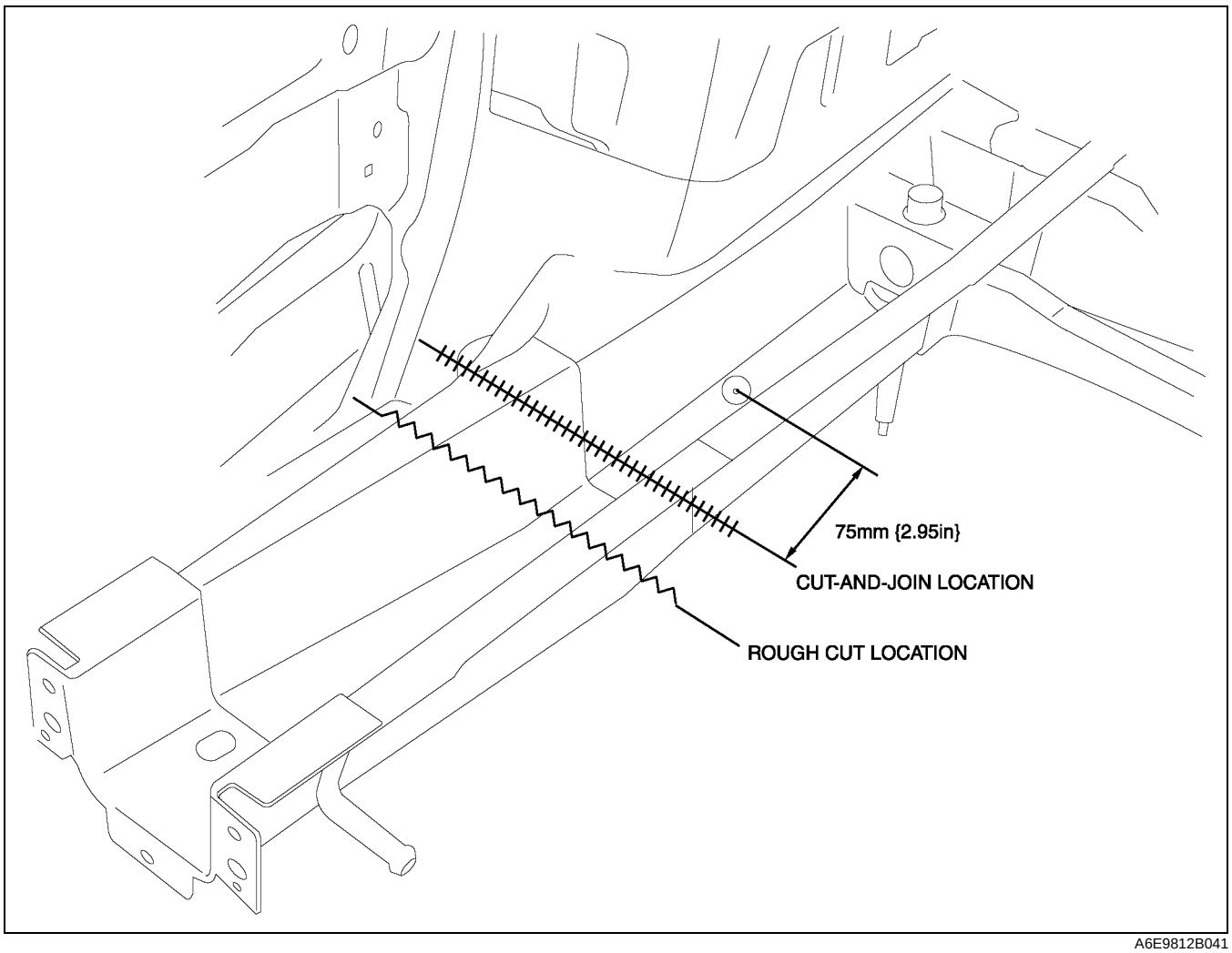

A6E9812B041

REAR SIDE FRAME (PARTIAL CUTTING) INSTALLATION

A6E981253815B02

1. Cut the new and old parts at the cut-and-join location, and bevel the parts.
2. When installing new parts, position each part so that the section measurement aligns to the standard dimensions.
3. After trial-fitting new parts, make sure the related parts fit properly.

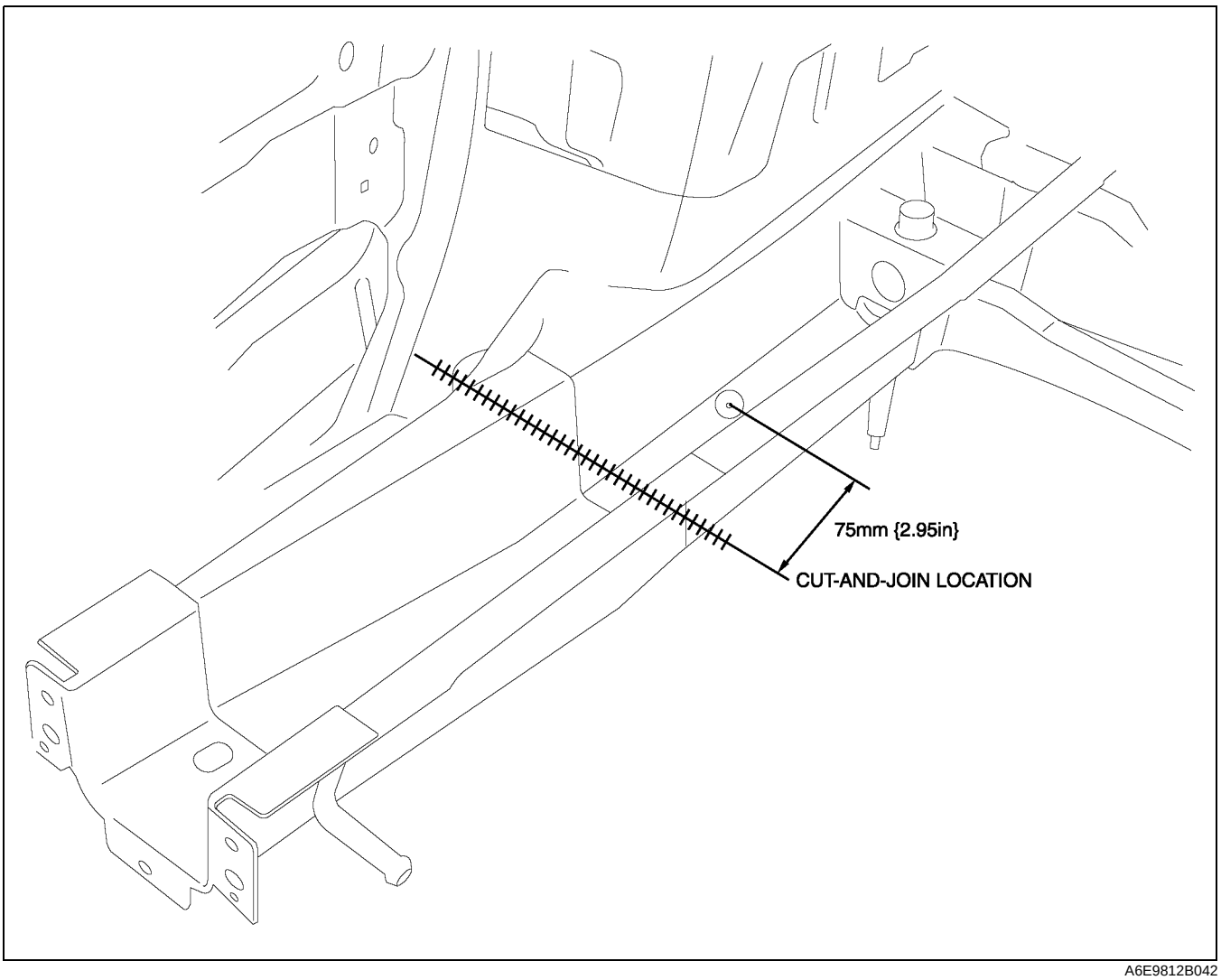

A6E9812B042

ROOF PANEL REMOVAL

A6E981270600B01

SEDAN

1. Remove the roof panel.

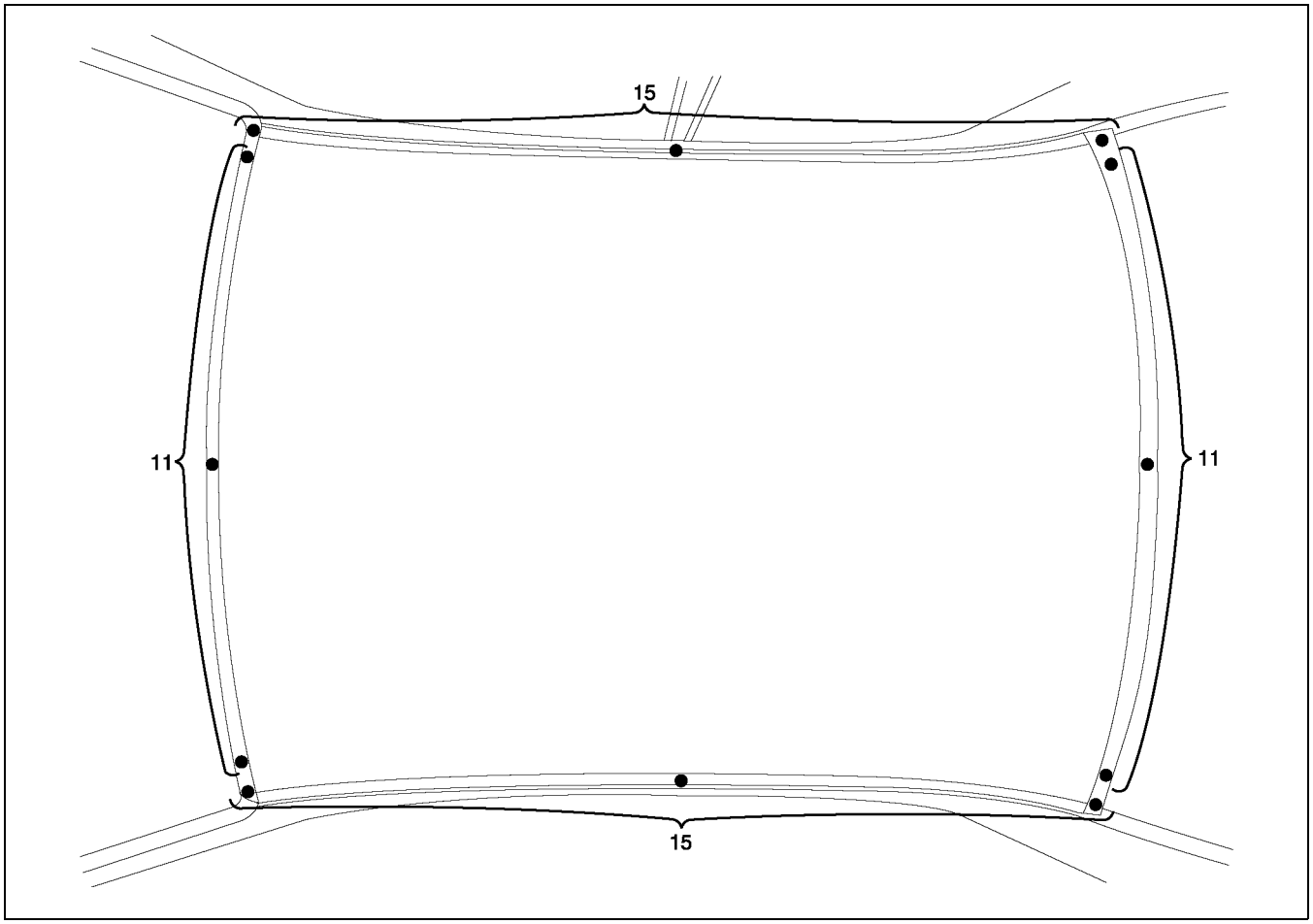

A6E9812B031

5HB

1. Remove the roof panel.

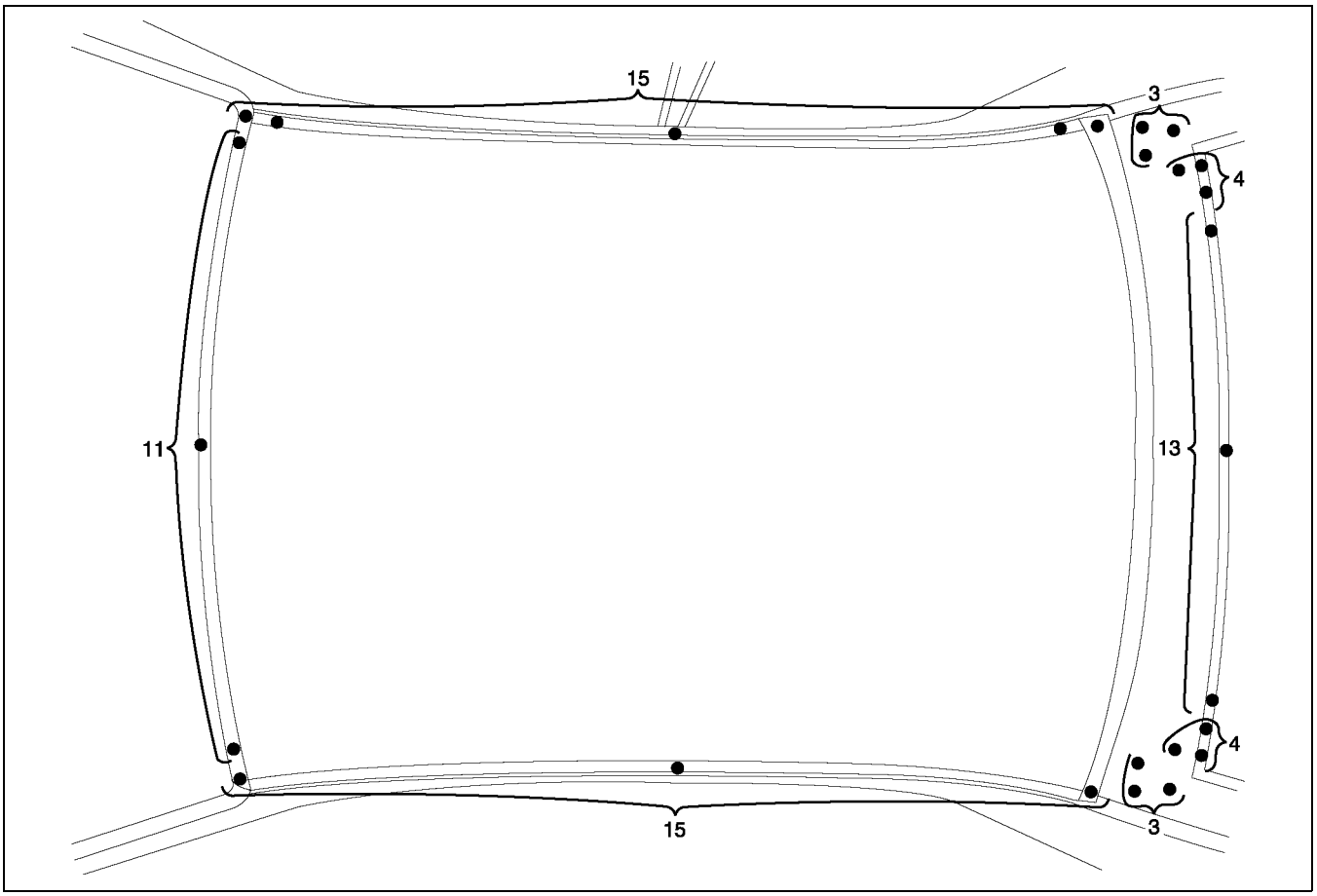

A6E9812B033

ROOF PANEL INSTALLATION

A6E981270600B02

SEDAN

1. Drill holes for plug welds before installing new parts.
2. After trial-fitting new parts, make sure the related parts fit properly.

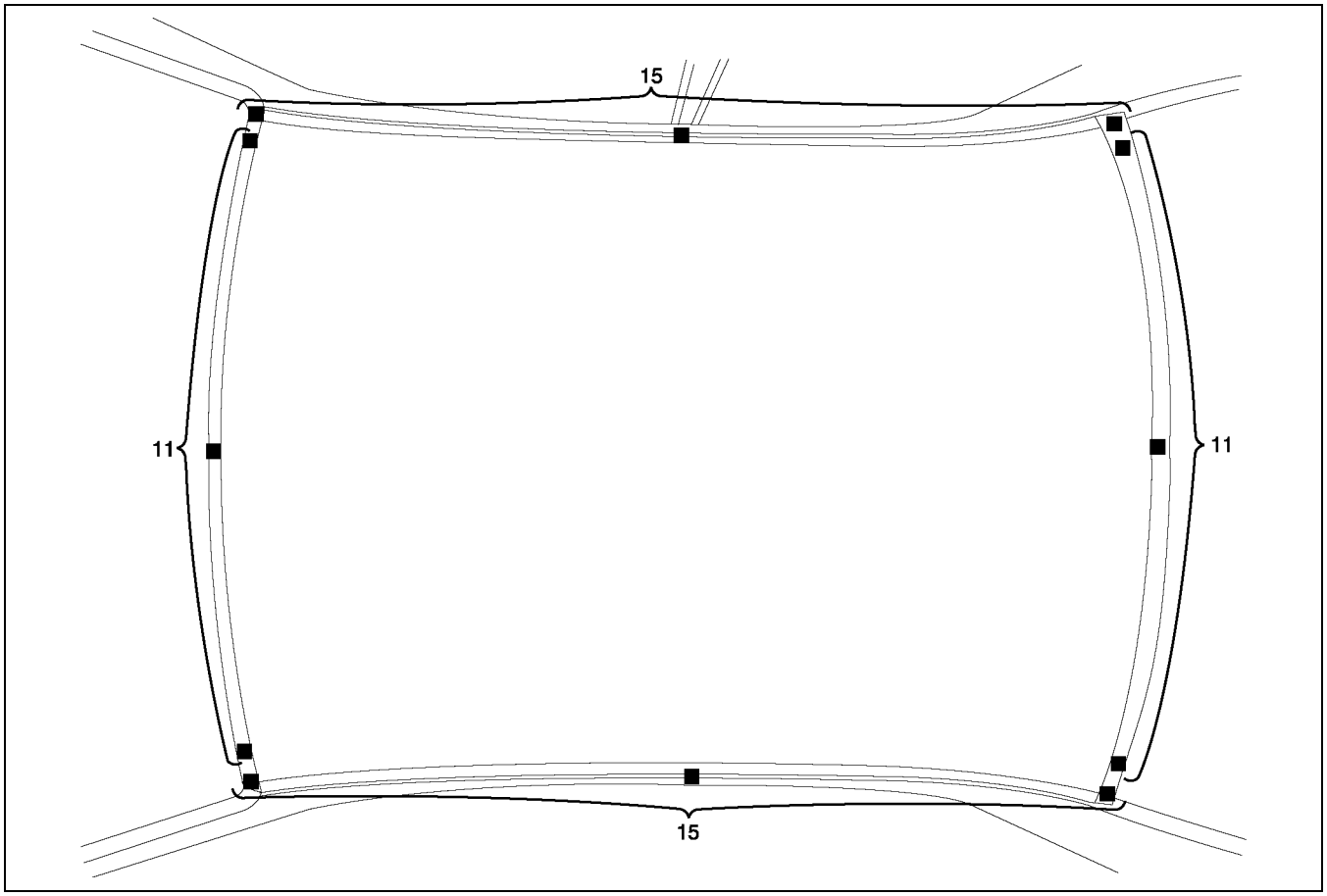

A6E9812B032

5HB

1. Drill holes for plug welds before installing new parts.
2. After trial-fitting new parts, make sure the related parts fit properly.

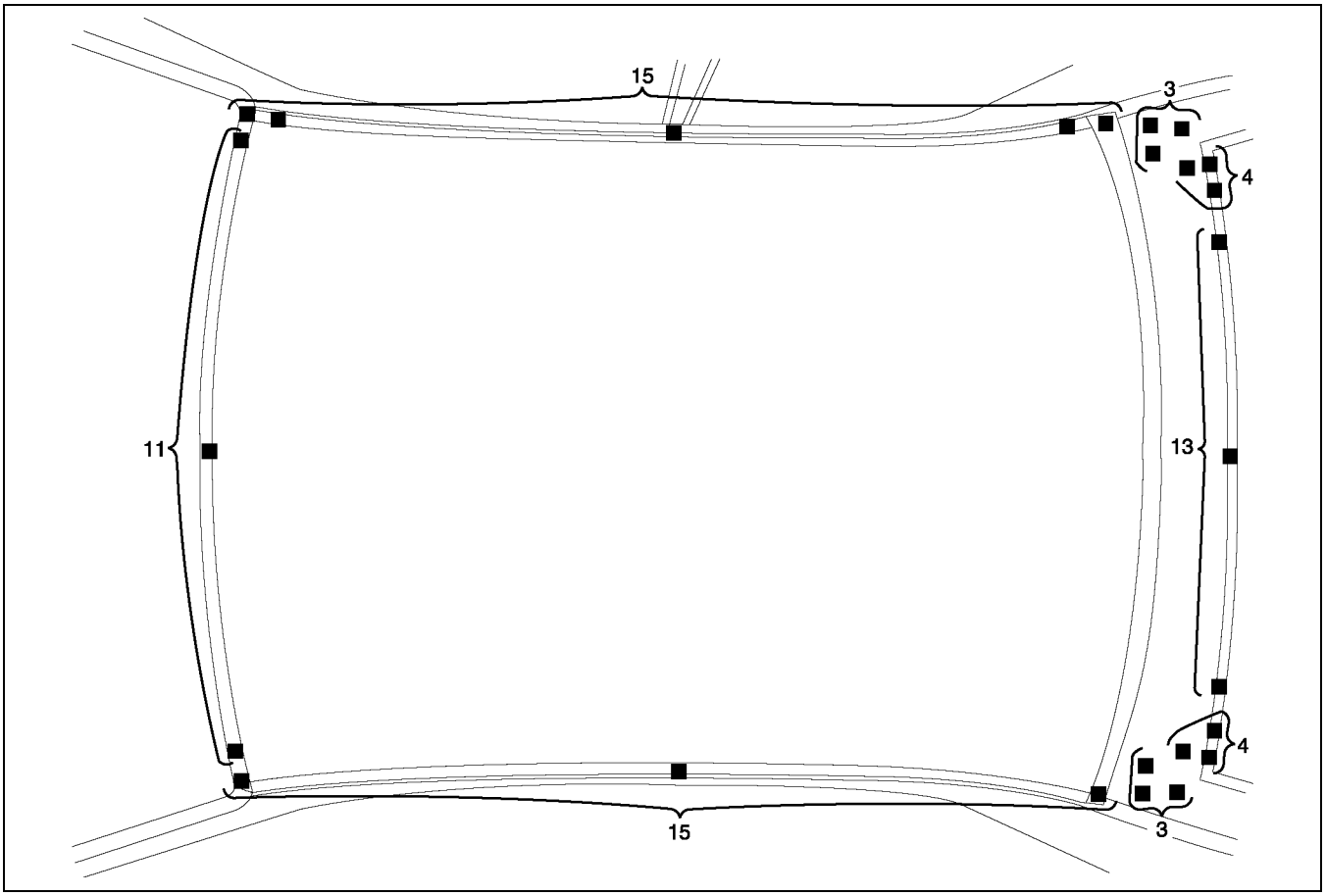

A6E9812B034

WATER-PROOF AND RUST PREVENTIVE TREATMENT

WATER-PROOF AND RUST PREVENTIVE TREATMENT IV-2
BODY SEALING IV-2
UNDER COATING IV-5
PVC PAINTING IV-6
RUST PREVENTIVE TREATMENT IV-7

WATER-PROOF AND RUST PREVENTIVE TREATMENT

BODY SEALING

A6E981407000B01

Sealant is applied to the parts where the panels meet and to the hemmed parts of the door panel and bonnet to provide waterproofing and rust proofing.

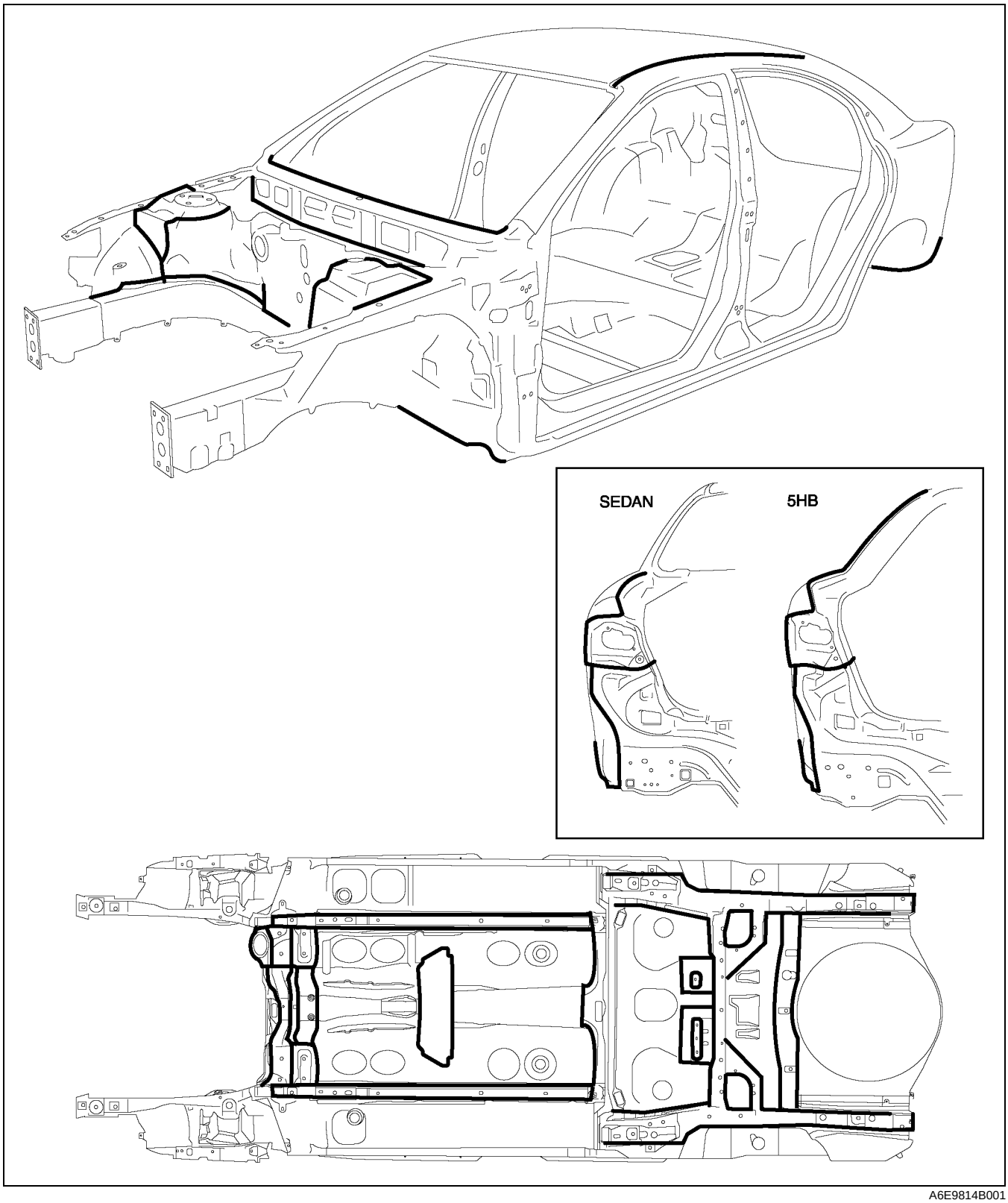

A6E9814B001

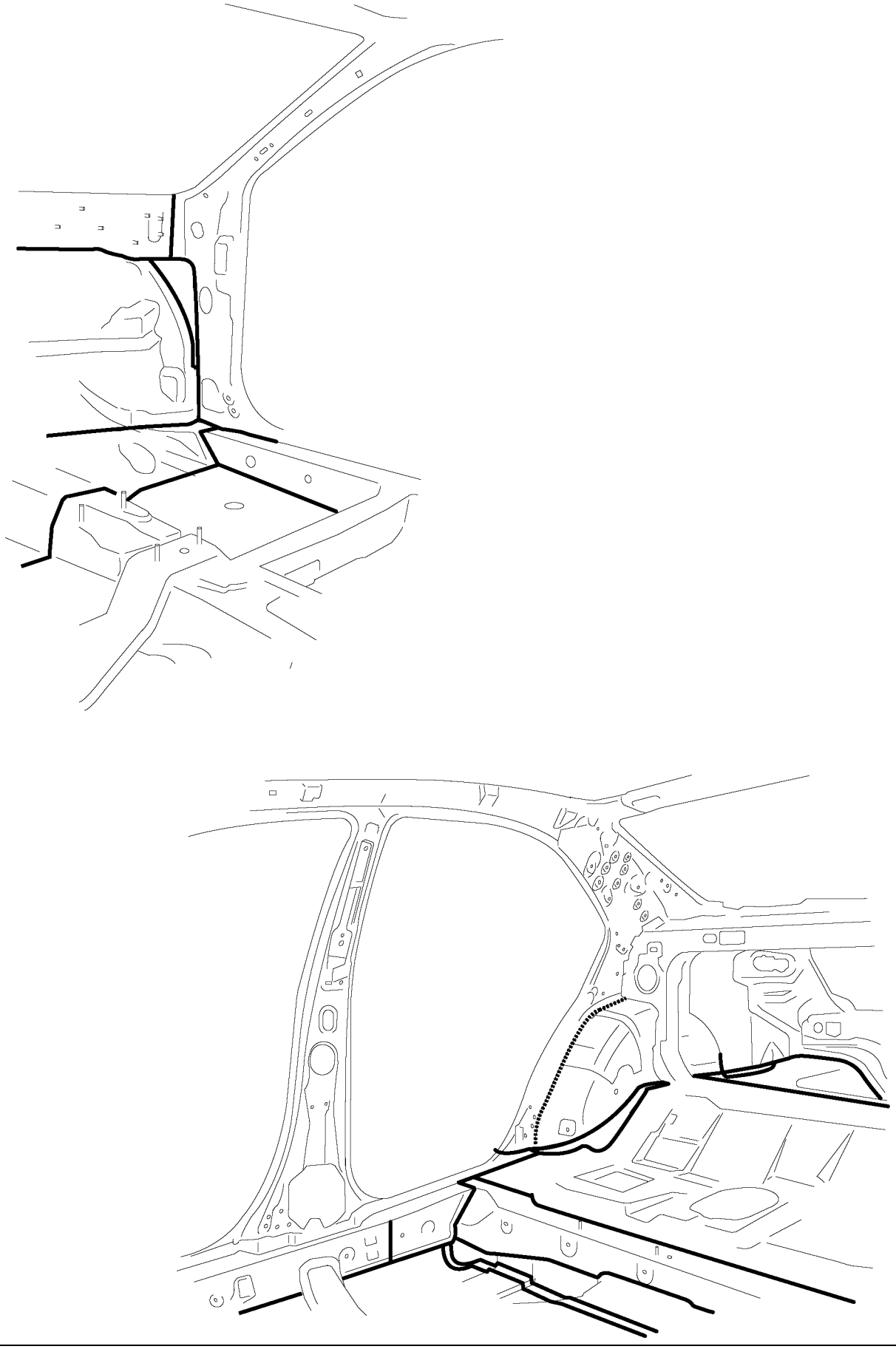

A6E9814B002

BONNET

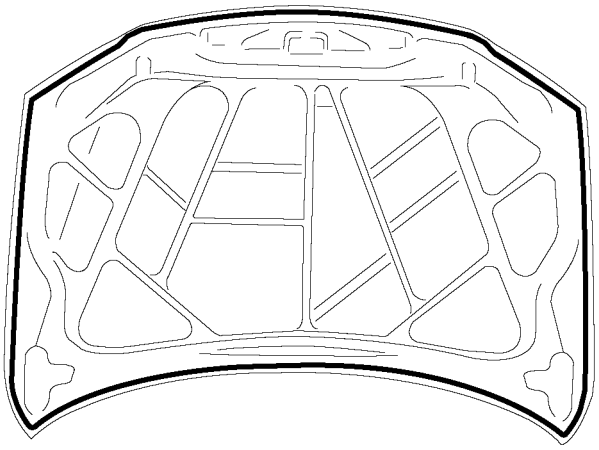

DOOR

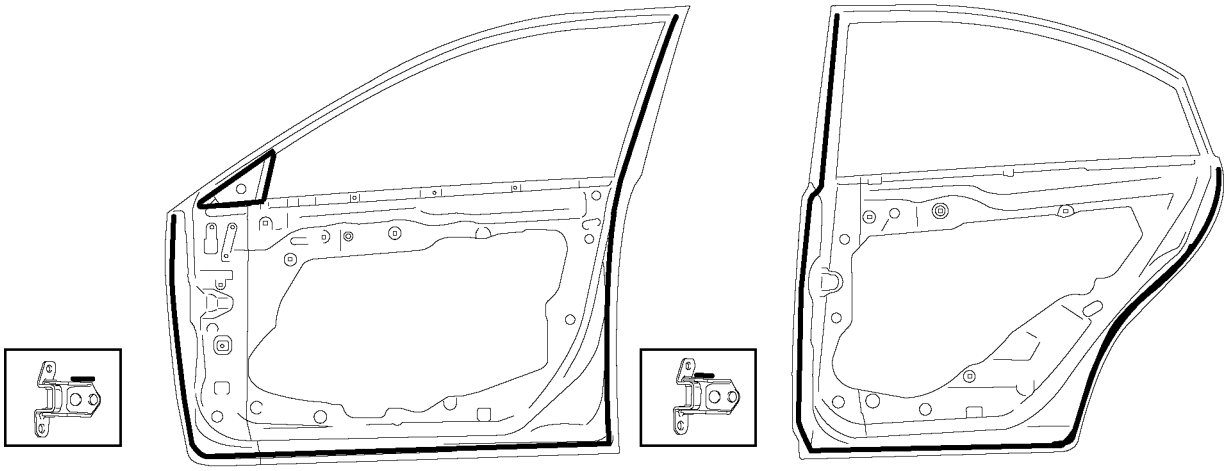

TRUNK LID



LIFTGATE

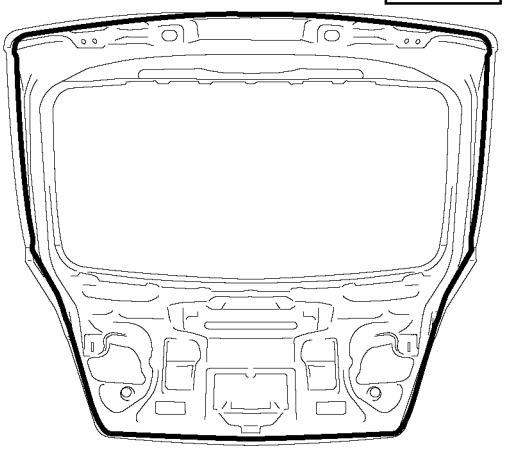

A6E9814B003

UNDER COATING

A6E981407000B02

The shaded areas indicated underbody locations that are undercoated to prevent noise and rusting.

European(L.H.D. U.K.)specs

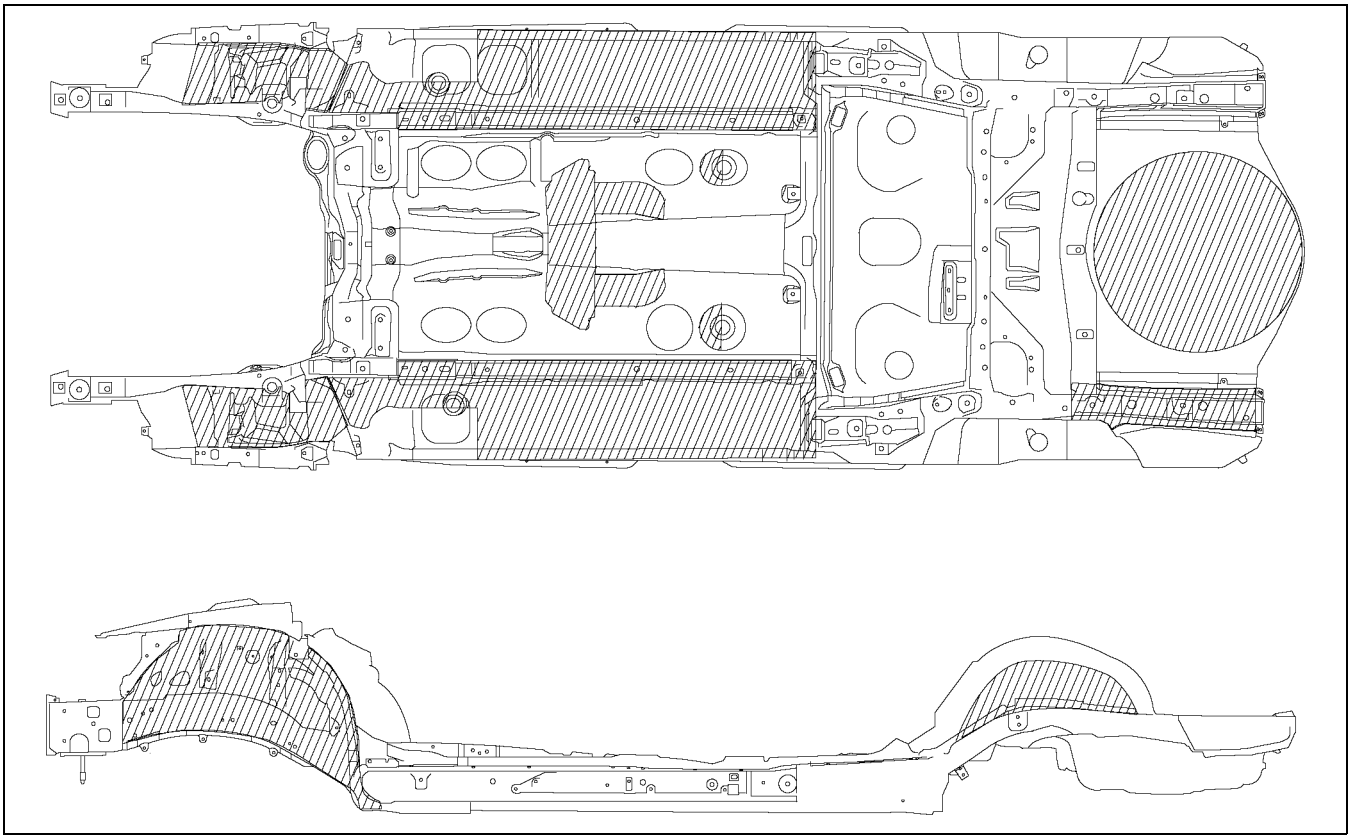

A6E9814B004

GCC specs

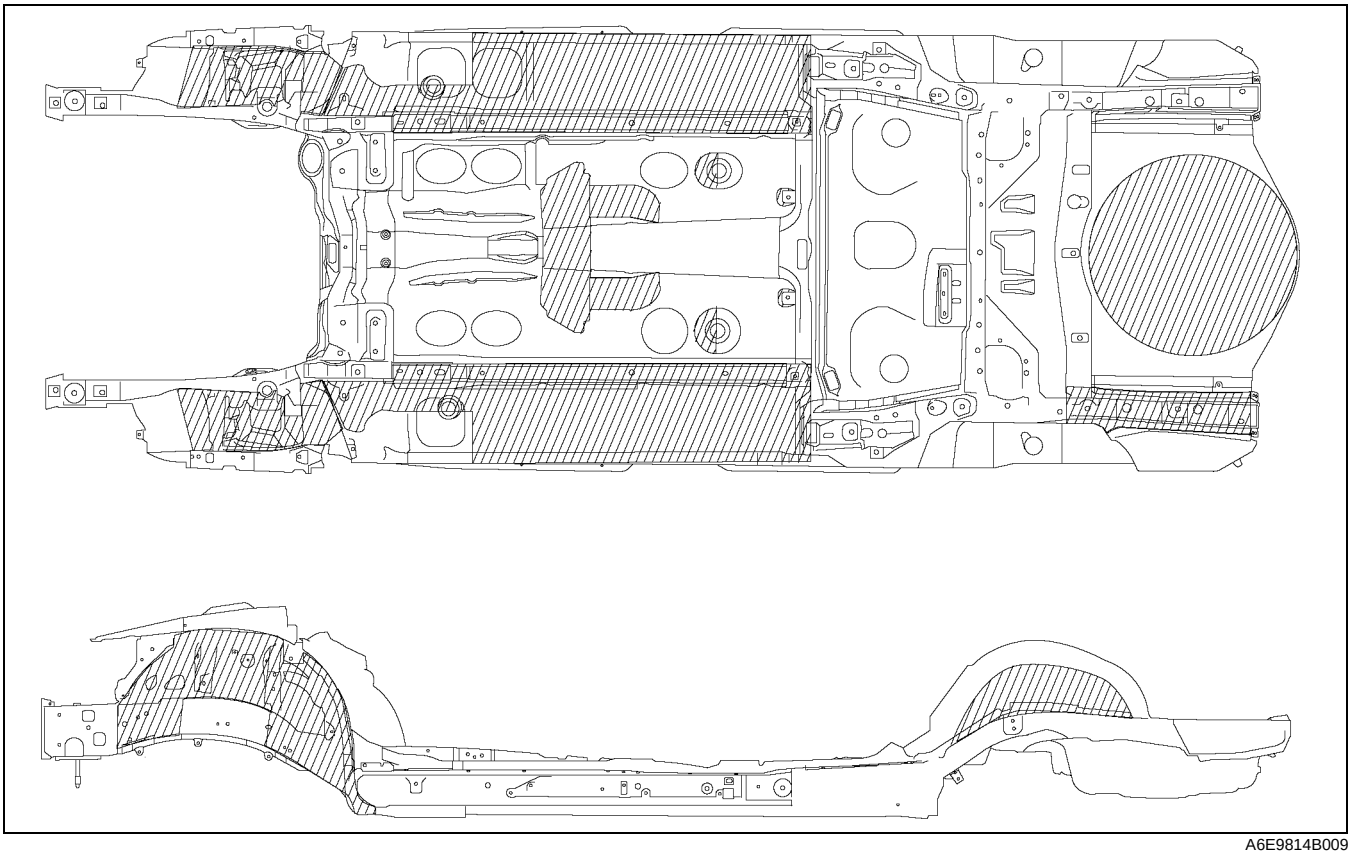

A6E9814B009

PVC PAINTING

A6E981407000B04

The coating locations are indicated by the shaded areas.

SEDAN

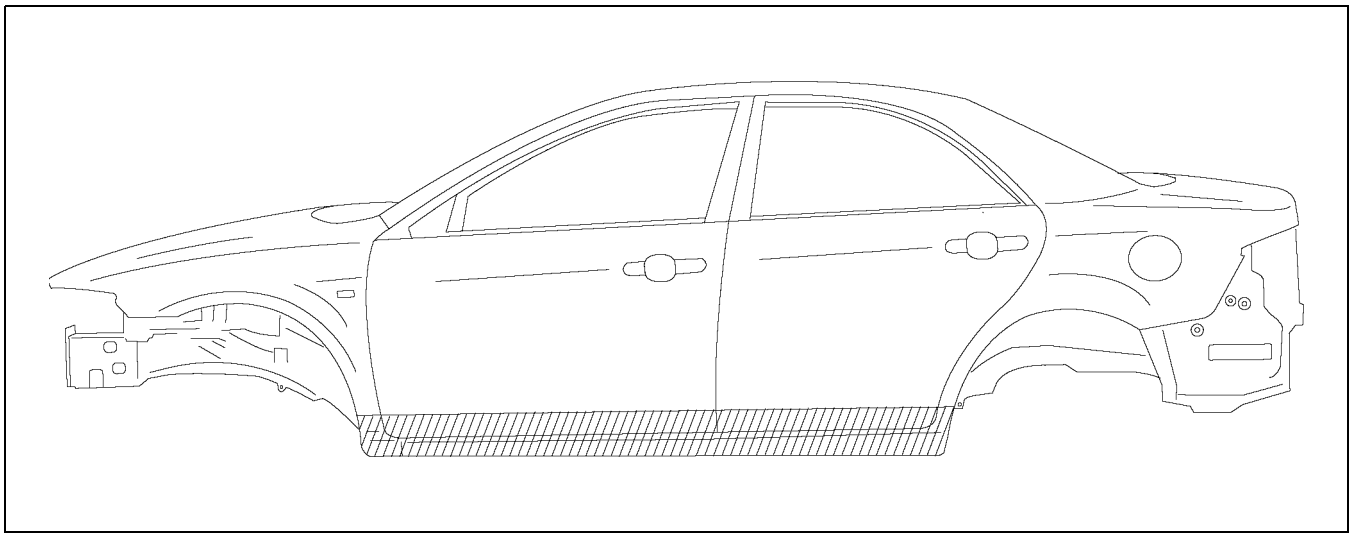

A6E9814B005

5HB

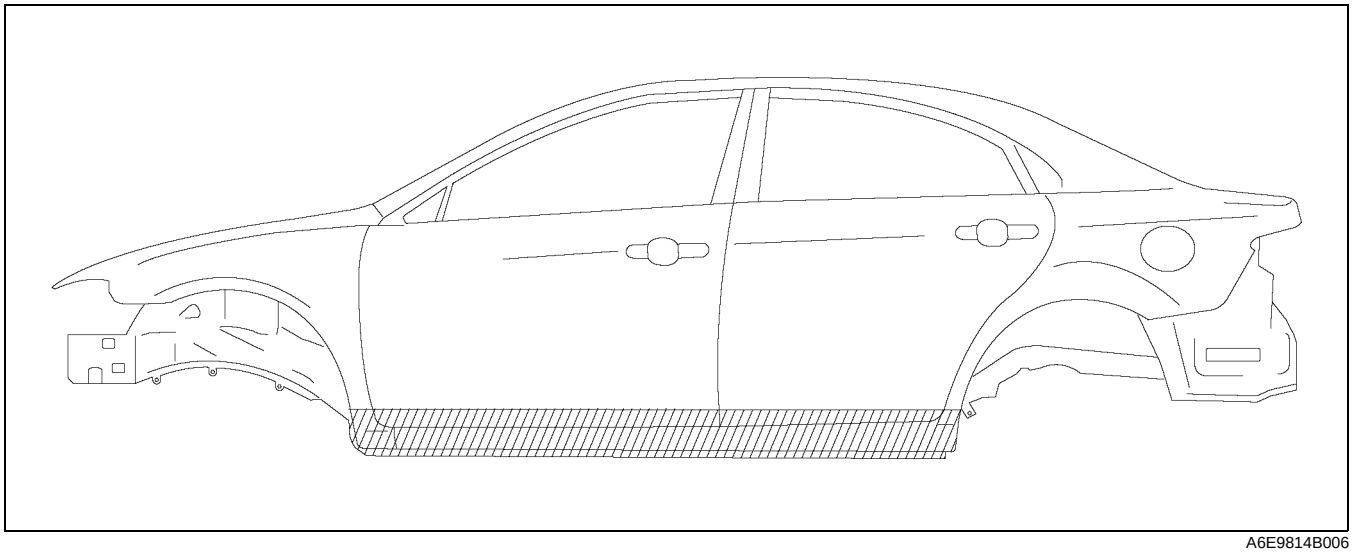

A6E9814B006

RUST PREVENTIVE TREATMENT

A6E981407000B03

The coating locations are indicated by the shaded areas.

SEDAN

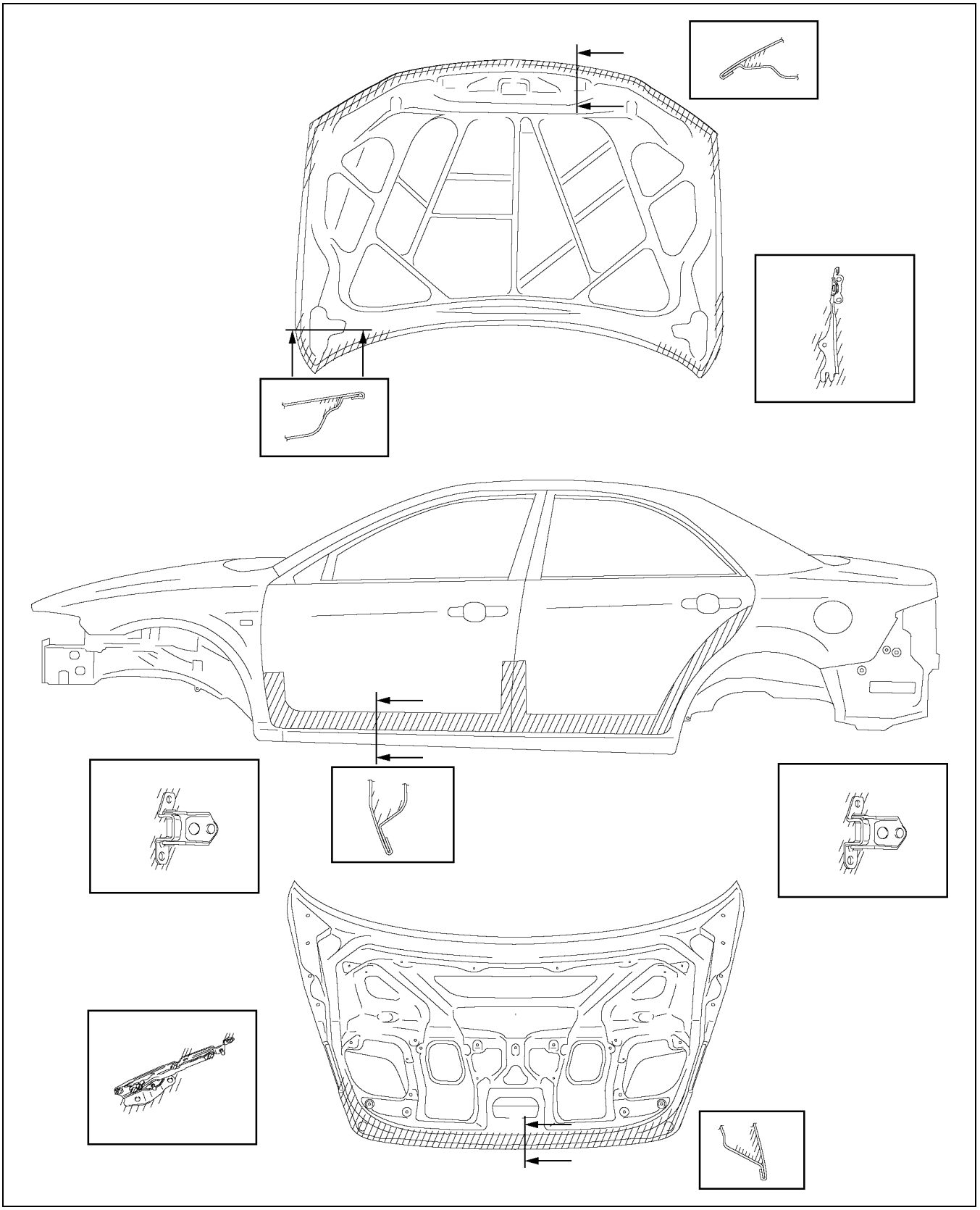

A6E9814B007

5HB

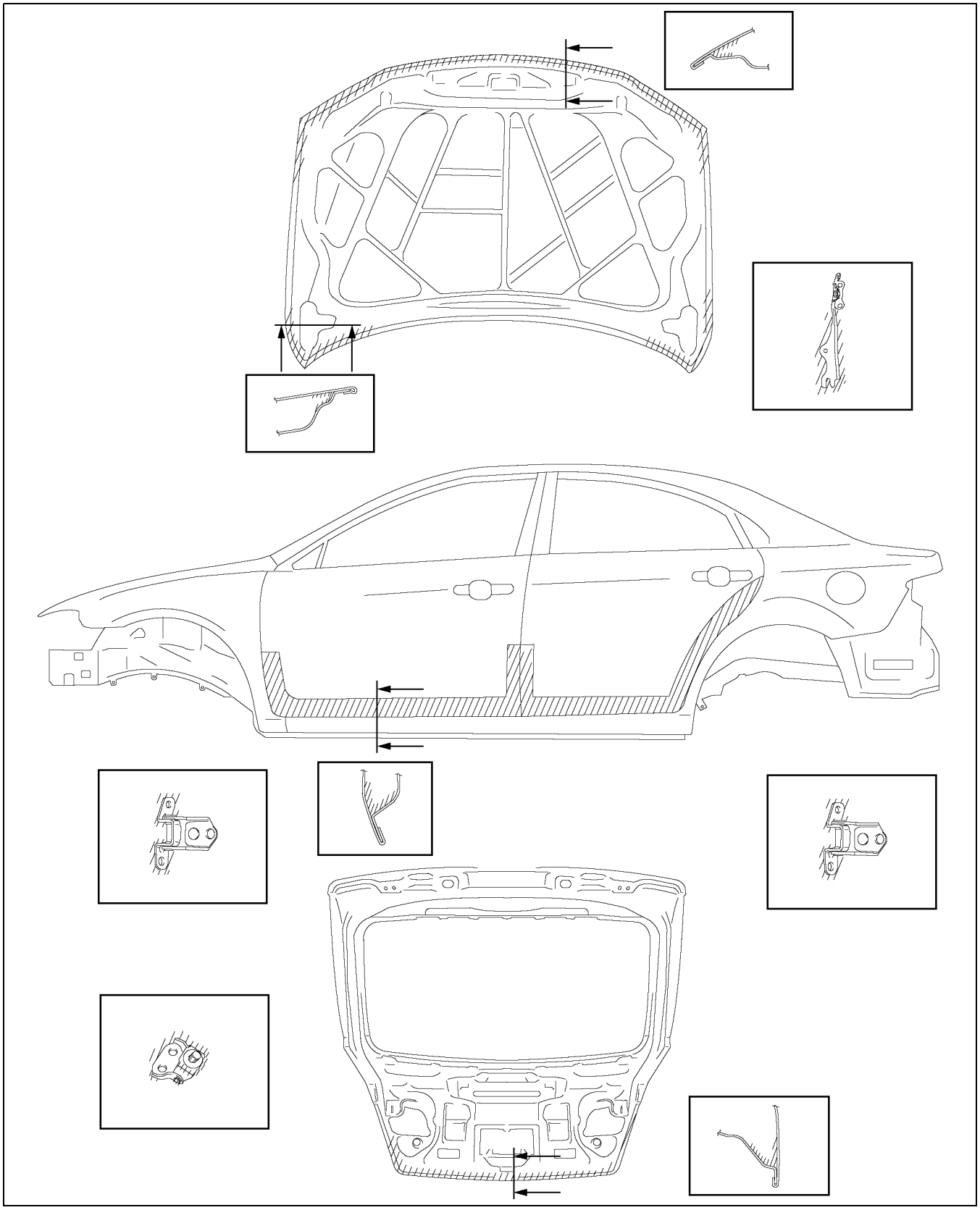

A6E9814B008

DIMENSIONS

DIMENSIONS V-2
UNDERBODY FLAT-PLANE DIMENSIONS..... V-2
UNDERBODY STRAIGHT-LINE DIMENSIONS V-3
FRONT BODY STRAIGHT-LINE DIMENSIONS (1) V-4
FRONT BODY STRAIGHT-LINE DIMENSIONS (2) V-5
CABIN SIDE FRAME STRAIGHT-LINE DIMENSIONS V-6
ROOM STRAIGHT-LINE DIMENSIONS (1) V-8
ROOM STRAIGHT-LINE DIMENSIONS (2) V-9
REAR BODY STRAIGHT-LINE DIMENSIONS .. V-11

DIMENSIONS

UNDERBODY FLAT-PLANE DIMENSIONS

A6E981653010B01

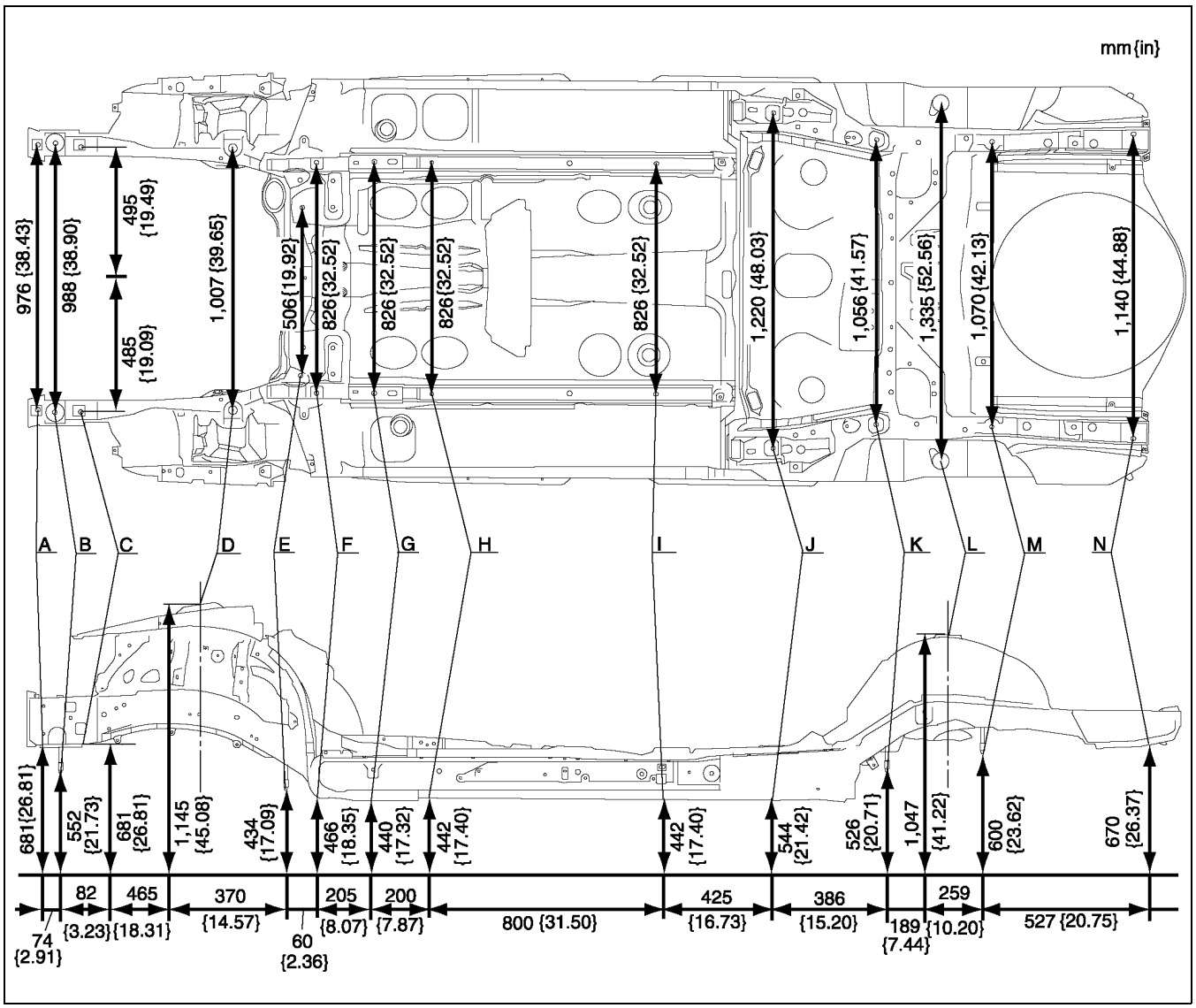

A6E9816B001

Point symbol	Designation	Hole diameter or bolt or nut size mm {in}
A	Front side frame standard hole	ø16 {0.63}
B	Front crossmember mounting bolt	M14 {0.55}
C	Front side frame standard hole	ø16 {0.63}
D	Front suspension mounting block standard hole	ø59 {2.32}
E	Front crossmember mounting bolt	M14 {0.55}
F	Front frame rear standard hole	ø18 {0.71}
G	Front frame rear standard hole	ø16 {0.63}
H	Front B frame standard hole	ø12 {0.47}

Point symbol	Designation	Hole diameter or bolt or nut size mm {in}
I	Front B frame standard hole	14 × 20 {0.55 × 0.79}
J	Rear side frame standard hole	ø20 {0.79}
K	Rear crossmember mounting bolt	M14 {0.55}
L	Rear suspension housing bolt	M6 {0.24}
M	Rear crossmember mounting bolt	M14 {0.55}
N	Rear side frame standard hole	16 × 20 {0.63 × 0.79}

UNDERBODY STRAIGHT-LINE DIMENSIONS

A6E981653010B02

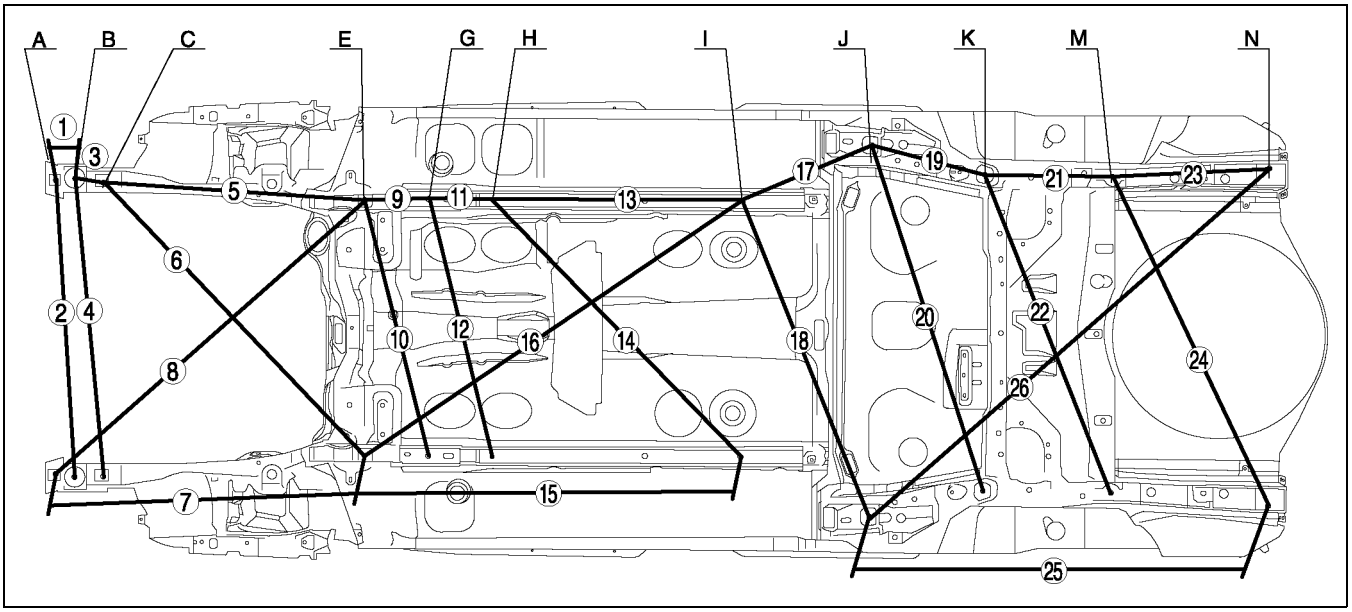

A6E9816B002

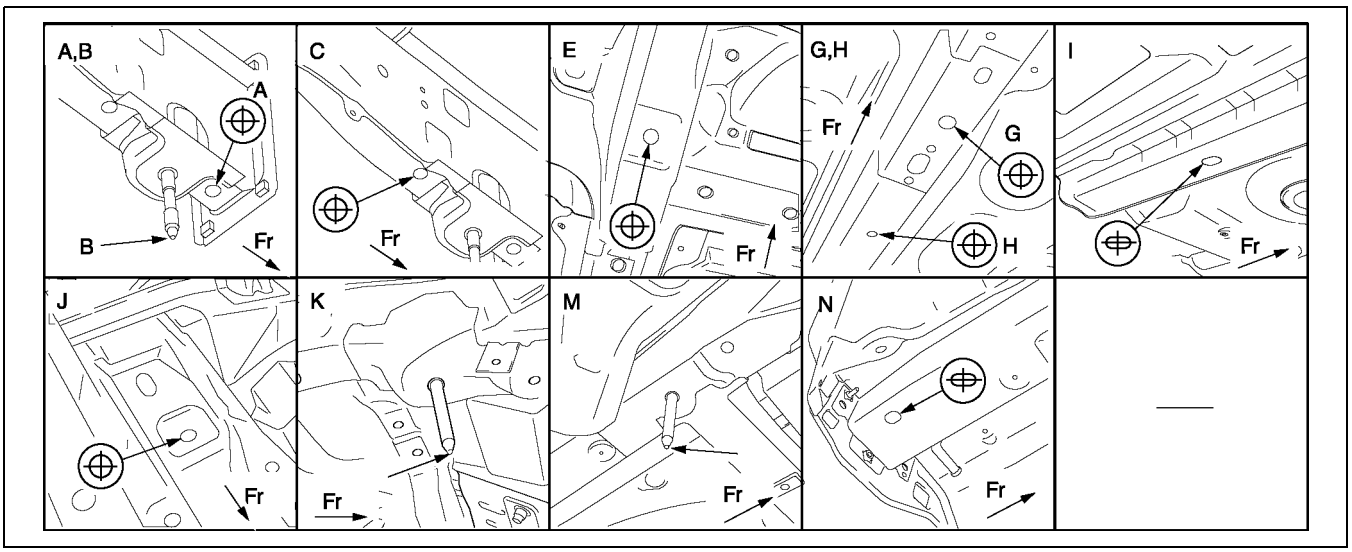

A6E9816B003

Measured location	Dimensions mm {in}
1	149 {5.87}
2	993 {39.09}
3	152 {5.98}
4	991 {39.02}
5	924 {36.38}
6	1,293 {50.91}
7	1,076 {42.36}
8	1,401 {55.16}
9	207 {8.15}
10	851 {33.50}
11	200 {7.87}
12	850 {33.46}
13	800 {31.50}

Measured location	Dimensions mm {in}
14	1,150 {45.28}
15	1,205 {47.44}
16	1,461 {57.52}
17	479 {18.86}
18	1,112 {43.78}
19	395 {15.55}
20	1,202 {47.32}
21	454 {17.87}
22	1,156 {45.51}
23	532 {20.94}
24	1,226 {48.27}
25	1,366 {53.78}
26	1,805 {71.06}

FRONT BODY STRAIGHT-LINE DIMENSIONS (1)

A6E981653020B01

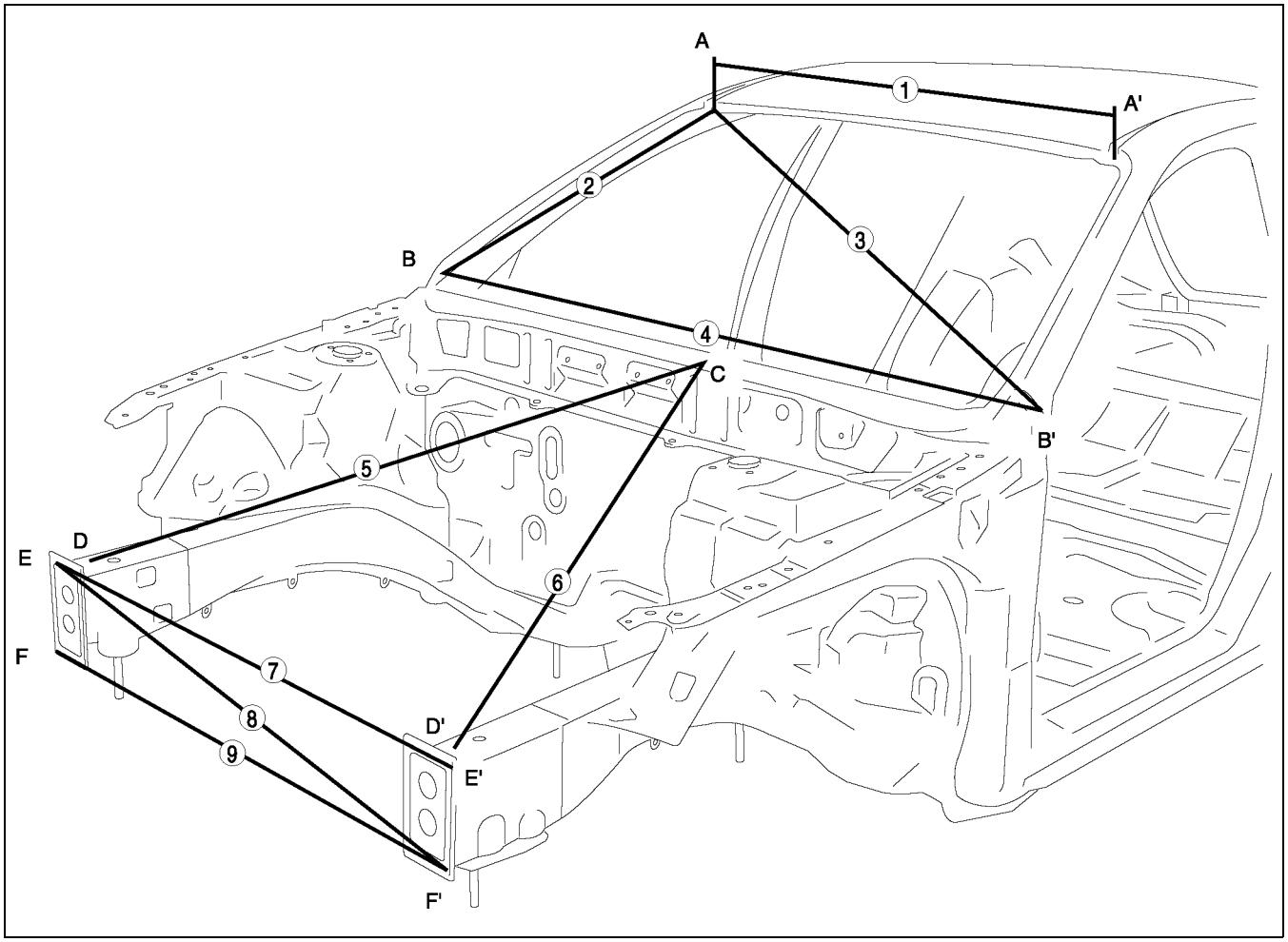

A6E9816B004

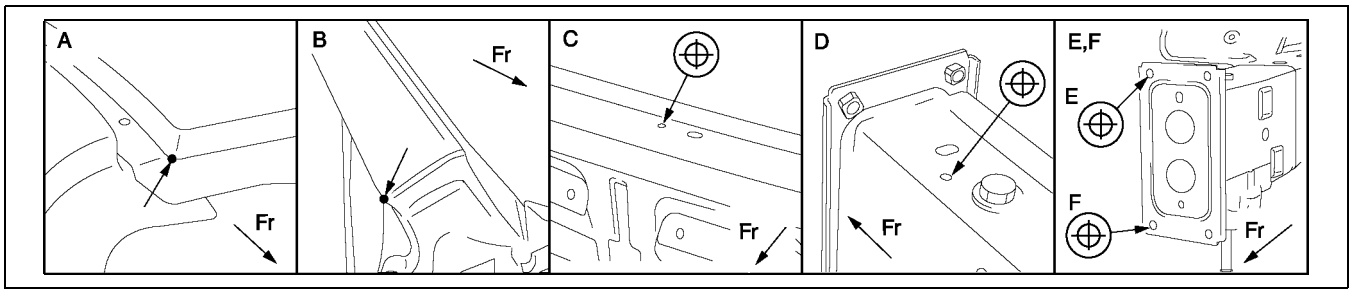

A6E9816B005

Measured location	Dimensions mm {in}
1	1,023 {40.28}
2	749 {29.49}
3	1,458 {57.40}
4	1,529 {60.20}
5	1,070 {42.13}

Measured location	Dimensions mm {in}
6	1,085 {42.72}
7	1,070 {42.13}
8	1,084 {42.68}
9	1,070 {42.13}

FRONT BODY STRAIGHT-LINE DIMENSIONS (2)

A6E981653020B02

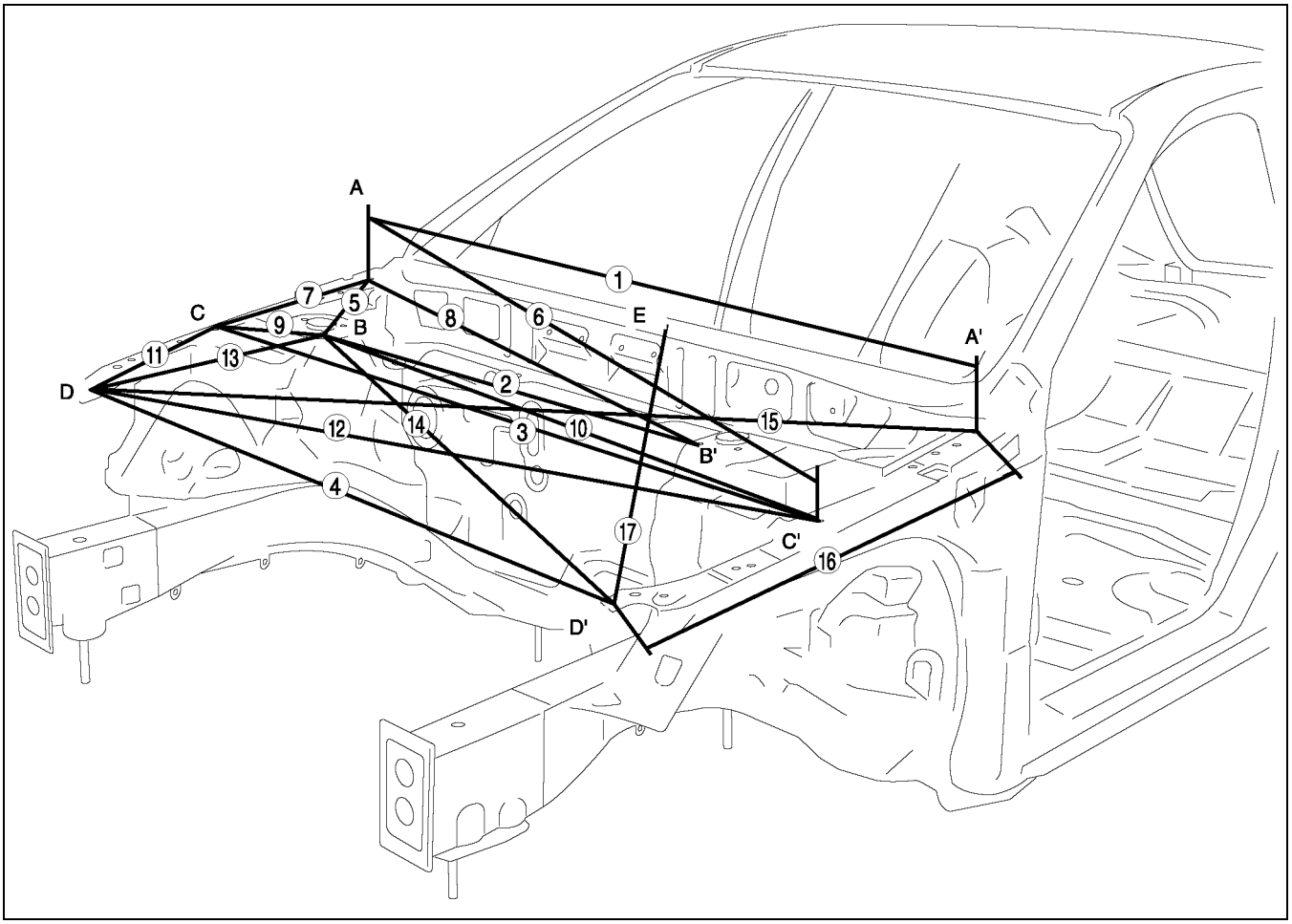

A6E9816B006

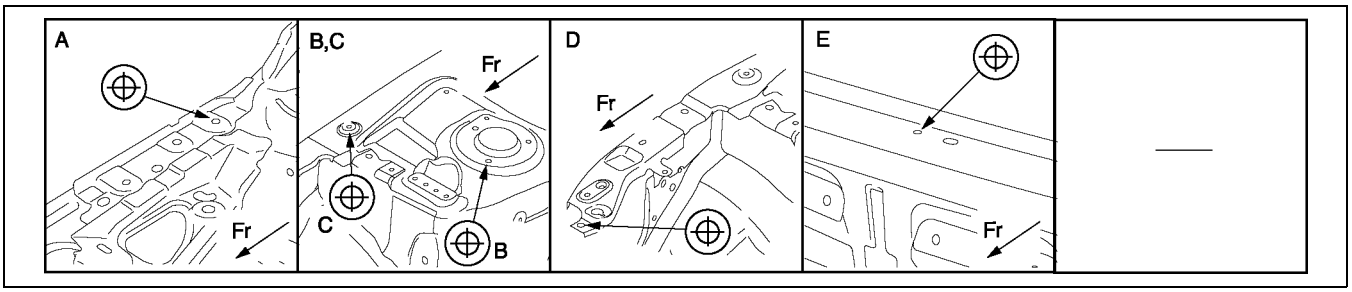

A6E9816B007

Measured location	Dimensions mm {in}
1	1,480 {58.27}
2	959 {37.76}
3	1,481 {58.31}
4	1,340 {52.76}
5	452 {17.80}
6	1,538 {60.55}
7	418 {16.46}
8	1,274 {50.16}
9	268 {10.55}

Measured location	Dimensions mm {in}
10	1,221 {48.07}
11	363 {14.29}
12	1,455 {57.28}
13	451 {17.76}
14	1,220 {48.03}
15	1,608 {63.31}
16	777 {30.59}
17	1,009 {39.72}

CABIN SIDE FRAME STRAIGHT-LINE DIMENSIONS

A6E981670010B01

SEDAN

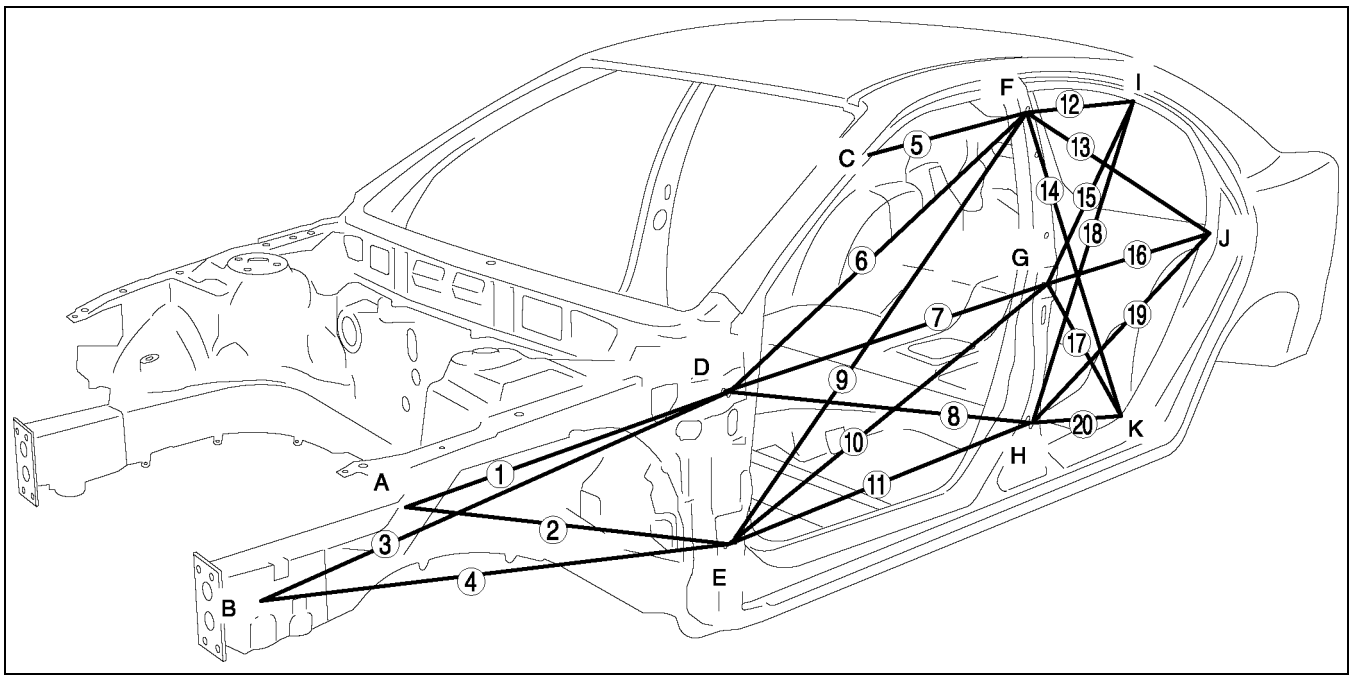

A6E9816B008

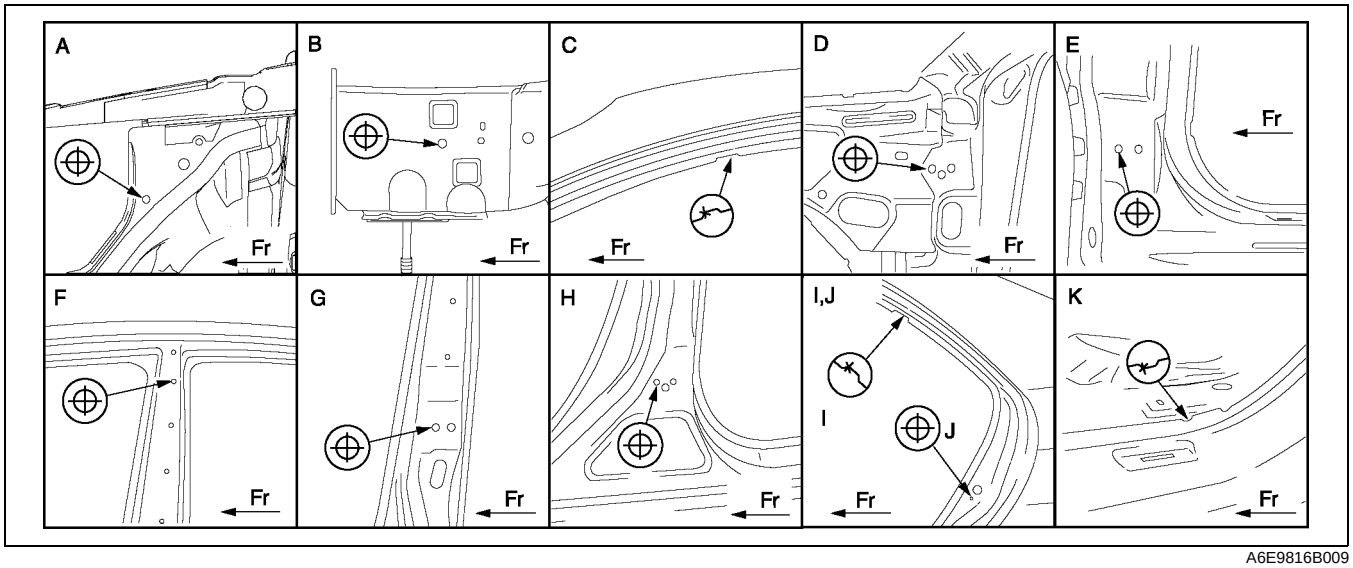

A6E9816B009

Measured location	Dimensions mm {in}
1	692 {27.24}
2	747 {29.41}
3	998 {39.29}
4	968 {38.11}
5	451 {17.76}
6	1,349 {53.11}
7	1,144 {45.04}
8	1,144 {45.04}
9	1,501 {59.09}
10	1,204 {47.40}

Measured location	Dimensions mm {in}
11	1,093 {43.03}
12	662 {26.06}
13	943 {37.13}
14	979 {38.54}
15	864 {34.02}
16	921 {36.26}
17	683 {26.89}
18	1,093 {43.03}
19	1,004 {39.53}
20	536 {21.10}

5HB

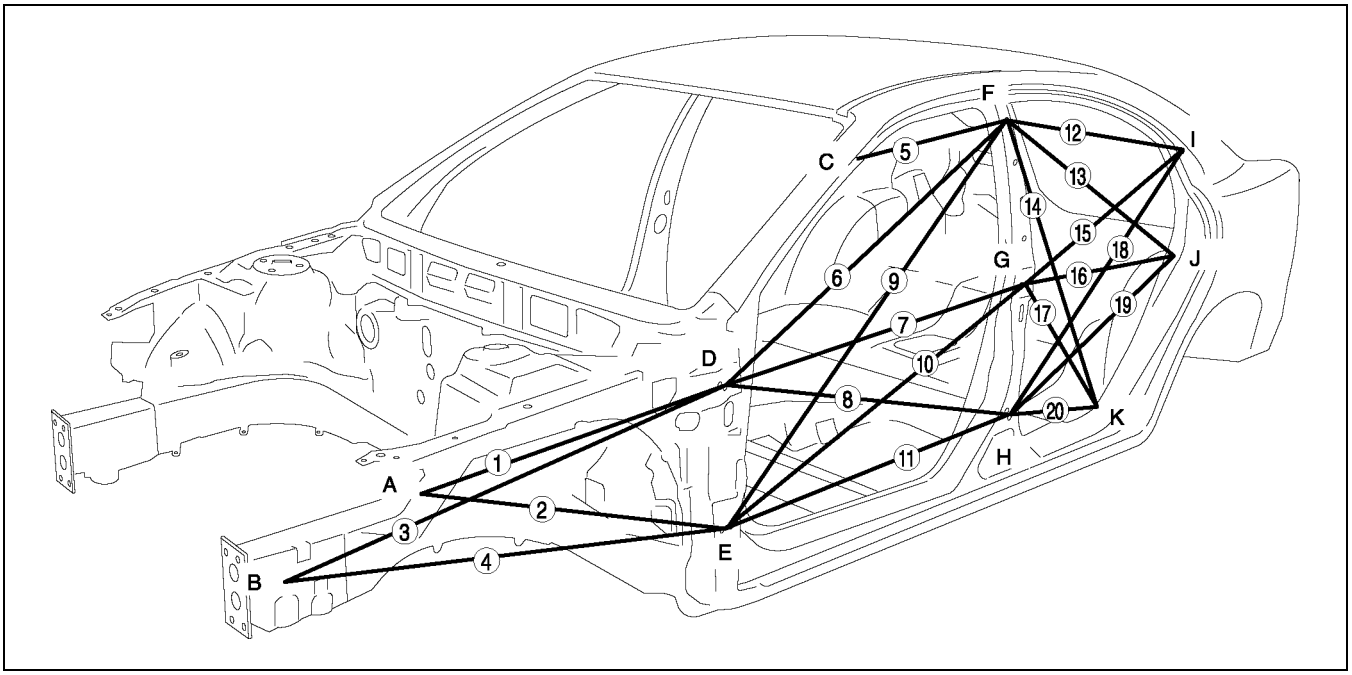

A6E9816B010

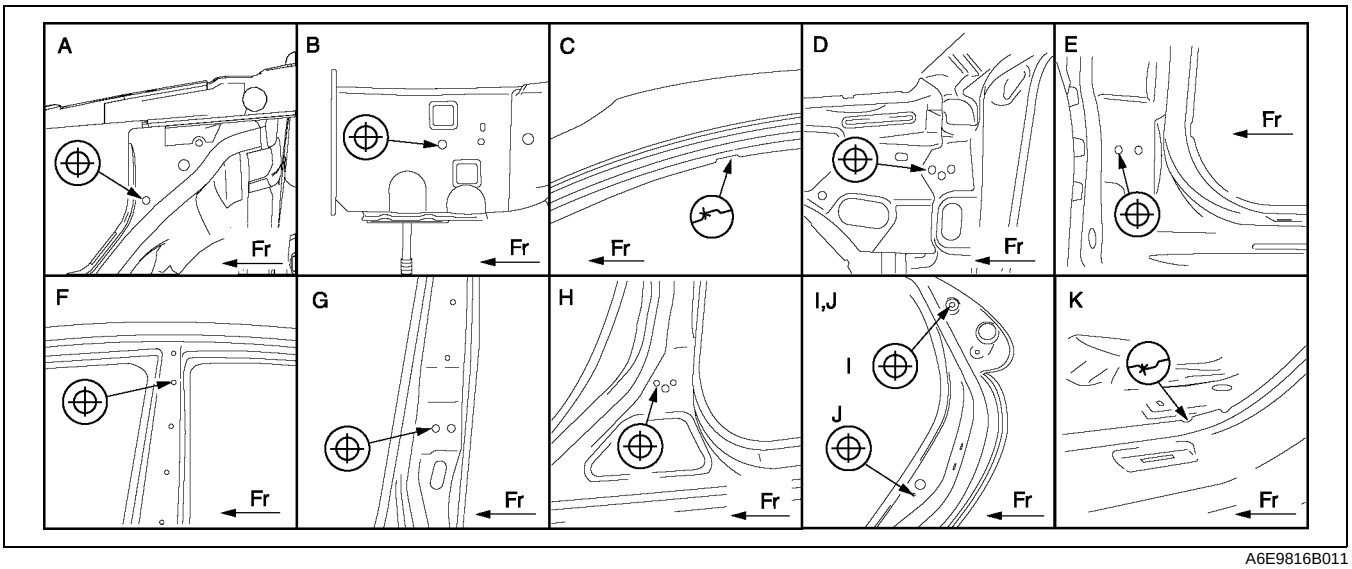

A6E9816B011

Measured location	Dimensions mm {in}
1	692 {27.24}
2	747 {29.41}
3	998 {39.29}
4	968 {38.11}
5	451 {17.76}
6	1,349 {53.11}
7	1,144 {45.04}
8	1,144 {45.04}
9	1,501 {59.09}
10	1,204 {47.40}

Measured location	Dimensions mm {in}
11	1,093 {43.03}
12	908 {35.75}
13	943 {37.13}
14	979 {38.54}
15	1,050 {41.34}
16	921 {36.26}
17	683 {26.89}
18	1,231 {48.46}
19	1,004 {39.53}
20	536 {21.10}

ROOM STRAIGHT-LINE DIMENSIONS (1)

A6E981670001B01

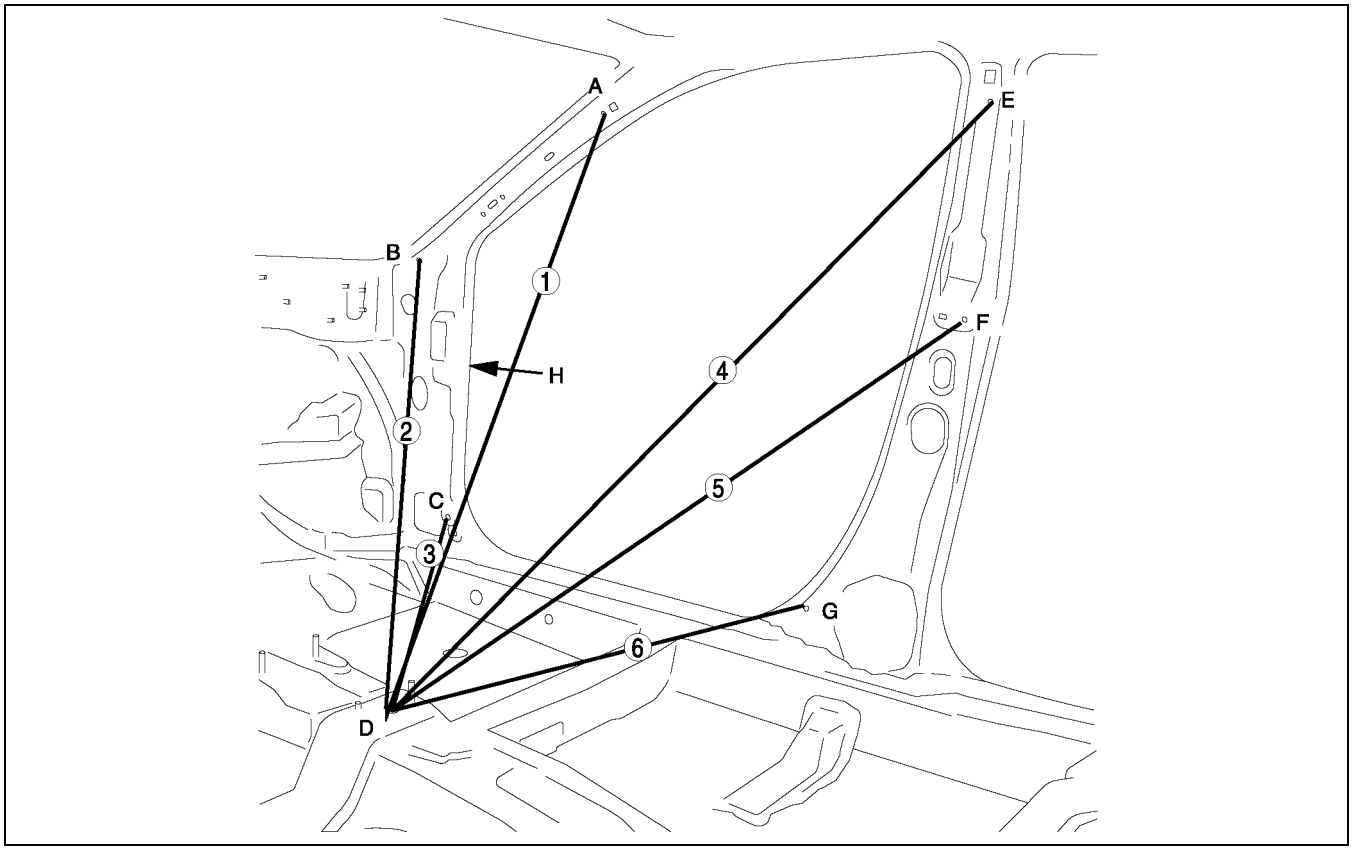

A6E9816B012

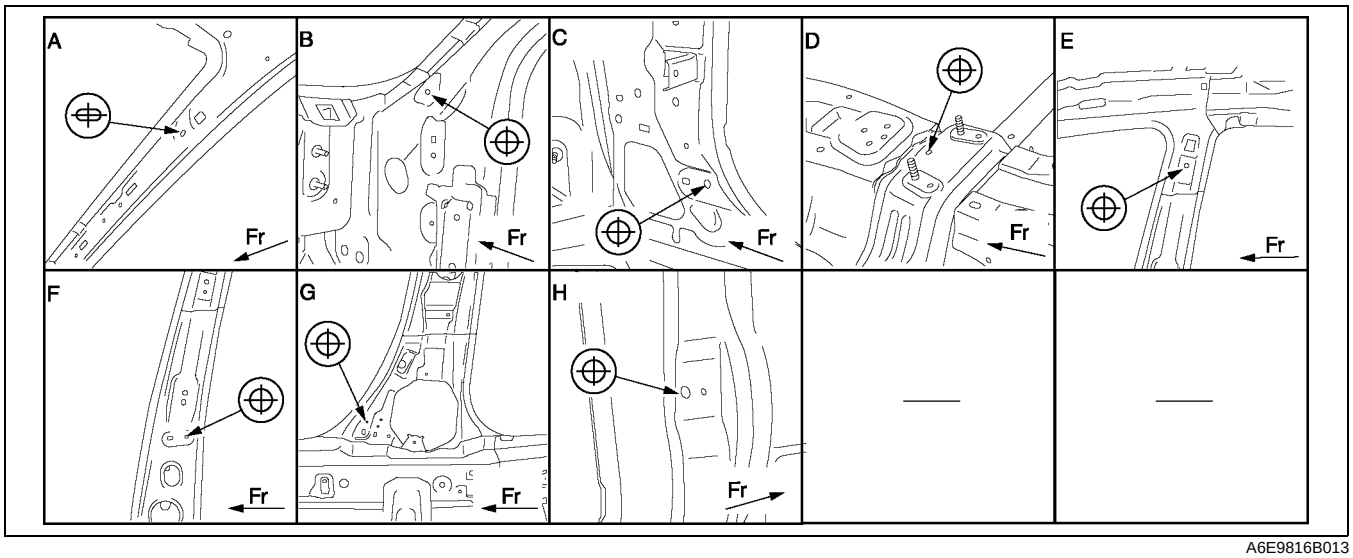

A6E9816B013

Measured location	Dimensions mm {in}
1	1,024 {40.31}
2	1,098 {43.23}
3	920 {36.22}
4	1,175 {46.26}

Measured location	Dimensions mm {in}
5	1,010 {39.76}
6	767 {30.20}
H-H'	1,487 {58.54}

ROOM STRAIGHT-LINE DIMENSIONS (2)

A6E981670001B02

SEDAN

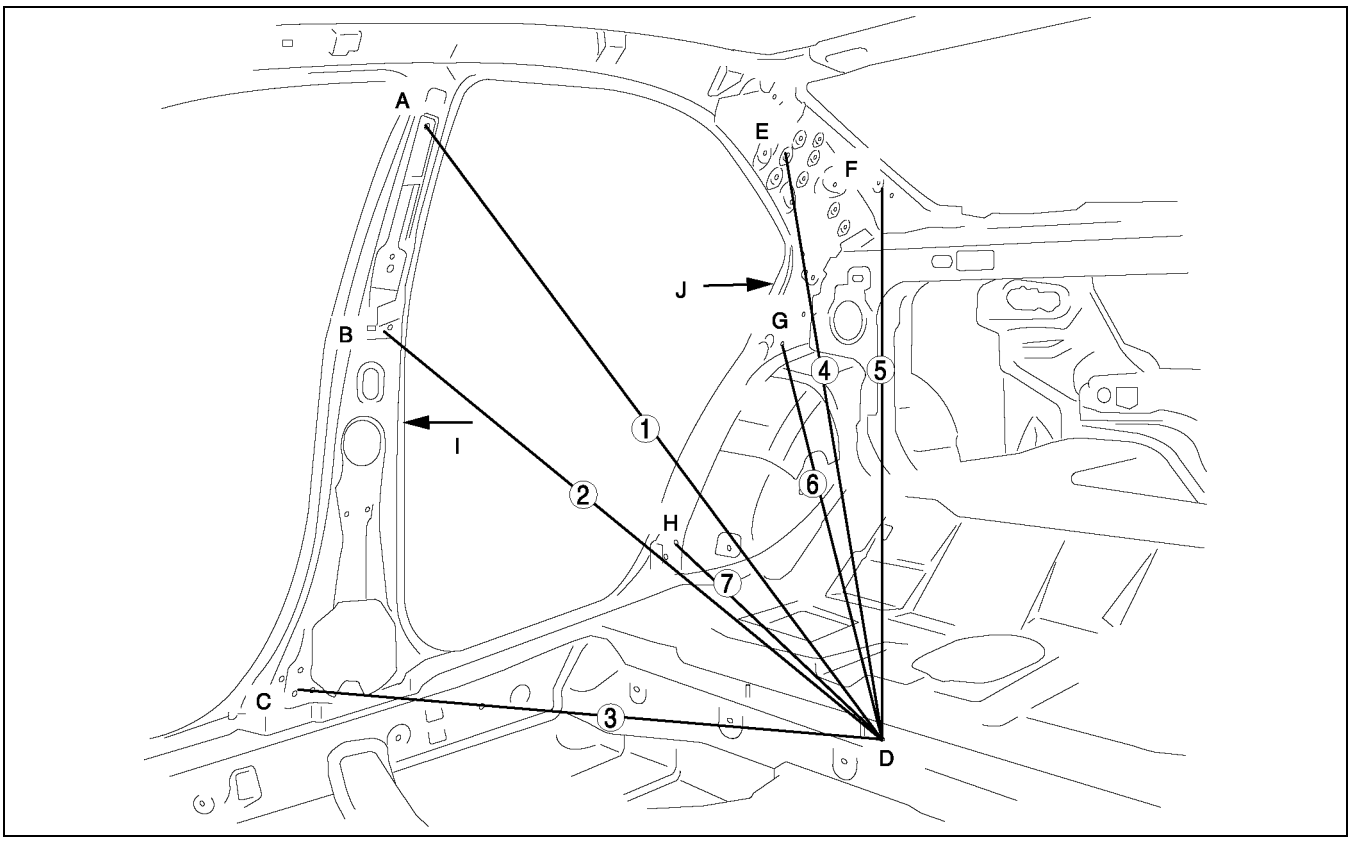

A6E9816B014

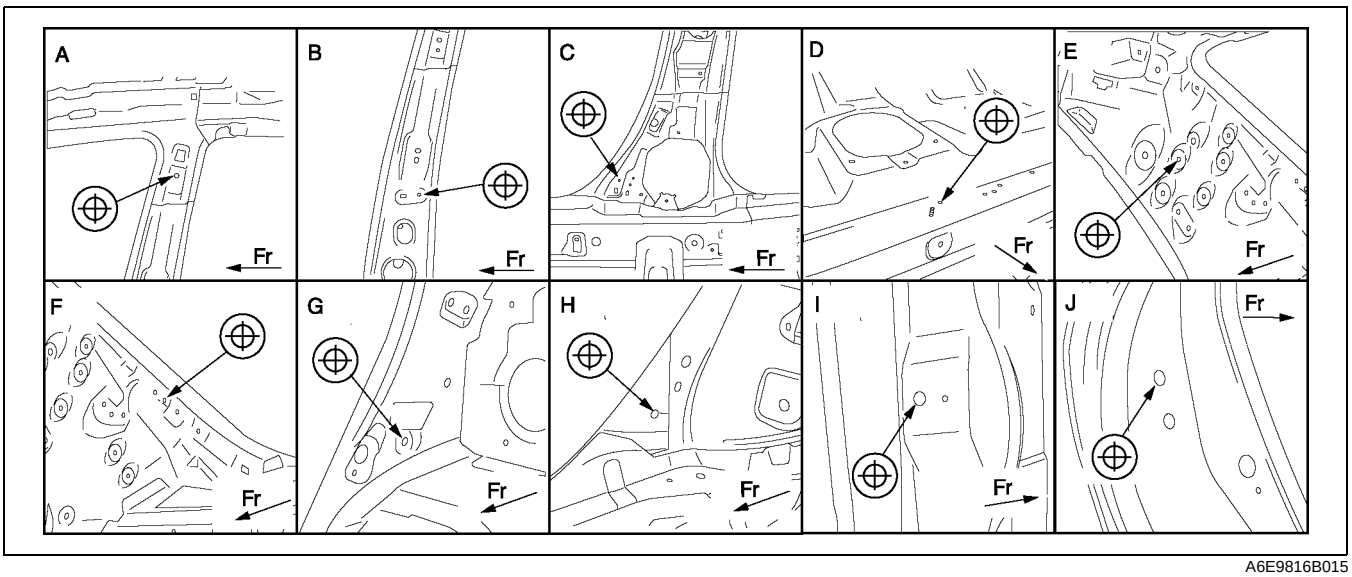

A6E9816B015

Measured location	Dimensions mm {in}
1	RH:1,141 {44.92}, LH:1,104 {43.46}
2	RH:996 {39.21}, LH:946 {37.24}
3	RH:952 {37.48}, LH:897 {35.31}
4	RH:1,193 {46.97}, LH:1,157 {45.55}
5	RH:1,285 {50.59}, LH:1,252 {49.29}

Measured location	Dimensions mm {in}
6	RH:1.079 {42.48}, LH:1,030 {40.55}
7	RH:833 {32.80}, LH:767 {30.20}
I-I'	1,584 {62.36}
J-J'	1,557 {61.30}

5HB

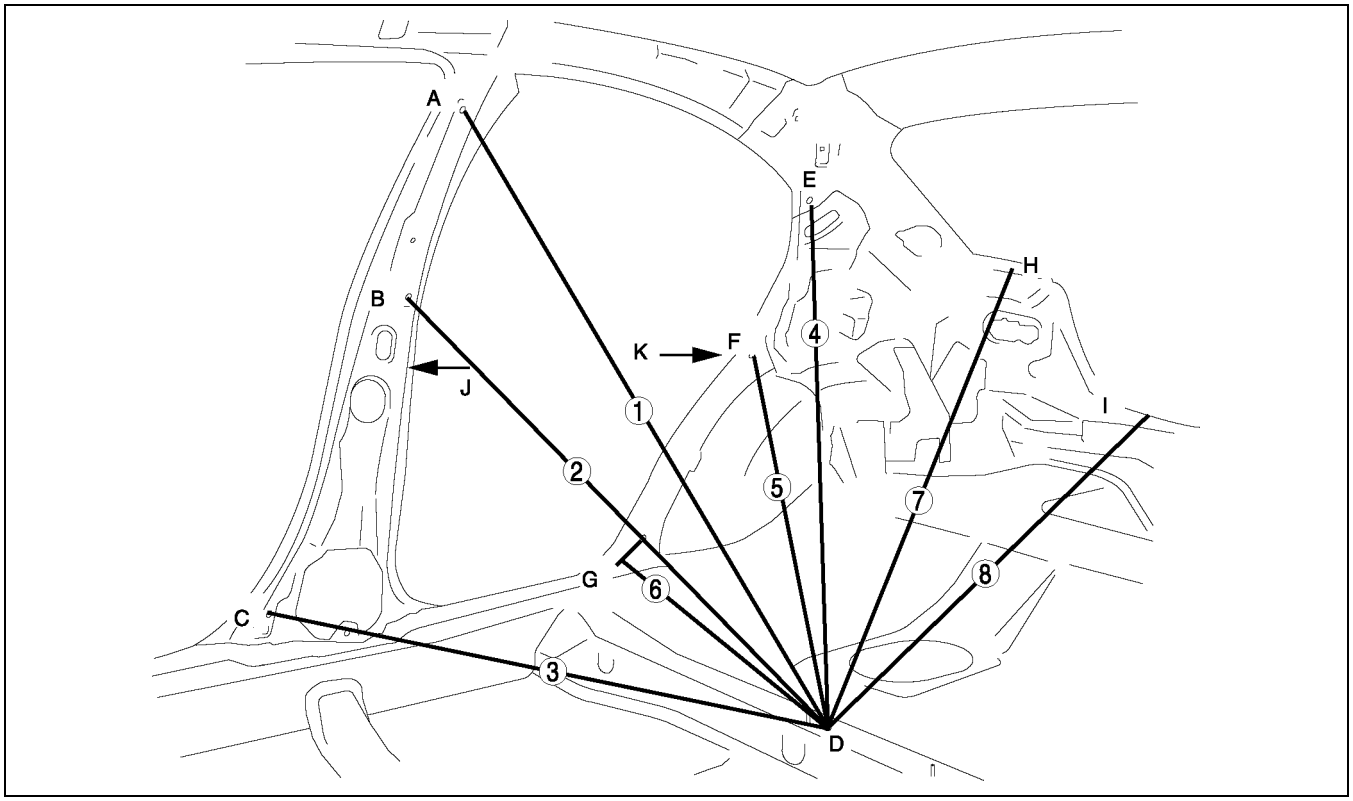

A6E9816B016

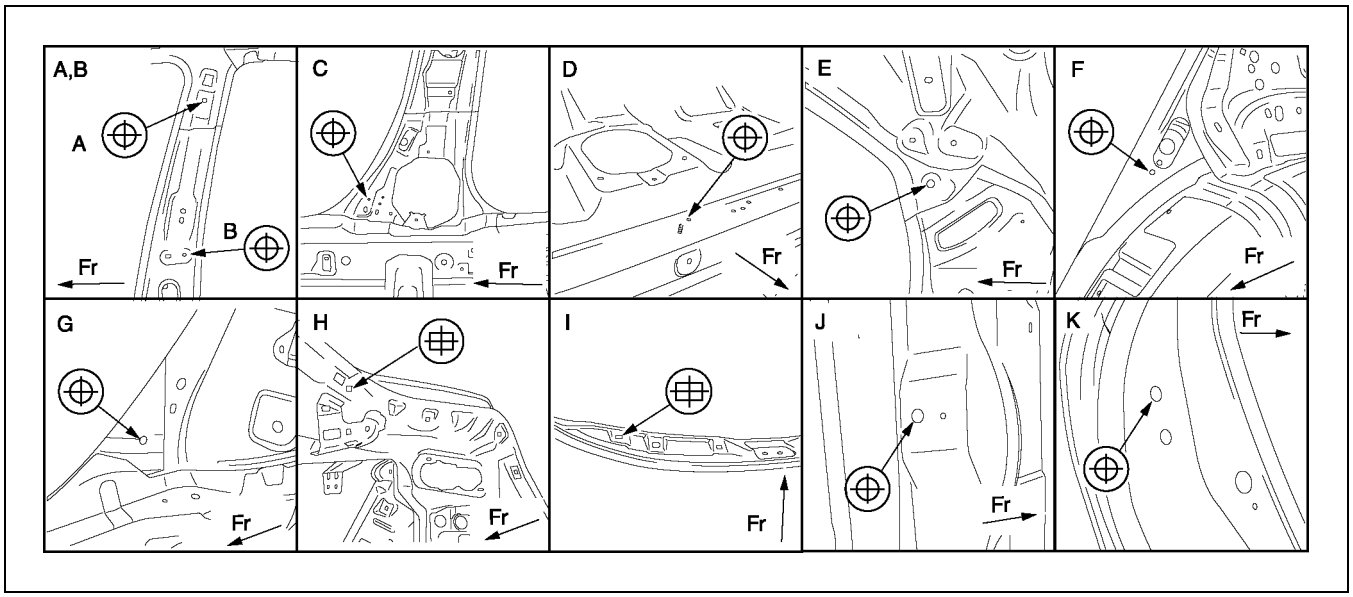

A6E9816B017

Measured location	Dimensions mm {in}
1	RH:1,141 {44.92}, LH:1,104 {43.46}
2	RH:996 {39.21}, LH:946 {37.24}
3	RH:952 {37.48}, LH:897 {35.31}
4	RH:1,204 {47.40}, LH:1,166 {45.91}
5	RH:1,027 {40.43}, LH:976 {38.43}

Measured location	Dimensions mm {in}
6	RH:833 {32.80}, LH:767 {30.20}
7	RH:1,402 {55.20}, LH:1,374 {54.09}
8	RH:1,671 {65.79}, LH:1,657 {65.24}
J-J'	1,584 {62.36}
K-K'	1,557 {61.30}

REAR BODY STRAIGHT-LINE DIMENSIONS

A6E981670002B01

SEDAN

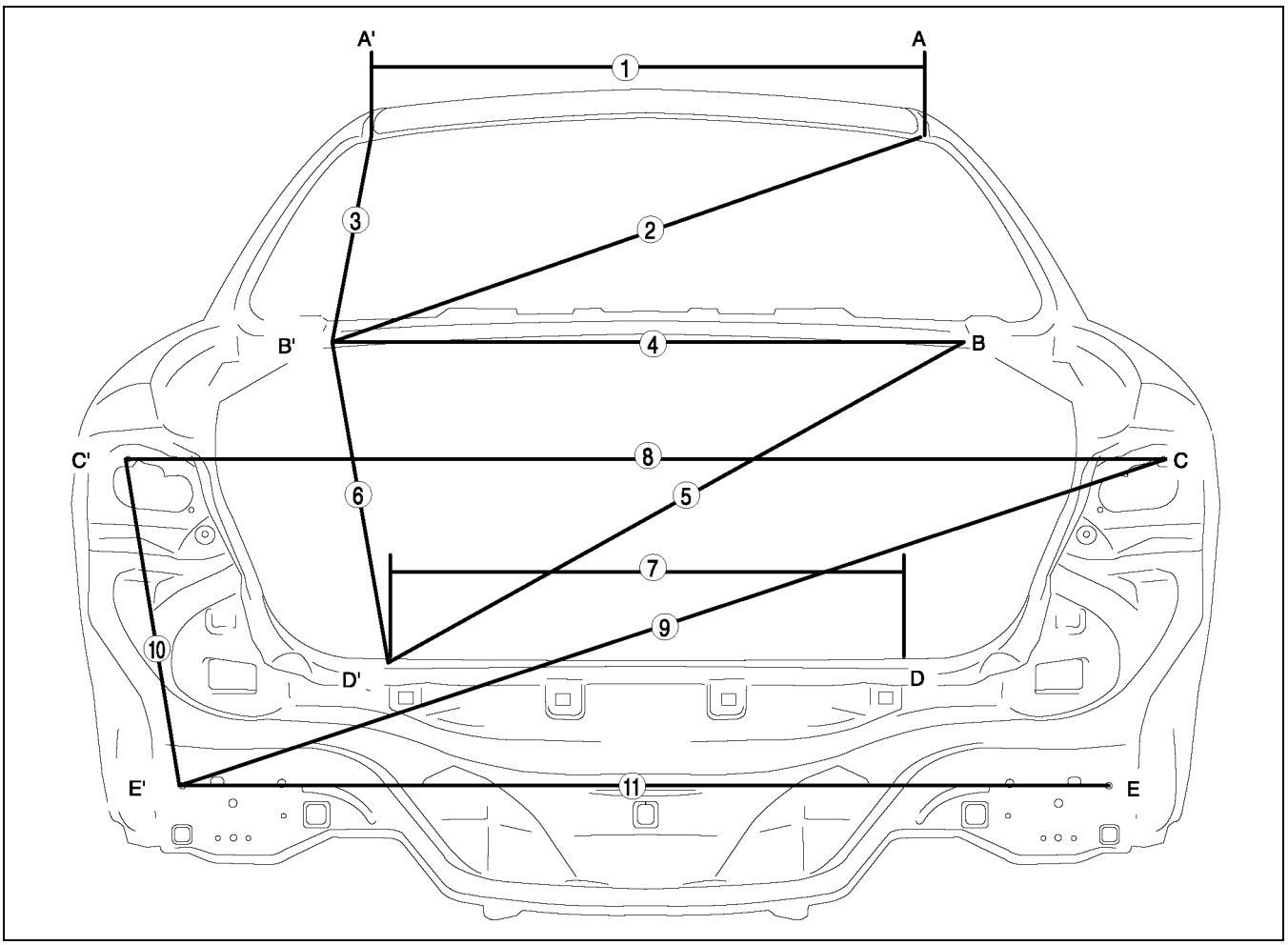

A6E9816B018

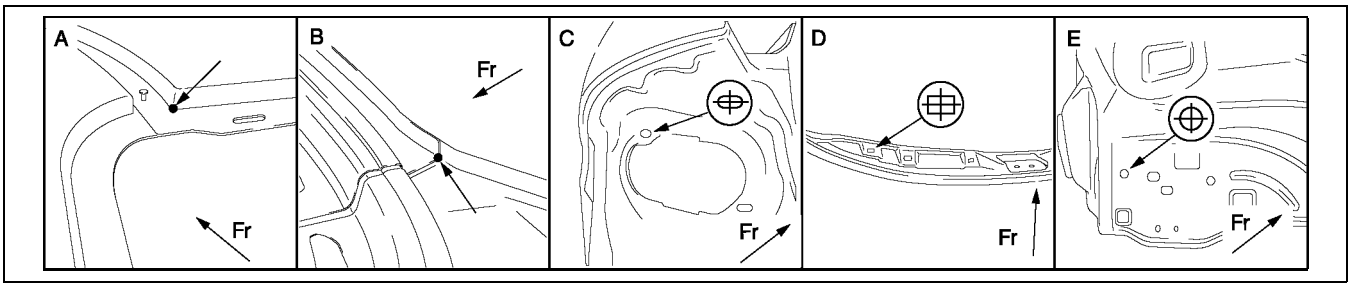

A6E9816B019

Measured location	Dimensions mm {in}
1	1,013 {39.88}
2	1,273 {50.12}
3	826 {32.52}
4	928 {36.54}
5	969 {38.15}
6	555 {21.85}

Measured location	Dimensions mm {in}
7	680 {26.77}
8	1,402 {55.20}
9	1,388 {54.65}
10	452 {17.80}
11	1,228 {48.35}

5HB

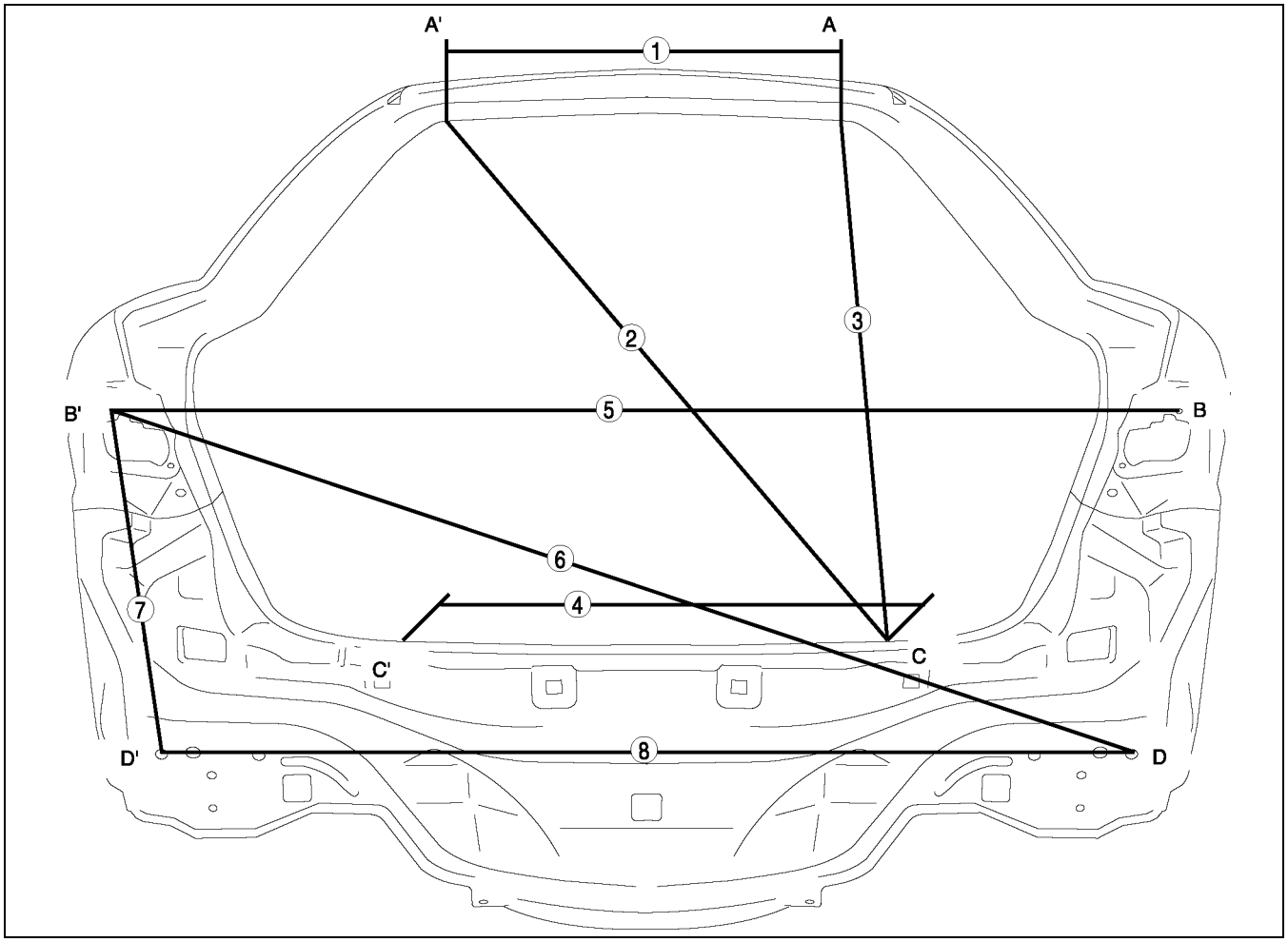

A6E9816B020

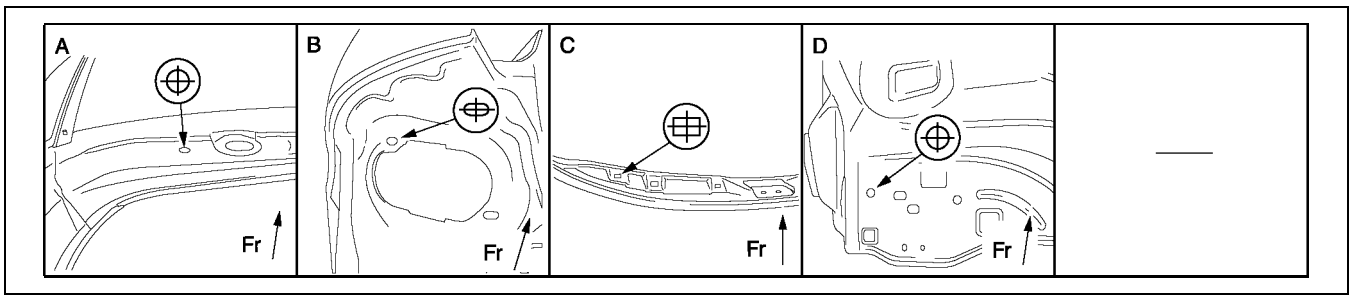

A6E9816B021

Measured location	Dimensions mm {in}
1	700 {27.56}
2	1,436 {56.54}
3	1,260 {49.61}
4	680 {26.77}

Measured location	Dimensions mm {in}
5	1,402 {55.20}
6	1,388 {54.65}
7	452 {17.80}
8	1,228 {48.35}

PLASTIC BODY PARTS

PLASTIC BODY PARTS VI-2
PLASTIC PARTS HEAT RESISTING TEMPERATURE VI-2
REPAIRABLE RANGE OF POLYPROPYLENE BUMPERS VI-3
POLYPROPYLENE BUMPER REPAIR VI-4
PROCEDURE VI-5

PLASTIC BODY PARTS

PLASTIC PARTS HEAT RESISTING TEMPERATURE

A6E981850000B01

Part Name		Code	Material Name	Heat resisting TemperatureC°{F°}
WINDSHIELD MOULDING		PVC	POLYVINYLCHLORIDE	95 {203}
COWL GRILLE		PP	POLYPROPYLENE	95 {203}
FRONT COMBINATION LIGHT	LENS	PC	POLYCARBONATE	130 {266}
	HOUSING	PBT	PBT	120 {248}
RADIATOR GRILLE	GRILLE	ABS	ABS	90 {194}
	REINFORCE-MENT	PP	POLYPROPYLENE	95 {203}
FRONT BUMPER		PP	POLYPROPYLENE	100 {212}
FRONT SIDE TURN LIGHT	LENS	PMMA	ACRYLIC	75 {167}
	HOUSING	PC-PBT	POLYPROPYLENE-PBT	120 {248}
OUTSIDE MIRROR	HOUSING	ABS	ABS	95 {200}
	BASE	PBT	PBT	200 {395}
	BLACK	AES	AES	75 {167}
	BODY COLOR	ABS	ABS	90 {194}
	MIRROR HOLDER	PP	POLYPROPYLENE	50 {122}
REAR COMBINATION LIGHT	LENS	PMMA	ACRYLIC	80 {167}
	HOUSING	AES	AES	70 {158}
REAR BUMPER		PP	POLYPROPYLENE	100 {212}
REAR FINISHER		ABS	ABS	90 {194}
HIGH-MOUNT BRAKE LIGHT(5HB)		PC	POLYCARBONATE	130 {266}
ROOF MOULDING		PVC	POLYVINYLCHLORIDE	95 {203}
BELTLINE MOLDING		PVC	POLYVINYLCHLORIDE	95 {203}
REAR SPOILER		ABS	ABS	90 {194}
SHROUD PANEL		PP	POLYPROPYLENE	100 {212}

Note

- The application of temperatures higher then heat resisting temperatures may result in part deformation.

REPAIRABLE RANGE OF POLYPROPYLENE BUMPERS

A6E981850010B01

The three types of damaged bumpers shown below are considered repairable. Although a bumper which has been damaged greater than this could also be repaired, it should be replaced with a new one because such repair would detract from the looks and quality of the bumper. In addition, such repair is not considered reasonable in terms of work time.

Repairable Bumpers

1. A bumper with a hole less than 50 mm {1.97 in} in diameter.

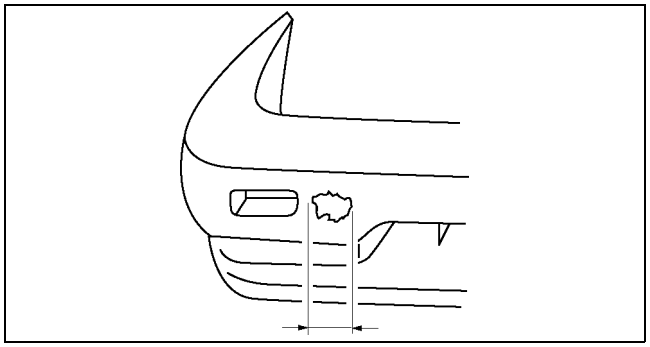

YMU980PCM

2. A bumper with a crack less than 100 mm {3.94 in} in length.

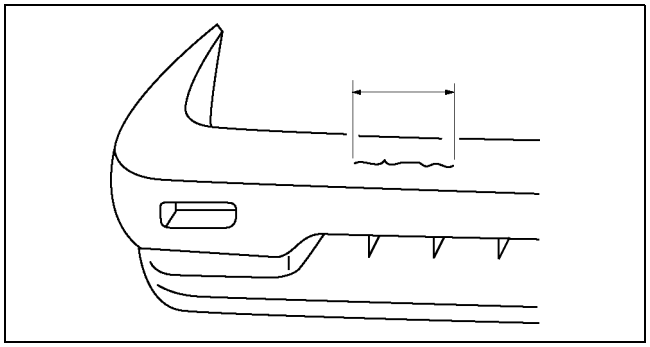

YMU980PCN

3. A bumper with a crack less than 100 mm {3.94 in} in length that is less than half of the width of the bumper.

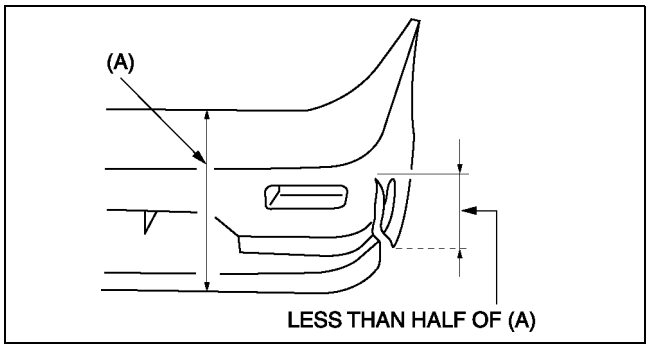

YMU980PCP

VI

POLYPROPYLENE BUMPER REPAIR

A6E981850010B02

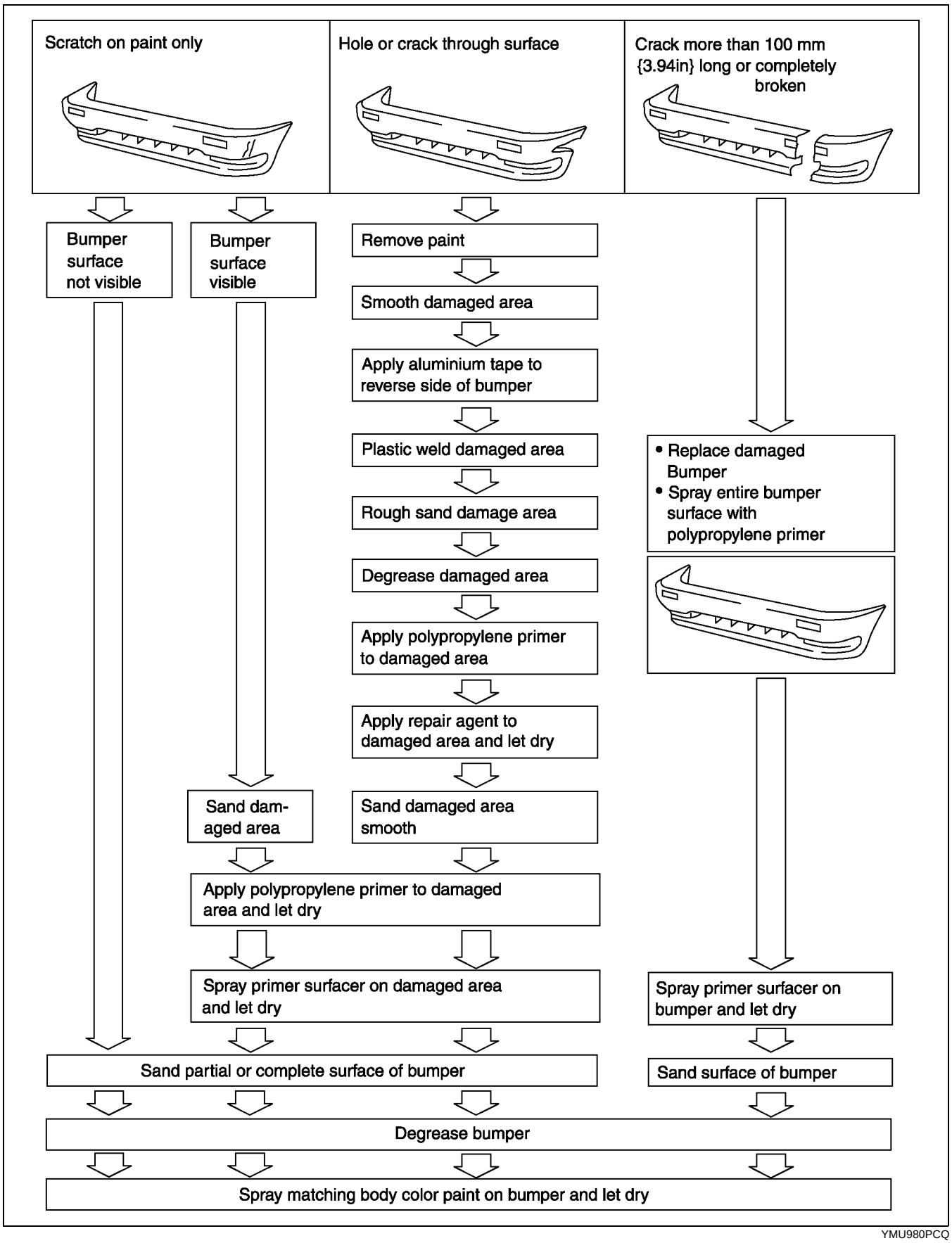

YMU980PCQ

PROCEDURE

A6E981850010B03

Repair of polypropylene bumpers having damage that has reached the surface of the polypropylene and are too serious to be restored by painting only.

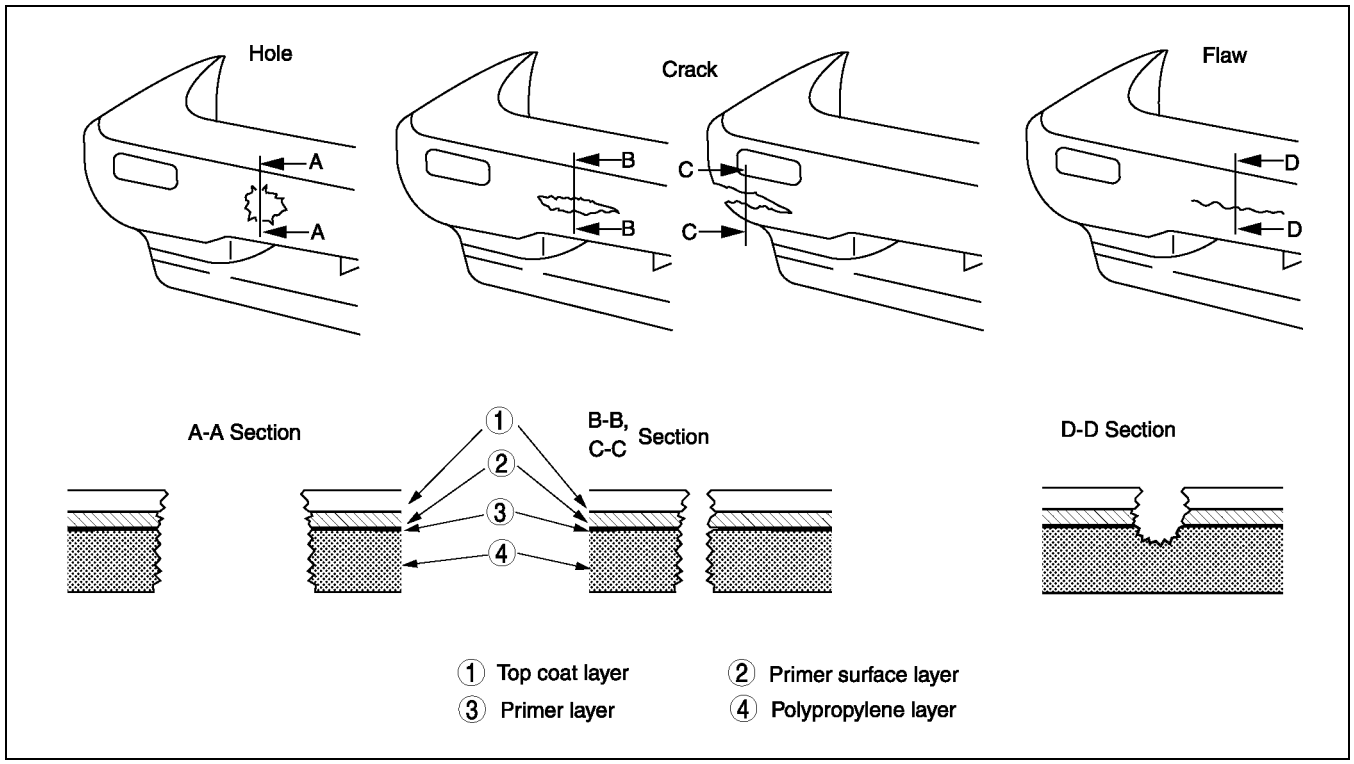

ZUA9818B001

1. Cut the rough edges around the damage with a knife to make it smooth. Sand the area with a sander to make an angle of about 45°.

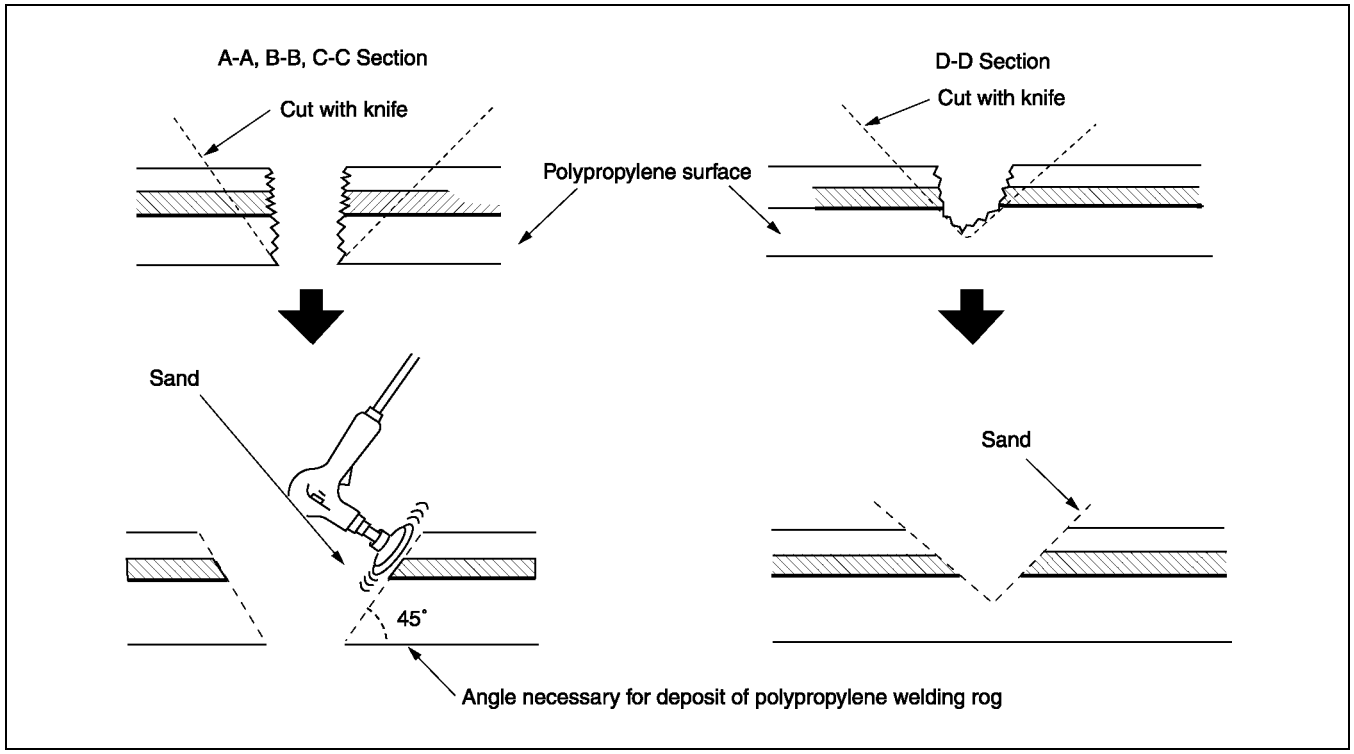

ZUA9818B002

2. Weld the damaged area.
   - For repair of a cracked area, melt the crack together with a heat gun and a melting attachment.

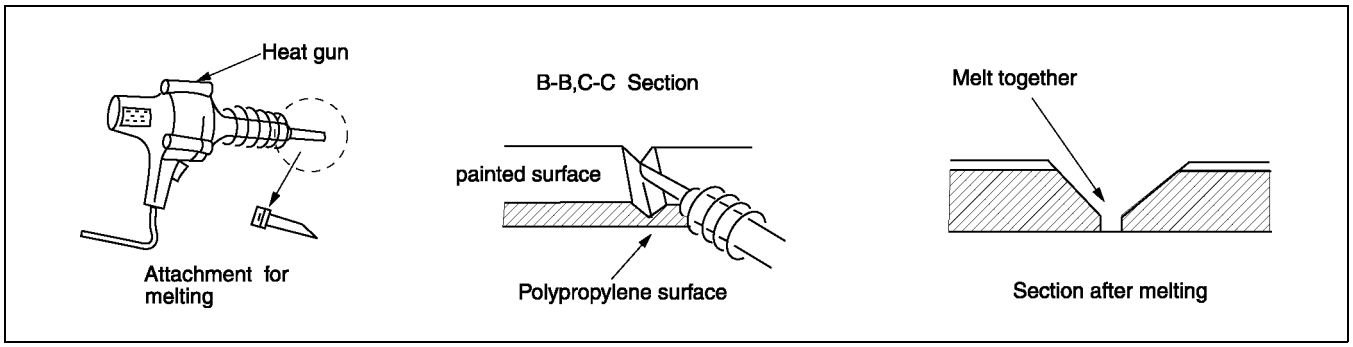

ZUA9818B003

   - For repair of a hole, degrease the area on both sides of the bumper and apply aluminium tape on the reverse side of the damage area.

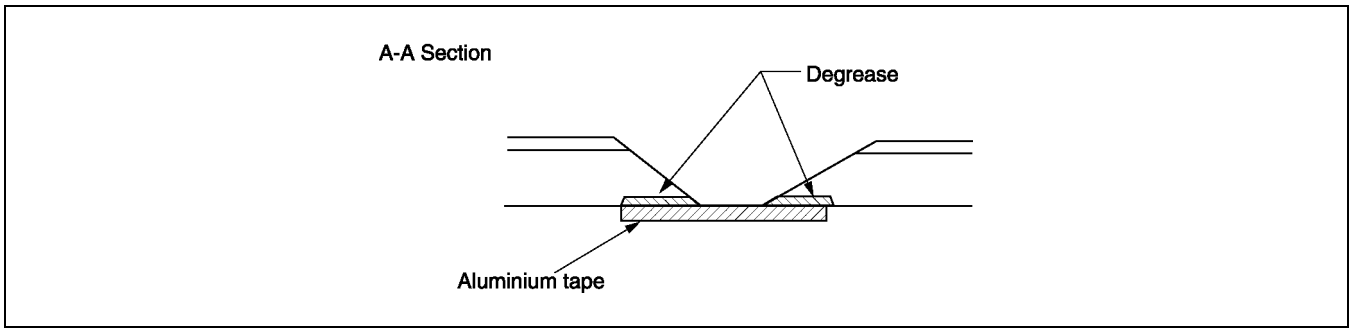

ZUA9818B005

3. Melt the polypropylene welding rod with a heat gun and deposit it the cracked area.

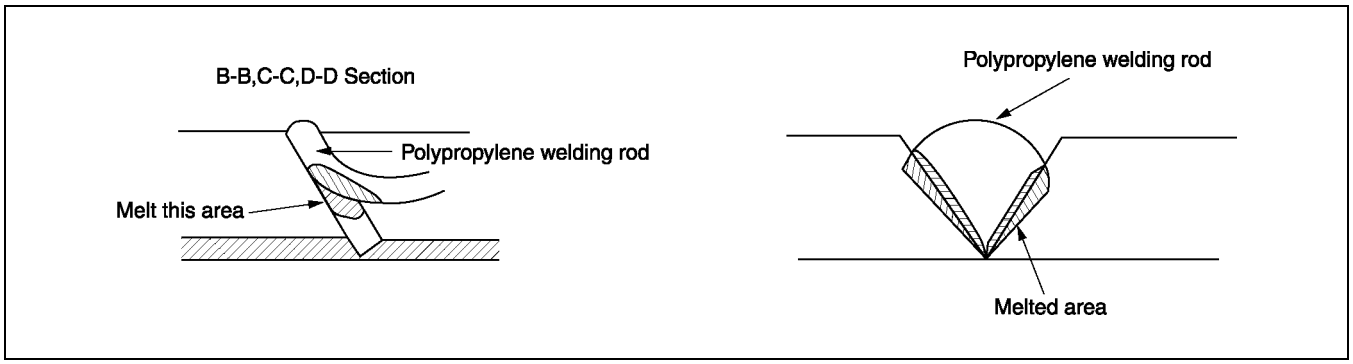

ZUA9818B004

Note
- Heat the shaded area to melt it.
- Take care not to overlay melt welding rod. If the part is welded with the welding rod melted like jelly, the welding strength will be reduced.
- Hold the heat gun 10—20 mm {0.39—0.79 in} from the part being welded.
- Do not move the welding rod until the welded parts cool.

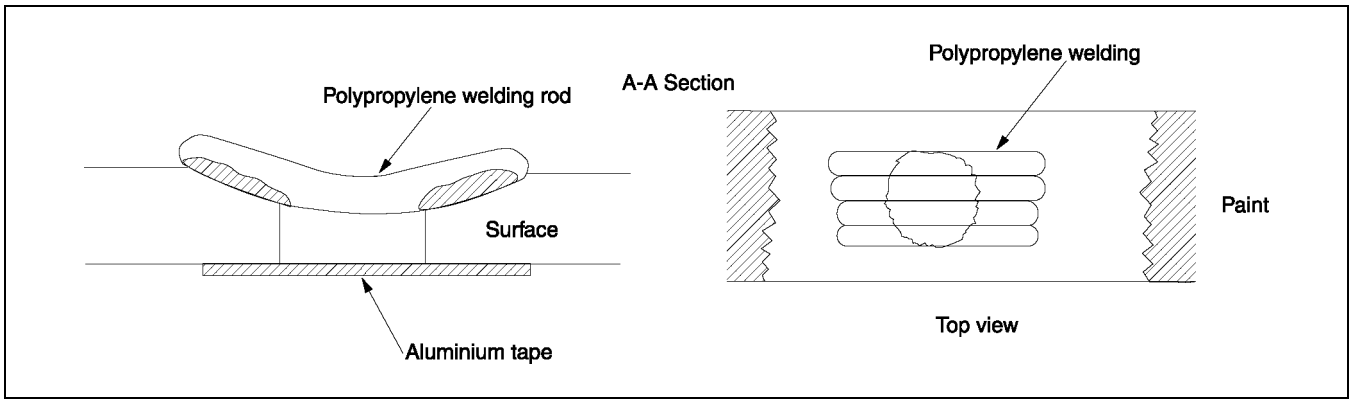

ZUA9818B006

4. Sand the surface of the polypropylene gradually as it is easily melted by the abrasion heat. Sand the area to which repair agent will be applied.

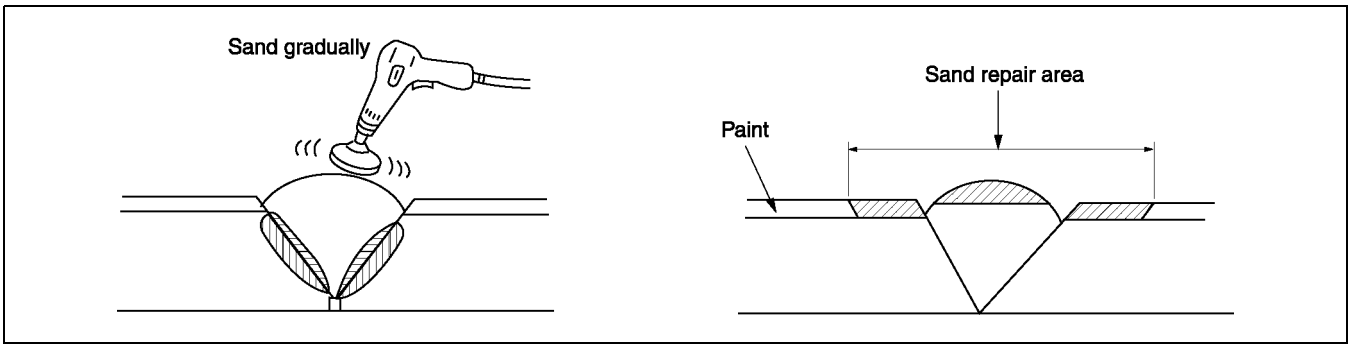

YMU980PCX

5. Uniformly apply polypropylene primer with a brush to an area larger than the repaired area. Allow to dry about 10 minutes at 20 °C {68 °F}.

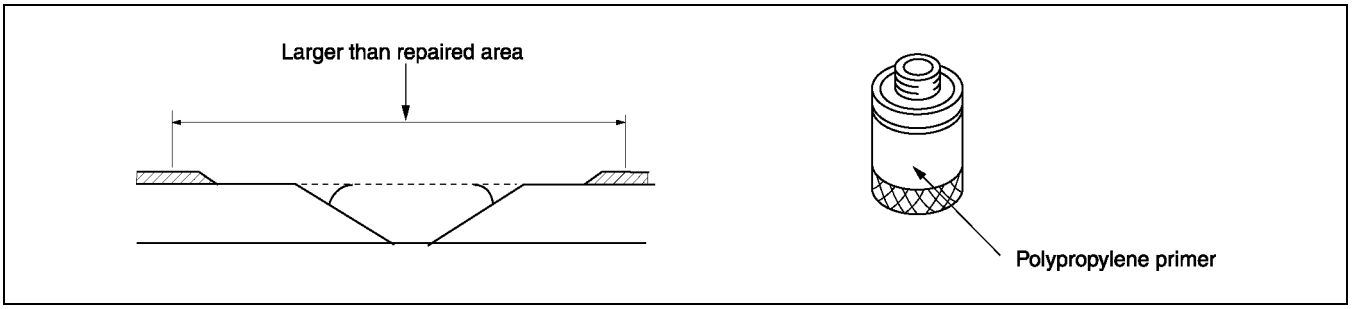

YMU980PCY

6. Mix the main agent and the stiffening agent in a ratio of one to one. Apply the mixed repair agent to the damaged area.

Note
- When mixing the main and stiffening agents, take care not to allow bubbles to form.
- The repair agent hardens quickly (about 5 minutes); proceed with the work immediately after mixing the agents.
- Allow about 30 minutes to dry (20 °C {68 °F}) before sanding.

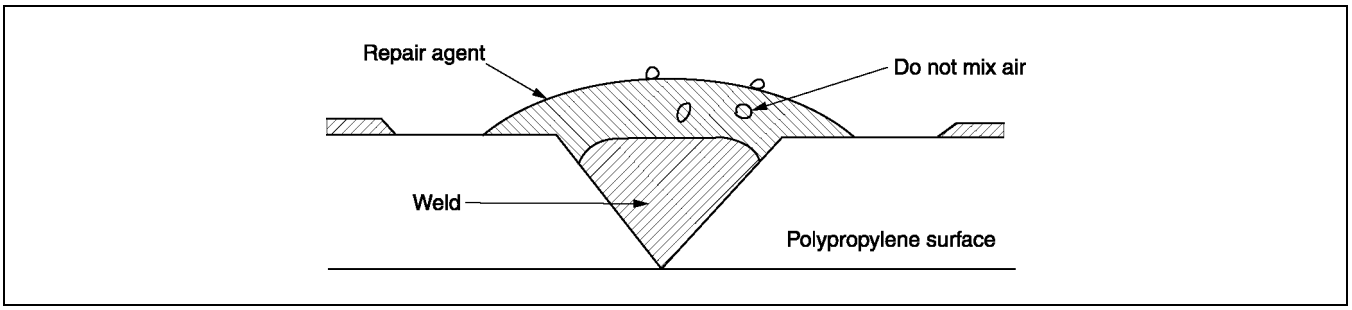

YMU980PCZ

The repair agent is a two part epoxy adhesive.
When the repair agent hardens, it will provide a good finish with the same flexibility as the polypropylens.
The repair agent for a **urethane** bumper is also a two part adhesive compound. However, this is different from that for a polypropylene bumper. If the incorrect repair agent is used, the repair will be faulty.

7. Sand the area with #180—240 sandpaper.

Note
- If excessive force is applied to the area when sanding, the surface will be damaged.
- If fuzz remains around the repaired area, melt it with a heat gun.

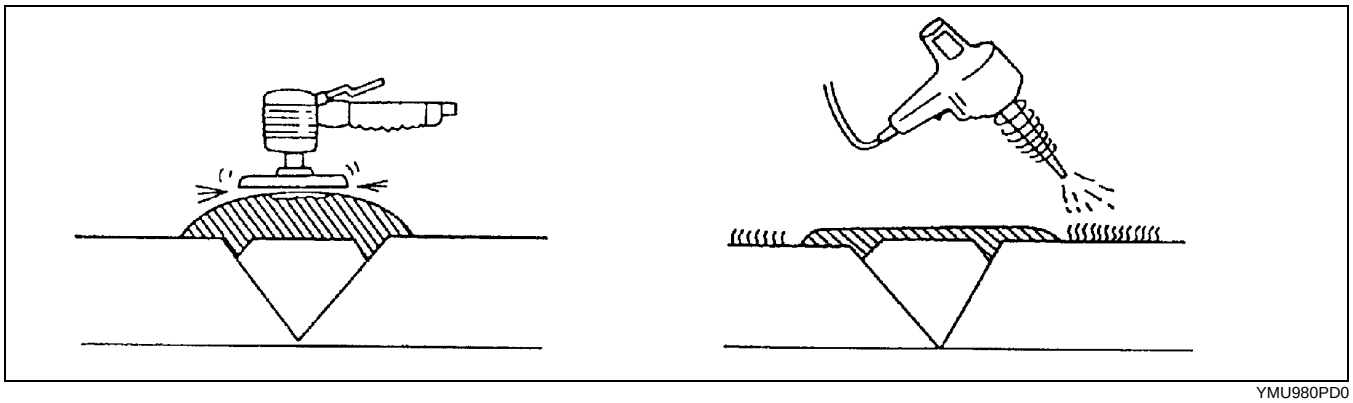

YMU980PD0

8. Degrease the painted surface.
9. Mix the primer and the hardener at a ratio of one to one. Apply the primer to the repaired area and the surface of the bumper with a brush or spray.

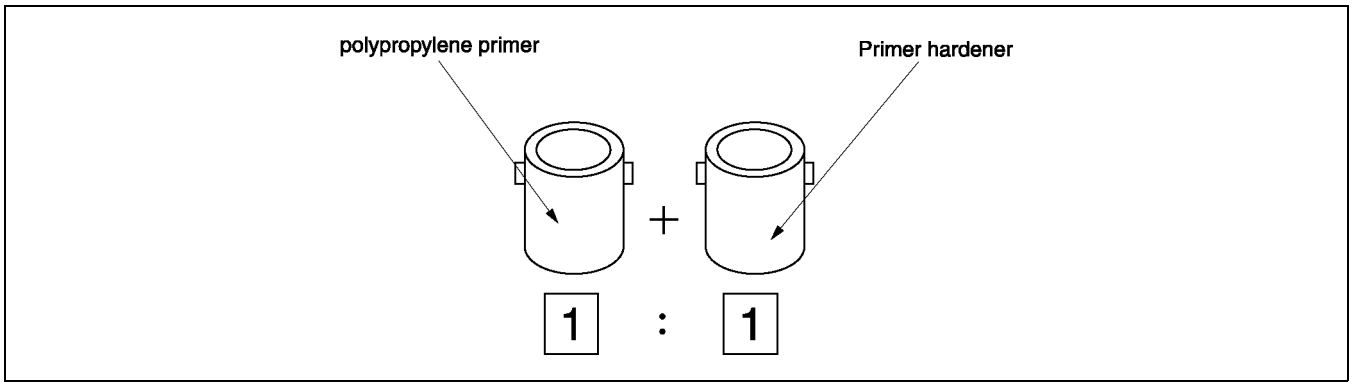

YMU980PD1

Use the primer within 16 hours after it is mixed.

Note
- Polypropylene primer will dissolve even after drying if it is wiped with solvent. Use only water to clean around the primer.

10. Allow the part to dry.

11. Add the softener to the urethane primer surfacer and spray it on the repaired area.
    a. Mixing method
       Urethane primer surfacer + Softener..... Mixture A
       Mixture A + hardener..... Mixture B
       Dilute mixture B with thinner to spray on bumper
    b. Viscosity
       14—16 seconds/viscosimeter 20 °C {68 °F}

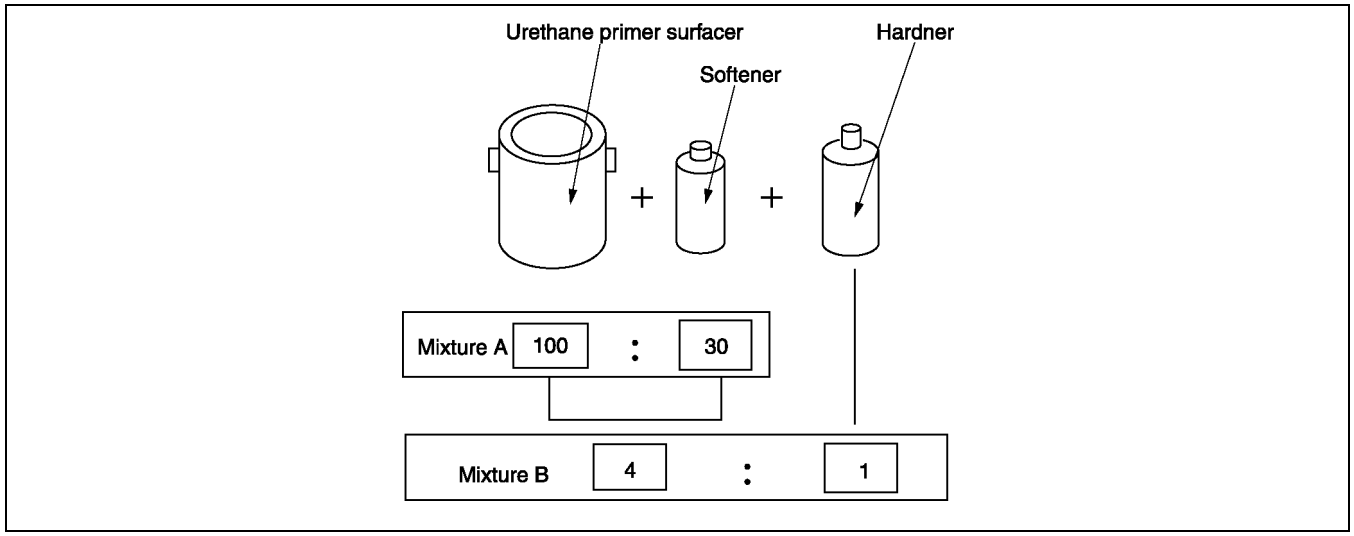

YMU980PD2

Note
- Mix the solutions at the specified ratio.

    c. Spray pressure
       300—400 kPa {3—4 kgf/cm^2, 43—57 psi}
    d. Standard film thickness
       30—40 μ
    e. Spray method
       Spot-spray primer surfacrer on bumper three of four times
12. Air drying 20 °C {68 °F} — 8 hours minimum.
    Forced drying 60 °C {140 °F} — 1 hour
13. Lightly sand the complete surface of the bumper with #400—#600 sandpaper. Do not expose the surface of the polypropylene. (Wet or dry sanding is acceptable.)
14. Wipe the complete surface of the bumper with degreasing agent. Quickly wipe the surface with a clean rag to degrease it.
15. Apply a matching coat of body color to the polypropylene bumper.

Note
- Be sure to use only urethane primer for a urethane bumper and polypropylene primer for a polypropylene bumper. Other paints for repairing a polypropylene bumper are the same as those for the urethane bumper.

16. Air drying 20 °C {68 °F} — 8 hours minimum.
    Forced drying 60 °C {140 °F} — 1 hour

Note
- Let the part air dry when possible as forced drying could cause bubbles in the top coat.

PRIMARY COLOR MIXTURE CHART FOR BODY COLORS

PRIMARY COLOR MIXTURE CHART FOR BODY COLORS VII-2
PRIMARY COLOR MIXTURE CHART FOR BODY COLORS VII-2

PRIMARY COLOR MIXTURE CHART FOR BODY COLORS

PRIMARY COLOR MIXTURE CHART FOR BODY COLORS

A6E982089000B01

- This is the primary color mixture chart for body colors.
- Please use the paint available in your country.
- A blank column indicates that there is no primary color available.

AKZO

COLOR CODE	COLOR NAME		KIND OF PAINT	POLYXITHANE/POLYURETHANE	
			LABEL	AUTOBASE	AUTOCRYL
			INGREDIENTS	CC/CC g{oz}	CC/CC g{oz}
A3E	CLASSIC RED CLE	956	VIOLET-RED TRANSPARENT		537.0 {18.94}
		559	RED OXIDE		544.2 {19.20}
		528	RED MAROON TRANSPARENT		621.4 {21.92}
		359	BRILLIANT RED	777.7 {27.43}	989.8 {34.91}
		00	WHITE	778.2 {27.45}	
		744	MIXING BLACK	781.9 {27.58}	
		538	BRIGHT MAROON TRANSPARENT	989.9 {34.92}	
A4D	ARCTIC WHITE CLE	00	WHITE	1,172.5 {41.36}	1,283.0 {45.26}
		558	LIGHT OXIDE YELLOW	1,173.9 {41.41}	
		744	MIXING BLACK	1,175.5 {41.46}	
		971	VIOLET TRANSPARENT		1,283.6 {45.28}
		904	DARK BLUE		1,284.5 {45.31}
		744	MIXING BLACK		1,286.3 {45.37}
		558	LIGHT OXIDE YELLOW		1,292.5 {45.59}
16W	BLACK MC	400	DEEP BLACK	454.3 {16.02]	
		334YA	YELLOW GOLD PALIOCROM	457.2 {16.13}	
		333DF	SILVER DOLLAR FINE	476.4 {16.80}	
		777	LIGHT GRAY TRANSPARENT	540.6 {19.07}	
		505	RED SEMI-TRANSPARENT	614.4 {21.67}	
		261	BRIGHT BLUE TRANSPARENT	958.5 {33.81}	
18J	GRACE GREEN MC	732	DARK GREEN TRANSPARENT	545.1 {19.23}	
		333M	MIXING METALLIC MEDIUM COARSE	550.9 {19.43}	
		777	LIGHT GRAY TRANSPARENT	565.6 {19.95}	
		575	BLUE TRANSPARENT	603.9 {21.30}	
		333PG	YELLOW(GOLD)PEARL-EFFECT MIXING COLOR	642.2 {22.65}	
		400	DEEP BLACK	755.6 {26.65}	
		333P	WHITE PEARL-EFFECT MIXING COLOR	870.9 {30.72}	
		952	DARK RED OXIDE TRANSPARENT	996.6 {35.15}	

PRIMARY COLOR MIXTURE CHART FOR BODY COLORS

COLOR CODE	COLOR NAME		KIND OF PAINT	POLYXITHANE/POLYURETHANE	
			LABEL	AUTOBASE	AUTOCRYL
		INGREDIENTS		CC/CC g{oz}	CC/CC g{oz}
24E	SPARKLING SILVER M	333DC	SILVER DOLLAR METALLIC COARSE	479.9 {16.93}	
		952	DARK RED OXIDE TRANSPARENT	493.8 {17.42}	
		777	LIGHT GRAY	526.2 {18.56}	
		977	DARK OXIDE YELLOW	560.9 {19.78}	
		666	CORRECTION BINDER	676.8 {23.87}	
		333EC	MIXING METALLIC EXTRA COARSE	978.2 {34.50}	
25B	BLUE PACIFIC MC	261	BRIGHT BLUE TRANSPARENT	496.5 {17.51}	
		777	LIGHT GRAY	506.2 {17.86}	
		400	DEEP BLACK	537.5 {18.96}	
		333CC	MIXING METALLIC VERY COARSE	581.9 {20.53}	
		341	BLUE GREEN	630.2 {22.23}	
		971	VIOLET TRANSPARENT	724.6 {25.56}	
		333PB	BLUE PEARL-EFFECT MIXING COLOR	966.1 {34.08}	
25C	CANARY YELLOW MC		FIRST COAT		
		297	LIGHT YELLOW	521.4 {18.39}	
		744	MIXING BLACK	525.2 {18.53}	
		360	RED OXIDE	542.4 {19.13}	
		361	RED YELLOW	607.0 {21.41}	
		00	WHITE	1,077.2 {38.00}	
			SECOND COAT		
		666	CORRECTION BINDER	746.4 {26.33}	
		332XS	XIRALLIC CRYSTAL SILVER	794.2 {28.01}	
		332XG	XIRALLIC SUNBEARN GOLD	861.2 {30.38}	
		777	LIGHT GRAY	956.9 {33.75}	
25D	SNOWFLAKE WHITE PEARL MC		FIRST COAT		
		00	WHITE	1,172.7 {41.37}	
		744	MIXING BLACK	1,174.2 {41.42}	
		558	LIGHT OXIDE YELLOW	1,175.6 {41.47}	
			SECOND COAT		
		332XS	XIRALLIC CRYSTAL SILVER	481.3 {16.98}	
		332XG	XIRALLIC SUNBEARN GOLD	529.4 {18.67}	
		777	LIGHT GRAY	649.7 {22.92}	
		666	CORRECTION BINDER	962.5 {33.95}	
25E	STRATO BLUE MC	332VA	VIOLET PEARL	390.6 {13.78}	
		777	LIGHT GRAY	401.1 {14.15}	
		956	VIOLET-RED TRANSPARENT	425.1 {14.99}	
		261	BRIGHT BLUE TRANSPARENT	507.7 {17.91}	
		333PB	BLUE PEARL-EFFECT MIXING COLOR	612.9 {21.62}	
		400	DEEP BLACK	736.1 {25.96}	
		341	BLUE GREEN	973.5 {34.34}	

PRIMARY COLOR MIXTURE CHART FOR BODY COLORS

COLOR CODE	COLOR NAME		KIND OF PAINT	POLYXITHANE/POLYURETHANE	
			LABEL	AUTOBASE	AUTOCRYL
			INGREDIENTS	CC/CC g{oz}	CC/CC g{oz}
25F	GARNET RED MC	334XR	XIRALLIC RADIANT RED	352.2 {12.42}	
		400	DEEP BLACK	378.8 {13.36}	
		538	BRIGHT MAROON TRANSPARENT	449.2 {15.84}	
		777	LIGHT GRAY	543.1 {19.16}	
		956	VIOLET-RED TRANSPARENT	746.6 {26.34}	
		262	RED TRANSPARENT	973.5 {34.34}	
25G	TITANIUM GRAY M	333DC	SILVER DOLLAR METALLIC COARSE	409.9 {14.46}	
		777	LIGHT GRAY	429.5 {15.15}	
		261	BRIGHT BLUE TRANSPARENT	472.3 {16.66}	
		744	MIXING BLACK	639.3 {22.55}	
		333PR	RED PEARL-EFFECT MIXING COLOR	982.3 {34.65}	
25H	SILVER CONTRAIL M	333DC	SILVER DOLLAR METALLIC COARSE	965.4 {34.05}	
		777	LIGHT GRAY	967.1 {34.11}	
		101	OPAL	971.4 {34.26}	
		400	DEEP BLACK	977.8 {34.49}	
		732	DARK GREEN TRANSPARENT	986.1 {34.78}	

PRIMARY COLOR MIXTURE CHART FOR BODY COLORS

E.I.du pont de nemours &Co.(Inc.)

COLOR CODE	COLOR NAME		KIND OF PAINT	POLYXITHANE/POLYURETHANE		
			LABEL	CRONAR	CRONAR	-
			INGREDIENTS	CENTARI 6000 g{oz}	CENTARI 600 g{oz}	CENTARI 500 g{oz}
A3E	CLASSIC RED CLE	AM 64	MAGENTA	240.4 {8.48}	184.1 {6.49}	
		AM 50	BRILLIANT RED	440.7 {15.54}	337.4 {11.90}	
		AM 66	RED VIOLET	460.7 {16.25}	352.8 {12.44}	
		AM 150	BINDER		935.6 {33.00}	
		XB 155	M.S. BINDER	950.4 {33.52}		
A4D	ARCTIC WHITE CLE	AM1	WHITE H.S.	663.9 {23.42}	622.3 {21.95}	
		AM7	BLACK L.S.	677.4 {23.89}	635.0 {22.40}	
		AM82	YELLOW OXIDE L.S.	679.3 {23.96}	636.8 {22.46}	
		AB 150	B/C BALANCER		1,167.0 {41.16}	
		XB 155	M.S. BINDER	1,187.8 {41.90}		
16W	BLACK MC	AM6	BLACK H.S.		174.4 {6.15}	
		4530S	FLOP CONTROL AGENT		252.9 {8.92}	
		AM14	COARSE ALUMINIUM		255.1 {9.00}	
		AM74	BLUE PEARL		263.6 {9.30}	
		AB150	B/C BALANCER		772.8 {27.26}	
		1B160	BINDER		925.6 {32.65}	
18J	GRACE GREEN MC	AM27	TRANSPARENT BLUE	94.9 {3.35}		
		AM32	GREEN	170.5 {6.01}		
		AM5	JET BLACK	235.6 {8.31}		
		4530S	FLOP CONTROL AGENT	287.4 {10.14}		
		AM75	SUPER GREEN PEARL	326.2 {11.51}		
		AM76	GOLD PEARL	341.8 {12.06}		
		XB155	M.S. BINDER	715.5 {25.24}		
		XB165	M.S. BINDER	950.2 {33.52}		
24E	SPARKLING SILVER M	AM95	BR COARSE ALUMINIUM	127.6 {4.50}	110.2 {3.89}	
		AM11	MEDIUM ALUMINIUM	185.8 {6.55}	160.4 {5.66}	
		AM90	TRANSOXIDE YELLOW	206.9 {7.30}	178.7 {6.30}	
		AM91	TRANSOXIDE RED	214.4 {7.56}	185.2 {6.53}	
		AM2	WHITE L.S.	219.3 {7.74}	189.4 {6.68}	
		AM5	JET BLACK	221.8 {7.82}	191.5 {6.75}	
		AB150	B/C BALANCER		546.6 {19.28}	
		AB160	BINDER		945.5 {33.35}	
		XB155	M.S. BINDER	436.5 {15.40}		
		XB165	M.S. BINDER	958.0 {33.79}		
25B	BLUE PACIFIC MC	AM27	TRANSPARENT BLUE	239.0 {8.43}	194.6 {6.86}	
		AM74	BLUE PEARL	347.8 {12.27}	283.2 {9.99}	
		AM62	TRANSPARENT RED	422.6 {14.91}	344.1 {12.14}	
		4530S	FLOP CONTROL AGENT	466.0 {16.44}	379.4 {13.38}	
		AM29	LIGHT BLUE	484.7 {17.10}	394.6 {13.92}	
		AM5	JET BLACK	500.6 {17.66}	407.6 {14.38}	
		AM17	BRIGHT-FINE ALUMINIUM	503.1 {17.75}	409.5 {14.44}	
		AB 150	B/C BALANCER		941.3 {33.20}	
		XB 155	M.S. BINDER	952.3 {33.59}		
25C	CANARY YELLOW MC	Please contact with your distributor or Du Pont office for the formula. Du pont is ready to provide the specialized color of CANARY YELLOW MC as a ready-to-use product.				

PRIMARY COLOR MIXTURE CHART FOR BODY COLORS

COLOR CODE	COLOR NAME		KIND OF PAINT	POLYXITHANE/POLYURETHANE		
			LABEL	CRONAR	CRONAR	-
			INGREDIENTS	CENTARI 6000 g{oz}	CENTARI 600 g{oz}	CENTARI 500 g{oz}
25D	SNOWFLAKE@ WHITE PEARL MC COLOR BASE	AM1	WHITE H.S.		655.7 {23.13}	
		AB150	B/C BALANCER		1,186.9 {41.87}	
	SNOWFLAKE WHITE PEARL MC PEARL BASE	M8819	SILVER CRYSTAL(FAC PAC)		844.7 {29.80}	
		4530S	FLOP CONTROL AGENT		930.9 {32.84}	
		AM2	WHITE L.S.		936.9 {33.05}	
		AM7	BLACK L.S.		937.9 {33.08}	
		AM70	FAST BLUE L.S.		938.3 {33.10}	
25E	STRATO BLUE MC	AM27	TRANSPARENT BLUE	144.2 {5.09}	116.5 {4.11}	
		AM79	VIOLET PEARL	243.1 {8.57}	196.5 {6.93}	
		AM74	BLUE PEARL	314.2 {11.08}	253.9 {8.96}	
		AM5	JET BLACK	376.3 {13.27}	304.1 {10.73}	
		AM20	VIOLET	432.9 {15.27}	349.8 {12.34}	
		AM66	RED VIOLET	485.1 {17.11}	392.0 {13.83}	
		AB 150	B/C BALANCER		948.9 {33.47}	
		XB 155	M.S. BINDER	962.3 {33.94}		
25F	GARNET RED MC	AM64	MAGENTA	228.7 {8.07}	186.5 {6.58}	
		AM85	TRANS MAROON	331.6 {11.70}	270.4 {9.54}	
		4530S	FLOP CONTROL AGENT	397.2 {14.01}	323.9 {11.43}	
		AM76	GOLD PEARL	422.4 {14.90}	344.4 {12.15}	
		AM94	EXTRA COARSE ALUMINUM	434.7 {15.33}	354.5 {12.50}	
		AM5	JET BLACK	443.9 {15.66}	362.0 {12.77}	
		AM2	WHITE L.S.	452.2 {15.95}	368.7 {13.01}	
		AB 150	B/C BALANCER		939.1 {33.13}	
		XB 155	M.S. BINDER	949.9 {33.51}		
25G	TITANIUM GRAY M	AM95	BR COARSE ALUMINIUM	89.6 {3.16}	83.6 {2.95}	
		AM5	JET BLACK	140.6 {4.96}	131.1 {4.62}	
		AM28	FAST BLUE H.S.	157.4 {5.55}	146.8 {5.18}	
		AM20	VIOLET	171.5 {6.05}	159.9 {5.64}	
		AM84	RED OXIDE L.S.	184.9 {6.52}	172.5 {6.08}	
		AM2	WHITE L.S.	197.2 {6.96}	183.9 {6.49}	
		AB 150	B/C BALANCER		597.3 {21.07}	
		AB 160	BINDER		933.8 {32.94}	
		XB 155	M.S. BINDER	424.6 {14.98}		
		XB 165	M.S. BINDER	943.5 {33.28}		
25H	SILVER CONTRAIL M	AM95	BR COARSE ALUMINIUM	155.2 {5.47}	131.8 {4.65}	
		4530S	FLOP CONTROL AGENT	172.4 {6.08}	146.5 {5.17}	
		AM31	FIRST GREEN L.S.	189.0 {6.67}	160.6 {5.66}	
		AM70	FAST BLUE L.S.	203.3 {7.17}	172.7 {6.09}	
		AM2	WHITE L.S.	211.7 {7.47}	179.8 {6.34}	
		AM5	JET BLACK	215.3 {7.59}	182.9 {6.45}	
		AB 150	B/C BALANCER		571.2 {20.15}	
		AB 160	BINDER		938.1 {33.09}	
		XB 155	M.S. BINDER	449.8 {15.87}		
		XB 165	M.S. BINDER	950.1 {33.51}		

PRIMARY COLOR MIXTURE CHART FOR BODY COLORS

STANDOX

COLOR CODE	COLOR NAME	KIND OF PAINT / LABEL / MIXING No.	POLYURETHANE STANDOX CC/CC g{oz}
A3E	CLASSIC RED CLE	861	526.0 {18.55}
		566	714.9 {25.22}
		576	899.9 {31.74}
		564	939.4 {33.14}
A4D	ARCTIC WHITE CLE	870	1,120.9 {39.54}
		564	1,140.3 {40.22}
		574	1,141.9 {40.28}
16W	BLACK MC	571	716.5 {25.27}
		803	789.6 {27.85}
		008	856.2 {30.20}
		811	897.0 {31.64}
		859	918.2 {32.39}
		823	921.9 {32.52}
		570	925.6 {32.65}
18J	GRACE GREEN MC	571	262.6 {9.26}
		573	690.2 {24.35}
		823	764.3 {26.96}
		824	844.9 {29.80}
		008	868.4 {30.63}
		588	924.7 {32.62}
		802	937.9 {33.08}
24E	SPARKLING SILVER M	590	302.2 {10.66}
		811	836.2 {29.50}
		008	870.9 {30.72}
		581	924.6 {32.61}
		582	937.9 {33.08}
		571	941.7 {33.22}
25B	BLUE PACIFIC MC	859	673.3 {23.75}
		853	808.0 {28.50}
		825	905.7 {31.95}
		812	922.5 {32.54}
		563	936.0 {33.02}
25C	CANARY YELLOW MC	801	563.2 {19.87}
		008	695.7 {24.54}
		574	795.1 {28.05}
		570	894.4 {31.55}
		580	983.9 {34.71}
		575	990.5 {34.94}
	GROUND	870	1,131.2 {39.90}
		571	1,140.6 {40.23}
		563	1,143.8 {40.35}
25D	SNOWFLAKE WHITE PEARL MC	599	748.5 {26.40}
		801	873.2 {30.80}
		802	898.2 {31.68}
		008	939.8 {33.15}
		570	943.9 {33.29}
	GROUND	570	1,032.5 {36.42}
		564	1,053.6 {37.16}
		581	1,054.7 {37.20}

PRIMARY COLOR MIXTURE CHART FOR BODY COLORS

COLOR CODE	COLOR NAME	KIND OF PAINT / LABEL / MIXING No.	POLYURETHANE / STANDOX / CC/CC g{oz}
25E	STRATO BLUE MC	853	271.8 {9.59}
		825	482.7 {17.03}
		571	685.3 {24.17}
		821	795.0 {28.04}
		859	872.6 {30.78}
		569	945.2 {33.34}
25F	GARNET RED MC	833	332.3 {11.72}
		566	664.6 {23.44}
		805	767.6 {27.08}
		828	847.4 {29.89}
		576	913.8 {32.23}
		571	950.4 {33.52}
25G	TITANIUM GRAY M	811	477.5 {16.84}
		593	716.3 {25.27}
		571	823.7 {29.05}
		585	888.2 {31.33}
		569	912.1 {32.17}
		008	924.0 {32.59}
		567	933.6 {32.93}
25H	SILVER CONTRAIL M	593	505.1 {17.82}
		811	926.0 {32.66}
		589	932.3 {32.89}
		571	934.4 {32.96}

SPIES HACKER

COLOR CODE	COLOR NAME	KIND OF PAINT	POLYURETHANE
		LABEL	PERMACRON
		INGREDIENTS	g{oz}
A3E	CLASSIC RED CLE	MB 544	528.2 {18.63}
		MB 536	717.7 {25.32}
		MB 529	903.5 {31.87}
		MB 525	943.2 {33.27}
A4D	ARCTIC WHITE	MB 511	1,123.1 {39.62}
		MB 525	1,142.6 {40.30}
		MB 505	1,144.2 {40.36}
16W	BLACK MC	MB 502	713.7 {25.17}
		MB 799	780.1 {27.52}
		MB 558	814.8 {28.74}
		MB 593	853.0 {30.09}
		MB 554	874.2 {30.84}
		MB 501	918.5 {32.40}
		MB 561	922.2 {32.53}
18J	GRACE GREEN MC	MB 522	429.4 {15.15}
		MB 502	693.0 {24.44}
		MB 572	774.0 {27.30}
		MB 561	848.3 {29.92}
		MB 553	904.8 {31.92}
		MB 799	928.3 {32.74}
		MB 592	941.5 {33.21}
24E	SPARKLING SILVER M	MB 558	532.9 {18.80}
		MB 514	834.5 {29.44}
		MB 532	888.1 {31.33}
		MB 799	922.8 {32.55}
		MB 531	936.0 {33.02}
		MB 502	939.8 {33.15}
25B	BLUE PACIFIC MC	MB 554	672.0 {23.70}
		MB 546	806.4 {28.44}
		MB 563	903.9 {31.88}
		MB 557	920.7 {32.48}
		MB 527	934.1 {32.95}
25C	CANARY YELLOW MC	MB 591	562.1 {19.83}
		MB 799	694.3 {24.49}
		MB 505	793.5 {27.99}
		MB 501	892.6 {31.49}
		MB 523	981.9 {34.63}
		MB 528	988.5 {34.87}
	GROUND	MB 511	1,133.5 {39.98}
		MB 502	1,142.9 {40.31}
		MB 527	1,146.1 {40.43}
25D	SNOWFLAKE WHITE PEARL MC	MB 299	747.0 {26.35}
		MB 591	871.5 {30.74}
		MB 799	913.0 {32.20}
		MB 592	937.9 {33.08}
		MB 501	942.0 {33.23}
	GROUND	MB 501	1,036.7 {36.57}
		MB 525	1,057.8 {37.31}
		MB 532	1,058.9 {37.35}

PRIMARY COLOR MIXTURE CHART FOR BODY COLORS

COLOR CODE	COLOR NAME	KIND OF PAINT	POLYURETHANE
		LABEL	PERMACRON
		INGREDIENTS	g{oz}
25E	STRATO BLUE MC	MB 546	272.3 {9.60}
		MB 563	483.7 {17.06}
		MB 502	686.7 {24.22}
		MB 568	796.6 {28.10}
		MB 554	874.3 {30.84}
		MB 520	947.1 {33.41}
25F	GARNET RED MC	MB 582	331.6 {11.70}
		MB 536	663.3 {23.40}
		MB 595	766.1 {27.02}
		MB 564	845.7 {29.83}
		MB 529	912.0 {32.17}
		MB 502	948.5 {33.46}
25G	TITANIUM GRAY M	MB 558	487.5 {17.20}
		MB 513	717.7 {25.32}
		MB 502	825.3 {29.11}
		MB 552	890.0 {31.39}
		MB 520	913.9 {32.24}
		MB 799	925.8 {32.66}
		MB 506	935.5 {33.00}
25H	SILVER CONTRAIL M	MB 513	504.1 {17.78}
		MB 558	924.1 {32.60}
		MB 538	930.4 {32.82}
		MB 502	932.5 {32.89}

PRIMARY COLOR MIXTURE CHART FOR BODY COLORS

Nexa Autocolor

COLOR CODE	COLOR NAME		KIND OF PAINT	POLYURETHANE	
			LABEL	AUTOCOLOR	
			INGREDIENTS	1L g{oz}	5L g{oz}
A3E	CLASSIC RED CLE		P425-941	461.9 {16.29}	2,309.5 {81.46}
			P429-976	558.5 {19.70}	2,792.5 {98.50}
			P425-900	562.6 {19.84}	2,813.0 {99.22}
			P425-921	678.6 {23.94}	3,393.0 {119.68}
			P192-474	1,017.4 {35.89}	5,087.0 {179.44}
A4D	ARCTIC WHITE CLE		P425-900	772.0 {27.23}	3,860.0 {136.16}
			P420-918RT	776.8 {27.40}	3,884.0 {137.00}
			P420-960RT	778.0 {27.44}	3,890.0 {137.21}
			P420-904RT	795.9 {28.07}	3,979.5 {140.37}
			P192-475	1,193.3 {42.09}	5,966.5 {210.46}
16W	BLACK MC		P425-0948	356.1 {12.56}	1,780.5 {62.80}
			P420-0902RT	388.6 {13.71}	1,943.0 {68.54}
			P425-0988	410.6 {14.48}	2,053.0 {72.42}
			P420-0920	424.0 {14.96}	2,120.0 {74.78}
			P425-0922	456.5 {16.10}	2,282.5 {80.51}
			P426-PP07	524.5 {18.50}	2,622.5 {92.50}
			P192-0500	957.2 {33.76}	4,786.0 {168.82}
18J	GRACE GREEN MC		P426-PP65	138.7 {4.89}	693.5 {24.46}
			P425-0948	263.7 {9.30}	1,318.5 {46.51}
			P420-0938	314.5 {11.09}	1,572.5 {55.47}
			P426-PP60	338.9 {11.95}	1,694.5 {59.77}
			P420-902RT	356.5 {12.57}	1,782.5 {62.87}
			P420-0982	398.5 {14.06}	1,992.5 {70.28}
			P425-0922	464.9 {16.40}	2,324.5 {81.99}
			P425-0954	594.8 {20.98}	2,974.0 {104.90}
			P192-0500	976.7 {34.45}	4,883.5 {172.26}
24E	SPAKING SILVER M		P425-984	396.5 {13.99}	1,982.5 {69.93}
			P420-938	419.0 {14.78}	2,095.0 {73.90}
			P420-942	429.7 {15.16}	2,148.5 {75.78}
			P420-982	451.2 {15.92}	2,256.0 {79.58}
			P425-989	634.8 {22.39}	3,174.0 {111.96}
			P192-528	976.7 {34.45}	4,883.5 {172.26}
25B	BLUE PACIFIC MC		P426-PP07	258.2 {9.11}	1,291.0 {45.54}
			P425-922	345.3 {12.18}	1,726.5 {60.90}
			P420-920	423.6 {14.94}	2,118.0 {74.71}
			P420-938	448.1 {15.81}	2,240.5 {79.03}
			P425-948	487.2 {17.19}	2,436.0 {85.93}
			P425-957	572.3 {20.19}	2,861.5 {100.93}
			P426-PP63	729.8 {25.74}	3,649.0 {128.71}
			P192-500	978.2 {34.50}	4,891.0 {172.52}
25C	CANARY YELLOW MC	GROUND COAT	P420-905	299.1 {10.55}	1,495.5 {52.75}
			P425-900	419.2 {14.79}	2,096.0 {73.93}
			P420-926	430.1 {15.17}	2,150.5 {75.86}
			P429-937	728.1 {25.68}	3,640.5 {128.41}
			P192-475	1,091.6 {38.50}	5,458.0 {192.52}
		BASE COAT	P426-PP05	14.2 {0.50}	71.0 {2.50}
			P426-PP09	18.9 {0.67}	94.5 {3.33}
			P192-500	530.0 {18.69}	2,650.0 {93.47}
			P190-376	948.1 {33.44}	4,740.5 {167.21}

PRIMARY COLOR MIXTURE CHART FOR BODY COLORS

COLOR CODE	COLOR NAME		KIND OF PAINT	POLYURETHANE	
			LABEL	AUTOCOLOR	
			INGREDIENTS	1L g{oz}	5L g{oz}
25D	SNOW-FLAKE WHITE PEARL MC	GROUND COAT	P425-900	786.5 {27.74}	3,932.5 {138.71}
			P420-910RT	787.7 {27.78}	3,938.5 {138.92}
			P420-904RT	798.5 {28.17}	3,992.5 {140.83}
			P192-475	1,197.1 {42.23}	5,985.5 {211.13}
		TOP COAT	P426-PP05	62.8 {2.22}	314.0 {11.08}
			P426-PP09	74.2 {2.62}	371.0 {13.09}
			P192-500	556.3 {19.62}	2,781.5 {98.11}
			P190-376	950.9 {33.54}	4,754.5 {167.71}
25E	STRATO BLUE MC		P420-930	202.4 {7.14}	1,012.0 {35.70}
			P420-920	271.8 {9.59}	1,359.0 {47.94}
			P425-922	333.5 {11.76}	1,667.5 {58.82}
			P425-948	383.6 {13.53}	1,918.0 {67.65}
			P426-PP64	453.0 {15.98}	2,265.0 {79.89}
			P426-PP07	582.1 {20.53}	2,910.5 {102.66}
			P192-500	963.7 {33.99}	4,818.5 {169.96}
25F	GARNET RED MC		P429-923	360.2 {12.71}	1,801.0 {63.53}
			P426-HE01	453.2 {15.99}	2,266.0 {79.93}
			P420-938	534.3 {18.85}	2,671.5 {94.23}
			P426-PP09	553.1 {19.51}	2,765.5 {97.55}
			P425-984	562.0 {19.82}	2,810.0 {99.12}
			P429-976	608.5 {21.46}	3,042.5 {107.32}
			P420-933	700.5 {24.71}	3,502.5 {123.54}
			P426-PP08	920.2 {32.46}	4,601.0 {162.29}
			P192-500	989.5 {34.90}	4,947.5 {174.51}
25G	TITANIUM GRAY M		P425-989	323.3 {11.40}	1,616.5 {57.02}
			P425-950	381.9 {13.47}	1,909.5 {67.35}
			P420-938	402.4 {14.19}	2,012.0 {70.97}
			P429-976	413.1 {14.57}	2,065.5 {72.86}
			P420-907	419.9 {14.81}	2,099.5 {74.06}
			P425-922	434.6 {15.33}	2,173.0 {76.65}
			P420-930	457.1 {16.12}	2,285.5 {80.62}
			P425-992	634.9 {22.40}	3,174.5 {111.98}
			P192-528	976.8 {34.46}	4,884.0 {172.28}
25H	SILVER CONTRAIL M		P425-992	477.0 {16.83}	2,385.0 {84.13}
			P425-989	526.8 {18.58}	2,634.0 {92.91}
			P420-960RT	535.6 {18.89}	2,678.0 {94.46}
			P425-957	539.5 {19.03}	2,697.5 {95.15}
			P425-948	545.4 {19.24}	2,727.0 {96.19}
			P420-938	565.9 {19.96}	2,829.5 {99.81}
			P420-918RT	634.2 {22.37}	3,171.0 {111.85}
			P192-528	975.6 {34.41}	4,878.0 {172.06}

PRIMARY COLOR MIXTURE CHART FOR BODY COLORS

PPG INDUSTRIES

COLOR CODE	COLOR NAME	KIND OF PAINT	POLYURETHANE	
		LABEL	DELTRON	
		INGREDIENTS	1L g{oz}	NOTE
A3E	CLASSIC RED CLE	752	670.0 {23.63}	
		746	875.0 {30.86}	
		791	953.0 {33.62}	
		756	957.9 {33.79}	
A4D	ARCTIC WHITE CLE	753	1,237.9 {43.66}	
		745	1,239.0 {43.70}	
		742	1,239.4 {43.71}	
		740	1,239.6 {43.72}	
16W	BLACK MC	740	672.0 {23.70}	
		763	864.0 {30.48}	
		952	901.1 {31.78}	
		953	936.1 {33.02}	
		752	950.1 {33.51}	
		753	952.9 {33.61}	
18J	GRACE GREEM MC	957	336.0 {11.85}	
		797	599.0 {21.13}	
		740	799.0 {28.18}	
		754	948.0 {33.44}	
		759	959.2 {33.83}	
		753	962.0 {33.93}	
24E	SPARKLING SILVER M	952	917.0 {32.35}	
		743	947.6 {33.43}	
		745	958.3 {33.80}	
		779	960.9 {33.89}	
		740	961.9 {33.93}	
25B	BLUE PACIFIC MC	776	534.0 {18.84}	
		763	813.0 {28.68}	
		755	890.0 {31.39}	
		958	919.6 {32.44}	
		770	943.3 {33.27}	
		740	964.1 {34.01}	
25C	CANARY YELLOW MC COLOR BASE	744	524.0 {18.48}	
		753	870.0 {30.69}	
		794	1,080.0 {38.10}	
		756	1,084.2 {38.24}	
		792	1,087.3 {38.35}	
	CANARY YELLOW MC PEARL BASE	941	781.0 {27.55}	
		956	876.0 {30.90}	
		960	932.0 {32.87}	
25D	SNOWFLAKE WHITE PEARL MC COLOR BASE	753	1,240.0 {43.74}	
	SNOWFLAKE WHITE PEARL MC PEARL BASE	751	602.0 {21.23}	
		941	919.0 {32.42}	
		753	960.2 {33.87}	
		759	976.0 {34.43}	
		755	976.4 {34.44}	
		756	976.7 {34.45}	
		741	976.8 {34.46}	

PRIMARY COLOR MIXTURE CHART FOR BODY COLORS

COLOR CODE	COLOR NAME	KIND OF PAINT	POLYURETHANE	
		LABEL	DELTRON	
		INGREDIENTS	1L g{oz}	NOTE
25E	STRATO BLUE MC	958	336.0 {11.85}	
		776	653.0 {23.03}	
		763	768.0 {27.09}	
		740	869.0 {30.65}	
		755	965.0 {34.04}	
25F	GARNET RED MC	775	343.0 {12.10}	
		774	511.0 {18.02}	
		793	679.0 {23.95}	
		955	818.0 {28.85}	
		759	891.0 {31.43}	
		756	955.0 {33.69}	
		753	957.2 {33.76}	
25G	TITANIUM GRAY M	952	682.0 {24.06}	
		756	911.0 {32.13}	
		741	928.6 {32.75}	
		755	939.3 {33.13}	
		955	950.0 {33.51}	
		799	958.0 {33.79}	
25H	SILVER CONTRAIL M	952	936.0 {33.02}	
		759	943.5 {33.28}	
		740	949.5 {33.49}	
		797	953.5 {33.63}	
		963	956.7 {33.75}	
		743	959.2 {33.83}	
		753	960.2 {33.87}	

PRIMARY COLOR MIXTURE CHART FOR BODY COLORS

DIAMONT

COLOR CODE	COLOR NAME	KIND OF PAINT LABEL INGREDIENTS		POLYURETHANE DIAMONT BASE g{oz}	POLYURETHANE SOLO DE DIAMONT BASE g{oz}
A3E	CLASSIC RED CLE	BC 020	REDUCER(THINNER)	88.0 {3.10}	
		BC 832	RED 2	618.7 {21.82}	
		BC 816	ORGANIC BRIGHT RED	915.4 {32.29}	
		BC 250	CARBON BLACK 2	923.8 {32.59}	
A4D	ARCTIC WHITE CLE	BC 020	REDUCER(THINNER)	88.0 {3.10}	
		BC 190	WHITE	962.4 {33.95}	
		BC 209	BLACK TINT	1,030.3 {36.34}	
		BC 609	YELLOW TINT	1,078.9 {38.06}	
		BC 809	RED TINT	1,093.6 {38.57}	
16W	BLACK MC	BC 020	REDUCER(THINNER)	88.0 {3.10}	
		BC 200	CARBON BLACK	667.8 {23.56}	
		BC 406	PHTALO BLUE 3	742.7 {26.20}	
		BC 470	INDO BLUE	809.1 {28.54}	
		BC 118	BLUE PEARL	842.1 {29.70}	
		BC 171	MEDIUM ROUND ALUMINUM	867.4 {30.60}	
		BC 805	IRON RED	876.9 {30.93}	
		BC 101	FLOP CONTROL	916.8 {32.34}	
18J	GRACE GREEN MC	BC 020	REDUCER(THINNER)	88.0 {3.10}	
		BC 500	PHTALO GREEN 1	393.4 {13.88}	
		BC 200	CARBON BLACK 1	653.5 {23.05}	
		BC 1255	GREEN PEARL	781.8 {27.58}	
		BC 406	PHTALO PEARL 3	882.3 {31.12}	
		BC 105	WHITE TINT	895.3 {31.58}	
		BC 101	FLOP CONTROL	926.7 {32.69}	
24E	SPARKLING SILVER M	BC 020	REDUCER(THINNER)	88.0 {3.10}	
		BC 171	MEDIUM ROUND ALUMINUM	735.1 {25.93}	
		BC 600	INORGANIC YELLOW 1	839.5 {29.61}	
		BC 180	COARSE ALUMINUM	882.9 {31.14}	
		BC 200	CARBON BLACK 1	918.5 {32.40}	
		BC 805	IRON RED 2	929.9 {32.80}	
25B	BLUE PACIFIC MC	BC 020	REDUCER(THINNER)	88.0 {3.10}	
		BC 406	PHTALO PEARL 3	382.5 {13.49}	
		BC 118	BLUE PEARL	587.2 {20.71}	
		BC 400	PHTALO BLUE 1	789.5 {27.85}	
		BC 300	VIOLET	869.4 {30.67}	
		BC 200	CARBON BLACK 1	894.9 {31.57}	
		BC 140	MEDIUM FINE ALUMINUM	916.1 {32.31}	
		BC 171	MEDIUM ROUND ALUMINUM	926.4 {32.68}	

PRIMARY COLOR MIXTURE CHART FOR BODY COLORS

COLOR CODE	COLOR NAME	KIND OF PAINT / LABEL / INGREDIENTS		POLYURETHANE	
				DIAMONT BASE g{oz}	SOLO DE DIAMONT BASE g{oz}
25C	CANARY YELLOW MC	GROUND COAT			
		BC 020	REDUCER(THINNER)	88.0 {3.10}	
		BC 621	ORGANIC YELLOW 2	500.1 {17.64}	
		BC 190	WHITE	857.0 {30.23}	
		BC 615	ORGANIC YELLOW 3	983.4 {34.69}	
		BC 805	IRON RED 2	1,016.7 {35.86}	
		BC 250	LAMP BLACK	1,026.0 {36.19}	
		COLOR BASE			
		BC 020	REDUCER(THINNER)	88.0 {3.10}	
		BC 111	WHITE PEARL	339.8 {11.99}	
		BC 100	MIXING CLEAR	551.1 {19.44}	
		BC 605	INORGANIC YELLOW 2	709.4 {25.02}	
		CB 63L	CRYSTAL BRASS	780.0 {27.51}	
		BC 621	ORGANIC YELLOW 2	824.2 {29.07}	
		BC 615	ORGANIC YELLOW 3	837.1 {29.53}	
		BC 101	FLOP CONTROL	969.3 {34.19}	
25D	SNOWFLAKE WHITE PEARL MC	GROUND COAT			
		BC 020	REDUCER(THINNER)	88.0 {3.10}	
		BC 190	WHITE	1,010.9 {35.66}	
		BC 209	BLACK TINT	1,058.6 {37.34}	
		BC 809	RED TINT	1,080.7 {38.12}	
		BC 609	YELLOW TINT	1,097.2 {38.70}	
		BC 409	BLUE TINT	1,103.6 {38.93}	
		PEARL BASE			
		BC 020	REDUCER(THINNER)	88.0 {3.10}	
		BC 100	MIXING CLEAR	721.9 {25.46}	
		BC 111	WHITE PEARL	779.3 {27.49}	
		BC 1265	GOLD PEARL 2	804.4 {28.37}	
		BC 101	FLOP CONTROL	910.9 {32.13}	
25E	STRATO BLUE MC	BC 020	REDUCER(THINNER)	88.0 {3.10}	
		BC 200	CARBON BLACK 1	290.4 {10.24}	
		BC 100	MIXING CLEAR	479.2 {16.90}	
		BC 400	PHTALO BLUE 1	646.4 {22.80}	
		BC 406	PHTALO PEARL 3	725.3 {25.58}	
		BC 118	BLUE PEARL	794.2 {28.01}	
		BC 300	VIOLET	860.3 {30.35}	
		CB 34M	CRYSTAL VIOLET	923.2 {32.56}	
		BC 111	WHITE PEARL	931.3 {32.85}	
25F	GARNET RED MC	BC 020	REDUCER(THINNER)	88.1 {3.11}	
		BC 820	MAROON 1	423.7 {14.95}	
		BC 840	MAGENTA	658.7 {23.23}	
		BC 115	RUSSET PEARL	742.6 {26.19}	
		BC 200	CARBON BLACK 1	771.8 {27.22}	
		BC 1265	GOLD PEARL 2	796.8 {28.11}	
		BC 101	FLOP CONTROL	927.1 {32.70}	

PRIMARY COLOR MIXTURE CHART FOR BODY COLORS

COLOR CODE	COLOR NAME	KIND OF PAINT / LABEL / INGREDIENTS		POLYURETHANE	
				DIAMONT BASE g{oz}	SOLO DE DIAMONT BASE g{oz}
25G	TITANIUM GRAY M	BC 020	REDUCER(THINNER)	88.0 {3.10}	
		BC 175	MEDIURM SHINY ALUMIUIUM	639.4 {22.55}	
		BC 200	CARBON BLACK 1	739.5 {26.08}	
		BC 115	RUSSET PEARL	822.8 {29.02}	
		BC 180	COARSE ALUMINUM	866.8 {30.57}	
		BC 410	PHTALO BLUE 2	892.1 {31.47}	
		BC 300	VIOLET	915.0 {32.28}	
		BC 250	LAMP BLACK	926.7 {32.69}	
		BC 101	FLOP CONTROL	936.0 {33.02}	
25H	SILVER CONTRAIL M	BC 020	REDUCER(THINNER)	88.0 {3.10}	
		BC 171	MEDIUM ROUND ALUMINUM	787.3 {27.77}	
		BC 170	MEDIUM ALUMINIUM	854.7 {30.15}	
		BC 200	CARBON BLACK 1	883.9 {31.18}	
		BC 510	PHTALO GREEN 2	893.4 {31.51}	
		BC 406	PHTALO PEARL 3	902.6 {31.84}	
		BC 101	FLOP CONTROL	928.3 {32.74}	

PRIMARY COLOR MIXTURE CHART FOR BODY COLORS

GLASURIT

COLOR CODE	COLOR NAME	KIND OF PAINT	POLYURETHANE	
		LABEL	GLASSOMAX BASE COAT	GLASSODUR PUR TOP COAT 21-
		INGREDIENTS	g{oz}	g{oz}
A3E	CLASSIC RED CLE	352-91	173.8 {6.13}	
		A 352	646.0 {22.79}	
		A 324	910.8 {32.13}	
		A 974	918.2 {32.39}	
A4D	ARCTIC WHITE CLE	352-91	173.8 {6.13}	
		M 25	950.9 {33.54}	
		A 927	1,011.3 {35.67}	
		A 137	1,054.5 {37.20}	
		A 307	1,067.6 {37.66}	
16W	BLACK MC	M99/19	30.0 {1.06}	
		69-M505	70.0 {2.47}	
		A 098	80.0 {2.82}	
		A 531	135.0 {4.76}	
		A 555	215.0 {7.58}	
		A 926	988.0 {34.85}	
		A 105	1,000.0 {35.27}	
18J	GRACE GREEN MC	35291	174.2 {6.14}	
		M 600	288.3 {10.17}	
		A 640	561.0 {19.79}	
		A 926	791.8 {27.93}	
		A 555	880.7 {31.07}	
		A 125	891.8 {31.46}	
		M 1	919.4 {32.43}	
24E	SPARKLING SILVER M	352-91	173.8 {6.13}	
		M 99/19	748.9 {26.42}	
		M 99/20	787.5 {27.78}	
		A 136	880.4 {31.05}	
		A 926	912.0 {32.17}	
		M 306	922.1 {32.53}	
25B	BLUE PACIFIC MC	352-91	173.8 {6.13}	
		M 505	355.8 {12.55}	
		M 99/10	374.6 {13.21}	
		M 99/19	383.8 {13.54}	
		A 555	645.4 {22.77}	
		A 552	825.3 {29.11}	
		A 427	896.3 {31.62}	
		A 926	919.0 {32.42}	

PRIMARY COLOR MIXTURE CHART FOR BODY COLORS

COLOR CODE	COLOR NAME	KIND OF PAINT	POLYURETHANE	
		LABEL	GLASSOMAX BASE COAT	GLASSODUR PUR TOP COAT 21-
		INGREDIENTS	g{oz}	g{oz}
25C	CANARY YELLOW MC	GROUND COAT		
		352-91	173.8 {6.13}	
		A 143	540.1 {19.05}	
		M 25	857.1 {30.23}	
		M 146	969.4 {34.19}	
		M 306	999.0 {35.24}	
		A 974	1,007.2 {35.53}	
		COLOR BASE		
		352-91	173.8 {6.13}	
		M 010	397.9 {14.04}	
		E 910	460.6 {16.25}	
		M 0	648.4 {22.87}	
		M 105	789.1 {27.83}	
		A 143	828.4 {29.22}	
		M 146	839.8 {29.62}	
		M 1	957.2 {33.76}	
25D	SNOWFLAKE WHITE PEARL MC	GROUND COAT		
		352-91	173.8 {6.13}	
		M 25	994.0 {35.06}	
		A 927	1,036.4 {36.56}	
		A 307	1,056.0 {37.25}	
		A 137	1,070.7 {37.77}	
		A 553	1,076.4 {37.97}	
		PEARL BASE		
		352-91	173.8 {6.13}	
		M 010	224.9 {7.93}	
		M 179	247.2 {8.72}	
		M 0	810.6 {28.59}	
		M 1	905.3 {31.93}	
25E	STRATO BLUE MC	352-91	173.8 {6.13}	
		M 505	235.0 {8.29}	
		E 440	290.9 {10.26}	
		M 010	298.0 {10.51}	
		A 926	478.2 {16.87}	
		M 0	646.0 {22.79}	
		A 552	794.7 {28.03}	
		A 555	864.8 {30.50}	
		A 427	923.5 {32.57}	
25F	GARNET RED MC	352-91	173.8 {6.13}	
		M 800	248.4 {8.76}	
		M 179	270.6 {9.54}	
		A 347	569.0 {20.07}	
		A 353	778.0 {27.44}	
		A 926	804.0 {28.36}	
		M 1	919.8 {32.44}	

PRIMARY COLOR MIXTURE CHART FOR BODY COLORS

COLOR CODE	COLOR NAME	KIND OF PAINT	POLYURETHANE	
		LABEL	GLASSOMAX BASE COAT	GLASSODUR PUR TOP COAT 21-
		INGREDIENTS	g{oz}	g{oz}
25G	TITANIUM GRAY M	352-91	173.8 {6.13}	
		M 99/22	663.8 {23.41}	
		M 800	737.9 {26.03}	
		M 99/20	777.0 {27.41}	
		A 926	866.0 {30.55}	
		A 548	888.4 {31.34}	
		A 427	908.8 {32.06}	
		A 974	919.2 {32.42}	
		M 1	927.5 {32.72}	
25H	SILVER CONTTAIL M	352-91	173.8 {6.13}	
		M 99/19	795.4 {28.06}	
		M 99/12	855.3 {30.17}	
		A 926	881.3 {31.09}	
		A 696	889.8 {31.39}	
		A 555	898.0 {31.68}	
		M 1	920.8 {32.48}	

Mazda6 Bodyshop Manual

FOREWORD

This bodyshop manual is intended for use by technicians of Authorized Mazda Dealers to help them service and repair Mazda vehicles. It can also be useful to owners and operators of Mazda vehicles in performing limited repair and maintenance on Mazda vehicles.

For proper repair and maintenance, a thorough familiarization with this manual is important, and it should always be kept in a handy place for quick and easy reference.

All the contents of this manual, including drawings and specifications, are the latest available at the time of printing.
As modifications affecting repair or miantenance occur, relevant information supplementary to this volume will be made available at Mazda dealers. This manual should be kept up-to-date.

Mazda Motor Corporation reserves the right to alter the specifications and contents of this manual without obligation or advance notice.

All rights reserved. No part of this book may be reproduced or used in any form or by any means, electronic or mechanical including photocopying and recording and the use of any kind of information storage and retrieval system-without permission in writing.

Mazda Motor Corporation
HIROSHIMA, JAPAN

APPLICATION:

This manual is applicable to vehicles beginning with the Vehicle Identification Numbers (VIN) shown on the following page.

CONTENTS

Title	Section
GENERAL INFORMATION	I
CONSTRUCTION	II
PANEL REPLACEMENT	III
WATER-PROOF AND RUST PREVENTIVE TREATMENT	IV
DIMENSIONS	V
PLASTIC BODY PARTS	VI
PRIMARY COLOR MIXTURE CHART FOR BODY COLORS	VII

© 2002 Mazda Motor Corporation
PRINTED IN THE NETHERLANDS, March 2002
3360–1E–02C

WARNING

Servicing a vehicle can be dangerous. If you have not received service-related training, the risks of injury, property damage, and failure of servicing increase. The recommended servicing procedures for the vehicle in this workshop manual were developed with Mazda-trained technicians in mind. This manual may be useful to non-Mazda trained technicians, but a technician with our service-related training and experience will be at less risk when performing service operations. However, all users of this manual are expected to at least know general safety procedures.

This manual contains "Warnings" and "Cautions" applicable to risks not normally encountered in a general technician's experience. They should be followed to reduce the risk of injury and the risk that improper service or repair may damage the vehicle or render it unsafe. It is also important to understand that the "Warnings" and "Cautions" are not exhaustive. It is impossible to warn of all the hazardous consequences that might result from failure to follow the procedures.

The procedures recommended and described in this manual are effective methods of performing service and repair. Some require tools specifically designed for a specific purpose. Persons using procedures and tools which are not recommended by Mazda Motor Corporation must satisfy themselves thoroughly that neither personal safety nor safety of the vehicle will be jeopardized.

The contents of this manual, including drawings and specifications, are the latest available at the time of printing, and Mazda Motor Corporation reserves the right to change the vehicle designs and alter the contents of this manual without notice and without incurring obligation.

Parts should be replaced with genuine Mazda replacement parts or with parts which match the quality of genuine Mazda replacement parts. Persons using replacement parts of lesser quality than that of genuine Mazda replacement parts must satisfy themselves thoroughly that neither personal safety nor safety of the vehicle will be jeopardized.

Mazda Motor Corporation is not responsible for any problems which may arise from the use of this manual. The cause of such problems includes but is not limited to insufficient service-related training, use of improper tools, use of replacement parts of lesser quality than that of genuine Mazda replacement parts, or not being aware of any revision of this manual.

VEHICLE IDENTIFICATION NUMBERS (VIN)

European (L.H.D.) specs.

JMZ	GG1232*#	100001—	JMZ	GG1432*#	100001—
JMZ	GG1282*#	100001—	JMZ	GG1482*#	100001—
JMZ	GG12F2*#	100001—	JMZ	GG14F2*#	100001—
JMZ	GG12F5*#	100001—	JMZ	GG14F5*#	100001—

U.K. specs.

JMZ	GG12820#	100001—	JMZ	GG14820#	100001—
JMZ	GG12F20#	100001—	JMZ	GG14F20#	100001—
JMZ	GG12F50#	100001—	JMZ	GG14F50#	100001—
JMZ	GG14320#	100001—			

GCC specs.

JM7	GG32F**#	100001—	JM7	GG34F**#	100001—
JM7	GG42F**#	100001—	JM7	GG44F**#	100001—

GENERAL INFORMATION

HOW TO USE THIS MANUAL I-2
HOW TO READ EFFICIENT REPLACEMENT OF BODY PANELS..... I-2
HOW TO READ BODY DIMINSIONS..... I-3
SERVICE PRECAUTIONS I-5
SERVICE PRECAUTIONS I-5
EFFICIENT REPLACEMENT OF BODY PANELS..... I-7
EFFICIENT REMOVAL OF BODY PANELS..... I-7
INSTALLATION PREPARATIONS I-8
EFFICIENT INSTALLATION OF BODY PANELS..... I-9
AFTER-INSTALLATION RUST PROOFING, NOISE AND VIBRATION INSULATING I-12

HOW TO USE THIS MANUAL

HOW TO READ EFFICIENT REPLACEMENT OF BODY PANELS

A6E201000001B01

- This section contains information on the body panels in regard to the welding types, number of spot welds, and cut-and-join locations that are necessary for panel removal and installation.
- The type of weld and positions and indicated by symbol.
- Some sections have notes concerning the operation being performed. thoroughly read and understand the notes before carrying out any procedures.

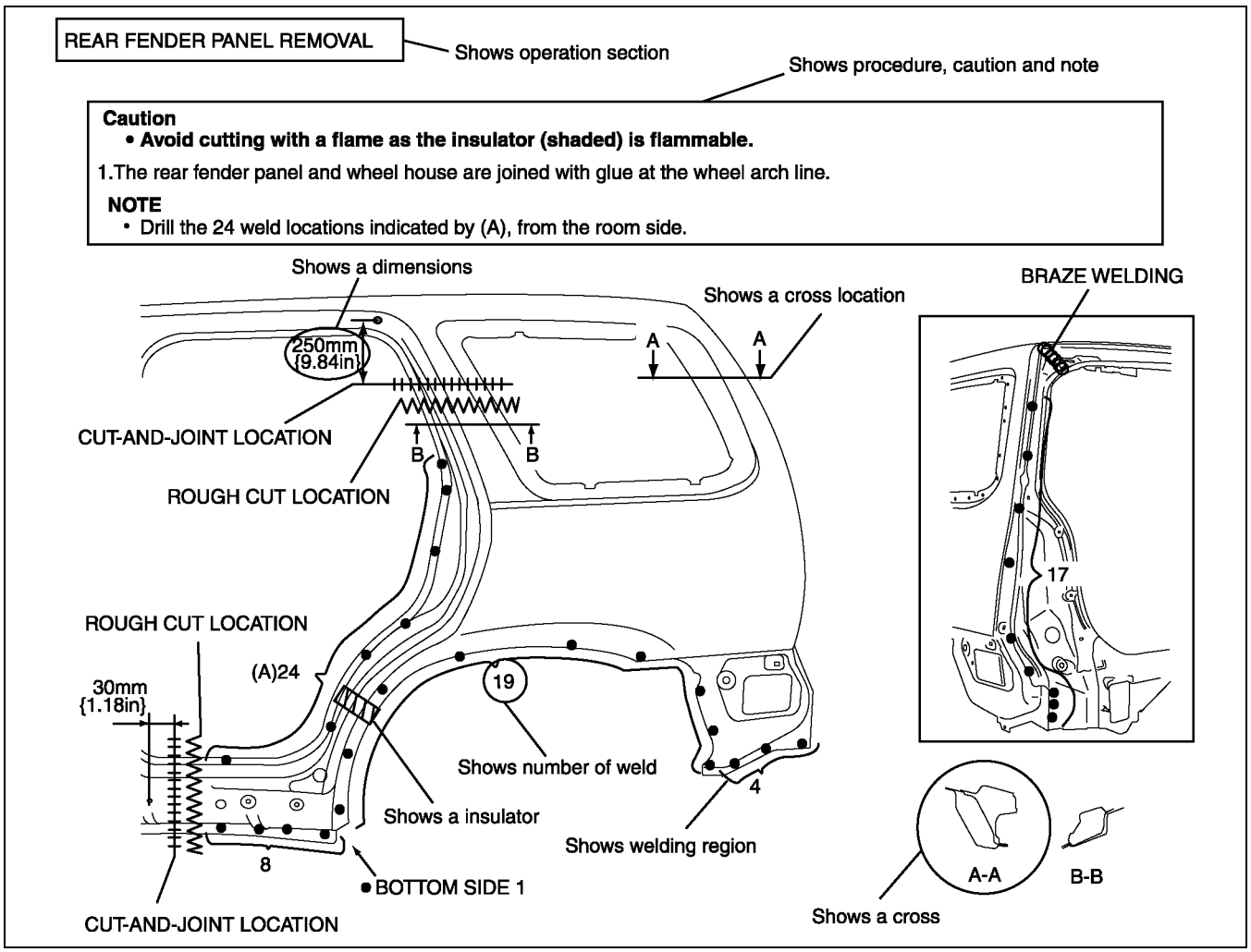

MZZ2010B001

Symbols of Panel Replacement

- The following 6 symbols are used to indicate the type of weld that is used when replacing body panels.

SYMBOL	MEANING
●	Spot welding
■	CO^2 arc welding (plug welding)
+	CO^2 spot welding

SYMBOL	MEANING
|||||	Continuous MIG welding (Cut-and-join location)
○○○	Braze welding
⋀⋀⋀	Rough cut location

MZZ2010B002

HOW TO READ BODY DIMINSIONS

A6E201000001B02

Body Dimensions (Flat-plane Dimensions)

- Flat-plane dimensions are the dimensions measured by projecting certain reference points onto a plane surface.
- When there are no specific indications, the standard points and dimensions are symmetrical in regard to the center of the vehicle.
- The hypothetical lines may differ according to the vehicle model.
- The outline drawing shows the figure that projected vehicle from the upper side.

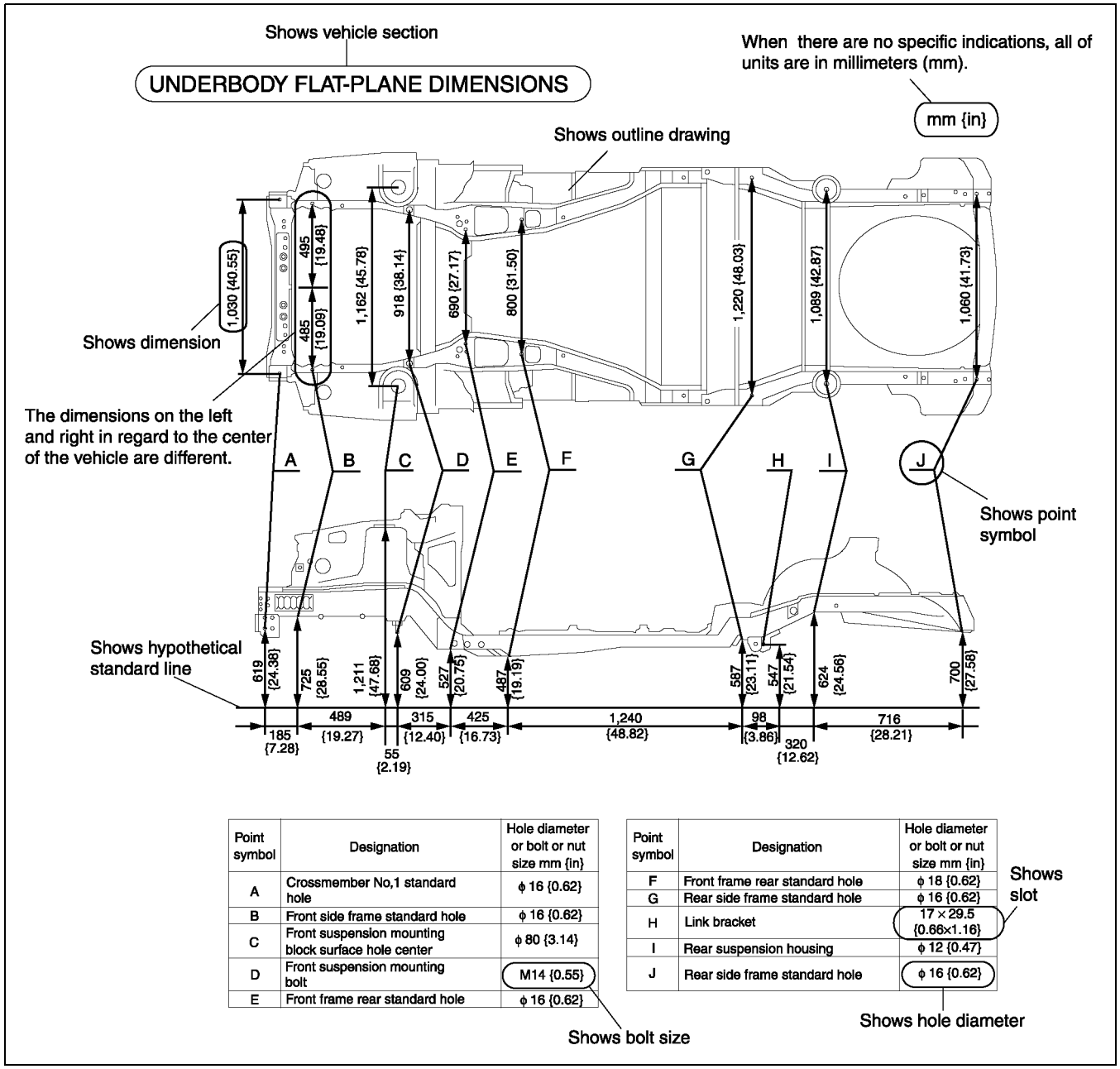

Point symbol	Designation	Hole diameter or bolt or nut size mm {in}
A	Crossmember No,1 standard hole	ϕ 16 {0.62}
B	Front side frame standard hole	ϕ 16 {0.62}
C	Front suspension mounting block surface hole center	ϕ 80 {3.14}
D	Front suspension mounting bolt	M14 {0.55}
E	Front frame rear standard hole	ϕ 16 {0.62}

Shows bolt size

Point symbol	Designation	Hole diameter or bolt or nut size mm {in}
F	Front frame rear standard hole	ϕ 18 {0.62}
G	Rear side frame standard hole	ϕ 16 {0.62}
H	Link bracket	17 × 29.5 {0.66×1.16}
I	Rear suspension housing	ϕ 12 {0.47}
J	Rear side frame standard hole	ϕ 16 {0.62}

Shows slot

Shows hole diameter

MZZ2010B003

Body Dimensions (Straight-line Dimensions)

- Straight-line dimensions are the actual dimensions between two standard points.
- When there are no specific indications, the standard points and dimensions are symmetrical in regard to the center of the vehicle.

ROOM STRAIGHT-LINE DIMENSIONS (2)

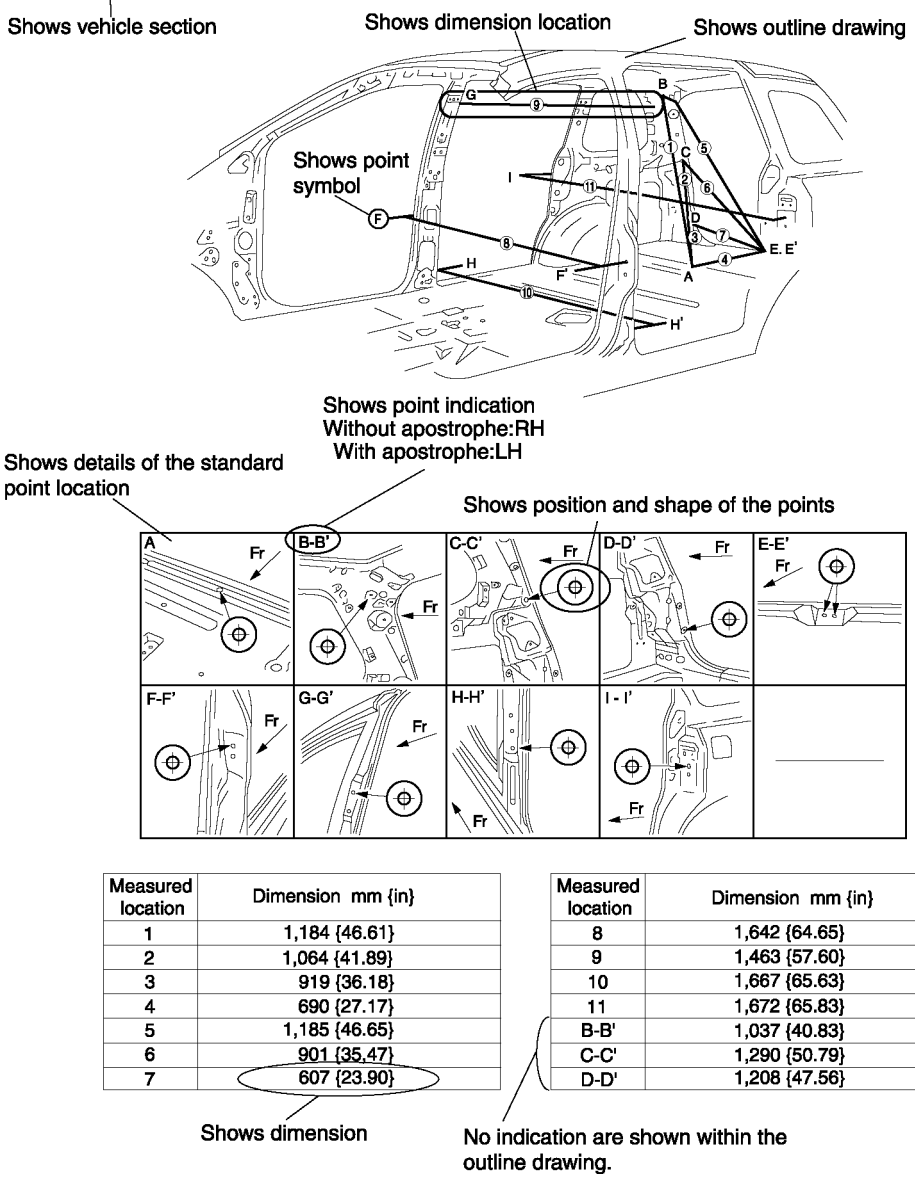

Measured location	Dimension mm {in}
1	1,184 {46.61}
2	1,064 {41.89}
3	919 {36.18}
4	690 {27.17}
5	1,185 {46.65}
6	901 {35.47}
7	607 {23.90}

Measured location	Dimension mm {in}
8	1,642 {64.65}
9	1,463 {57.60}
10	1,667 {65.63}
11	1,672 {65.83}
B-B'	1,037 {40.83}
C-C'	1,290 {50.79}
D-D'	1,208 {47.56}

Shows dimension

No indication are shown within the outline drawing.

MZZ2010B004

Symbols of Body Dimensions

- The following 8 symbols are used to indicate the standard points.

SYMBOL	MEANING
⊕	Center of circular hole
⊕	Center elliptical hole
⊕	Edge of hole
⊕	Notch

SYMBOL	MEANING
⊕	Panel seam, bead, etc.
← (arrow only)	Bolt tip
⊕	Center of rectangular-shaped hole
⊕	Edge of rectangular-shaped hole

MZZ2010B005

SERVICE PRECAUTIONS

SERVICE PRECAUTIONS

A6E203600025B01

Arrangement of Workshop

- Arrangement of the workshop is important for safe and efficient work.

Safety Precautions

- Protective head covering and safety shoes should always be worn. Depending upon the nature of the work, gloves, safety glasses, ear protectors, face shield, etc., should also be used.

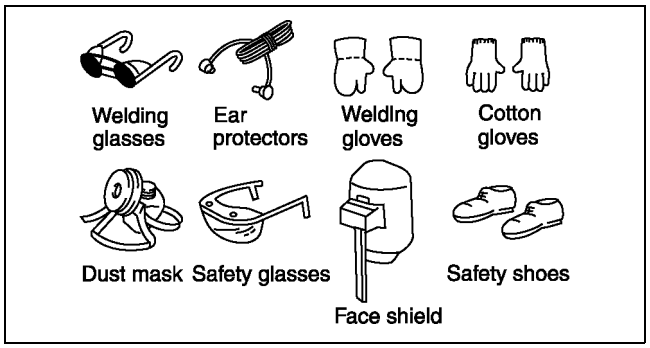

MZZ2036B001

Vehicle Protection

- Use seat covers and floor covers.
- Use heat-resistant protective covers to protect glass areas and seats from heat or sparks during welding.
- Protect items such as moldings, garnishes, and ornaments with tape when welding.

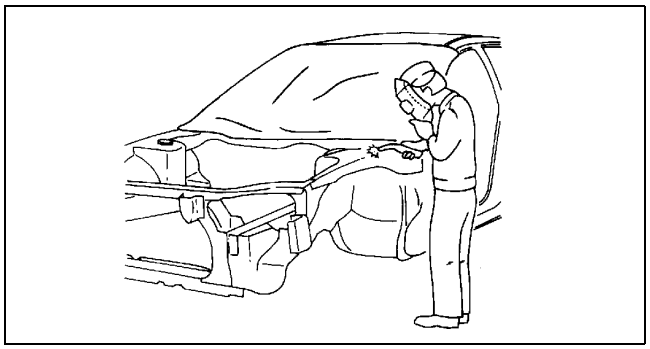

MZZ2036B002

Remove Dangerous Articles

- Remove the fuel tank before using an open flame in that area. Plug connection piping to prevent fuel leakage.

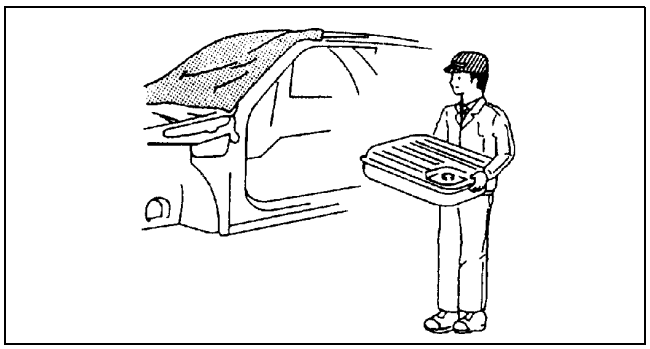

MZZ2036B003

Use of Pulling Equipment

- When using pulling equipment, keep away from the pulling area and use safety wires to prevent accidents.

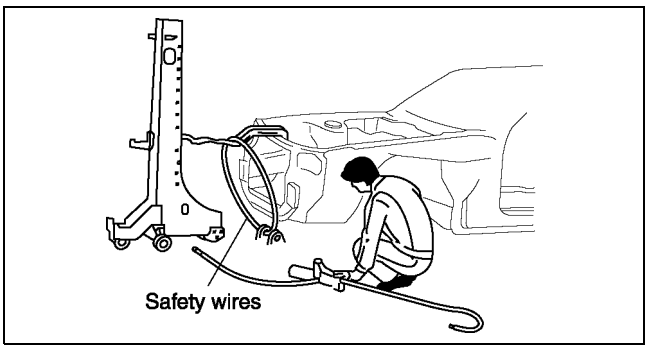

MZZ2036B004

Prevent Short Circuits

- Turn the ignition switch to the LOCK position.
- Disconnect the buttery cables.

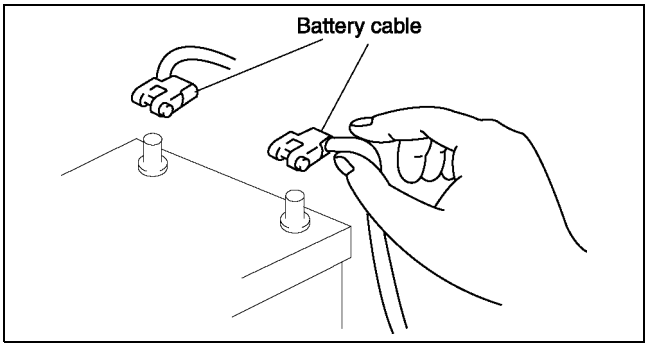

MZZ2036B005

- Securely connect the welding machine ground near the welding area.

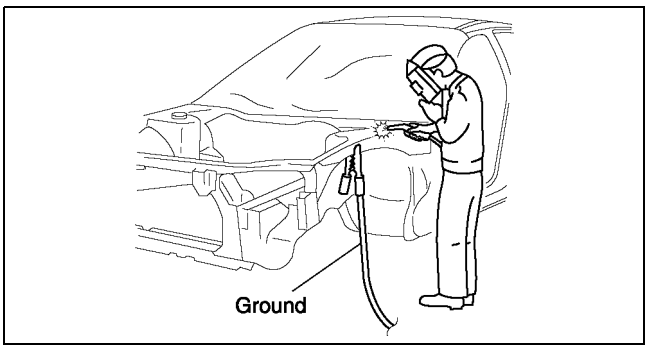

MZZ2036B006

EFFICIENT REPLACEMENT OF BODY PANELS

EFFICIENT REMOVAL OF BODY PANELS

A6E203800026B01

Body Measurements

- Before removal or rough-cutting, first measure the body at and around the damaged area against the standard reference dimension specifications. If there is deformation, use frame repair equipment to make a rough correction.

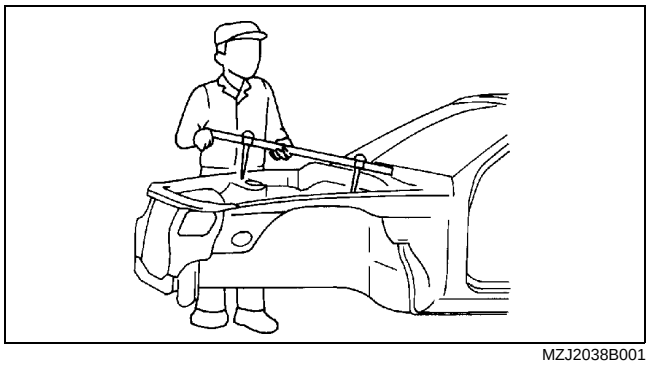

MZJ2038B001

Prevention of Body Deformation

- Use a clamp or a jack for removal and reinforce at and around the rough-cutting location to prevent deforming of the body.

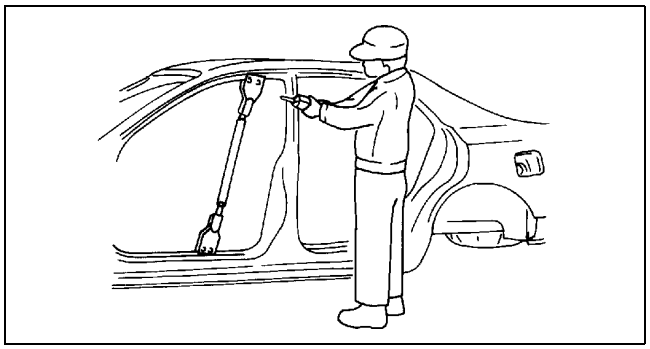

MZJ2038B002

Selection of Cut-and-join Locations

- For parts where complete replacement is not feasible, careful cutting and joining operations should be followed. If the location to be cut is a flat area where there is no reinforcement, the selected cutting location should be where the welding distortion will be minimal.

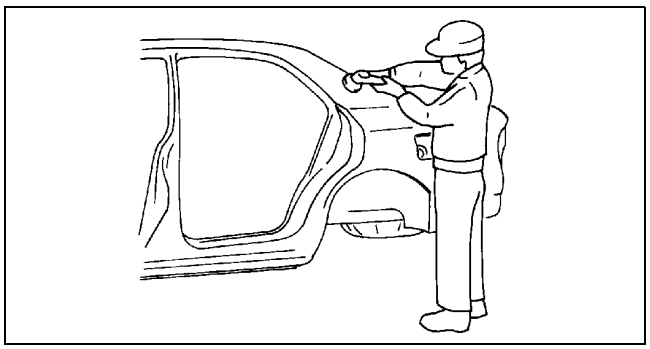

MZJ2038B003

Remove of Associated Parts

- Protect moldings, garnishes, and ornaments with tape when removing associated parts.

Rough Cutting of Damaged Panel

- Verify that there are no parts (such as pipes, hoses, and wiring harness) nearby or on the opposite side of a panel which could be damaged by heat.
- For cut-and-join areas, allow for an overlap of 30—50 mm {1.18—1.97 in} and then rough-cut the damaged panel.

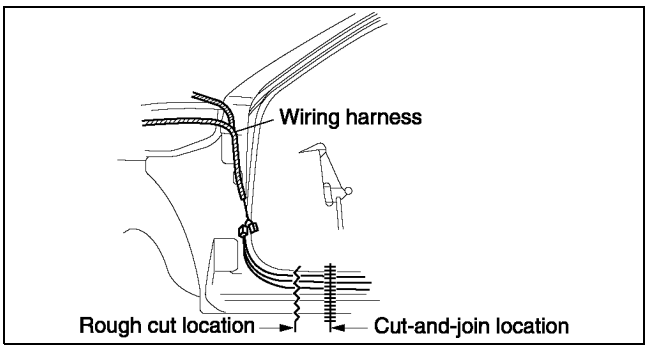

MZZ2038B001

INSTALLATION PREPARATIONS

A6E203800026B02

Rough Cutting of New Parts

- For cut-and-join areas, allow for an overlap of 30—50 mm {1.18—1.97 in} with the remaining area on the body side and then rough-cut the new parts.

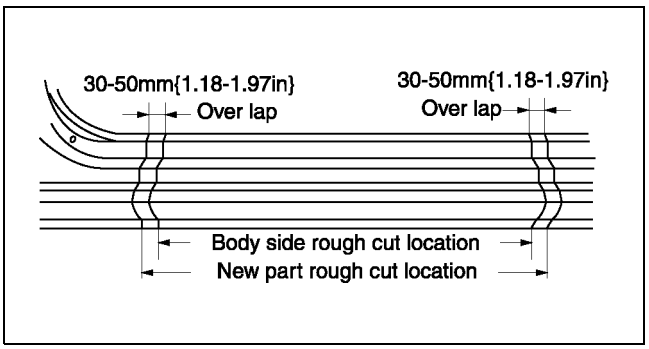

MZZ2038B002

Determination of Welding Method

- If the total thickness at the area to be welded is 3 mm {0.12 in} or more, use a CO_2 gas shielded-arc welder to make the plug welds.

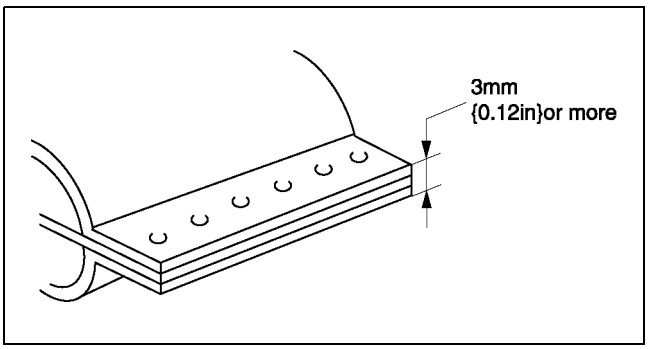

MZZ2038B003

Making Holes for CO_2 Arc Welding

- For places that cannot be spot welded, make a hole for CO_2 arc welding using a punch or drill as follows.

(mm {in})

Board thickness (ø)	Hole diameter (ø)
0.60—0.90 {0.02—0.03}	5 {0.19}
0.91—1.20 {0.04—0.05}	6 {0.23}
1.21—1.80 {0.051—0.07}	8 {0.31}
1.81—4.50 {0.071—0.17}	10 {0.39}

- Grind the shaded section indicated in the diagram below and create a hole in the part where the 3—4 plates are put together. Also, weld the plates together tightly so that gaps do not develop.

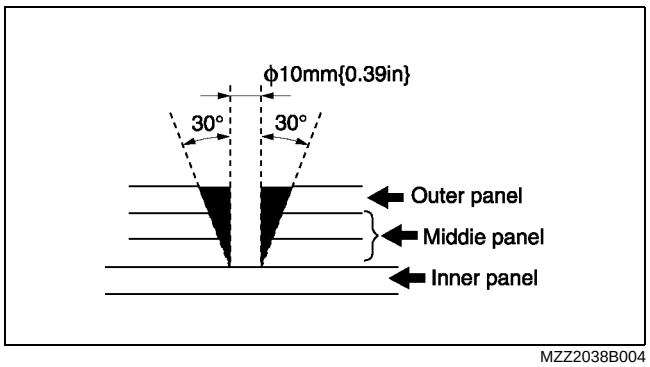

MZZ2038B004

Application of Weld-through Primer

- For treatment against corrosion, remove the paint grease, and other material from the portion of new part and body to be welded, and apply weld-through primer.

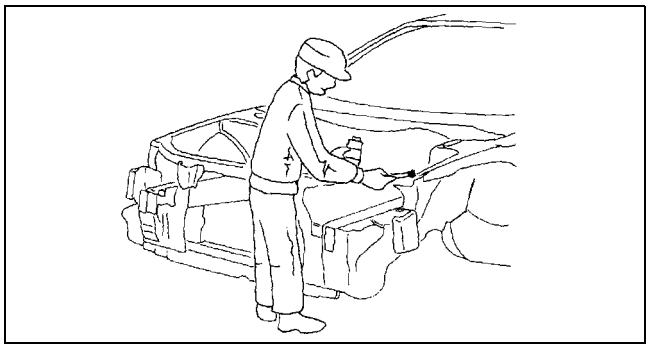

MZJ2038B008

EFFICIENT INSTALLATION OF BODY PANELS

A6E203800026B03

Checking Preweld Measurements And Watching

- Align to the standard reference dimensions, based upon the body dimensions illustration, so that new parts are installed in the correct position.

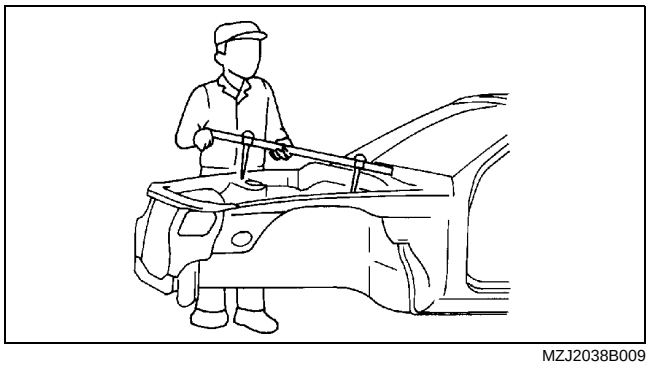

MZJ2038B009

Welding Notes

- For the number of weld points, welding should be performed in accordance with the following reference standards.

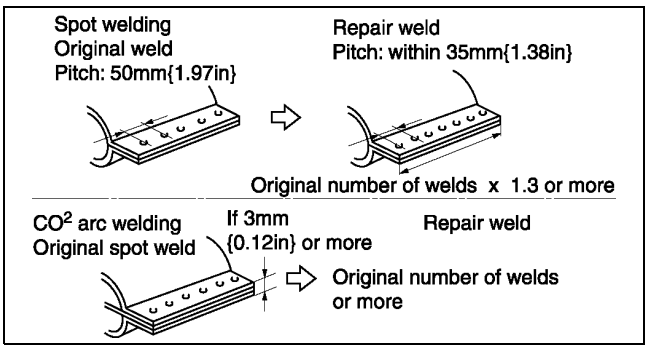

MZZ2038B005

Spot Welding Notes

- The shape of the spot welder tip is D=(2×t)+3. If the upper panel thickness is different from that of the under panel, adjust to the thinner one.

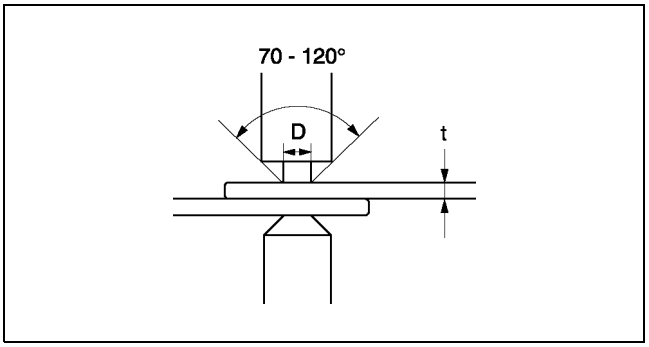

MZZ2038B009

- Because the weld strength is affected by the shape of the spot welder tip, the optimum condition of the tip should always be maintained.
- Spot welds should be made at points other than the originally welded points.

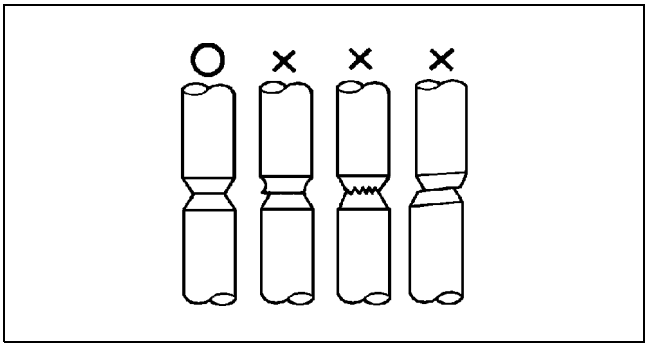

MZJ2038B012

- Before spot welding, make a trial weld using the same material as the body panel to check the weld strength.

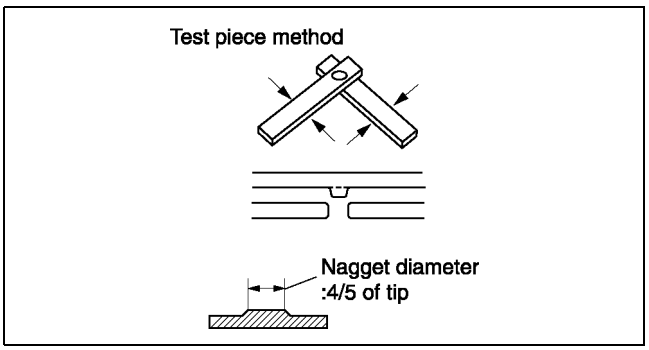

MZZ2038B006

Checking Weld Strength

- Installation locations of the engine, chassis, and seat belts are designated as important safety locations for weld strength. Check weld strength by driving a chisel between the panels at every fourth or fifth weld spot, and every tenth regular weld location.

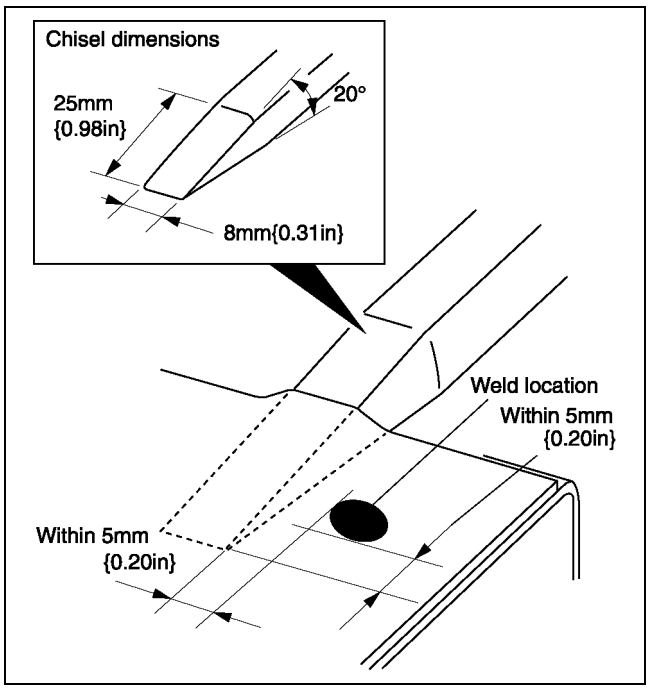

MZZ2038B007

- Drive the chisel between the panels according to the number of panels as shown below.
- To determine weld strength, drive the chisel between the panel and check whether the panels come apart. If the panels come apart, make another weld near the original weld.
- Restore the shape of the checked area.

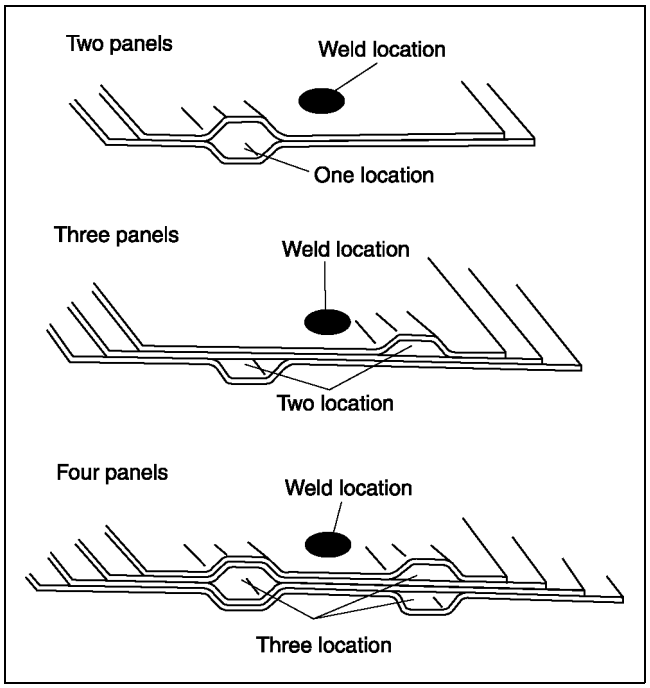

MZZ2038B008

AFTER-INSTALLATION RUST PROOFING, NOISE AND VIBRATION INSULATING

A6E203800026B04

Body Sealing

- Apply body sealer where necessary.
- For locations where application of body sealer is difficult after installation, apply it before installation.

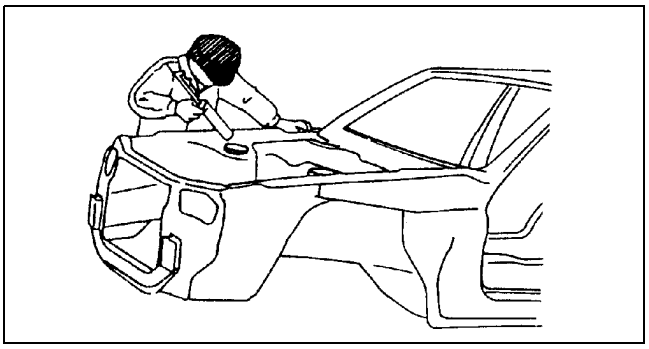

MZJ2038B016

Application of Undercoating

- Apply an undercoat to the required location of the body.

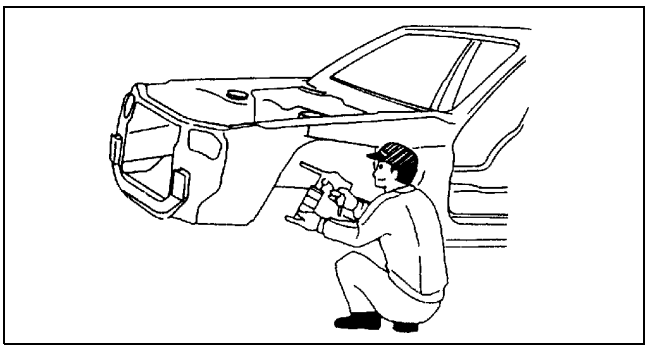

MZJ2038B017

Application of Rust Inhibitor

- Apply rust inhibitor (wax, oil, etc.) to the back of the welded areas.

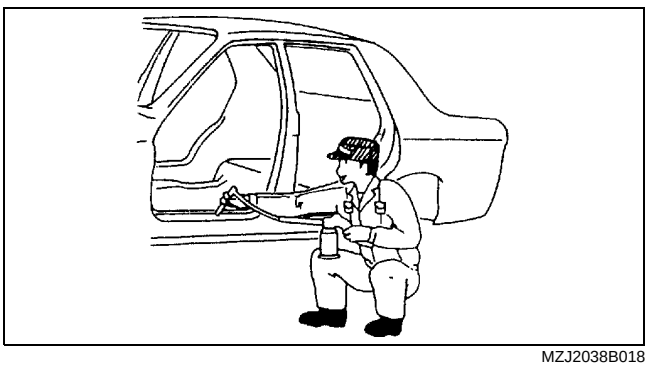

MZJ2038B018

Application of Floor Silencer

- Apply floor silencer by heating with an infrared ray lamp.

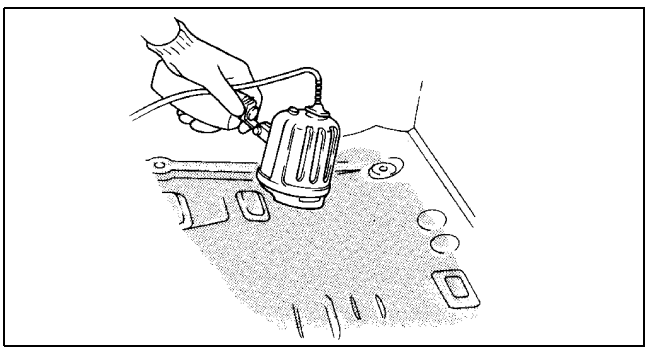

MZJ2038B019

ABBREVIATION

5HB	Five-door hatchback
Fr	Front
Rr	Rear
RH	Right
LH	Left
M	Metallic
MC	Mica

CONSTRUCTION

CONSTRUCTION II-2
CONSTRUCTION II-2

CONSTRUCTION

CONSTRUCTION

A6E981007000B01

SEDAN

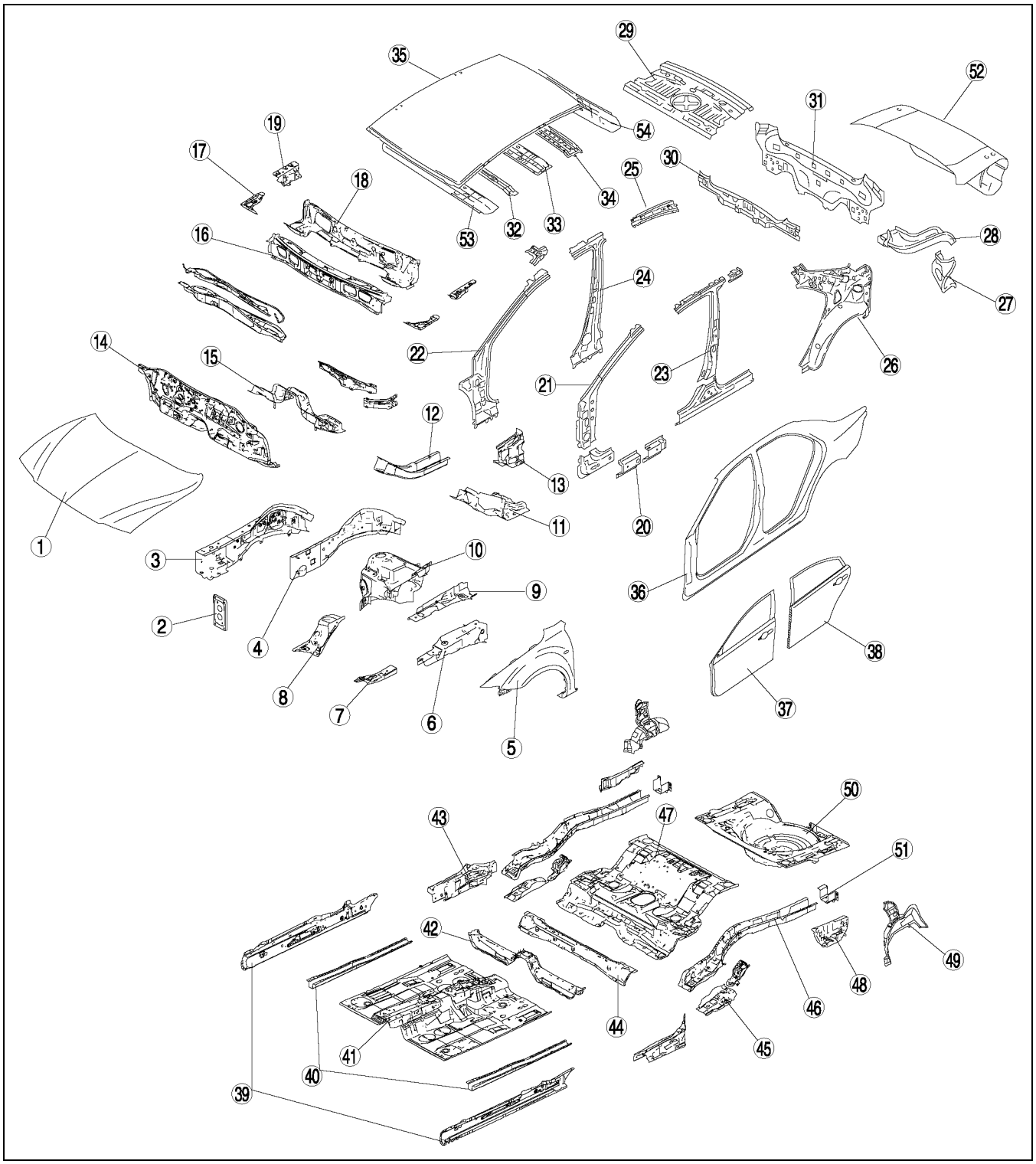

A6J9810B001

x:Applied
-:Not applied

No.	Part Name		High-tension steel	Rust proof steel	Thickness (mm) {in}
1	Bonnet		x	x	0.7{0.028}
2	Front bumper bracket		-	-	2.9{0.114}
3	Front side frame inner	Fr	x	x	1.6{0.063}
		Rr	x	x	2.6{0.102}
4	Front side frame outer	Fr	x	x	1.4{0.055}
		Rr	x	x	2.0{0.079}
5	Front fender panel		x	x	0.75 {0.030}
6	Apron reinforcement upper		-	x	1.0 {0.039}
7	Shroud upper reinforcement		-	x	2.0{0.079}
8	Wheel apron panel front		-	x	0.65 {0.026}
9	Apron reinforcement lower		-	x	1.0 {0.039}
10	Suspension housing	Upper	x	x	3.2{0.126}
		Lower	-	x	1.2{0.047}
11	Torque box		-	x	1.4{0.055}
12	Front frame rear		x	x	2.9{0.114}
13	Cowl side reinforcement		-	x	1.2 {0.047}
14	Dash lower panel		-	x	0.85 {0.033}
15	Member dash lower		-	x	1.6{0.063}
16	Cowl panel		-	x	0.7{0.028}
17	Cowl upper plate		-	x	1.6{0.063}
18	Dash upper panel		-	x	0.9{0.035}
19	Cowl upper plate		x	x	1.4{0.055}
20	Side sill reinforcement		x	x	0.9 {0.035}
21	Front pillar reinforcement		x	-	1.8 {0.071}
22	Front pillar inner	Upper	x	-	1.6{0.063}
		Lower	x	-	1.4{0.055}
23	Center pillar reinforcement	Upper front	x	-	1.8{0.071}
		Upper rear	x	-	1.6{0.063}
		Center	x	-	2.0{0.079}
		Lower	x	-	1.8 {0.071}
24	Center pillar inner	Upper	x	-	1.6{0.063}
		Center	x	-	1.2{0.047}
		Lower	x	-	1.0{0.039}

No.	Part Name		High-tension steel	Rust proof steel	Thickness (mm) {in}
25	Roof rail inner		x	-	1.2{0.047}
26	Rear pillar inner		-	x	0.65 {0.026}
27	Corner plate		-	x	0.7{0.028}
28	Rear fender rain rail		-	x	0.7{0.028}
29	Package tray		-	-	0.65 {0.026}
30	Rear end member		-	-	0.6{0.024}
31	Rear end panel		-	x	0.65 {0.026}
32	Roof reinforcement		-	-	0.5{0.020}
33	Roof reinforcement		x	-	1.4{0.055}
34	Roof reinforcement		-	-	0.55 {0.022}
35	Roof panel		-	-	0.75 {0.030}
36	Side frame outer		-	x	0.7{0.028}
37	Front door		-	x	0.7{0.028}
38	Rear door		-	x	0.7{0.028}
39	Side sill inner		x	x	1.6{0.063}
40	Front B frame	Fr	x	x	2.3{0.091}
		Rr	-	x	1.6{0.063}
41	Front floor pan		-	x	0.65 {0.026}
42	Crossmember No.2		-	-	1.2{0.047}
43	Side sill inner rear		x	x	1.6{0.063}
44	Crossmember No.3		x	-	1.4{0.055}
45	Link bracket		x	x	2.3 {0.091}
46	Rear side frame	Fr	x	x	1.8{0.071}
		Rr	x	x	1.4{0.055}
47	Center floor pan		-	x	0.6{0.024}
48	Floor side panel		-	x	0.6{0.024}
49	Wheel house inner		-	x	0.75 {0.030}
50	Rear floor pan		-	x	0.65{0.26}
51	Rear bumper bracket	LH	x	x	2.0{0.079}
		RH	x	x	1.4{0.055}
52	Trunk lid panel		-	x	0.75 {0.030}
53	Front header		-	-	1.2{0.047}
54	Rear header		-	-	0.65 {0.026}

5HB

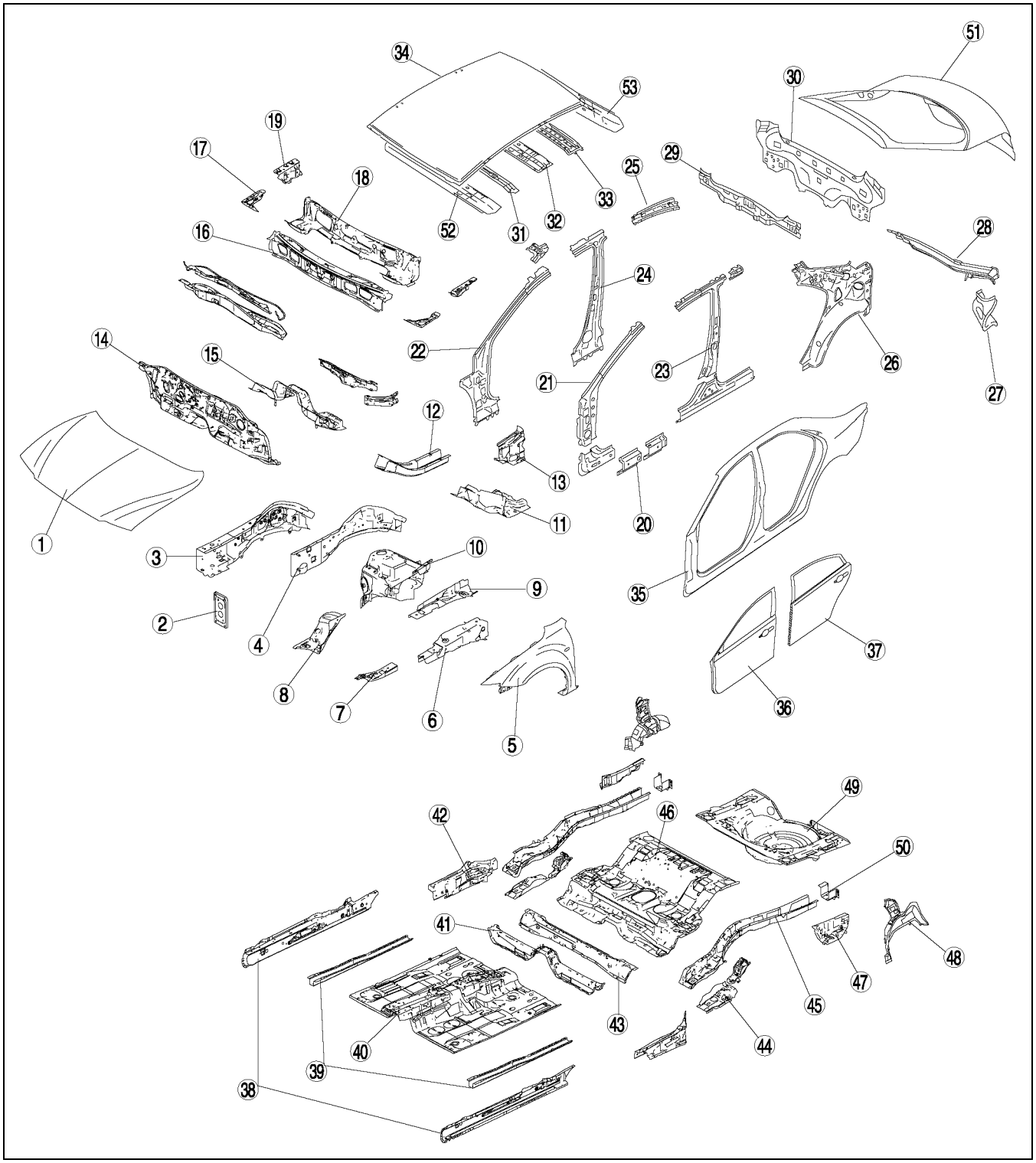

A6J9810B002

x:Applied
-:Not applied

No.	Part Name		High-tension steel	Rust proof steel	Thickness (mm) {in}
1	Bonnet		x	x	0.7{0.028}
2	Front bumper bracket		-	-	2.9{0.114}
3	Front side frame inner	Fr	x	x	1.6{0.063}
		Rr	x	x	2.6{0.102}
4	Front side frame outer	Fr	x	x	1.4{0.055}
		Rr	x	x	2.0{0.079}
5	Front fender panel		x	x	0.75 {0.030}
6	Apron reinforcement upper		-	x	1.0 {0.039}
7	Shroud upper reinforcement		-	x	2.0 {0.079}
8	Wheel apron panel front		-	x	0.65 {0.026}
9	Apron reinforcement lower		-	x	1.0 {0.039}
10	Suspension housing	Upper	x	x	3.2{0.126}
		Lower	-	x	1.2{0.047}
11	Torque box		-	x	1.4{0.055}
12	Front frame rear		x	x	2.9{0.114}
13	Cowl side reinforcement		-	x	1.2 {0.047}
14	Dash lower panel		-	x	0.85 {0.033}
15	Member dash lower		-	x	1.6{0.063}
16	Cowl panel		-	x	0.7{0.028}
17	Cowl upper plate		-	x	1.6{0.063}
18	Dash upper panel		-	x	0.9{0.035}
19	Cowl upper plate		x	x	1.4{0.055}
20	Side sill reinforcement		x	x	0.9 {0.035}
21	Front pillar reinforcement		x	-	1.8 {0.071}
22	Front pillar inner	Upper	x	-	1.6{0.063}
		Lower	x	-	1.4{0.055}
23	Center pillar reinforcement	Upper front	x	-	1.8{0.071}
		Upper rear	x	-	1.6{0.063}
		Center	x	-	2.0{0.079}
		Lower	x	-	1.8 {0.071}
24	Center pillar inner	Upper	x	-	1.6{0.063}
		Center	x	-	1.2{0.047}
		Lower	x	-	1.0{0.039}

No.	Part Name		High-tension steel	Rust proof steel	Thickness (mm) {in}
25	Roof rail inner		x	-	1.2{0.047}
26	Rear pillar inner		-	x	0.65 {0.026}
27	Corner plate		-	x	0.7{0.028}
28	Rear fender rain rail		-	x	0.8{0.031}
29	Rear end member		-	-	0.6{0.024}
30	Rear end panel		-	x	0.65 {0.026}
31	Roof reinforcement		-	-	0.5{0.020}
32	Roof reinforcement		x	-	1.4{0.055}
33	Roof reinforcement		-	-	0.55 {0.022}
34	Roof panel		-	-	0.75 {0.030}
35	Side frame outer		-	x	0.7{0.028}
36	Front door		-	x	0.7{0.028}
37	Rear door		-	x	0.7{0.028}
38	Side sill inner		x	x	1.6{0.063}
39	Front B frame	Fr	x	x	2.3{0.091}
		Rr	-	x	1.6{0.063}
40	Front floor pan		-	x	0.65 {0.026}
41	Crossmember No.2		-	-	1.2{0.047}
42	Side sill inner rear		x	x	1.6{0.063}
43	Crossmember No.3		x	-	1.4{0.055}
44	Link bracket		x	x	2.3 {0.091}
45	Rear side frame	Fr	x	x	1.8{0.071}
		Rr	x	x	1.4{0.055}
46	Center floor pan		-	x	0.6{0.024}
47	Floor side panel		-	x	0.6{0.024}
48	Wheel house inner		-	x	0.75 {0.030}
49	Rear floor pan		-	x	0.65 {0.026}
50	Rear bumper bracket	LH	x	x	2.0{0.079}
		RH	x	x	1.4{0.055}
51	Liftgate panel		-	x	0.7{0.028}
52	Front header		-	-	1.2{0.047}
53	Rear header	Center	-	-	0.7 {0.028}
		Side	-	-	1.4{0.055}

PANEL REPLACEMENT

PANEL REPLACEMENT..... III-2
SHROUD UPPER REINFORCEMENT REMOVAL..... III-2
SHROUD UPPER RAINFORCEMENT INSTALLATION..... III-3
COWL SIDE REINFORCEMENT AND COWL UPPER PLATE REMOVAL..... III-4
COWL SIDE REINFORCEMENT AND COWL UPPER PLATE INSTALLATION..... III-5
APRON REINFORCEMENT ASSEMBLY REMOVAL..... .III-6
APRON REINFORCEMENT ASSEMBLY INSTALLATION..... III-7
WHEEL APRON PANEL ASSEMBLY REMOVAL..... III-8
WHEEL APRON PANEL ASSEMBLY INSTALLATION..... III-9
FRONT SIDE FRAME REMOVAL III-10
FRONT SIDE FRAME INSTALLATION III-11
FRONT PILLAR REMOVAL..... III-12
FRONT PILLAR INSTALLATION..... III-14
CENTER PILLAR REMOVAL III-16
CENTER PILLAR INSTALLATION III-17
REAR FENDER PANEL REMOVAL..... III-18
REAR FENDER PANEL INSTALLATION..... III-20
SIDE SILL PANEL REMOVAL..... III-22
SIDE SILL PANEL INSTALLATION..... III-23
REAR END PANEL REMOVAL III-24
REAR END PANEL INSTALLATION III-26
REAR FENDER RAIN RAIL AND CORNER PLATE REMOVAL III-28
REAR FENDER RAIN RAIL AND CORNER PLATE INSTALLATION III-30
REAR FLOOR PAN REMOVAL..... III-32
REAR FLOOR PAN INSTALLATION..... III-33
FLOOR SIDE PANEL REMOVAL..... III-34
FLOOR SIDE PANEL INSTALLATION..... III-36
REAR SIDE FRAME (PARTIAL CUTTING) REMOVAL..... III-38
REAR SIDE FRAME (PARTIAL CUTTING) INSTALLATION..... III-39
ROOF PANEL REMOVAL III-40
ROOF PANEL INSTALLATION III-42

For shroud panel removal/installation and replacement procedures, refer to the MAZDA6 Workshop Manual (1730-1*-02C)
***:Indicates the printing location**
E-Europe
0-Japan

PANEL REPLACEMENT

SHROUD UPPER REINFORCEMENT REMOVAL

A6E981253152B01

1. Remove the shroud upper reinforcement.

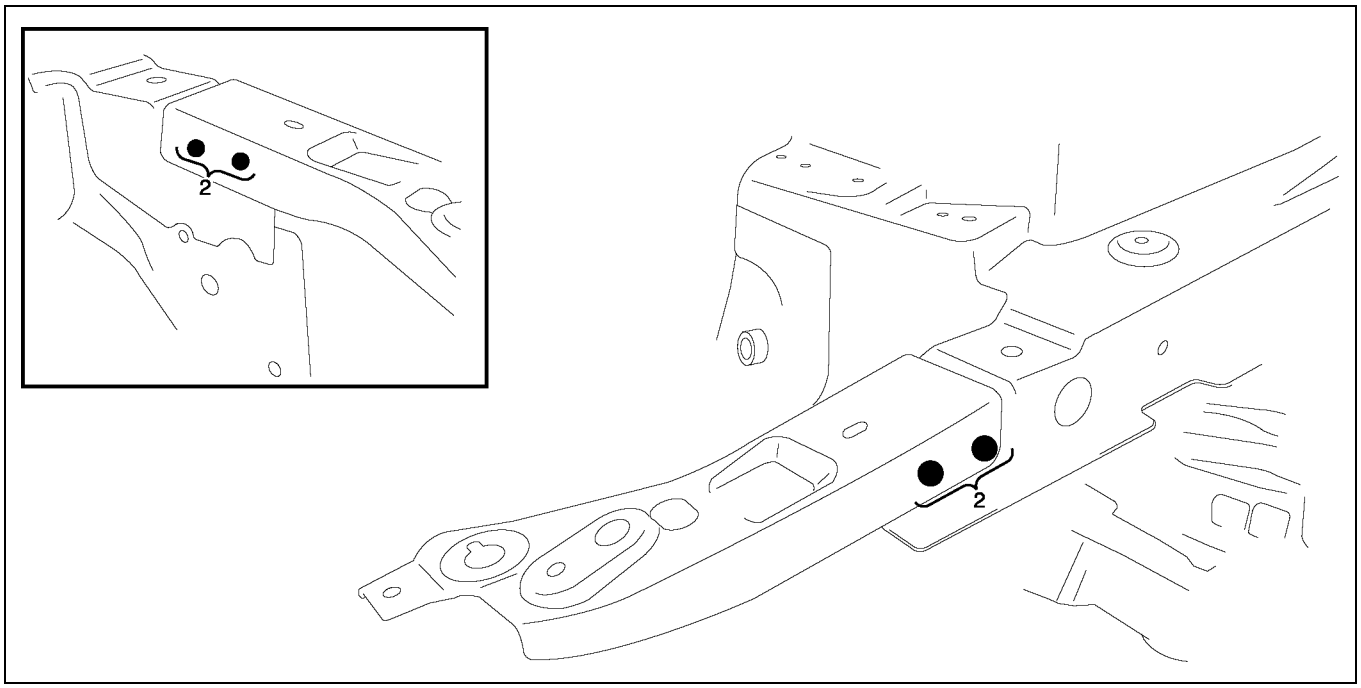

A6E9812B001

SHROUD UPPER RAINFORCEMENT INSTALLATION

A6E981253152B02

1. Drill holes for plug welds before installing new parts.
2. After trial-fitting new parts, make sure the related parts fit properly.

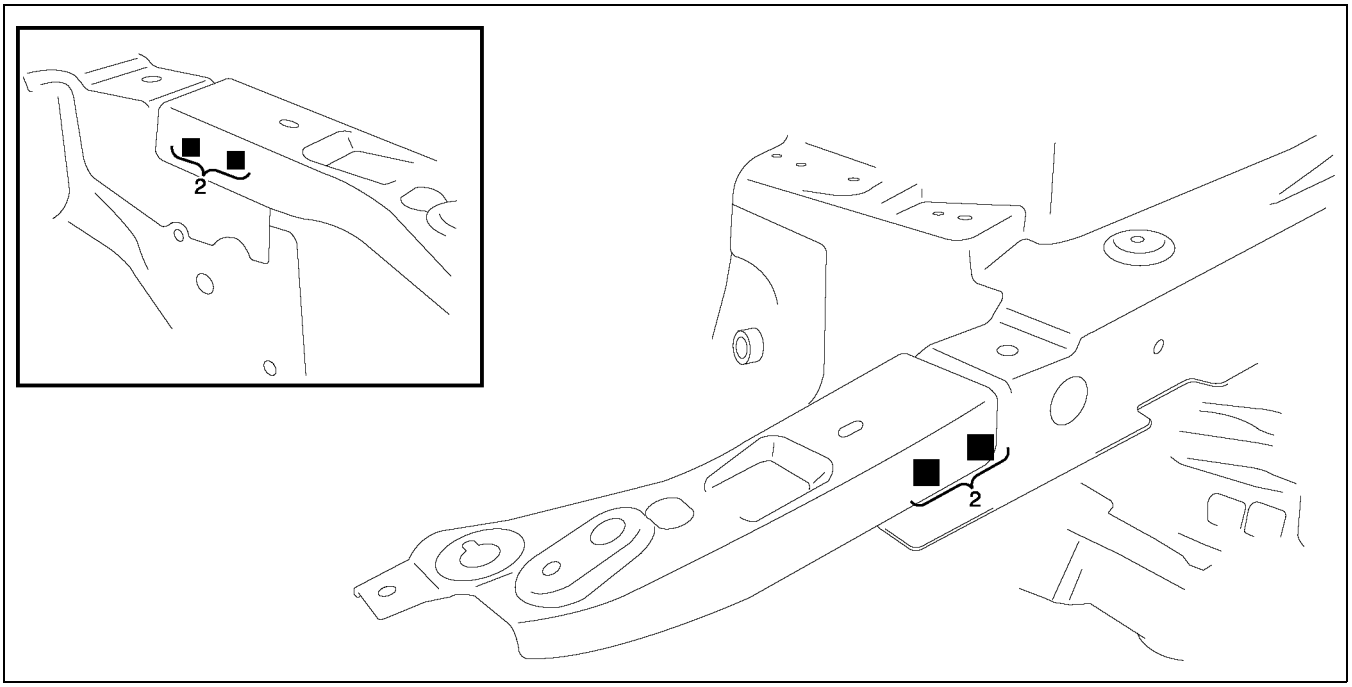

A6E9812B002

COWL SIDE REINFORCEMENT AND COWL UPPER PLATE REMOVAL

A6E981253290B01

1. Remove the cowl side reinforcement.

Note
- The weld locations (B) in the figure indicate the same locations.

Caution
- **Be careful not to damage the windshield when drilling the location indicated by (A).**

2. Remove the cowl upper plate.

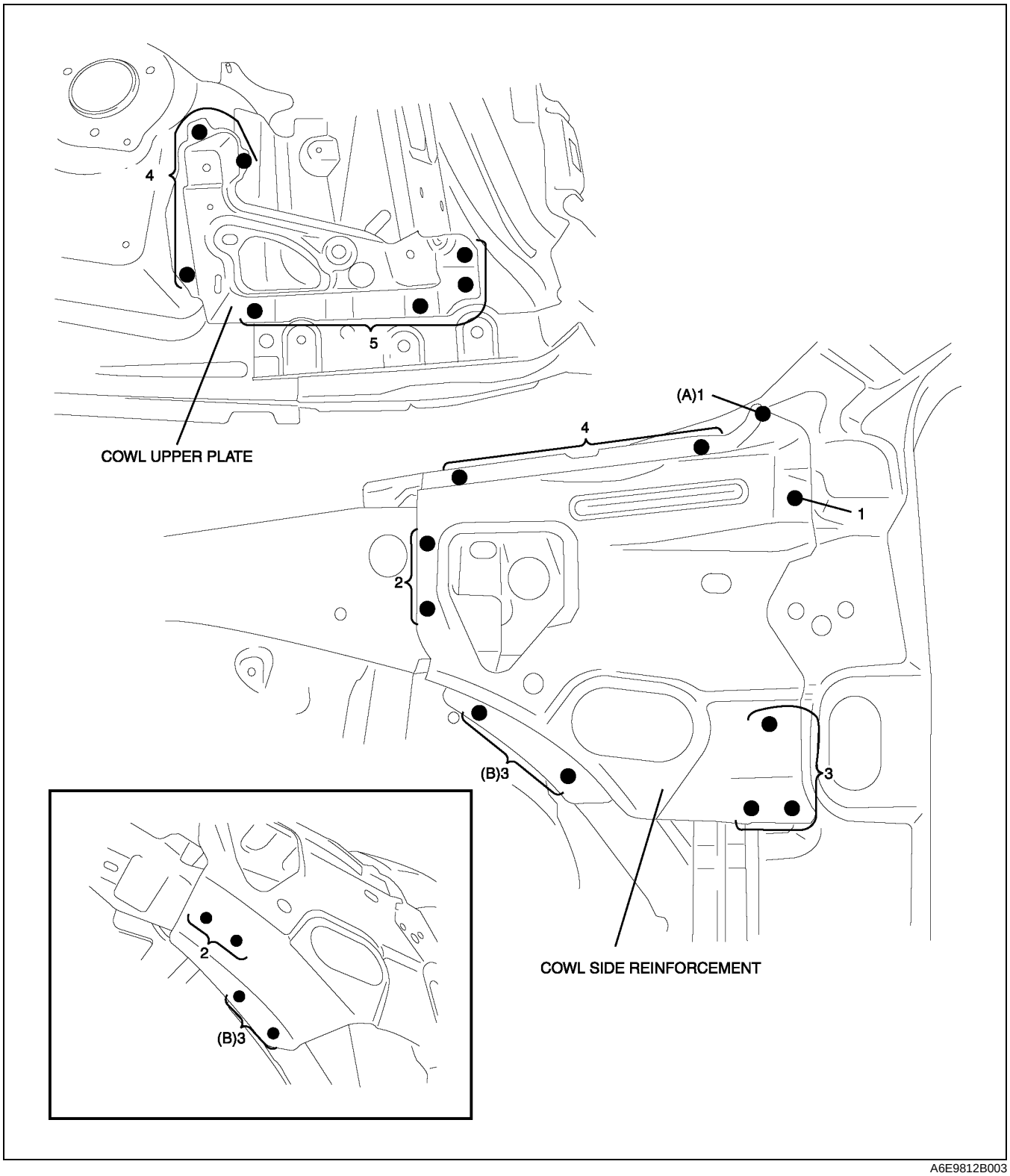

A6E9812B003

COWL SIDE REINFORCEMENT AND COWL UPPER PLATE INSTALLATION

A6E981253290B02

1. When installing new parts, position each part so that the section measurement aligns to the body dimension.
2. Drill holes for plug welds before installing new parts.
3. After trial-fitting new parts, make sure the related parts fit properly.

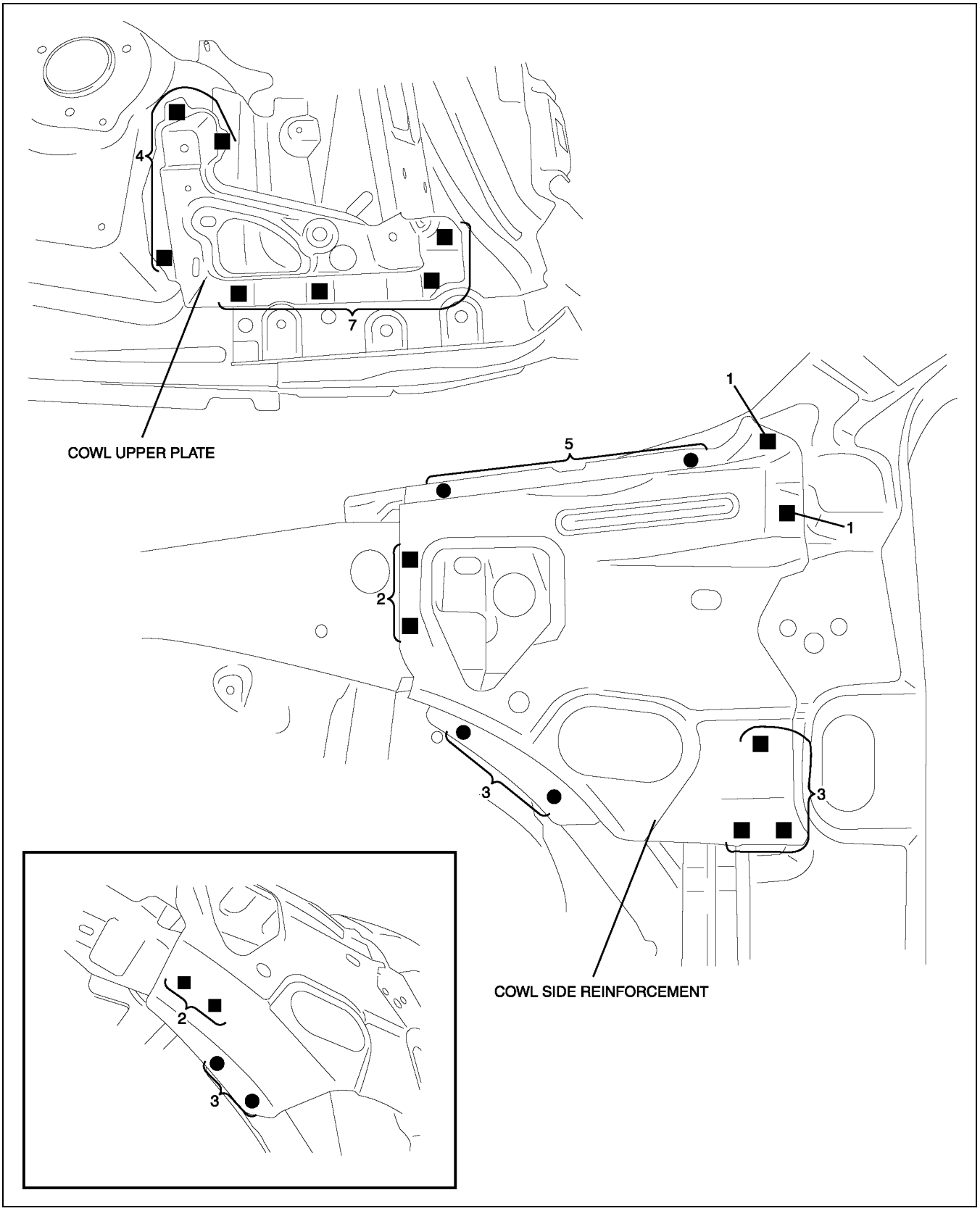

A6E9812B004

APRON REINFORCEMENT ASSEMBLY REMOVAL

A6E981253260B01

1. Rough cut the apron reinforcement upper.
2. Remove the apron reinforcement assembly.

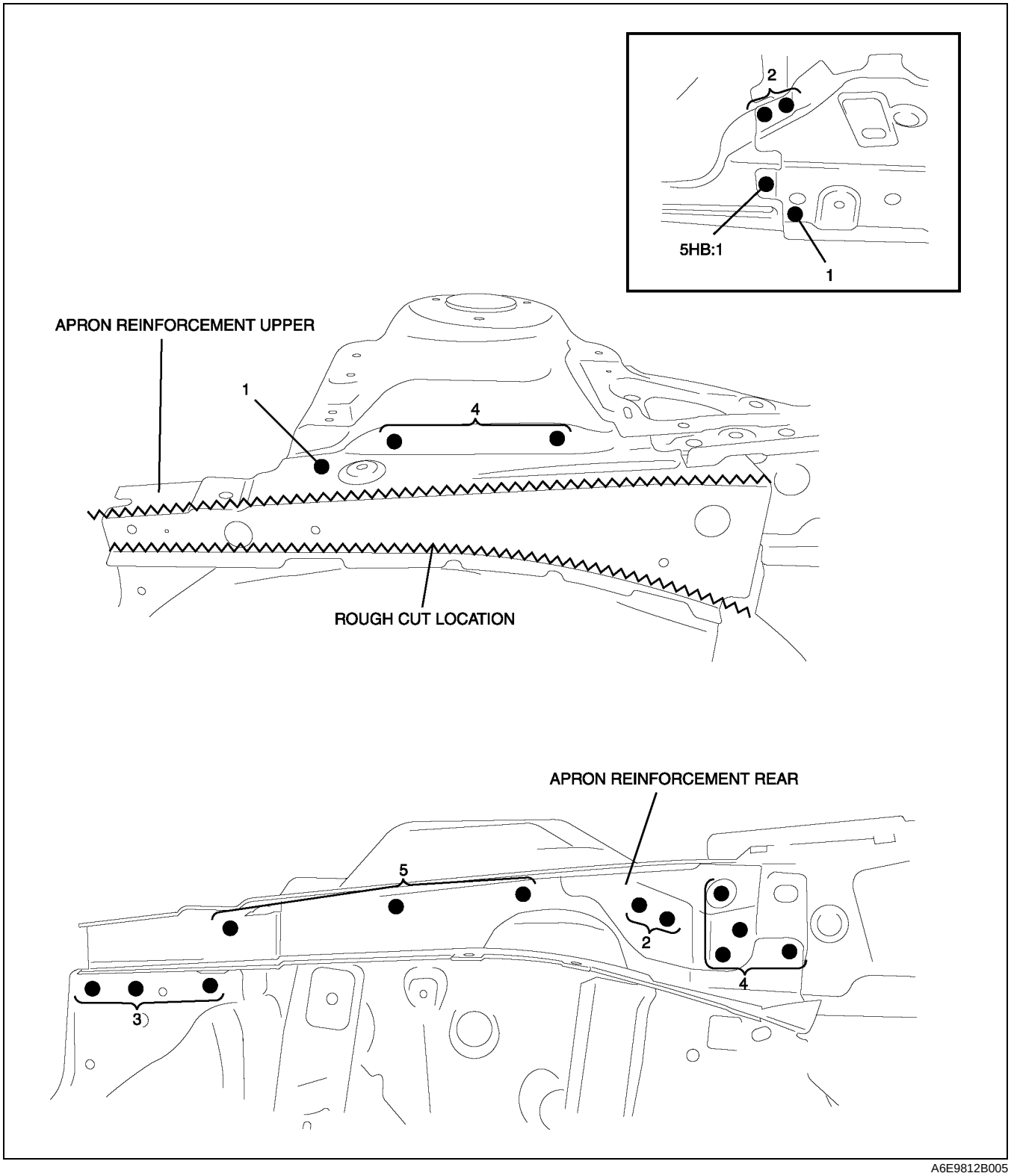

A6E9812B005

APRON REINFORCEMENT ASSEMBLY INSTALLATION

A6E981253260B02

1. When installing new parts, position each part so that the section measurement aligns to the body dimension.
2. Drill holes for plug welds before installing new parts.
3. Install in the following order: apron reinforcement lower,apron reinforcement rear, and apron reinforcement upper.

Note
- After installing, fillet weld in location (A).

Caution
- **When fillet welding, be careful of dripping, melted metal.**

4. After trial-fitting new parts, make sure the related parts fit properly.

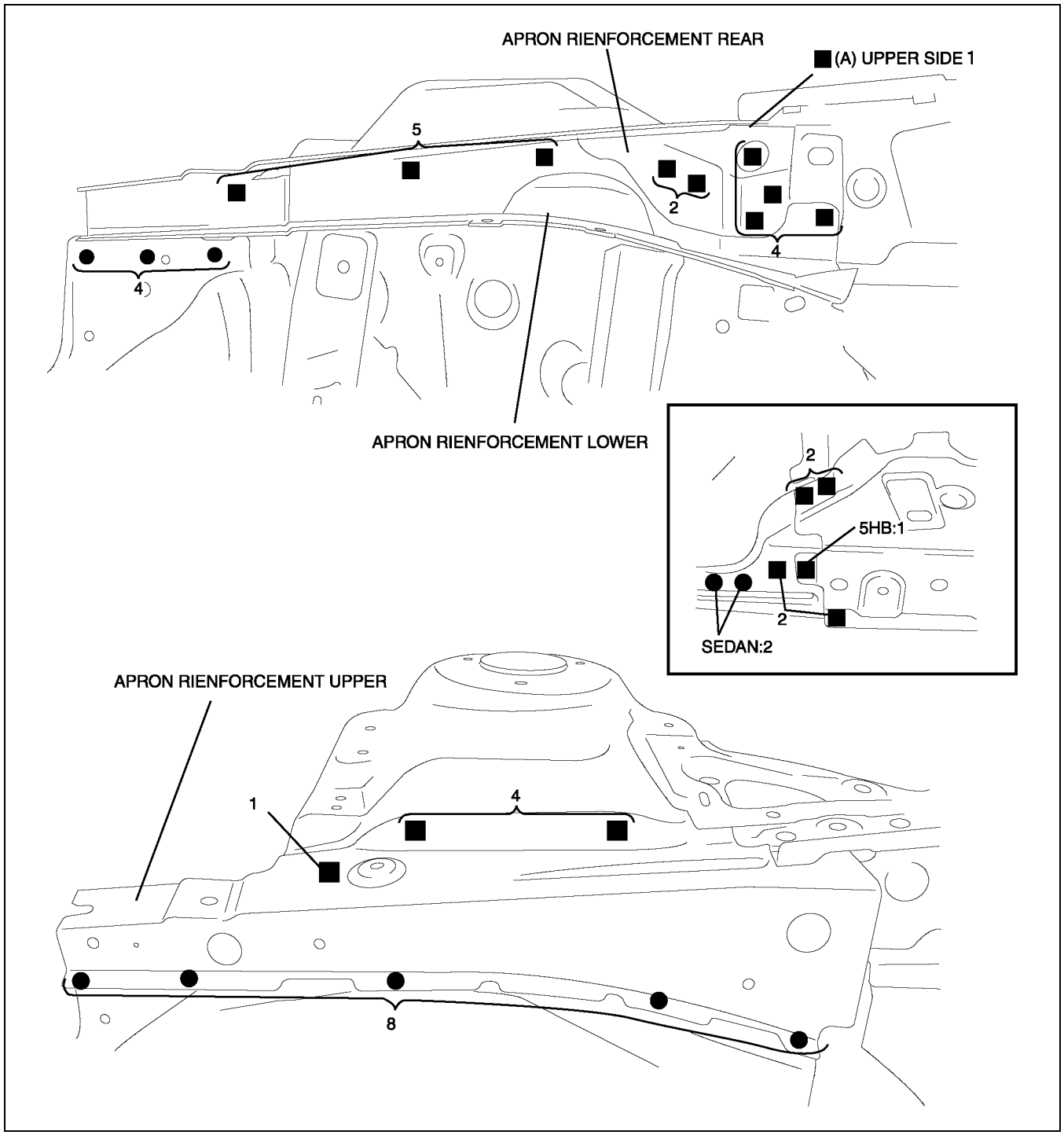

A6E9812B006

WHEEL APRON PANEL ASSEMBLY REMOVAL

A6E981253210B01

1. Drill the 26 weld locations indicated by (A), and 7 weld locations indicated by (B), remove the wheel apron panel assembly.

Note

- If removing the wheel apron panel front and the suspension housing separately as separate parts, drill 7 locations indicated by (B) and drill 6 locations indicated by (C).

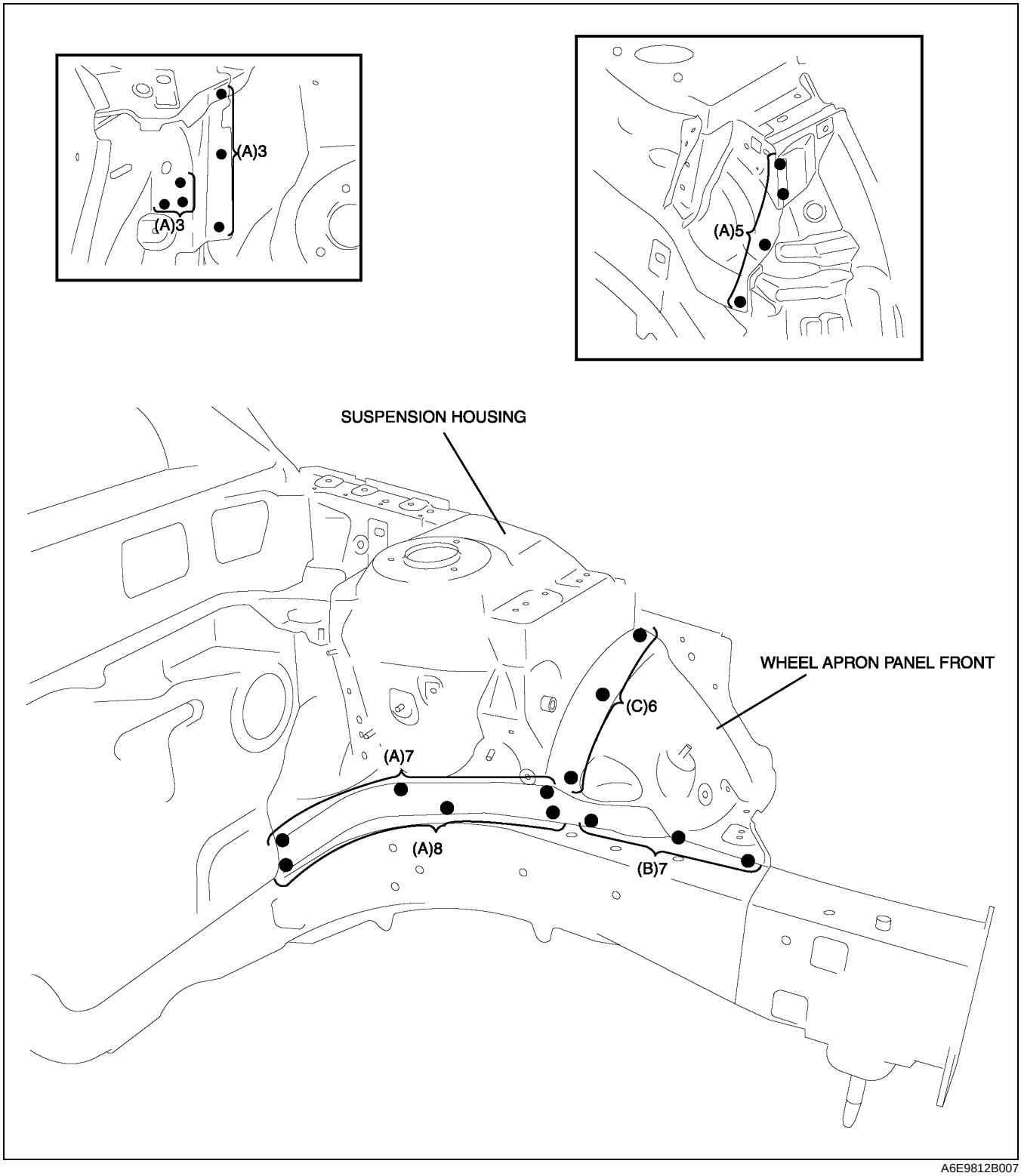

A6E9812B007

WHEEL APRON PANEL ASSEMBLY INSTALLATION

A6E981253210B02

1. When installing new parts, position each part so that the section measurement aligns to the body dimension.
2. Drill holes for plug welds before installing new parts.
3. After trial-fitting new parts, make sure the related parts fit properly.

Note

- When replacing the wheel apron panel front and the suspension housing separately, weld 6 locations indicated by (A).

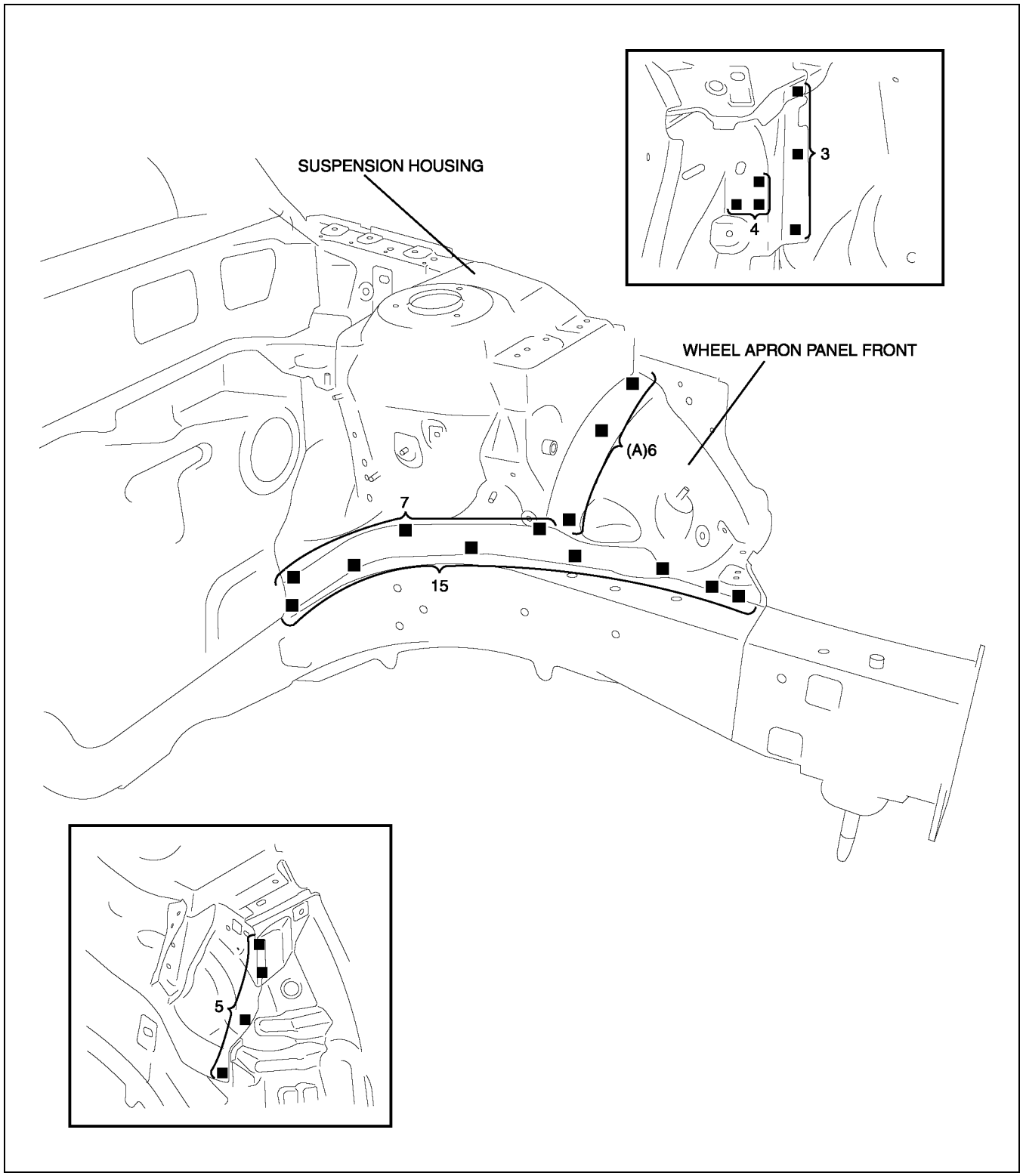

A6E9812B008

FRONT SIDE FRAME REMOVAL

A6E981253300B01

1. Remove the member side.
2. Drill the 1 weld locations indicated by (A), from the room side.
3. Drill the remaining weld locations and remove the front side frame by pulling it.

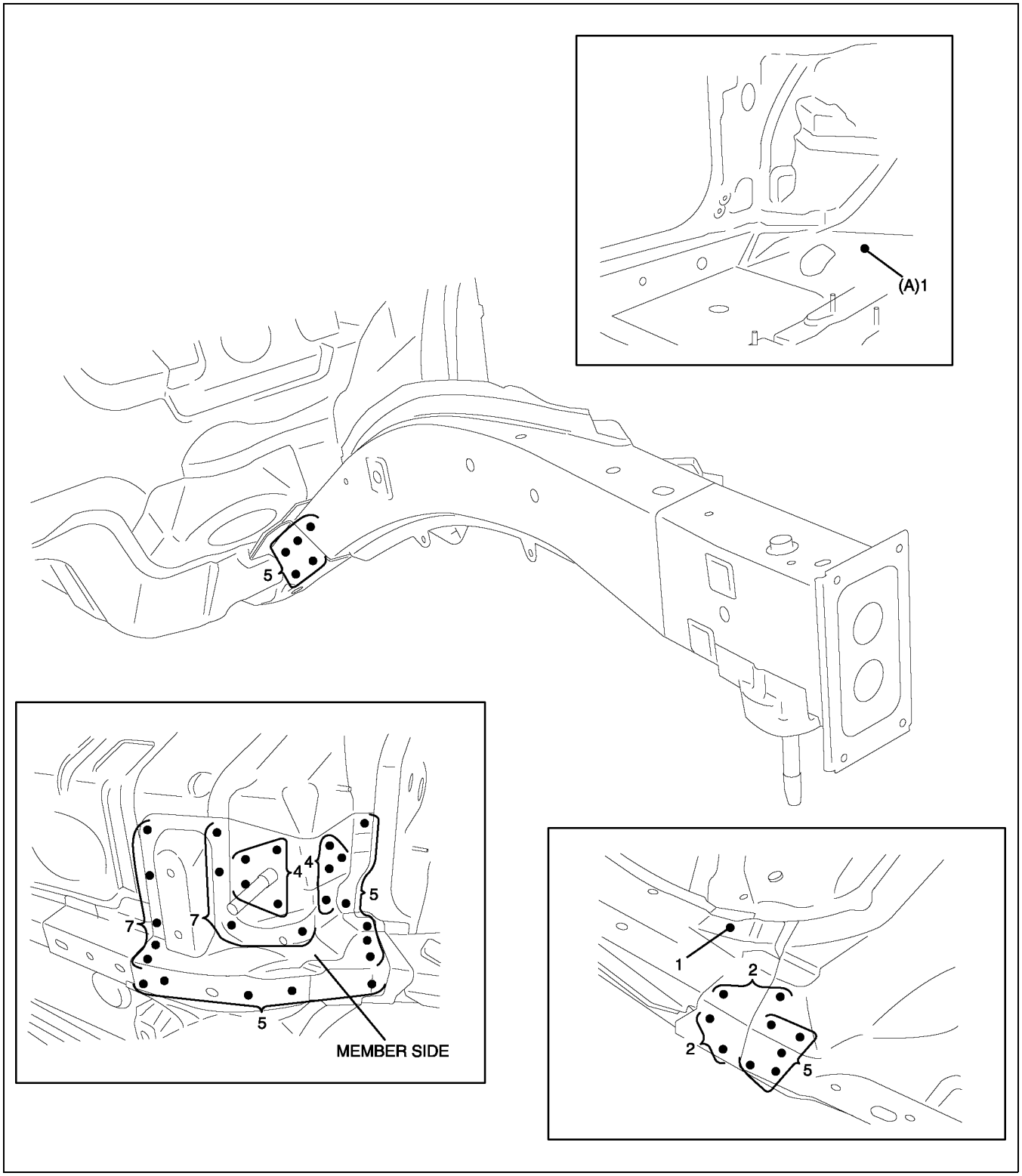

A6E9812B009

FRONT SIDE FRAME INSTALLATION

A6E981253300B02

1. When installing new parts, position each part so that the section measurement aligns to the body dimension.
2. Drill holes for plug welds before installing new parts.
3. After trial-fitting new parts, make sure the related parts fit properly.

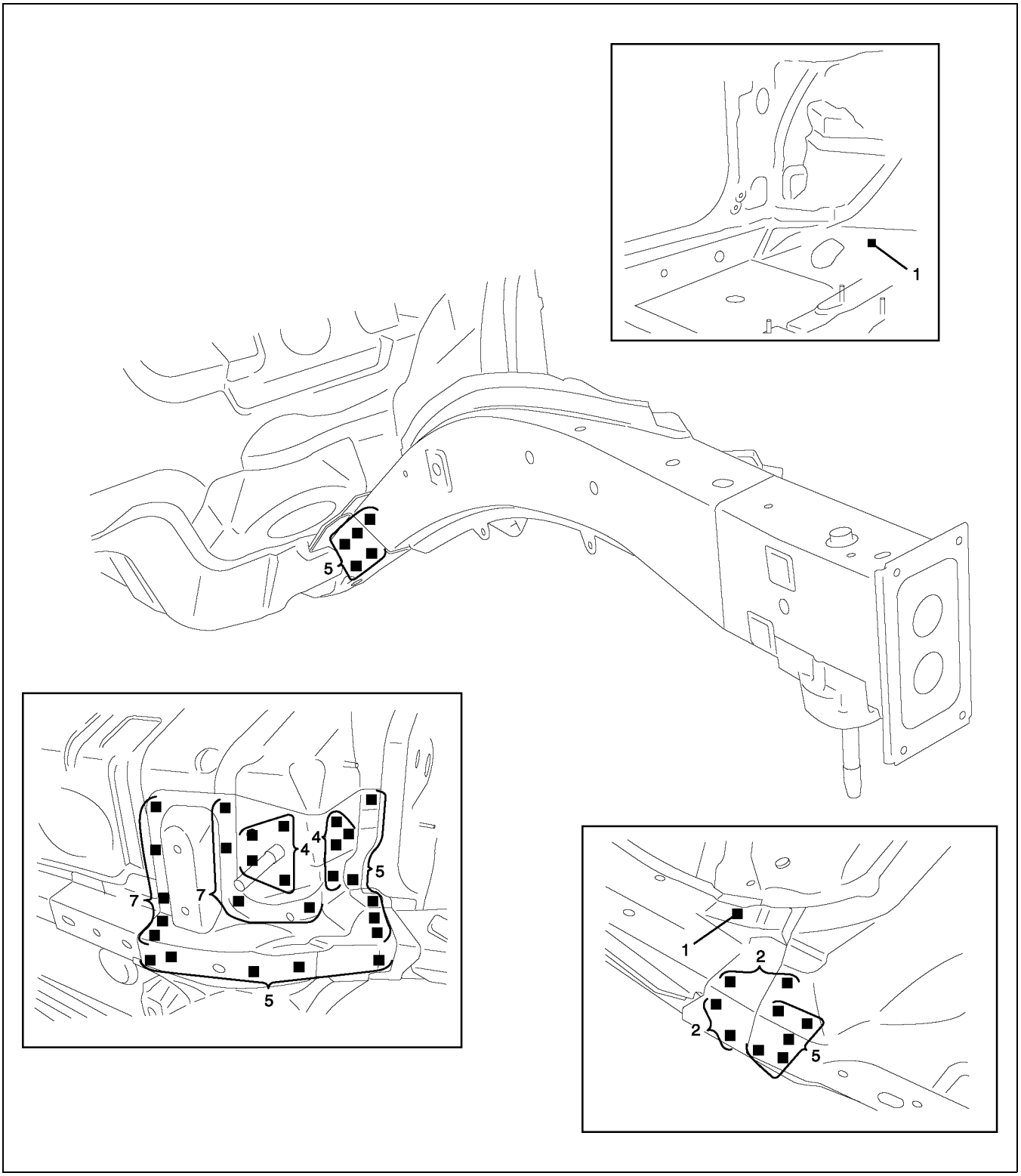

A6E9812B010

FRONT PILLAR REMOVAL

A6E981274090B01

1. Rough cut area (A), drill the 35 weld locations indicated by (B), then remove the lower part of the front pillar outer.
2. Rough cut area (C), drill the 20 weld locations indicated by (D), and 2 weld locations indicated by (E), then remove the front pillar.

Note

- If removing the front pillar reinforcement and the front pillar inner as separate parts, drill 8 locations indicated by (F) and drill 30 locations indicated by (G).

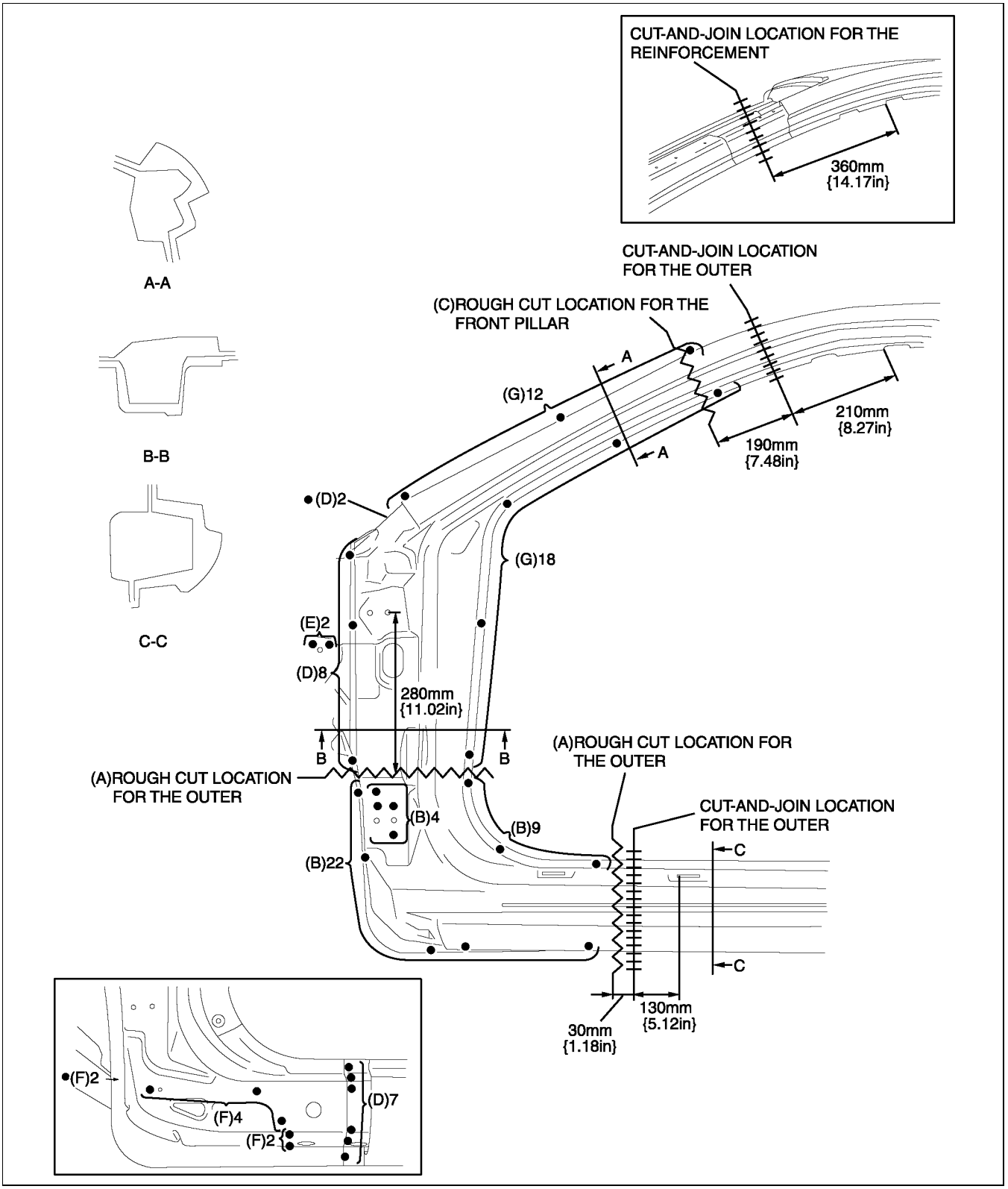

A6E9812B011

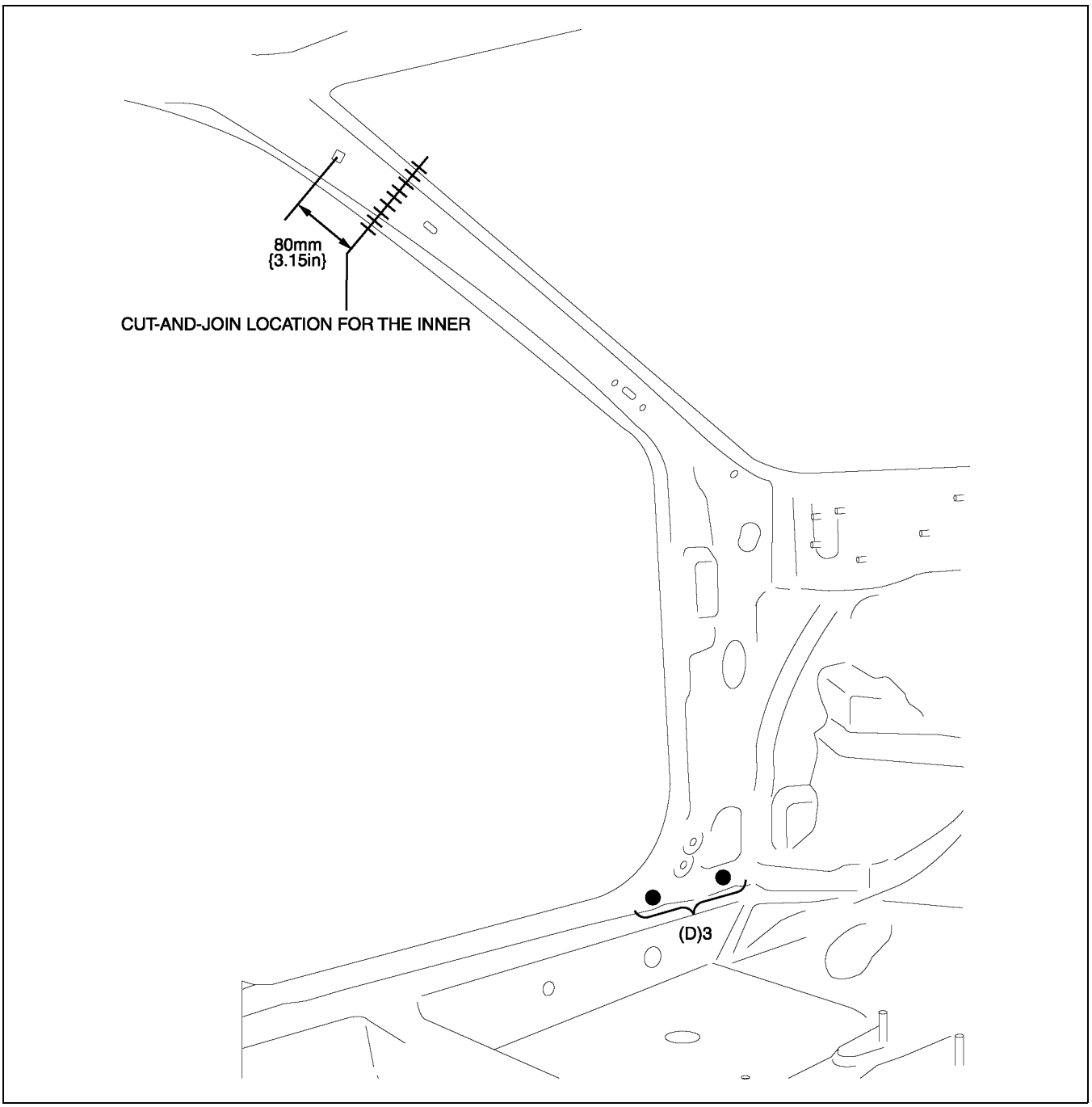

A6E9812B012

FRONT PILLAR INSTALLATION

A6E981274090B02

1. When joining the new and old parts, temporarily install and fit the new part in position, measure each dimension according to the body dimension, then adjust the position to align it to the standard dimensions.
2. Drill holes for plug welds before installing new parts.

Note

- In areas where the outer, reinforcement, inner, etc. are in 3-4 layers, drill holes for plug welds in all but the innermost panel.

3. Weld in 5 locations indicated by (A), then trial-fit the inner and reinforcement.
4. Weld in 10 locations indicated by (B), then install the inner and reinforcement to the existing parts.
5. After trial-fitting new parts, make sure the related parts fit properly.

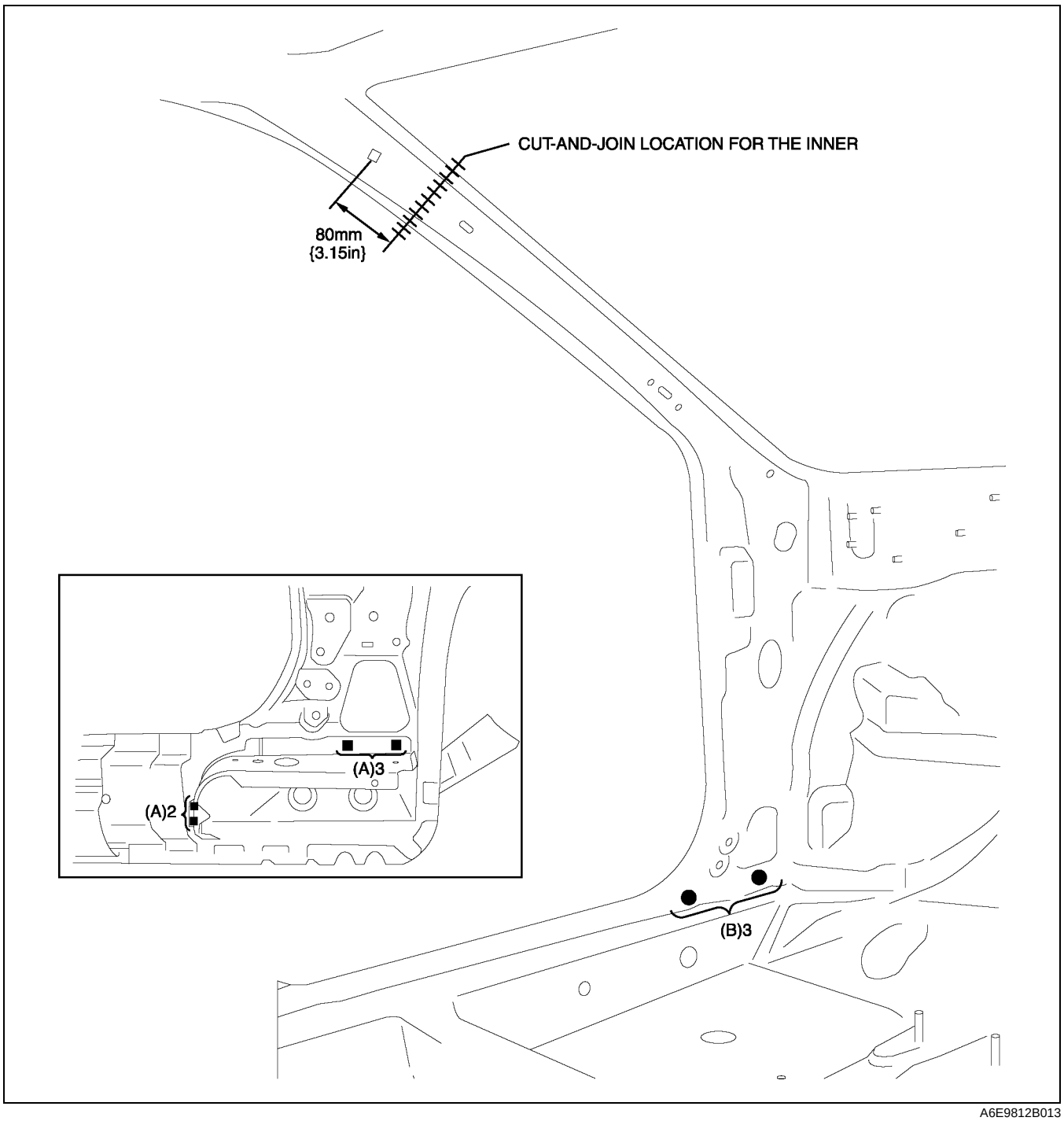

A6E9812B013

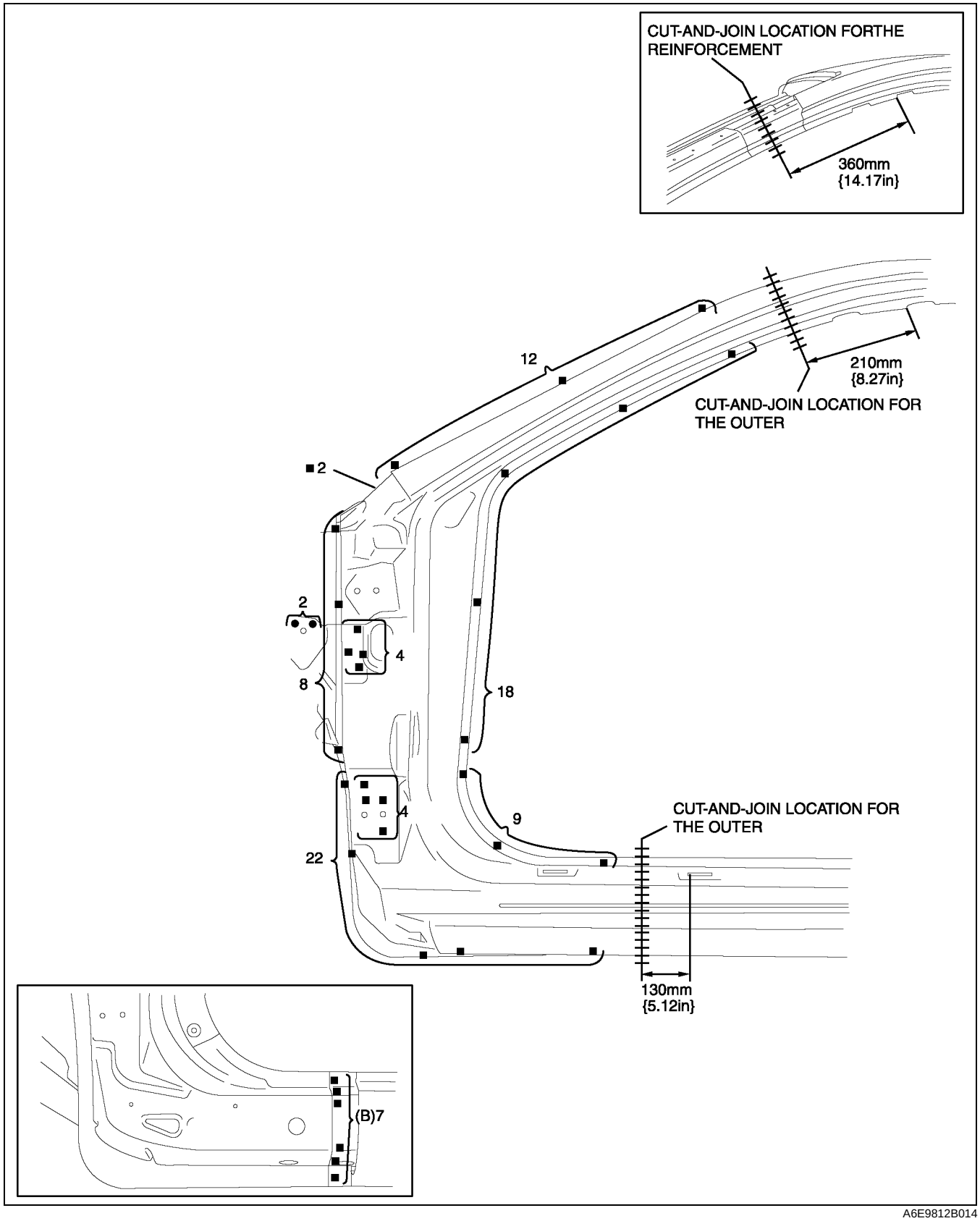

A6E9812B014

CENTER PILLAR REMOVAL

A6E981270350B01

1. Rough cut area (A), drill the 44 weld locations indicated by (B), then remove the lower part of the center pillar outer.
2. Rough cut area (C), drill the 20 weld locations indicated by (D), then remove the center pillar outer.
3. Drill the 2 weld locations indicated by (E) and remove the B-pillar reinforcement.

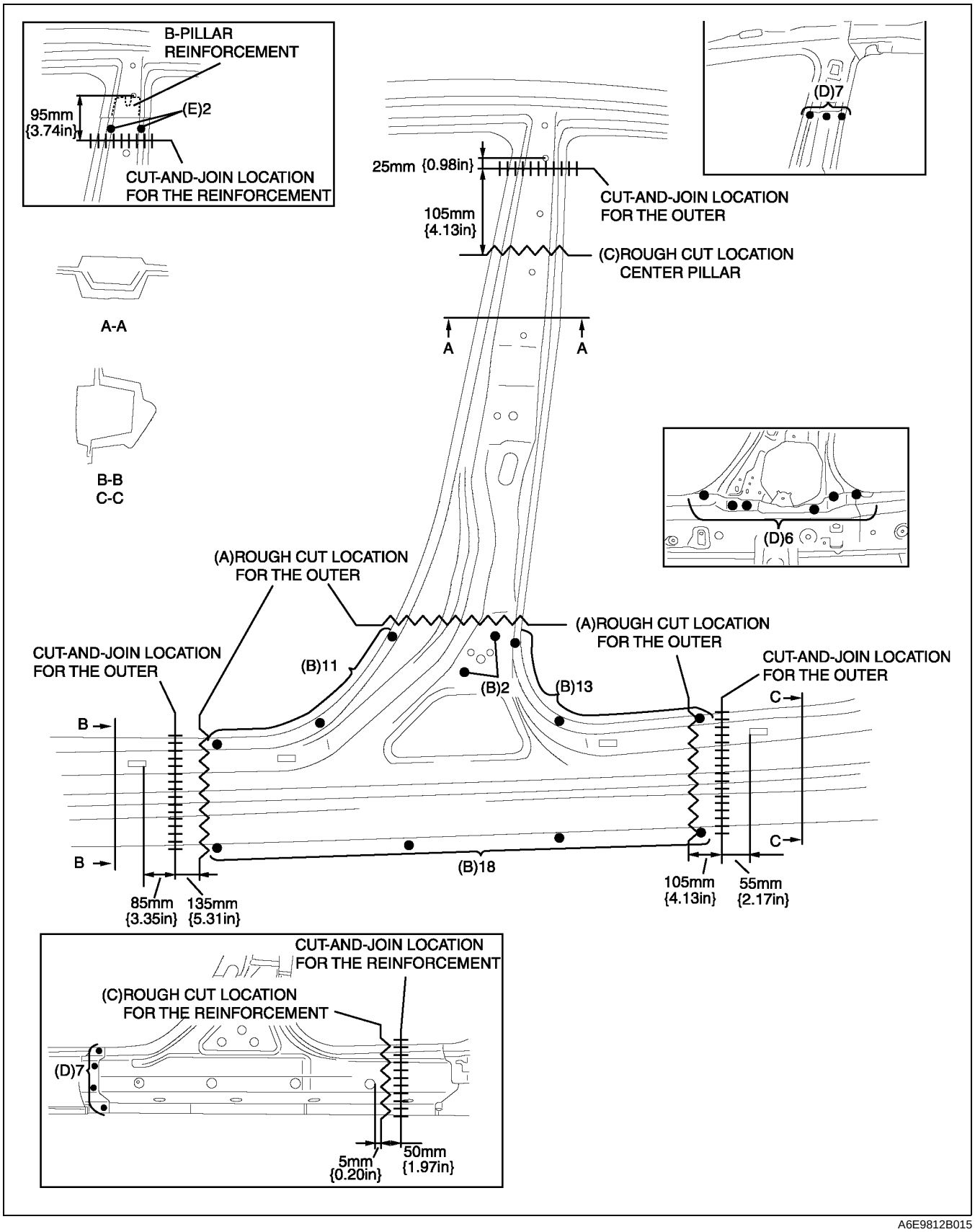

A6E9812B015

CENTER PILLAR INSTALLATION

A6E981270350B02

1. When joining the new and old parts, temporarily install and fit the new part in position, measure each dimension according to the body dimension, then adjust the position to align it to the standard dimensions.
2. Drill holes for plug welds before installing new parts.

Note

- In areas where the outer, reinforcement, inner, etc. are in 3-4 layers, drill holes for plug welds in all but the innermost panel.

Warning

- **When cutting and joining the reinforcement, make sure not to damage or scratch the B-pillar reinforcement.**

3. Install in the following order: inner, reinforcement, and outer.
4. After trial-fitting new parts, make sure the related parts fit properly.

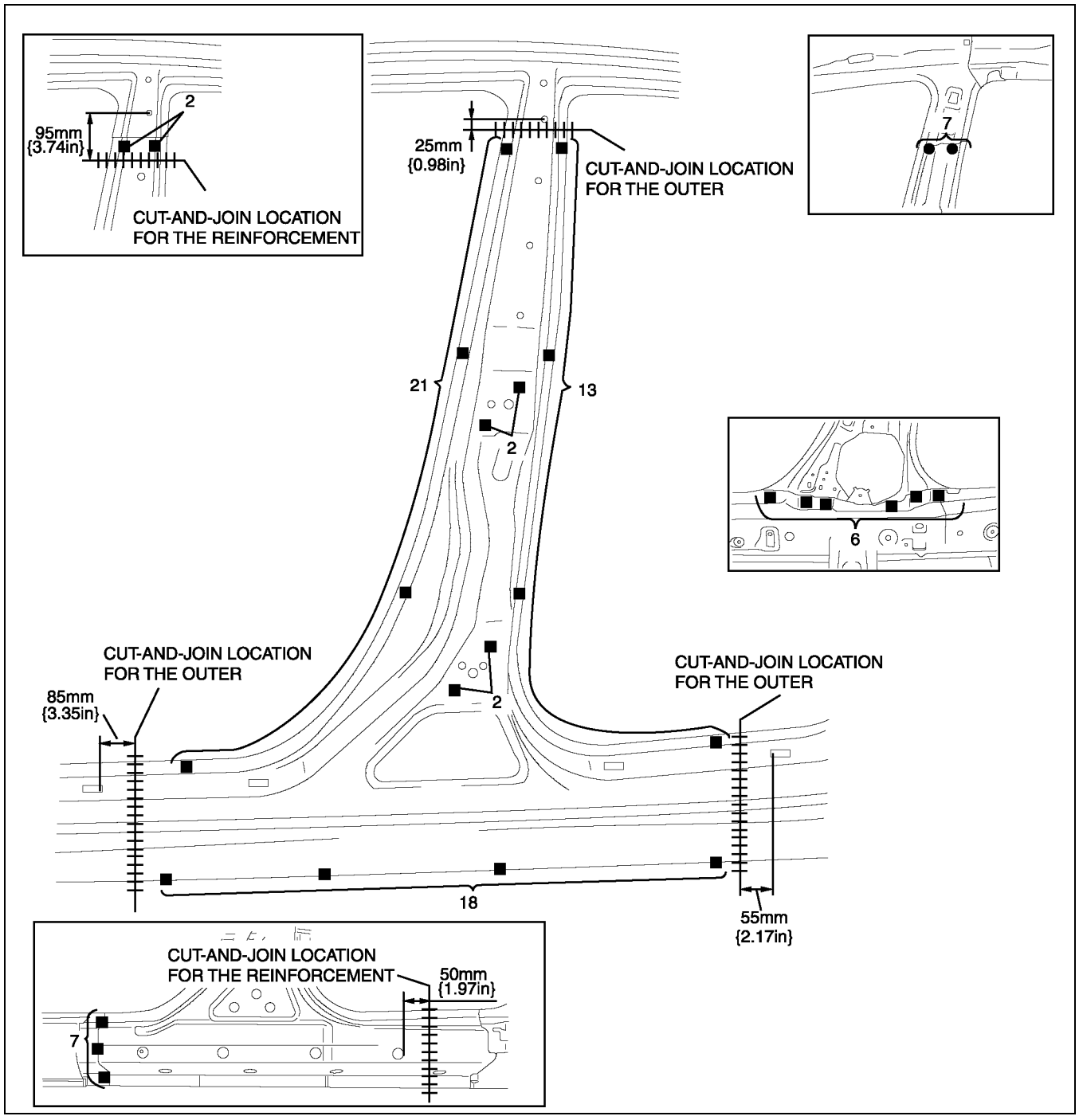

A6E9812B016

REAR FENDER PANEL REMOVAL

A6E981274100B01

SEDAN

Caution

- **Avoid cutting with a blowtorch or similar tools as the insulator (shaded area) is flammable.**

1. The rear fender panel and the rear pillar inner are joined with glue at the wheel arch line. Use a chisel or other to separate the rear fender panel from the rear pillar inner, then remove the rear fender panel.

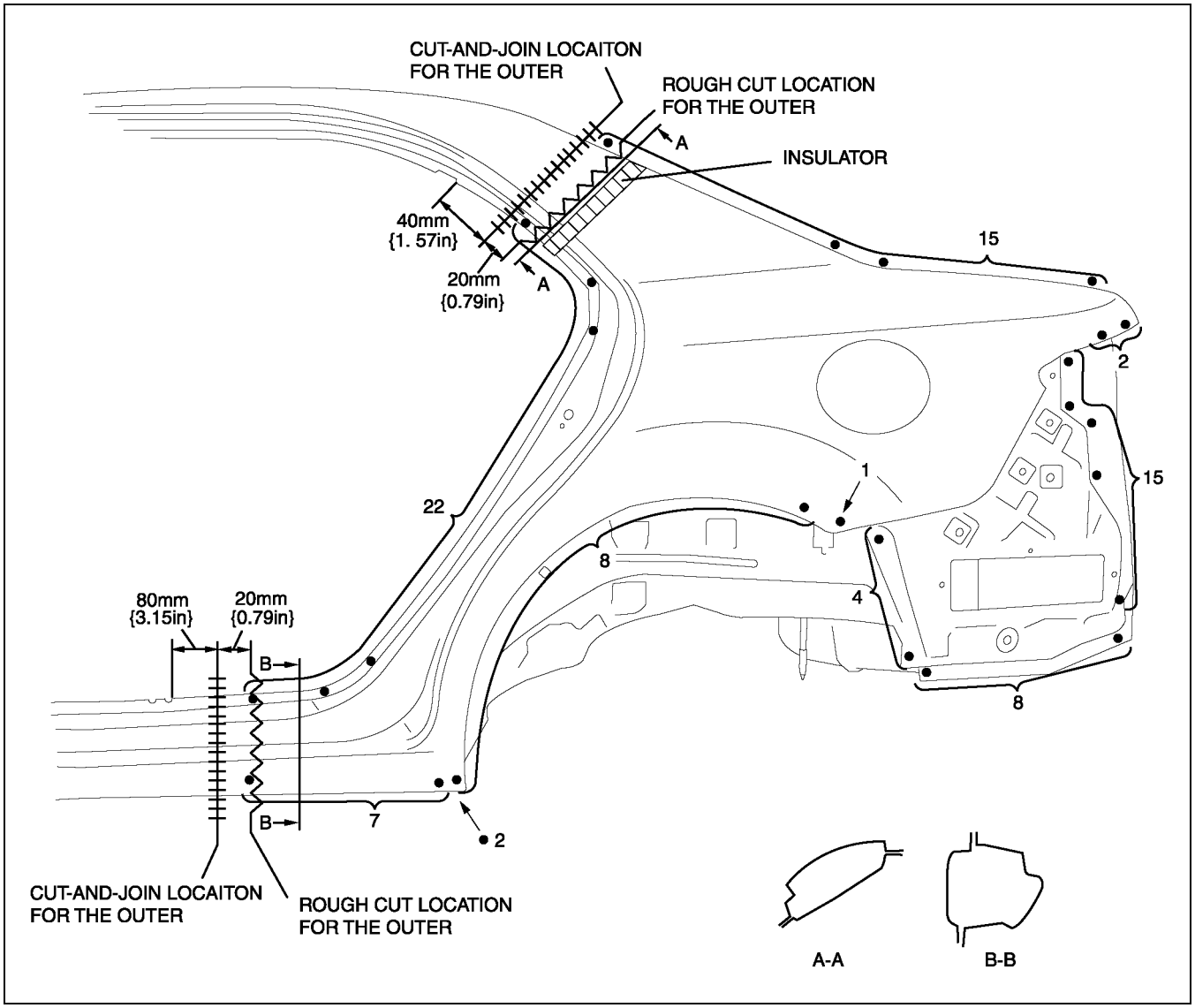

A6E9812B017

5HB

Caution
- **Avoid cutting with a blowtorch or similar tools as the insulator (shaded area) is flammable.**

1. The rear fender panel and the rear pillar inner are joined with glue at the wheel arch line. Use a chisel or other to separate the rear fender panel from the rear pillar inner, then remove the rear fender panel.

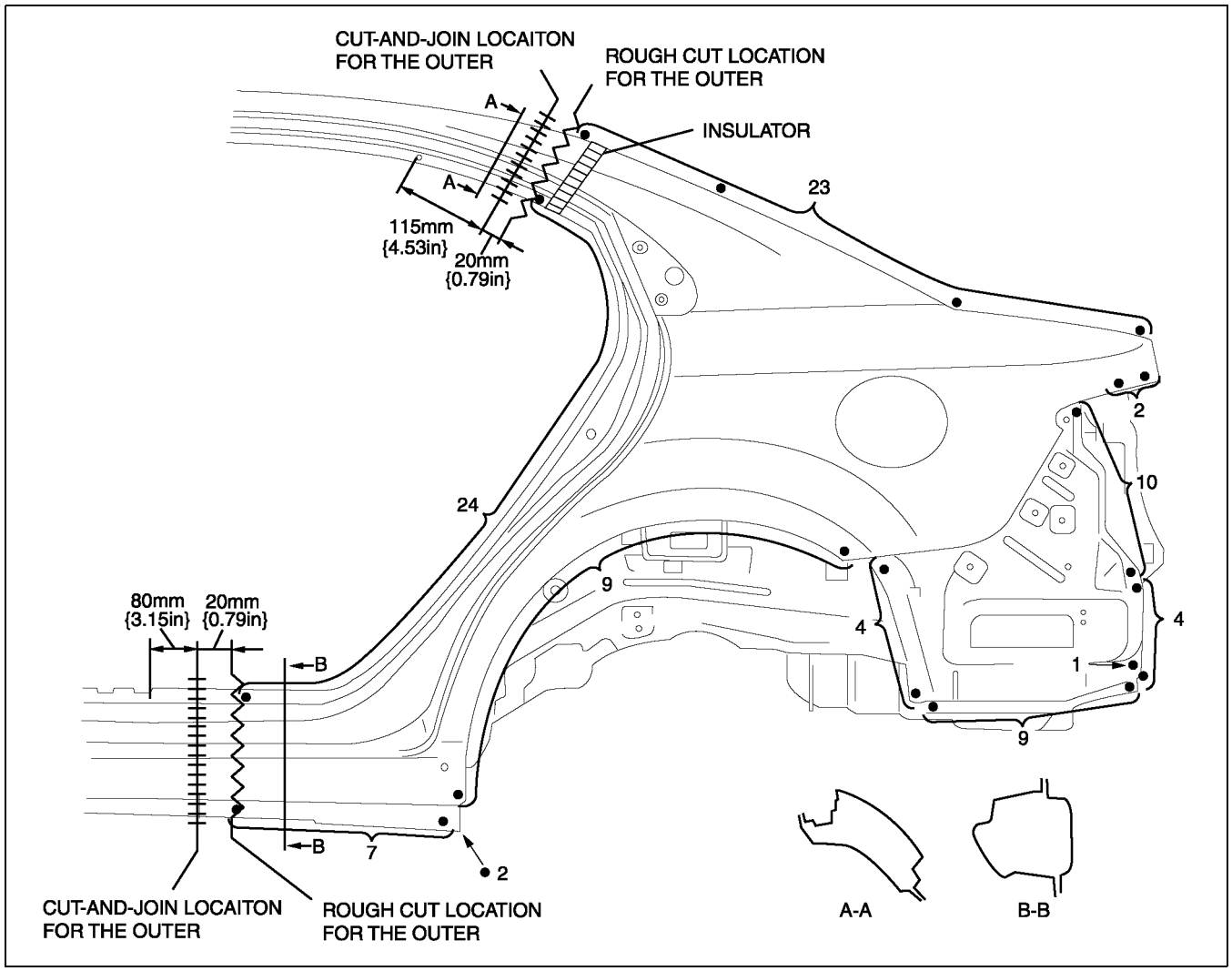

A6E9812B018

REAR FENDER PANEL INSTALLATION

A6E981274100B02

SEDAN

1. When joining the new and old parts, temporarily install and fit the new part in position, measure each dimension according to the body dimension, then adjust the position to align it to the standard dimensions.
2. Drill holes for plug welds before installing new parts.
3. Before installing new parts, apply spot weld sealer to the wheel arch line.
4. After trial-fitting new parts, make sure the related parts fit properly.

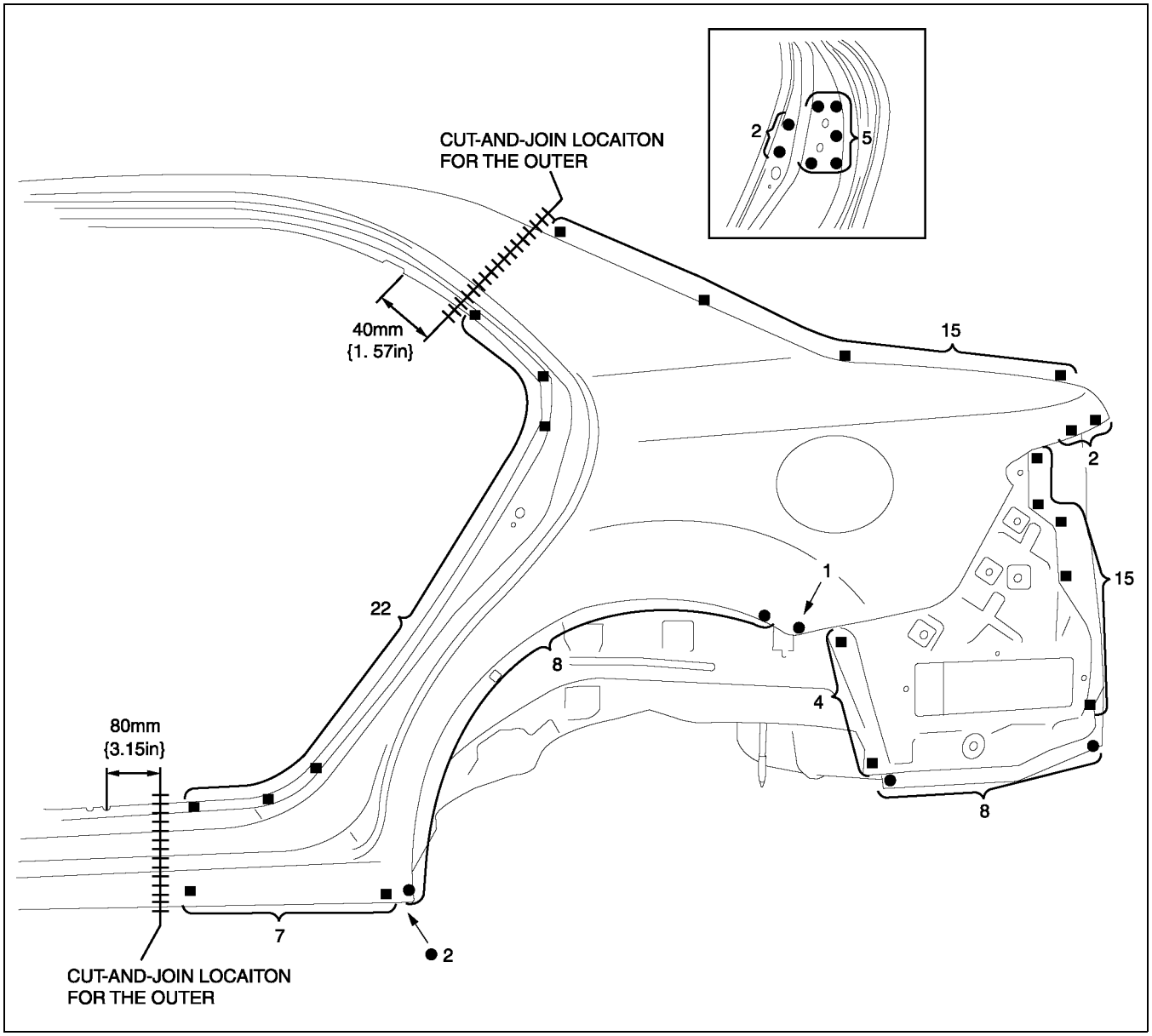

A6E9812B019

5HB

1. When joining the new and old parts, temporarily install and fit the new part in position, measure each dimension according to the body dimension, then adjust the position to align it to the standard dimensions.
2. Drill holes for plug welds before installing new parts.
3. Before installing new parts, apply spot weld sealer to the wheel arch line.
4. After trial-fitting new parts, make sure the related parts fit properly.

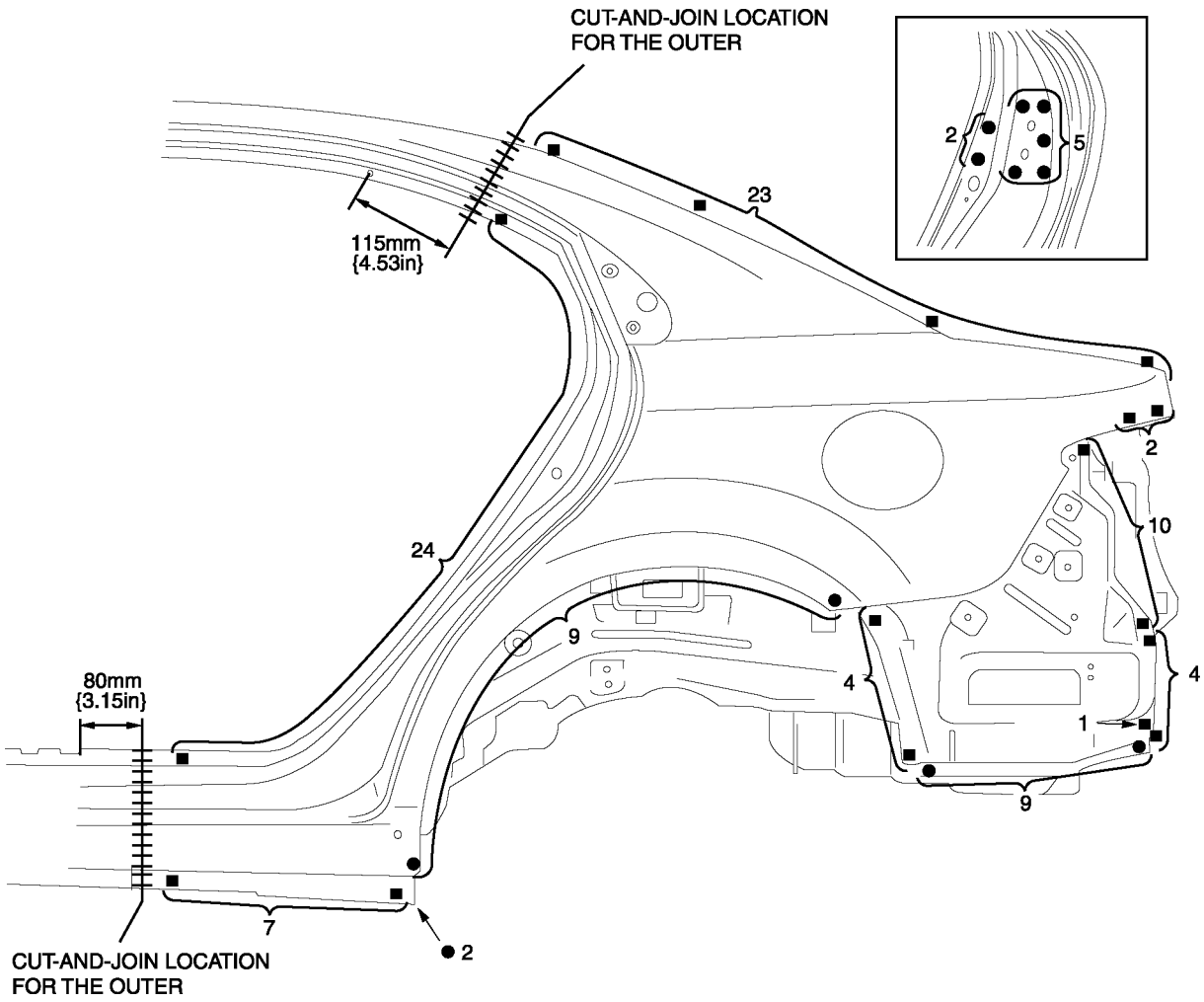

A6E9812B020

SIDE SILL PANEL REMOVAL

A6E981270270B01

1. Remove the side sill panel.
2. Drill the 3 weld locations indicated by (A), from the room side.
3. Remove the side sill reinforcement.

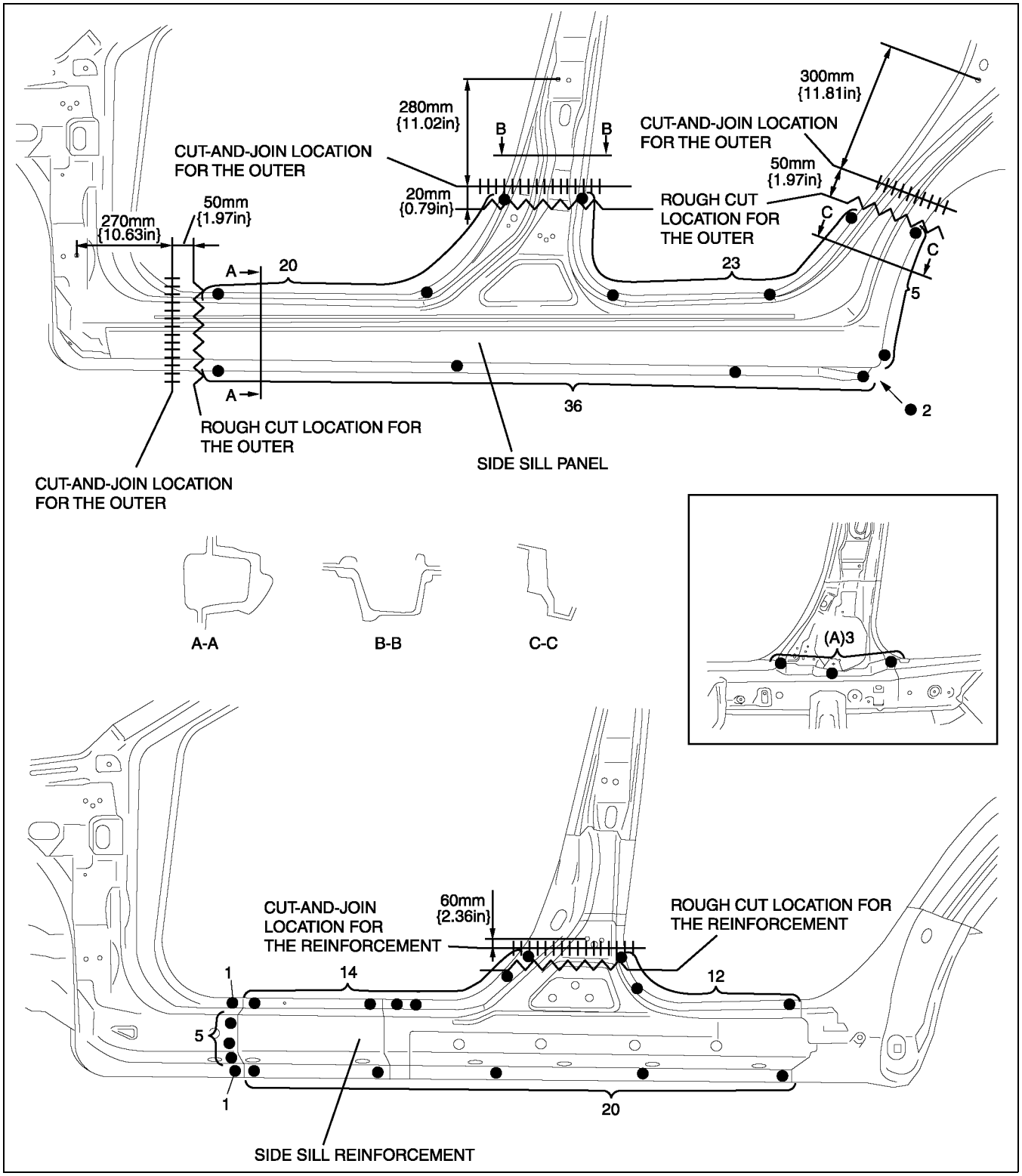

A6E9812B021

SIDE SILL PANEL INSTALLATION

A6E981270270B02

1. When joining the new and old parts, temporarily install and fit the new part in position, measure each dimension according to the body dimension, then adjust the position to align it to the standard dimensions.
2. Drill holes for plug welds before installing new parts.
3. Plug welding of 59 weld locations indicated by (A), during installation of the side sill panel.
4. After trial-fitting new parts, make sure the related parts fit properly.

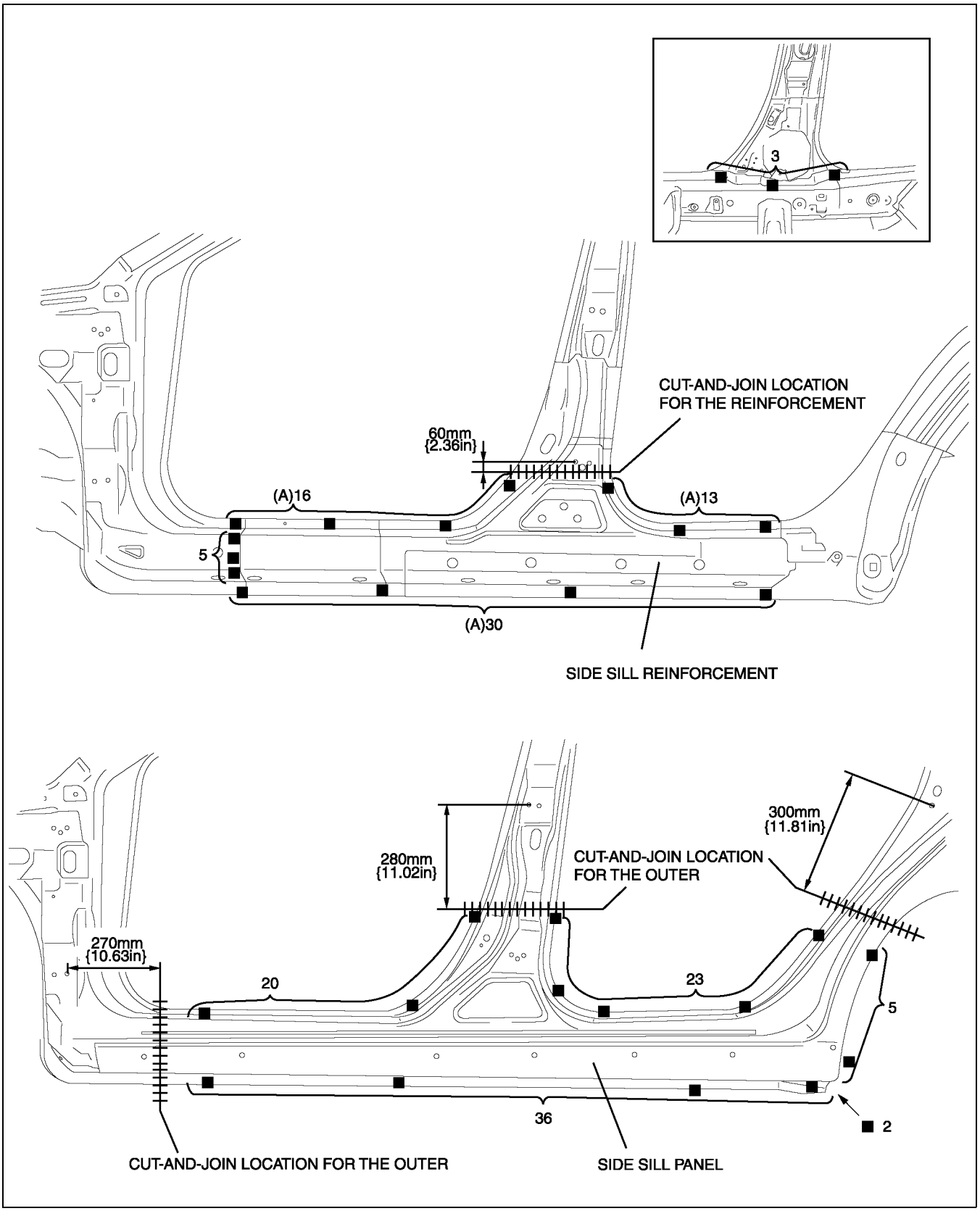

A6E9812B022

REAR END PANEL REMOVAL

A6E981270750B01

SEDAN

1. Remove the rear end panel.

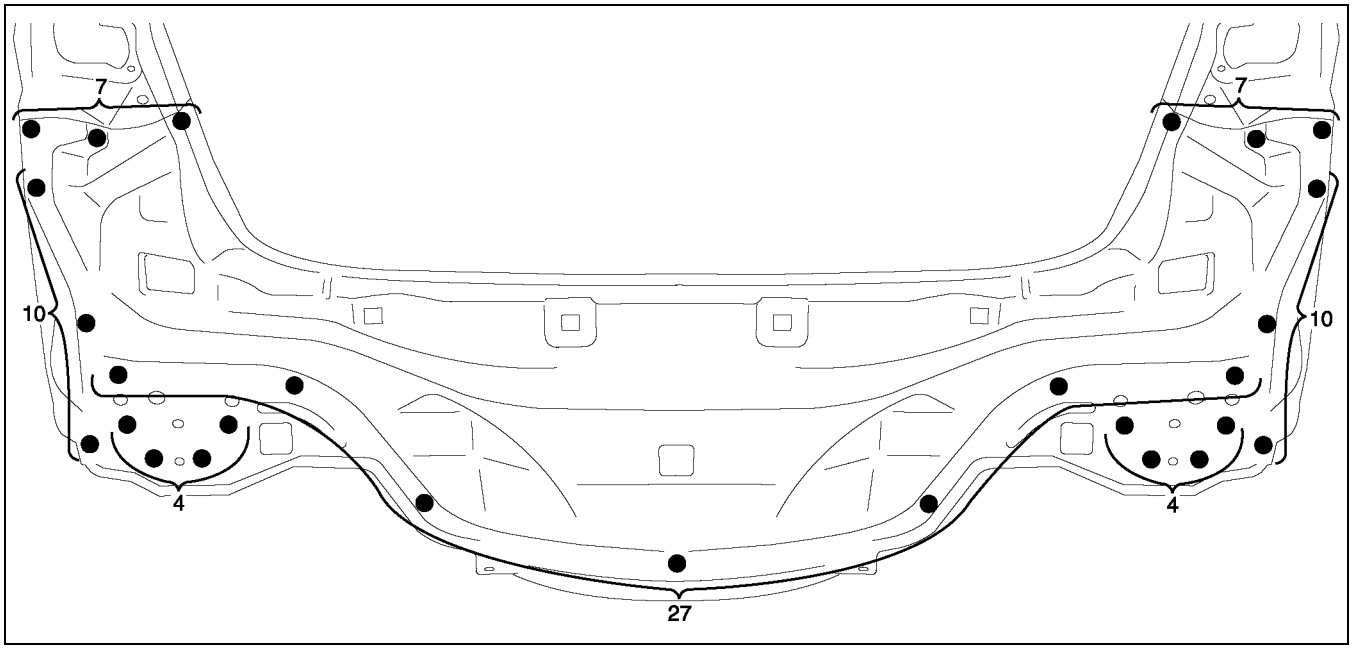

A6E9812B023

5HB

1. Drill the 2 weld locations indicated by (A), from the room side.
2. Remove the rear end panel.

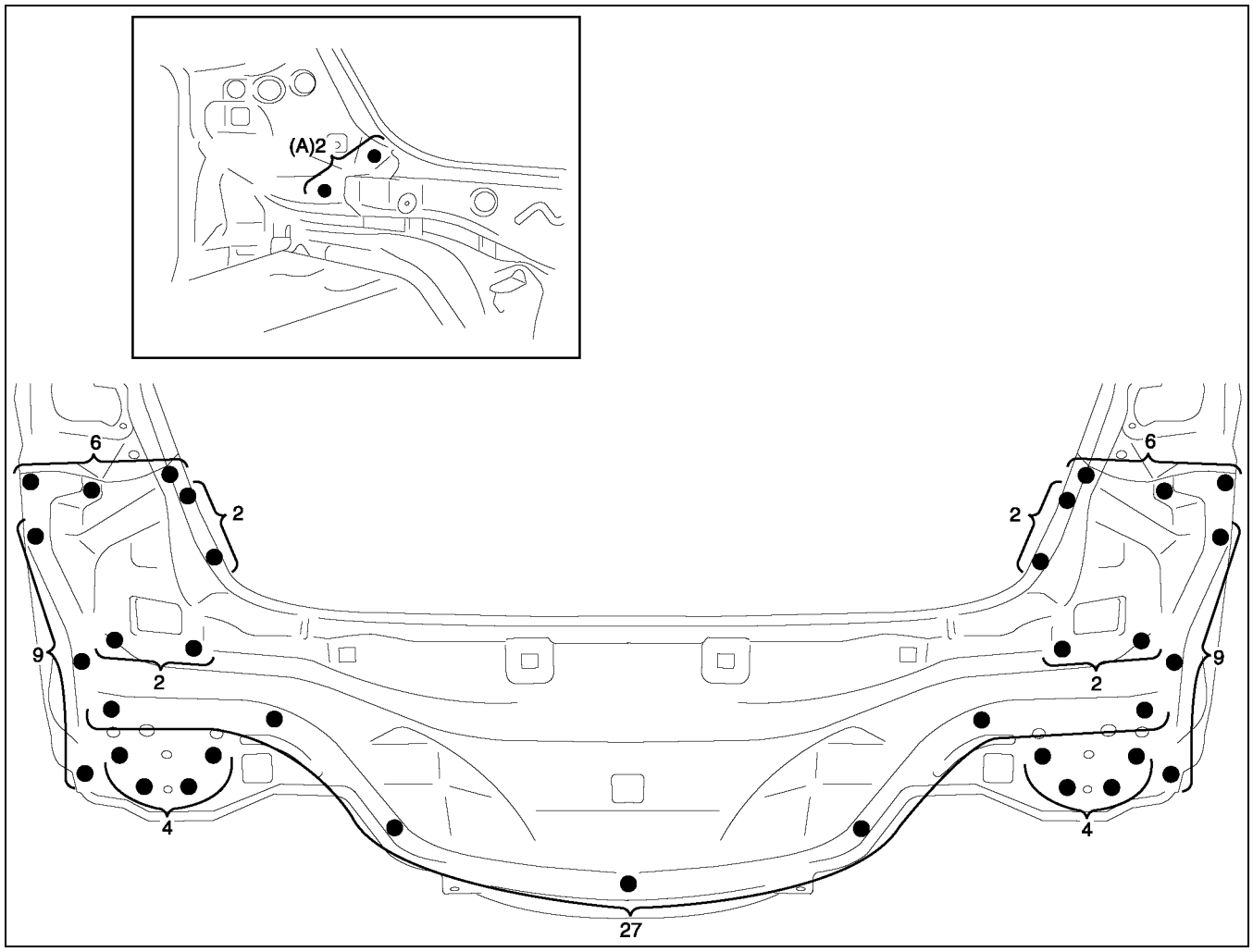

A6E9812B025

REAR END PANEL INSTALLATION

A6E981270750B02

SEDAN

1. When installing new parts, position each part so that the section measurement aligns to the body dimension.
2. Drill holes for plug welds before installing new parts.
3. After trial-fitting new parts, make sure the related parts fit properly.

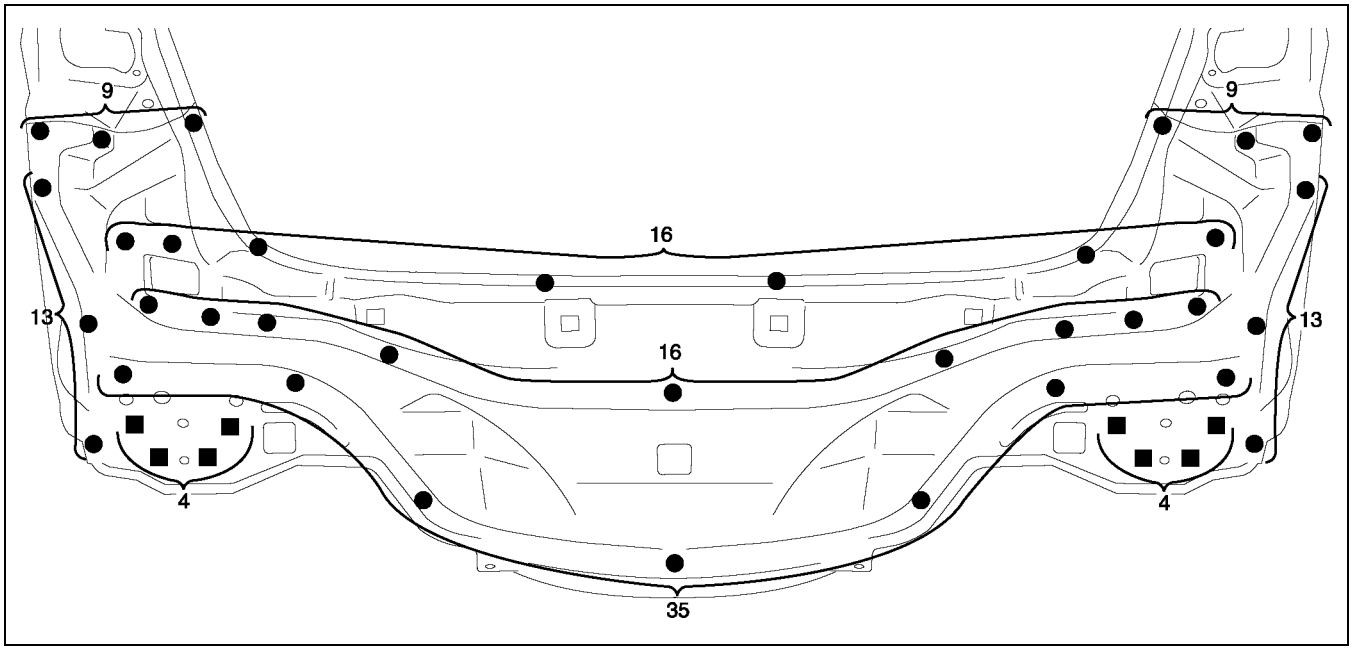

A6E9812B024

5HB

1. When installing new parts, position each part so that the section measurement aligns to the body dimension.
2. Drill holes for plug welds before installing new parts.
3. After trial-fitting new parts, make sure the related parts fit properly.

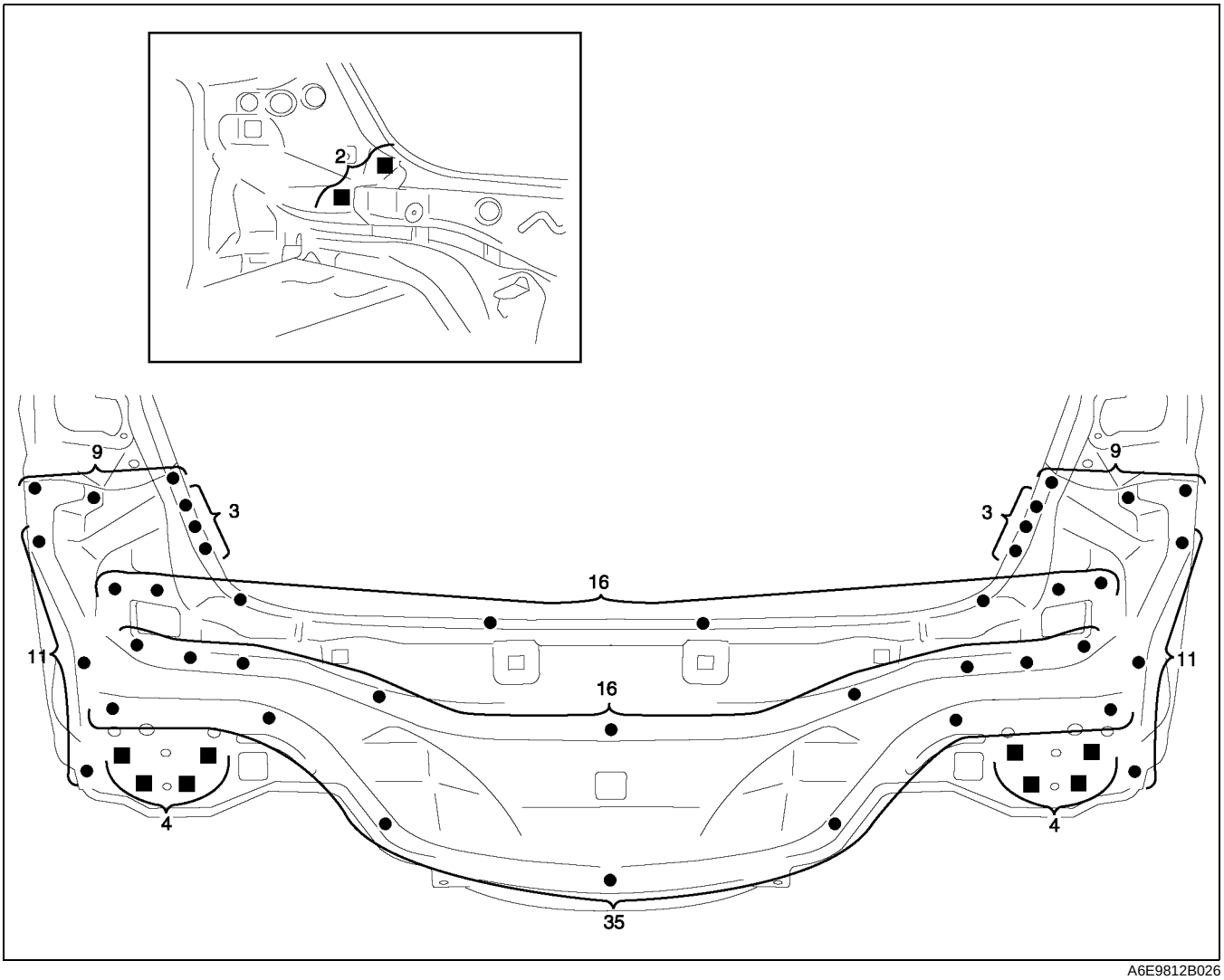

A6E9812B026

REAR FENDER RAIN RAIL AND CORNER PLATE REMOVAL

A6E981270440B01

SEDAN

1. Remove the rear fender rein rail and corner plate.

Note

- When removing the rear fender rain rail and the corner plate separately, drill 3 locations indicated by (A).

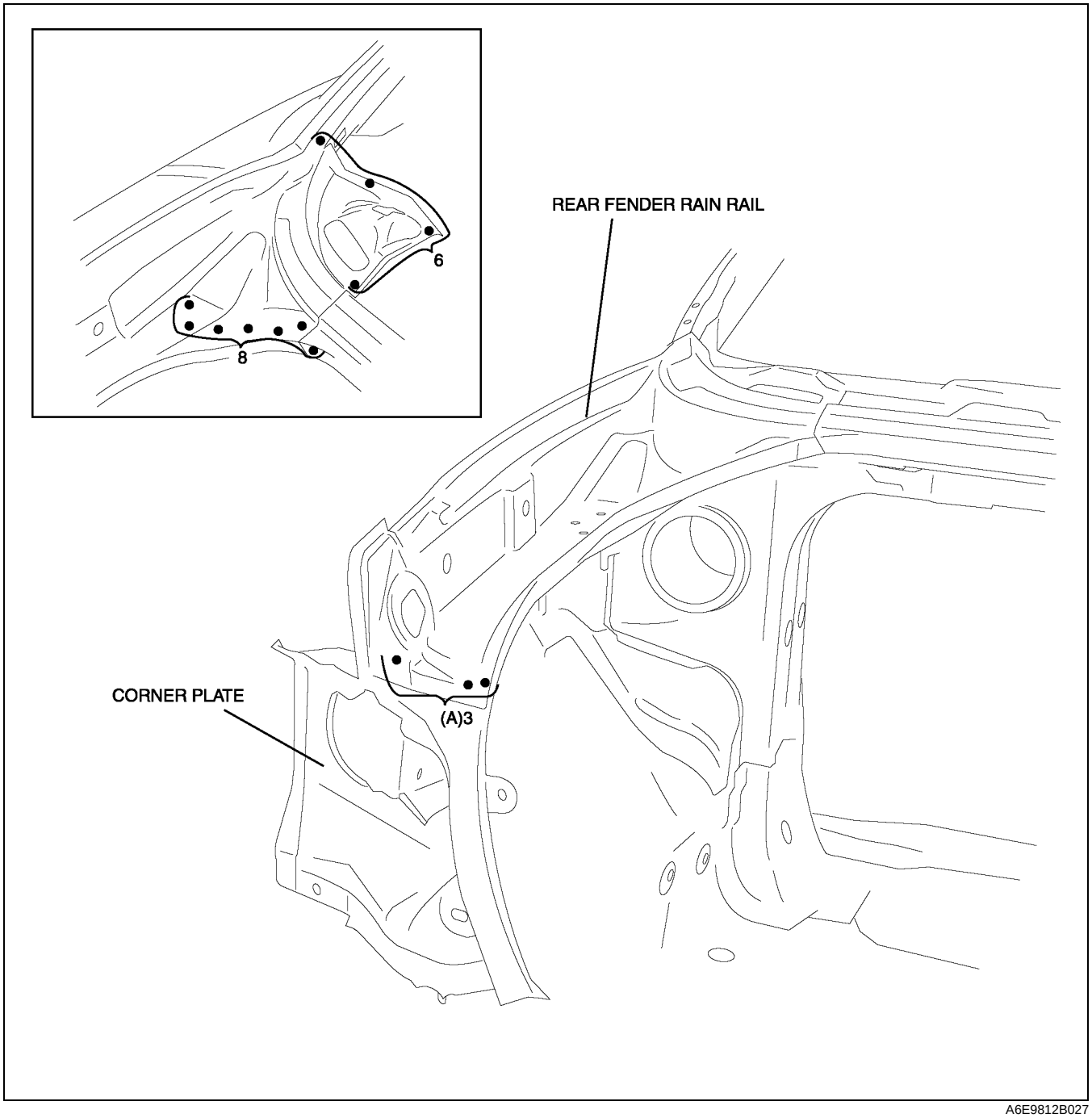

A6E9812B027

5HB

1. Remove the rear fender rain rail and corner plate.

Note

- When removing the rear fender rain rail and the corner plate separately, drill 2 locations indicated by (A).

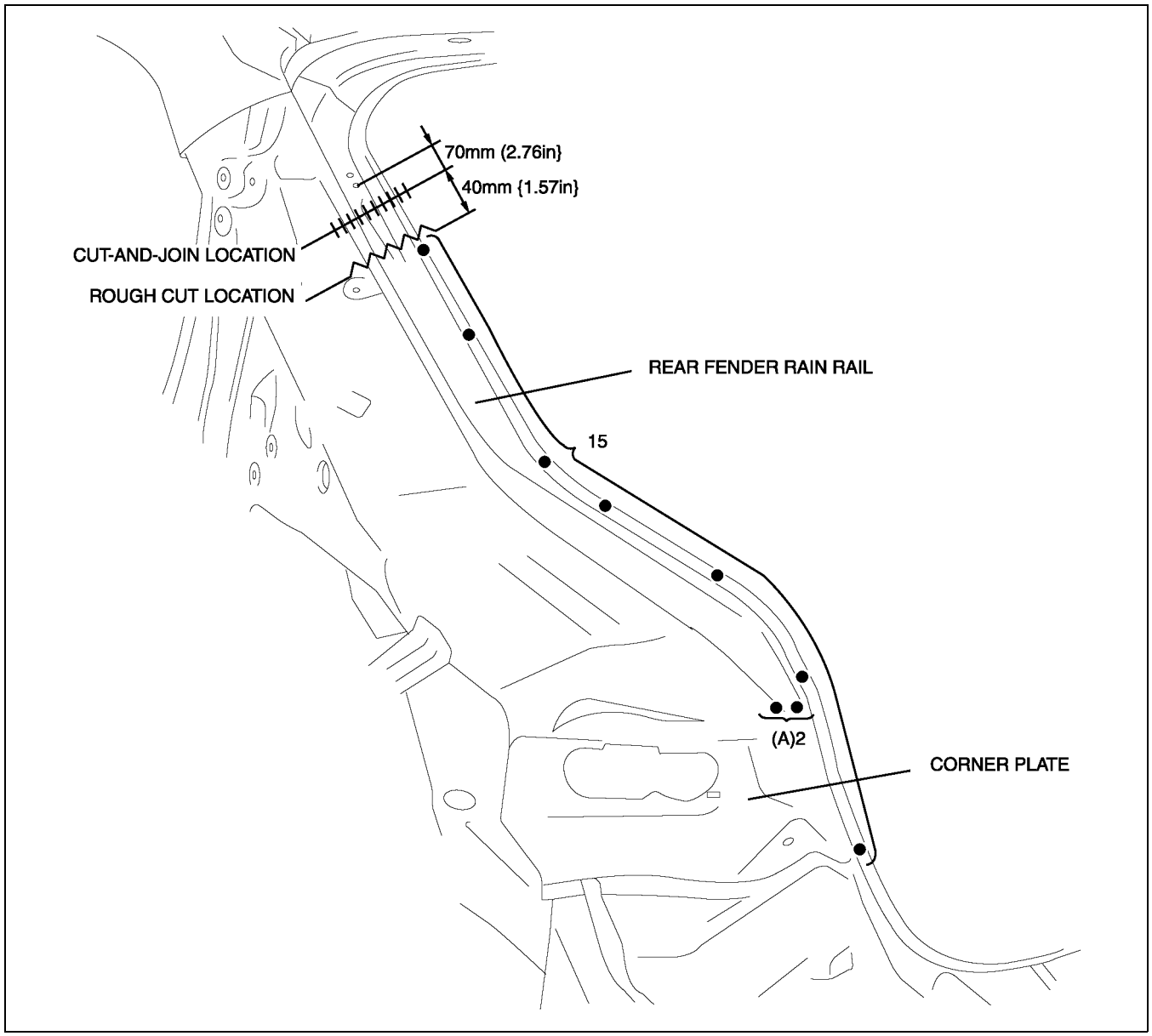

A6E9812B029

REAR FENDER RAIN RAIL AND CORNER PLATE INSTALLATION

A6E981270440B02

SEDAN

1. When installing new parts, position each part so that the section measurement aligns to the body dimension.
2. Drill holes for plug welds before installing new parts.
3. After trial-fitting new parts, make sure the related parts fit properly.

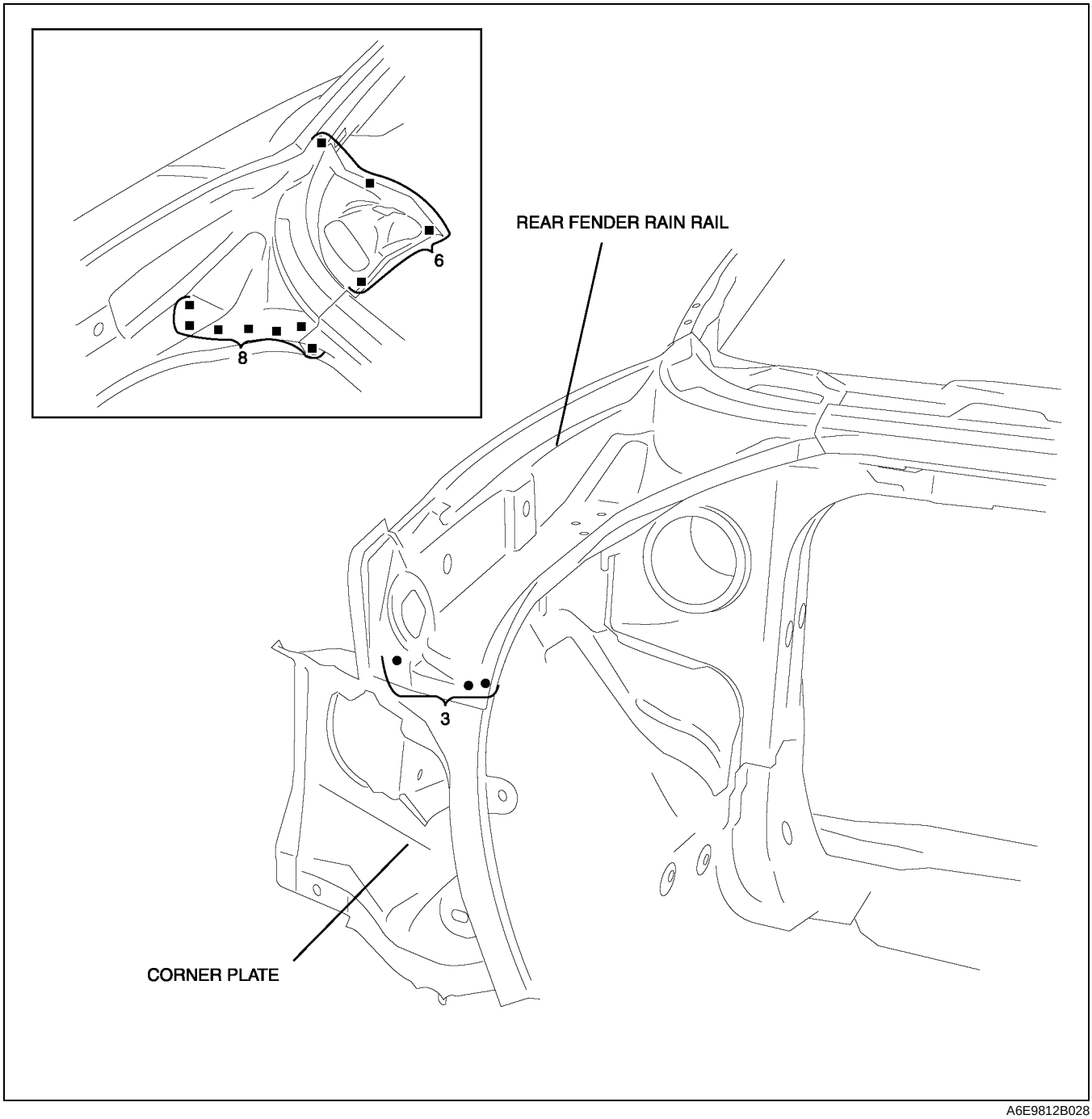

A6E9812B028

5HB

1. When joining the new and old parts, temporarily install and fit the new part in position, measure each dimension according to the body dimension, then adjust the position to align it to the standard dimensions.
2. After trial-fitting new parts, make sure the related parts fit properly.

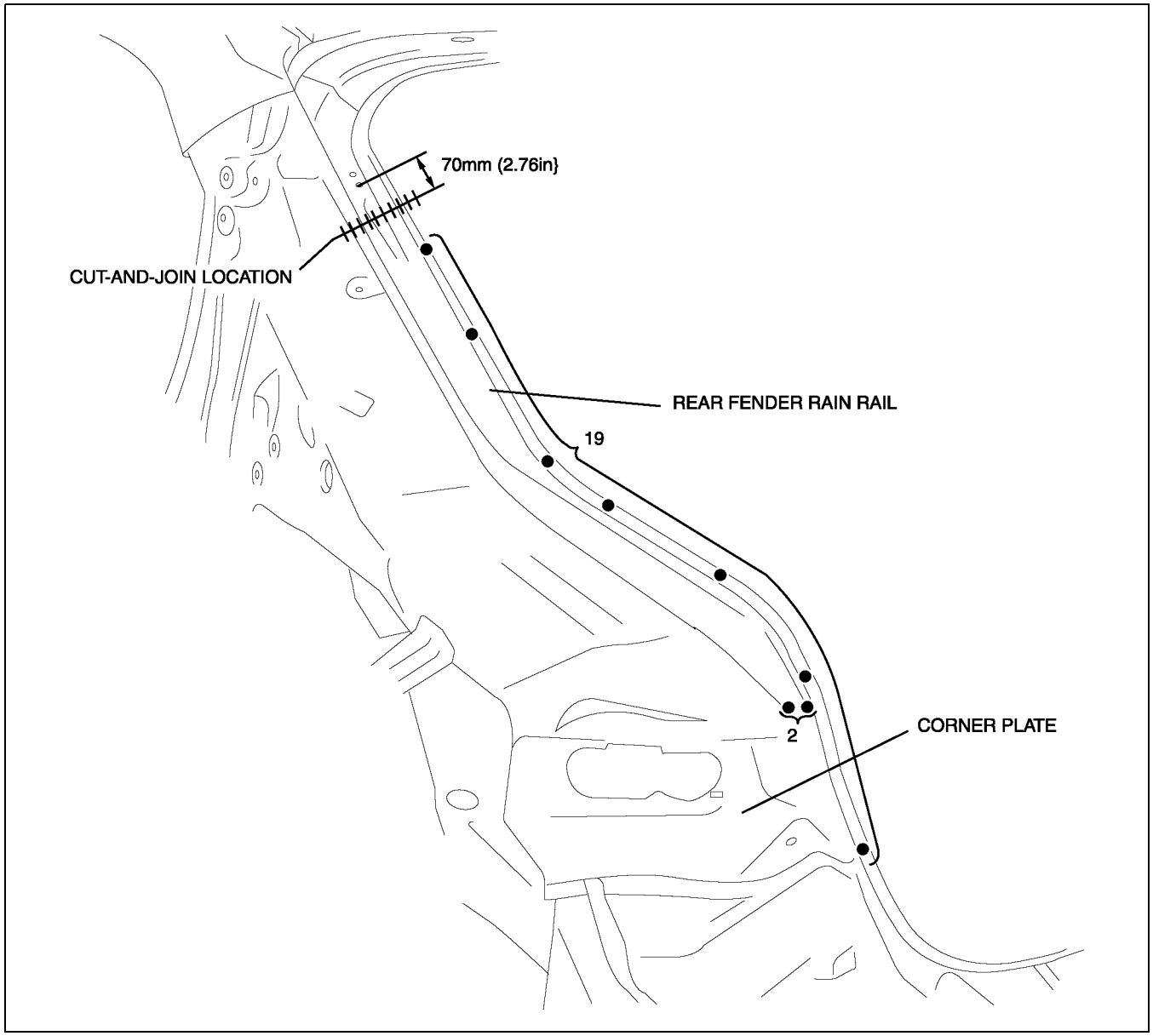

A6E9812B030

REAR FLOOR PAN REMOVAL

A6E981253750B01

1. Remove the rear floor pan.

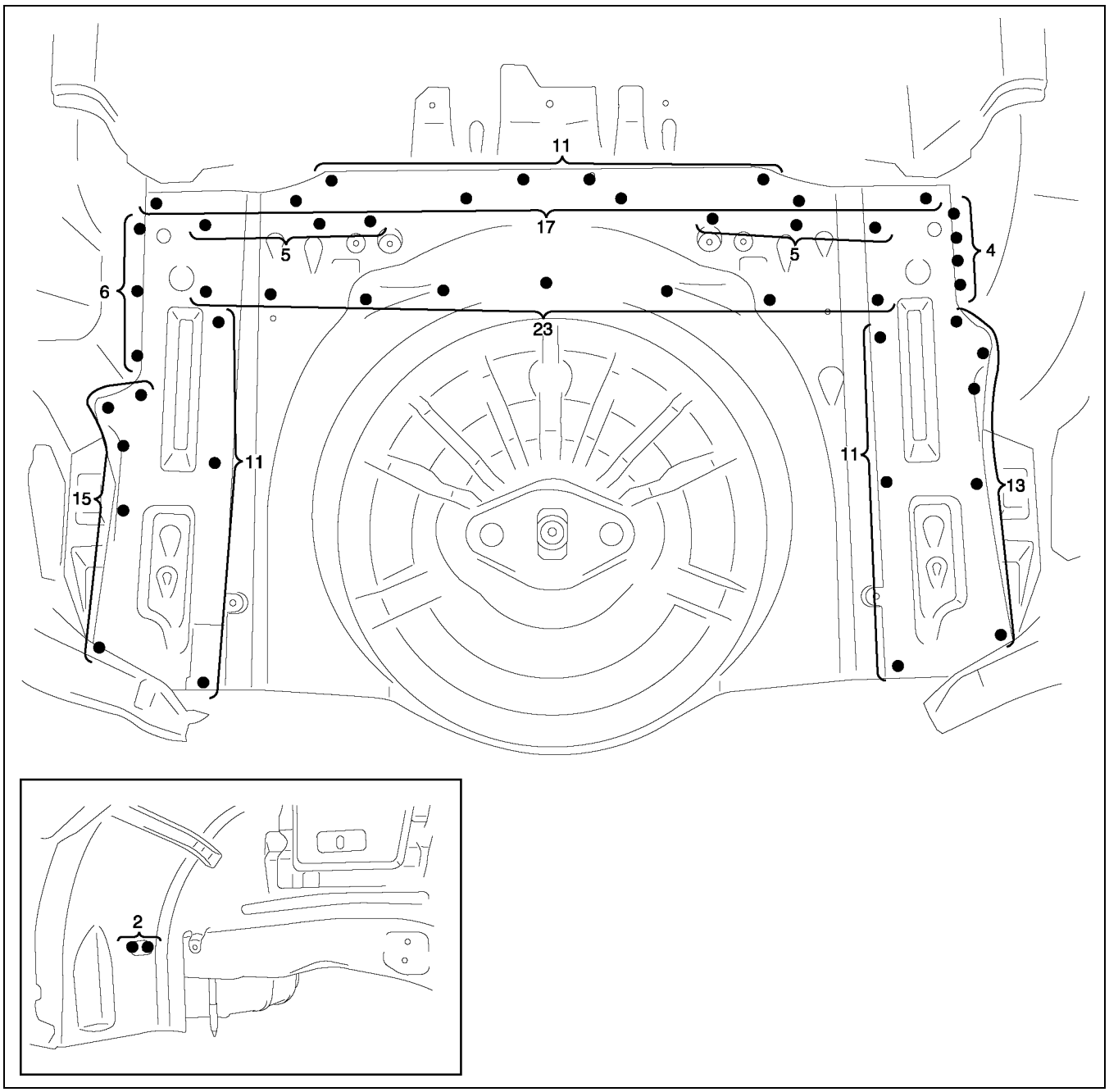

A6E9812B035

REAR FLOOR PAN INSTALLATION

A6E981253750B02

1. Drill holes for plug welds before installing new parts.
2. After trial-fitting new parts, make sure the related parts fit properly.

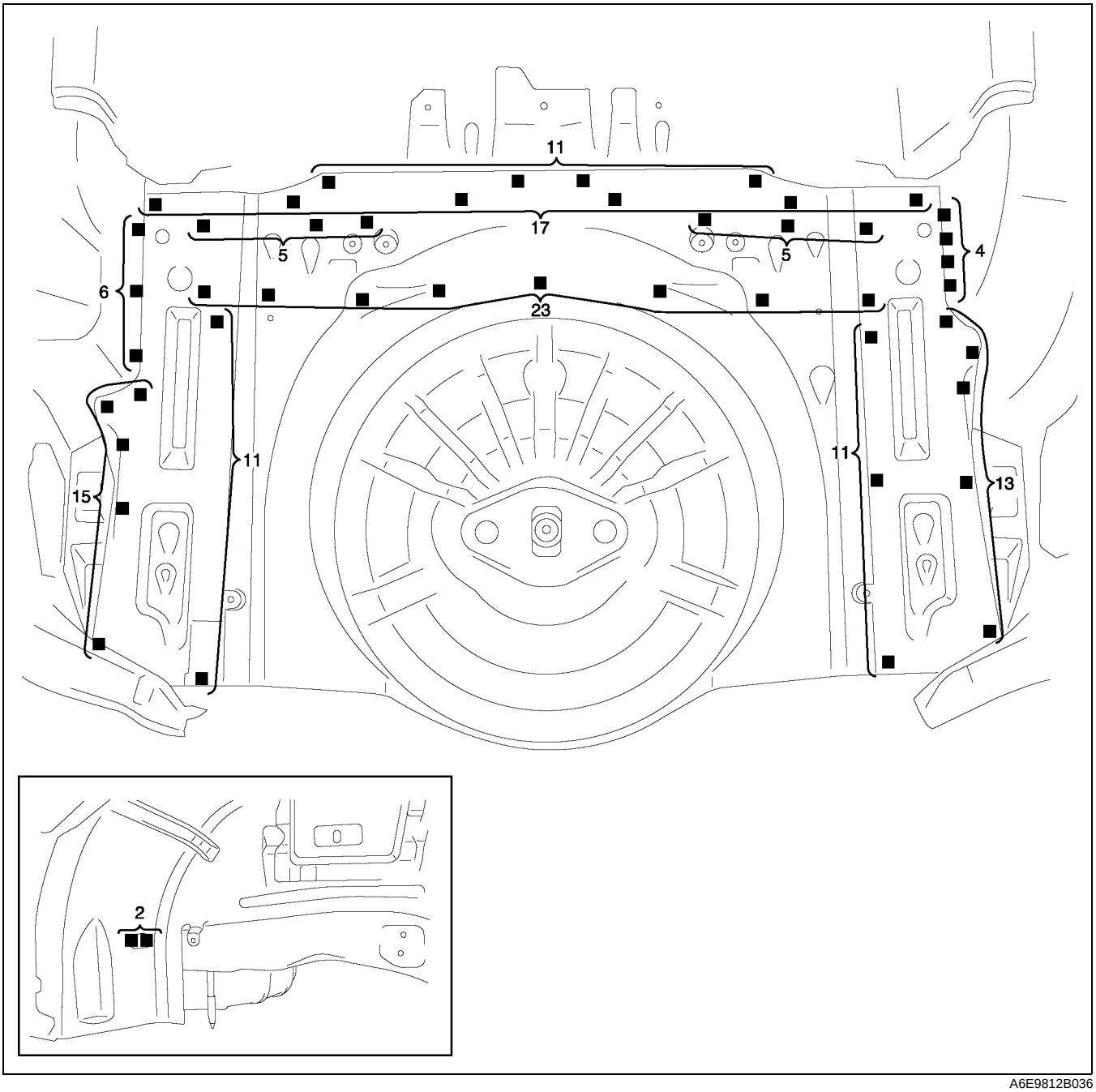

A6E9812B036

FLOOR SIDE PANEL REMOVAL

A6E981253730B01

SEDAN

1. Remove the floor side panel.

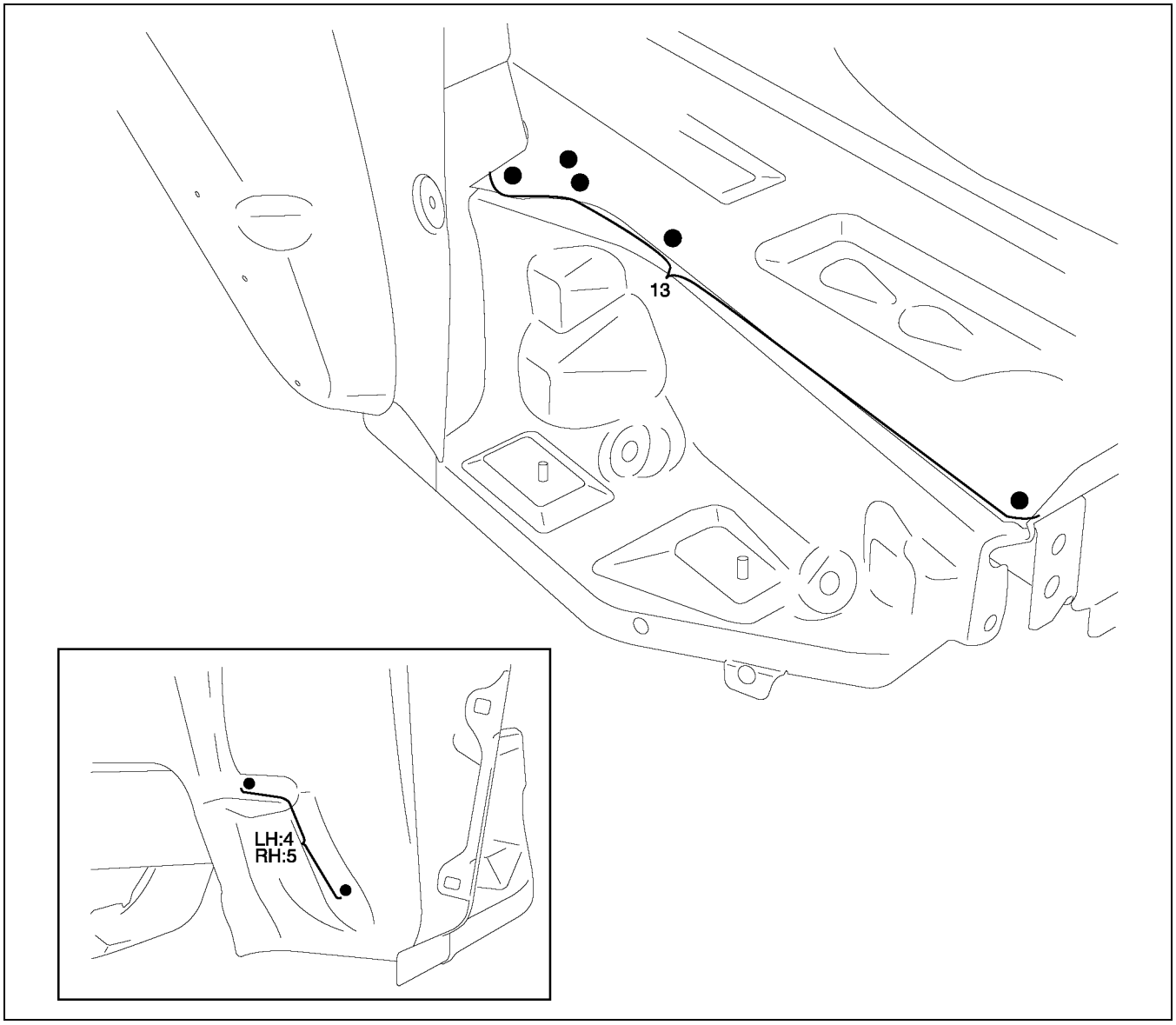

A6E9812B037

5HB

1. Remove the floor side panel.

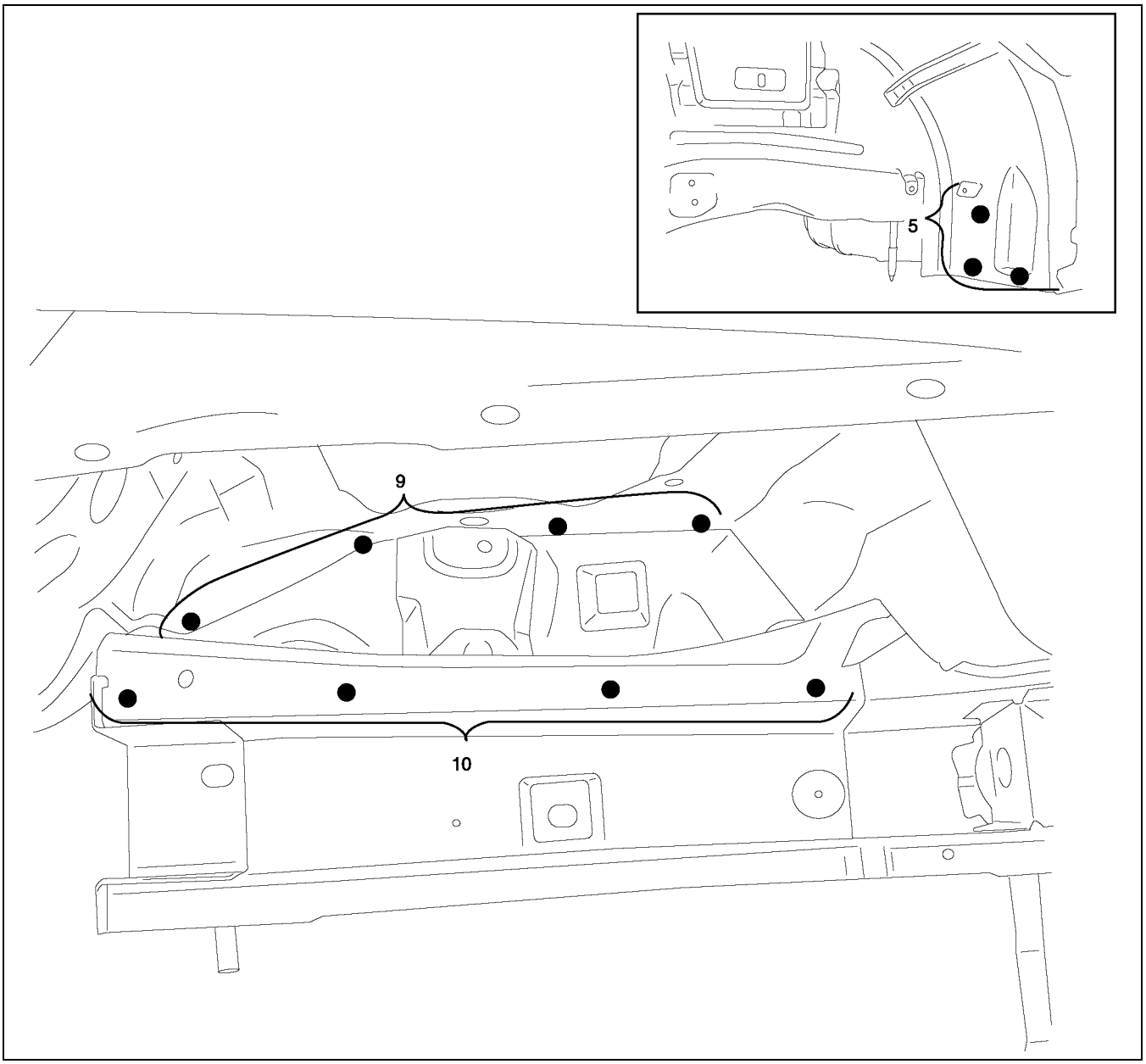

A6E9812B039

FLOOR SIDE PANEL INSTALLATION

A6E981253730B02

SEDAN

1. Drill holes for plug welds before installing new parts.
2. After trial-fitting new parts, make sure the related parts fit properly.

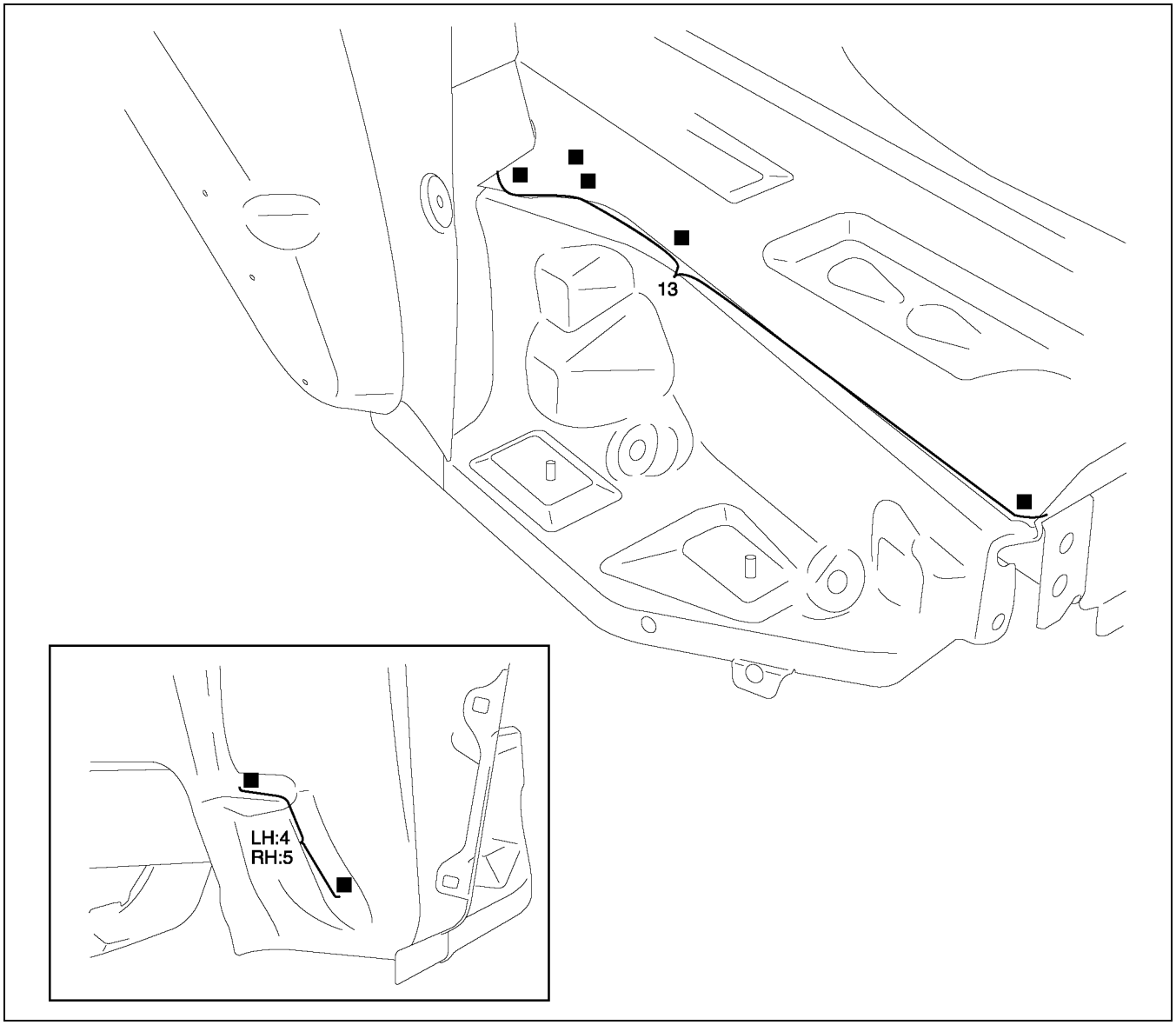

A6E9812B038

5HB

1. Drill holes for plug welds before installing new parts.
2. After trial-fitting new parts, make sure the related parts fit properly.

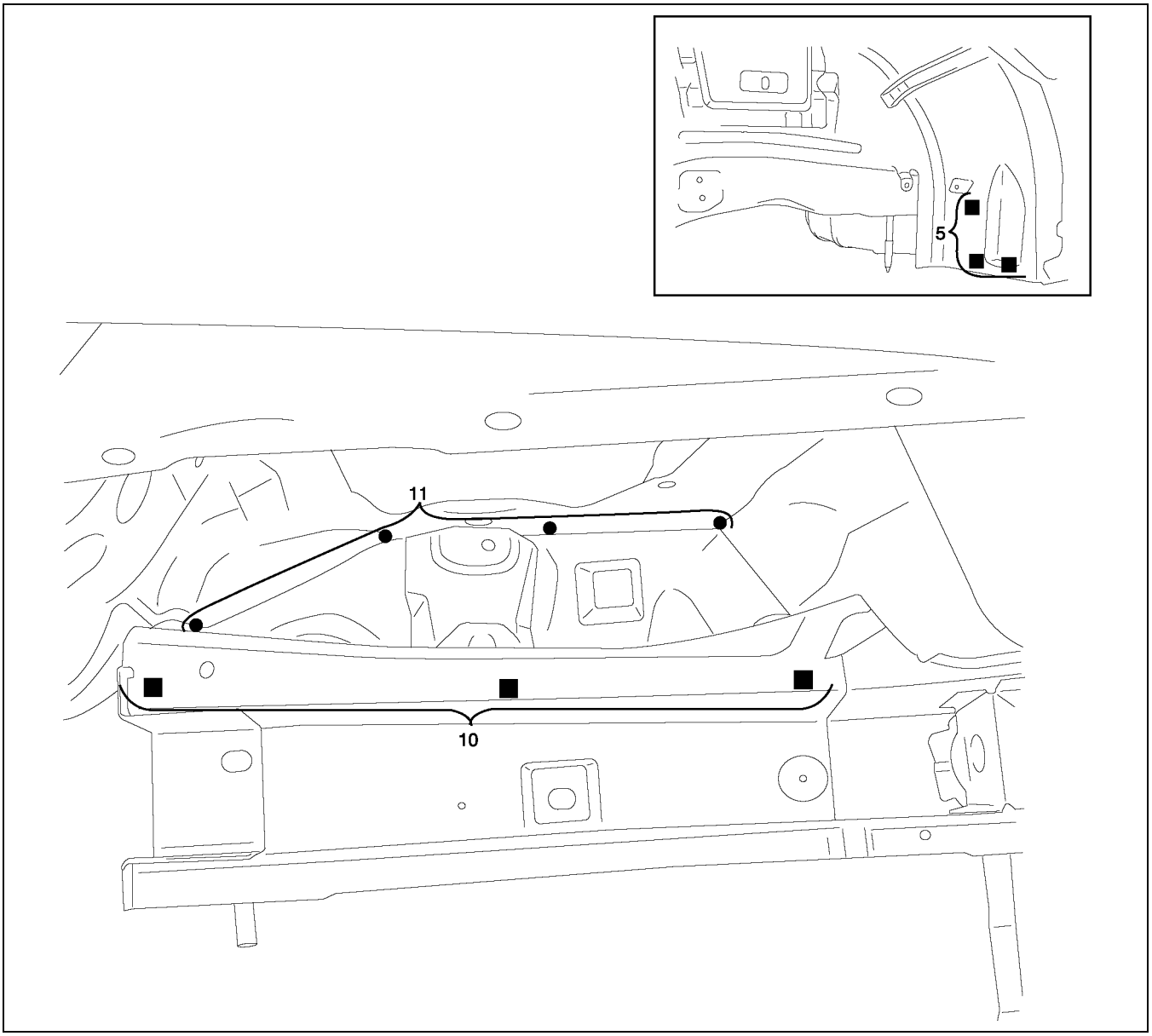

A6E9812B040

REAR SIDE FRAME (PARTIAL CUTTING) REMOVAL

A6E981253815B01

1. Rough cut and remove the damaged part of the rear side frame.

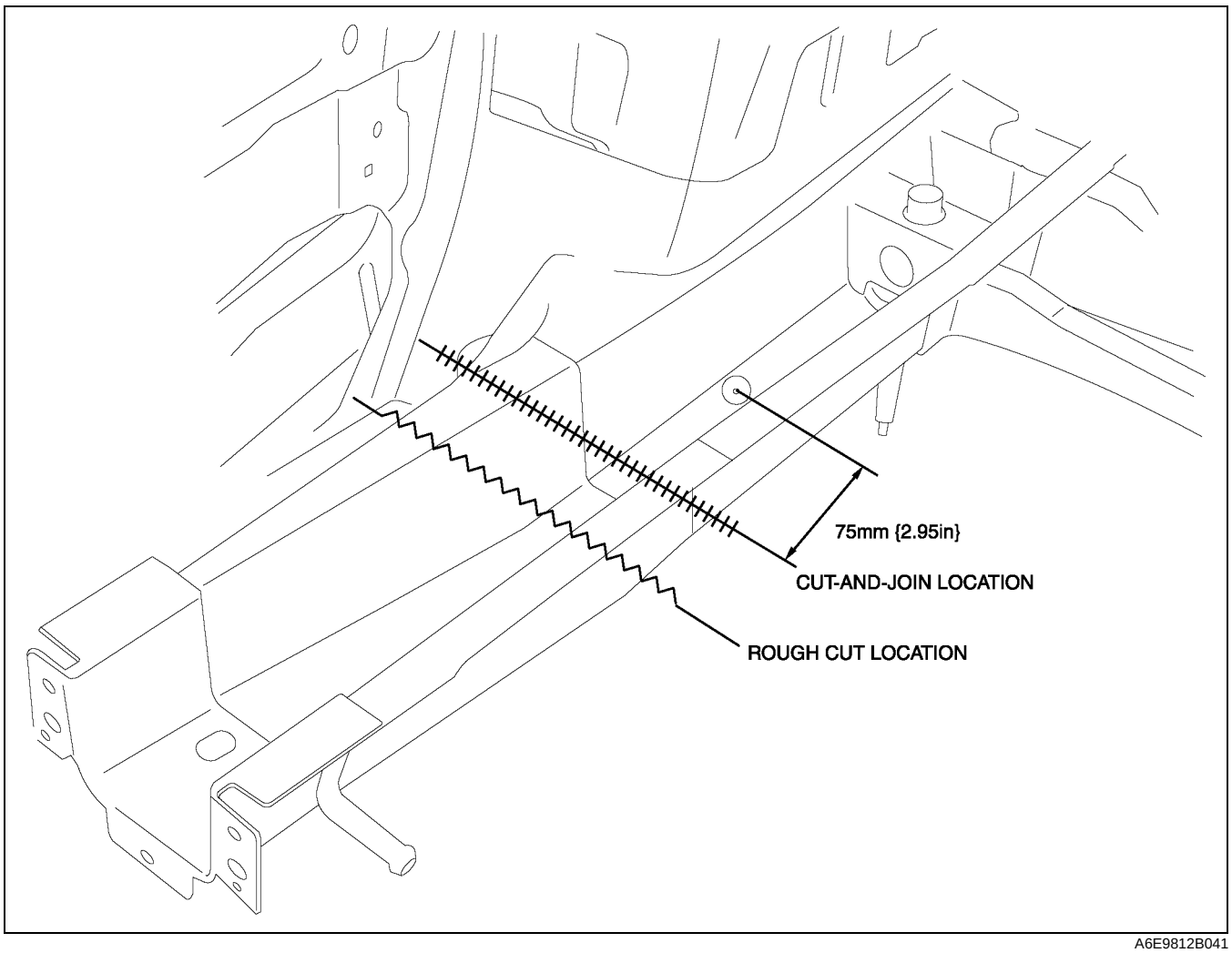

A6E9812B041

REAR SIDE FRAME (PARTIAL CUTTING) INSTALLATION

A6E981253815B02

1. Cut the new and old parts at the cut-and-join location, and bevel the parts.
2. When installing new parts, position each part so that the section measurement aligns to the standard dimensions.
3. After trial-fitting new parts, make sure the related parts fit properly.

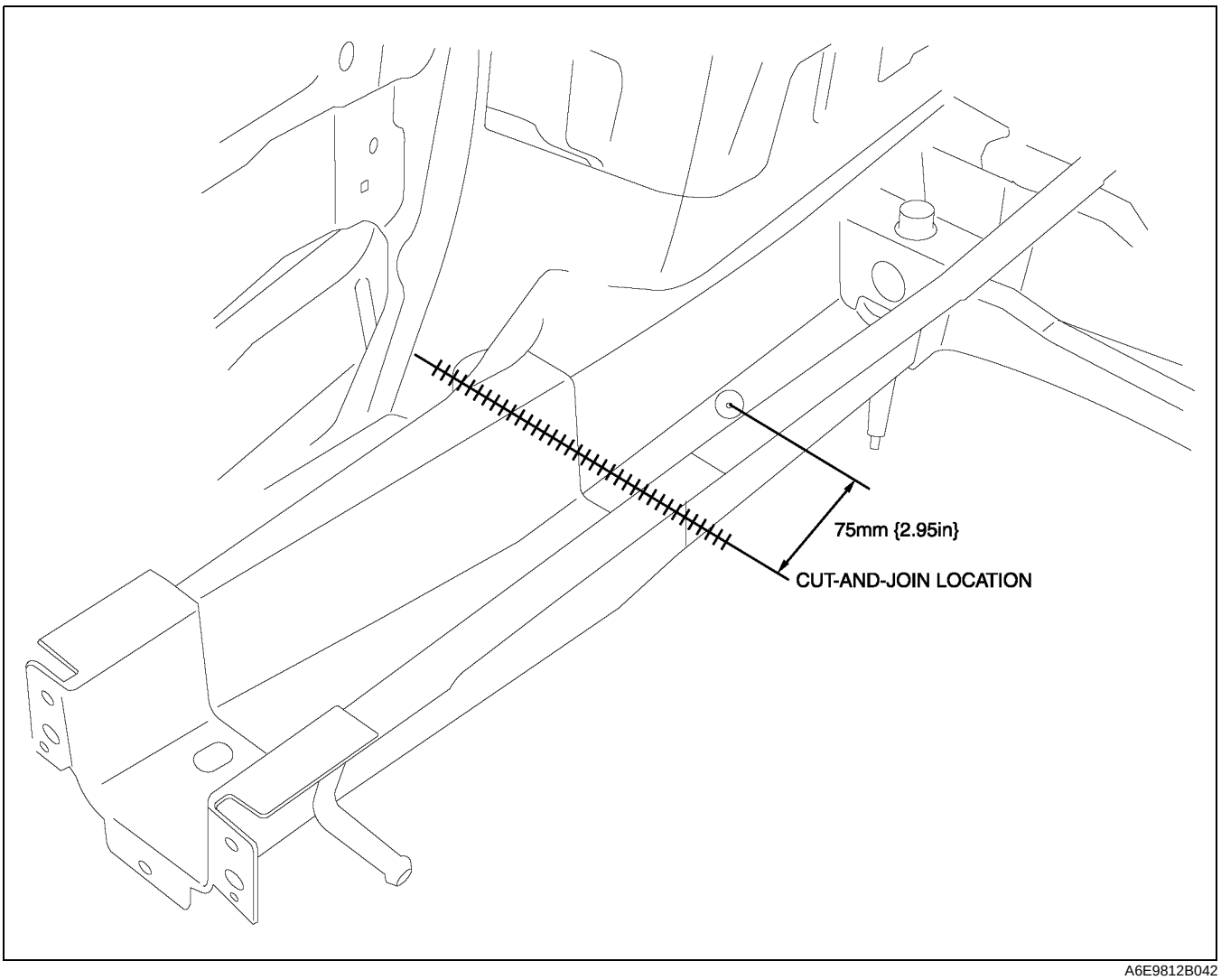

A6E9812B042

ROOF PANEL REMOVAL

A6E981270600B01

SEDAN

1. Remove the roof panel.

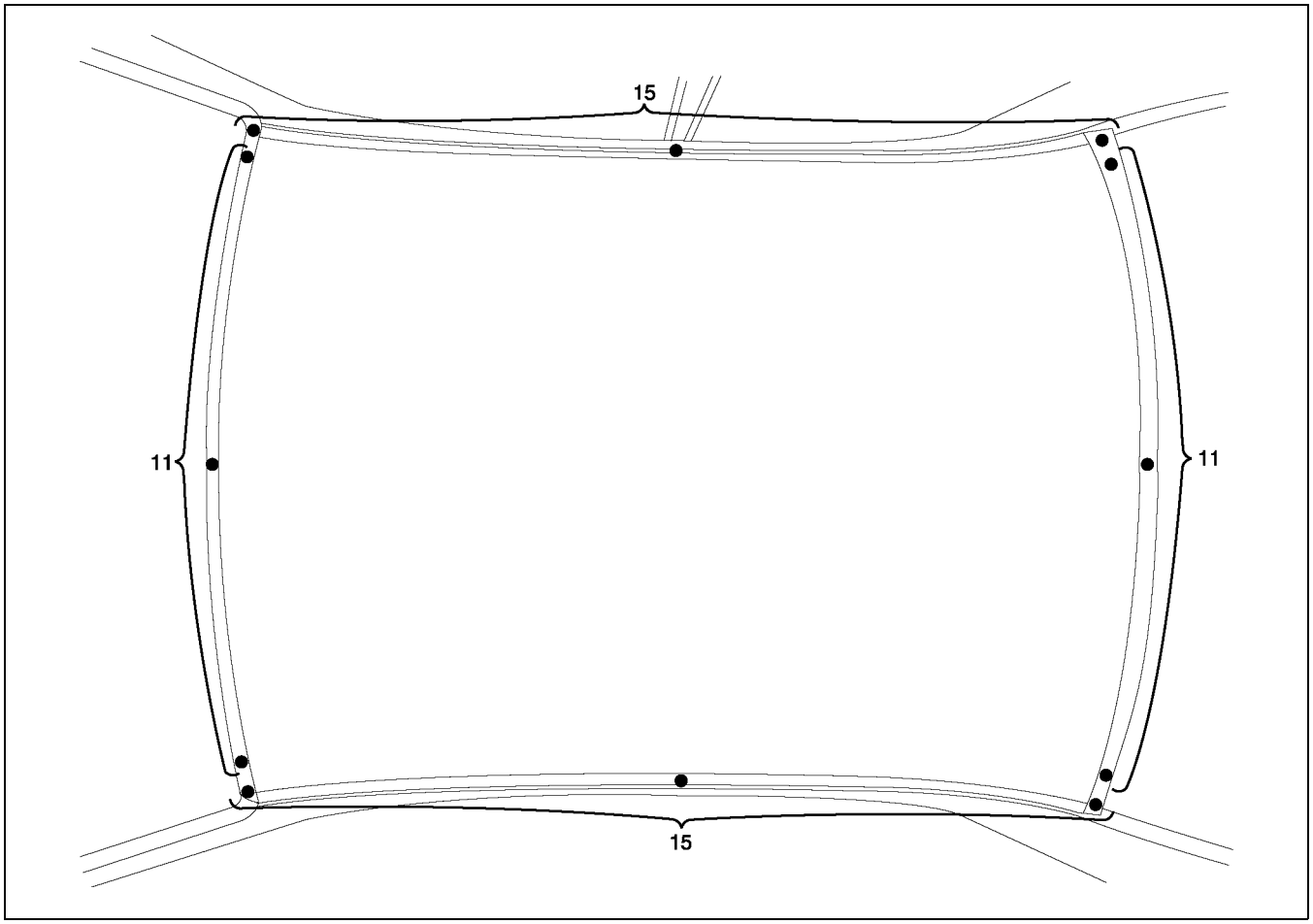

A6E9812B031

5HB

1. Remove the roof panel.

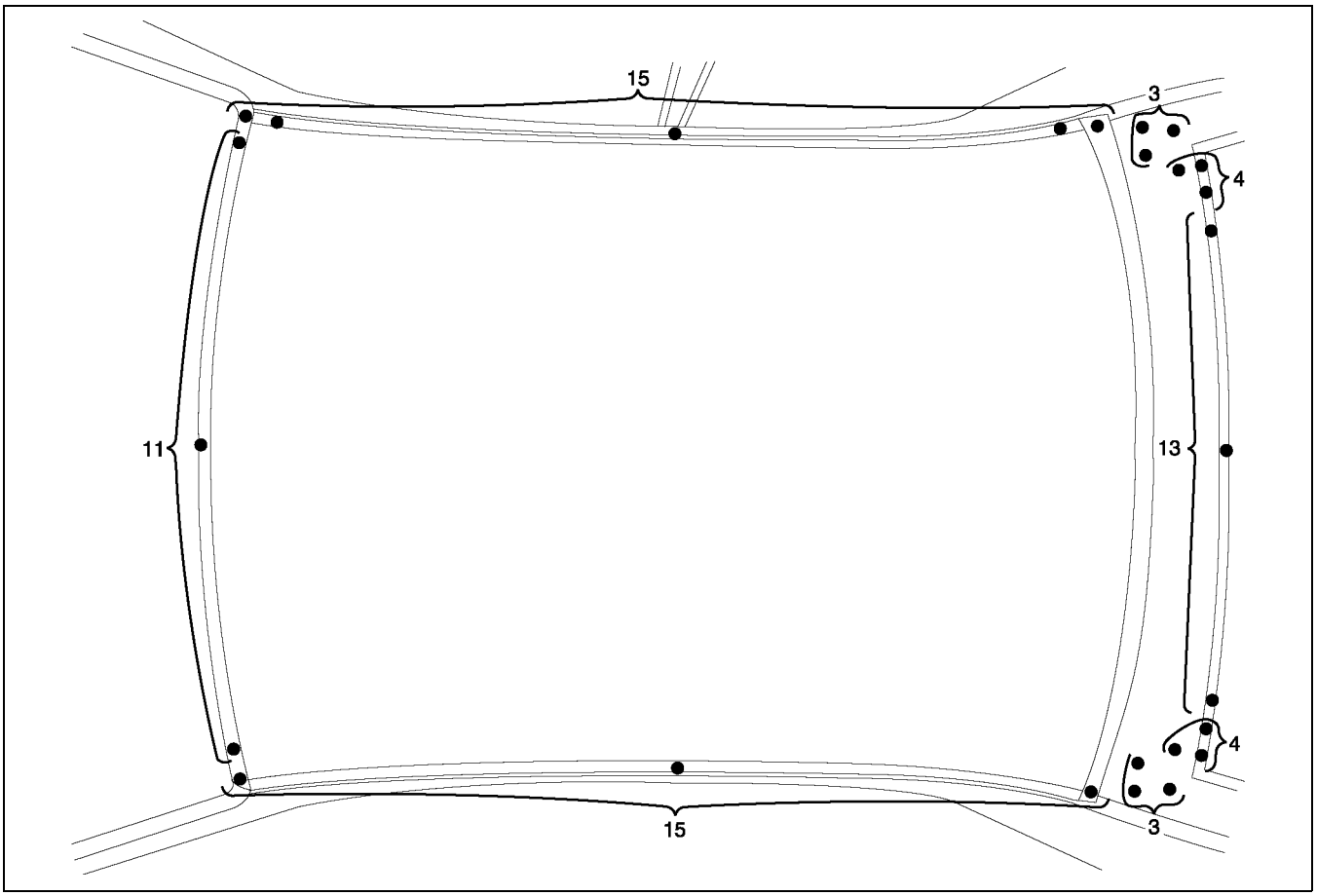

A6E9812B033

ROOF PANEL INSTALLATION

A6E981270600B02

SEDAN

1. Drill holes for plug welds before installing new parts.
2. After trial-fitting new parts, make sure the related parts fit properly.

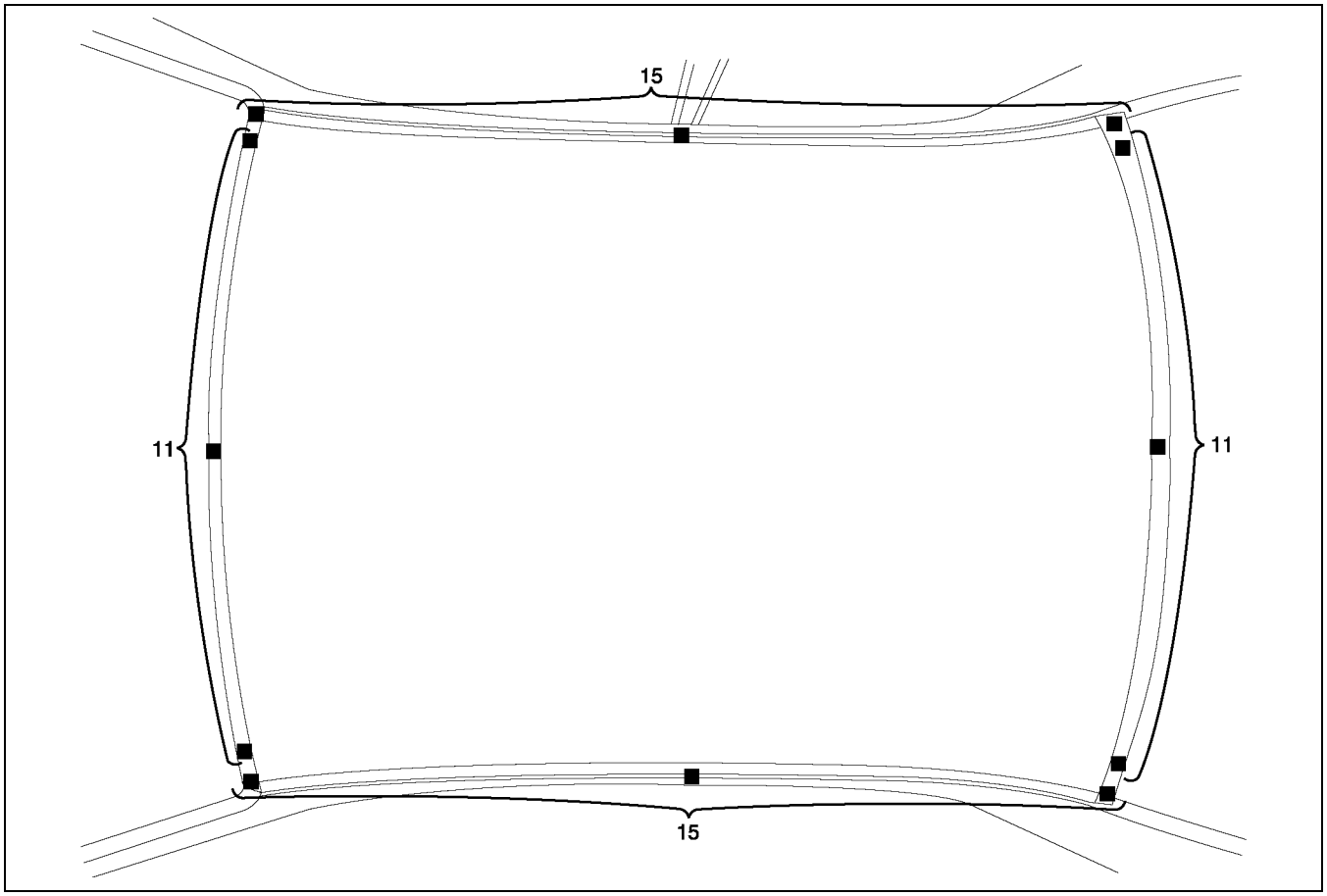

A6E9812B032

5HB

1. Drill holes for plug welds before installing new parts.
2. After trial-fitting new parts, make sure the related parts fit properly.

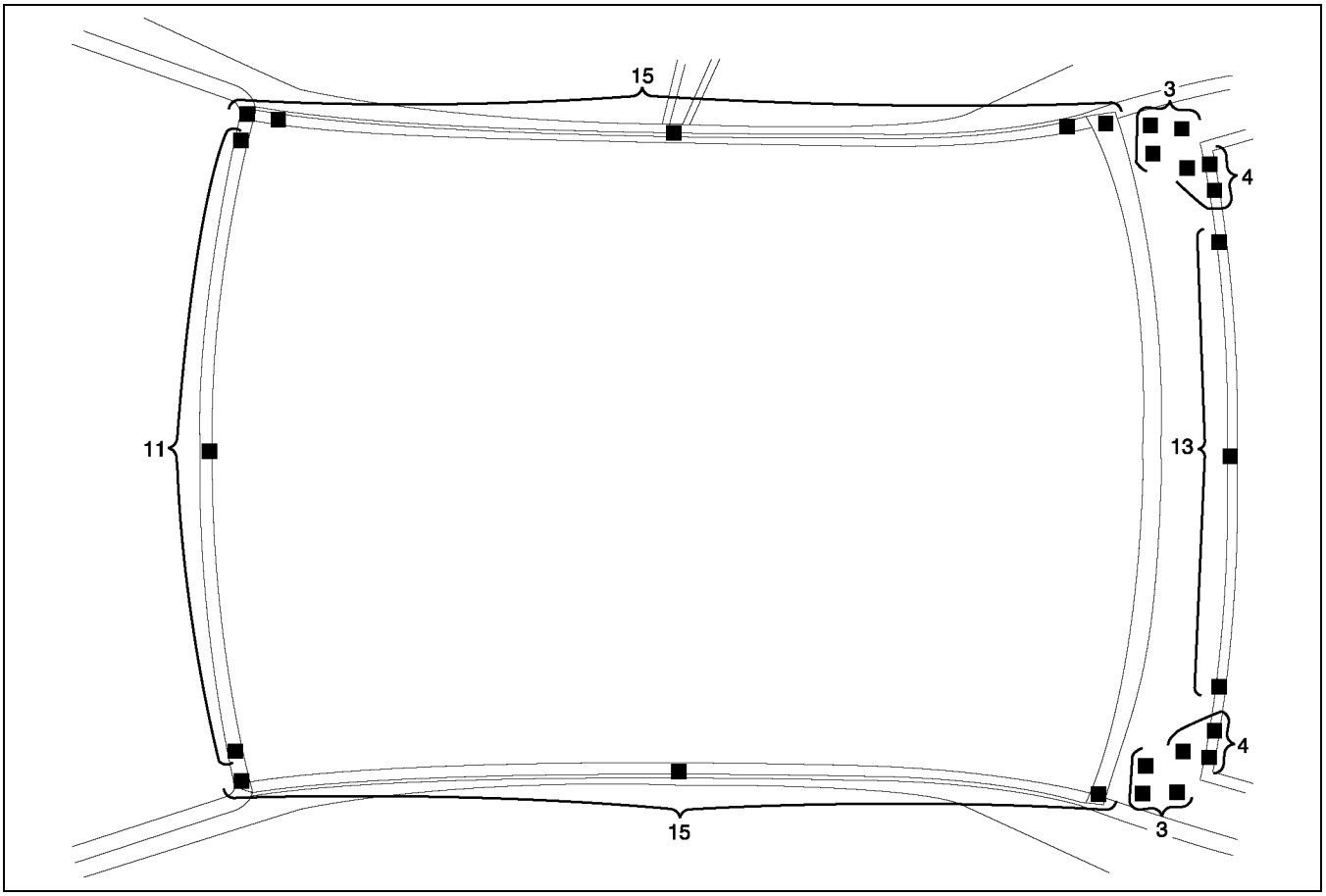

A6E9812B034

WATER-PROOF AND RUST PREVENTIVE TREATMENT

WATER-PROOF AND RUST PREVENTIVE TREATMENT IV-2
BODY SEALING IV-2
UNDER COATING IV-5
PVC PAINTING IV-6
RUST PREVENTIVE TREATMENT IV-7

WATER-PROOF AND RUST PREVENTIVE TREATMENT

BODY SEALING

A6E981407000B01

Sealant is applied to the parts where the panels meet and to the hemmed parts of the door panel and bonnet to provide waterproofing and rust proofing.

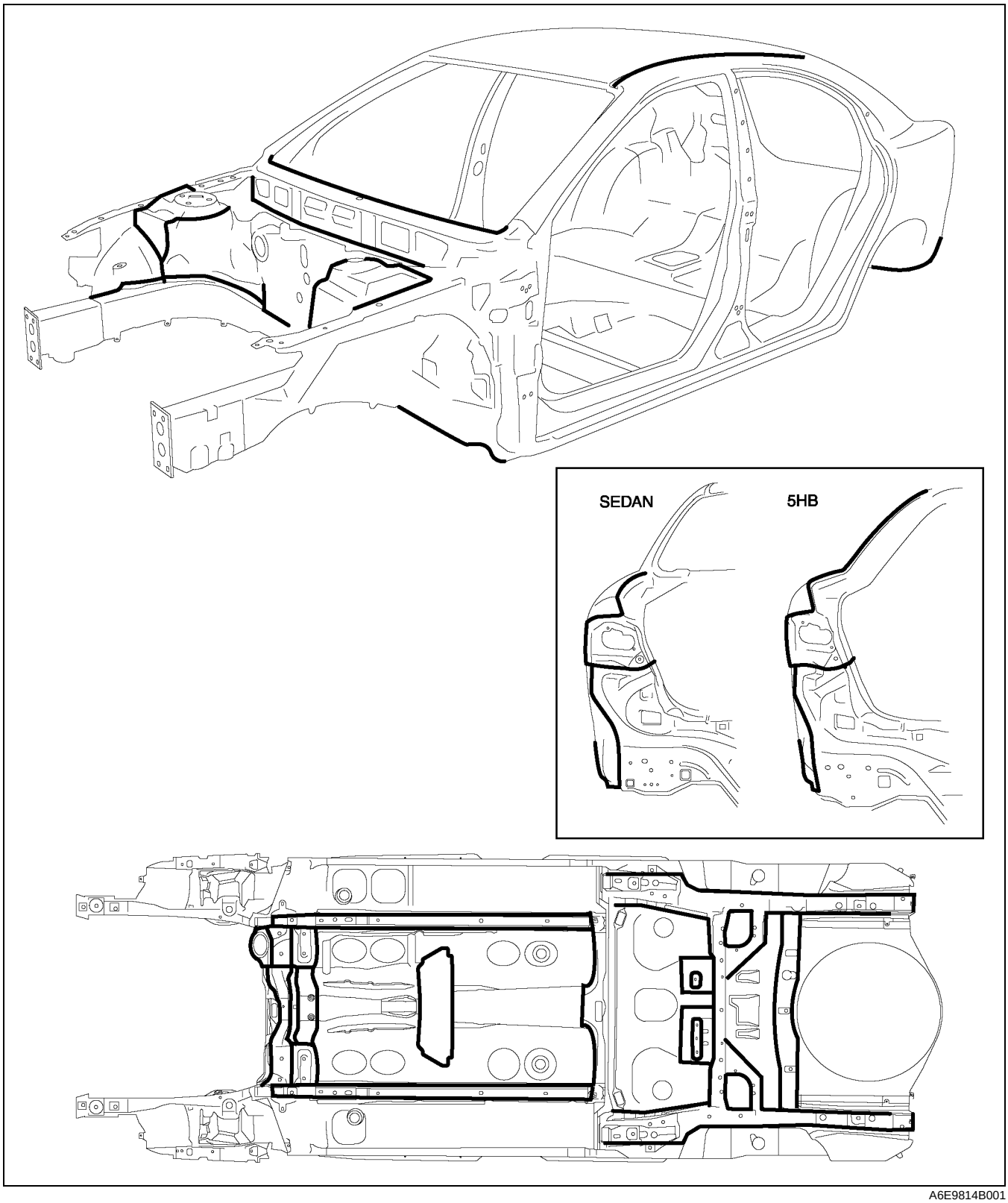

A6E9814B001

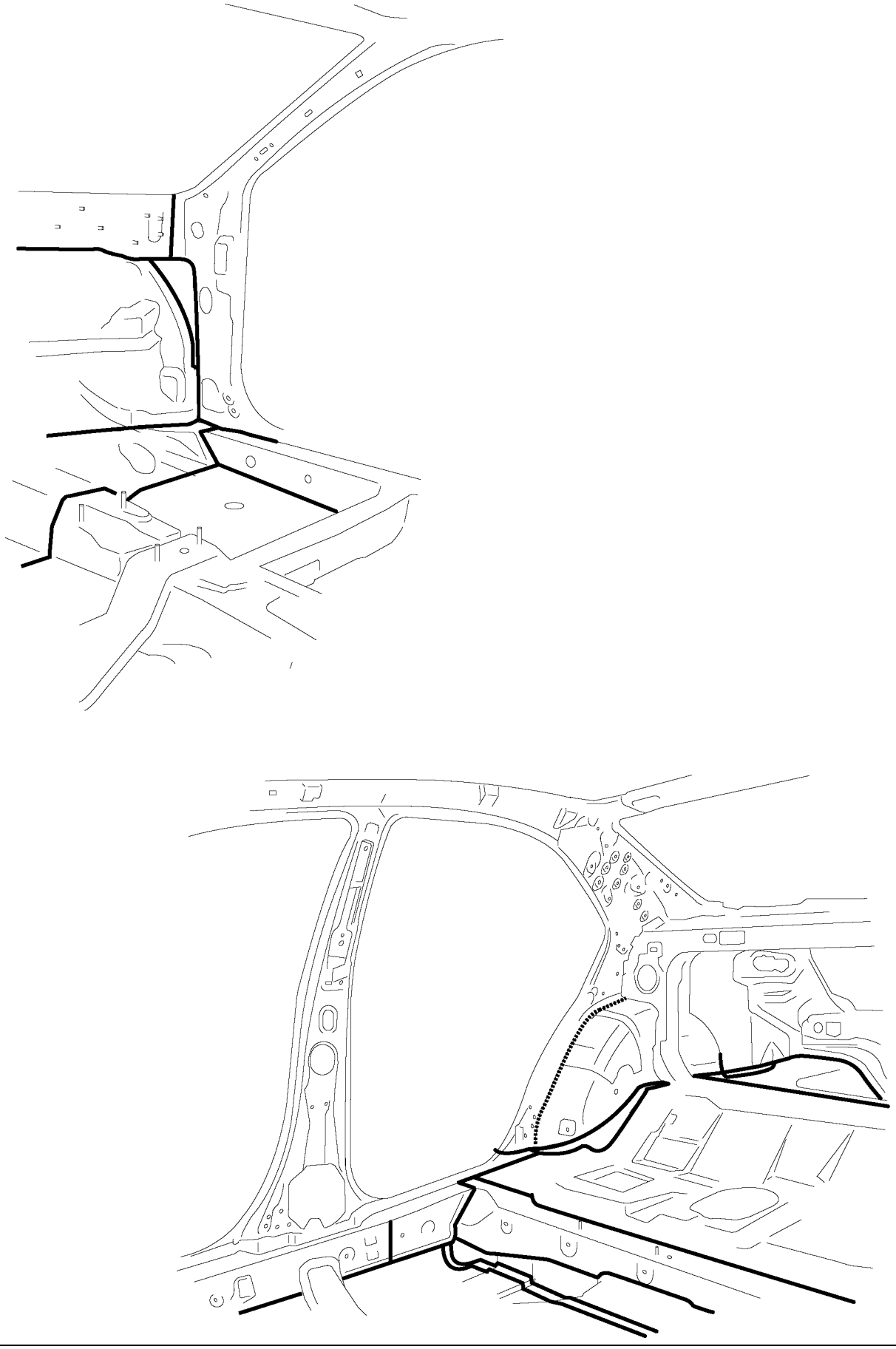

A6E9814B002

BONNET

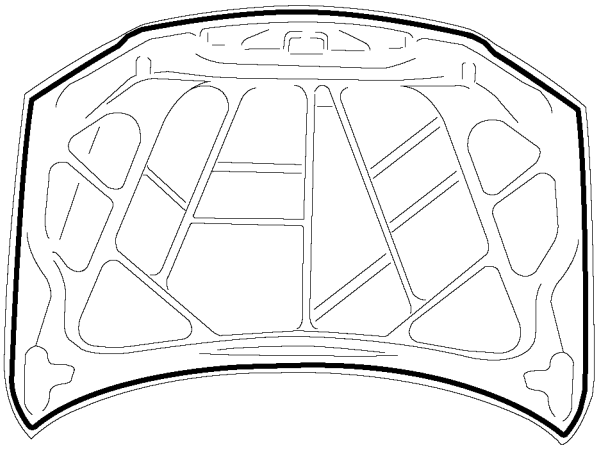

DOOR

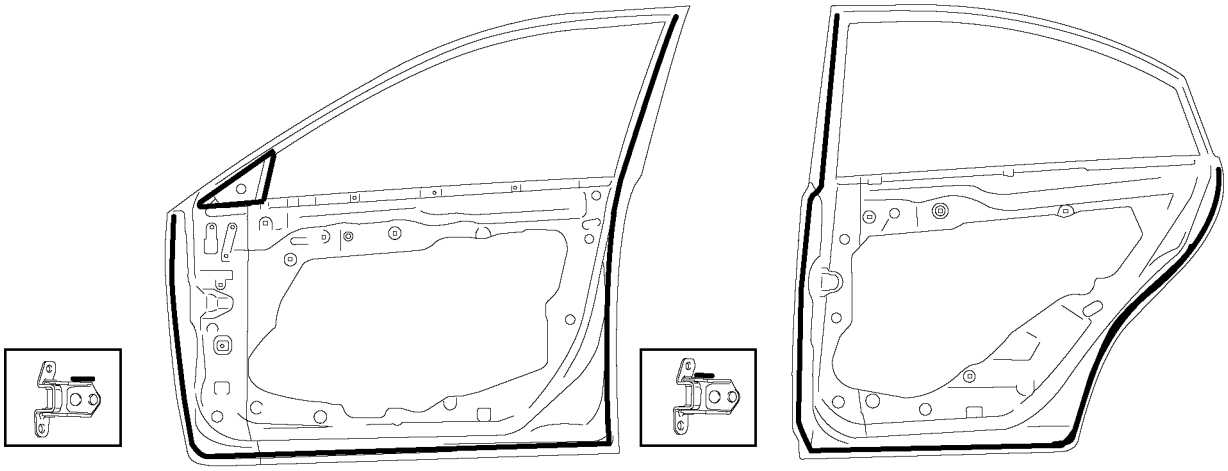

TRUNK LID



LIFTGATE

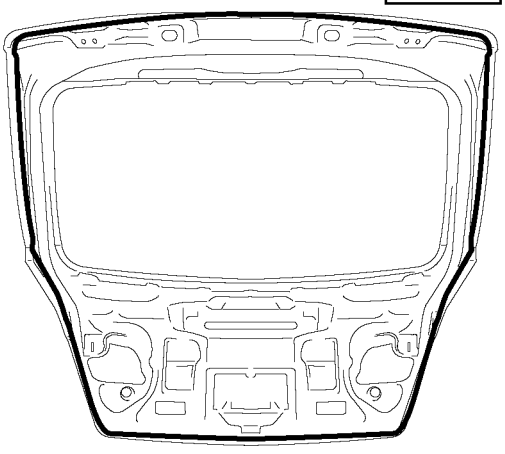

A6E9814B003

UNDER COATING

A6E981407000B02

The shaded areas indicated underbody locations that are undercoated to prevent noise and rusting.

European(L.H.D. U.K.)specs

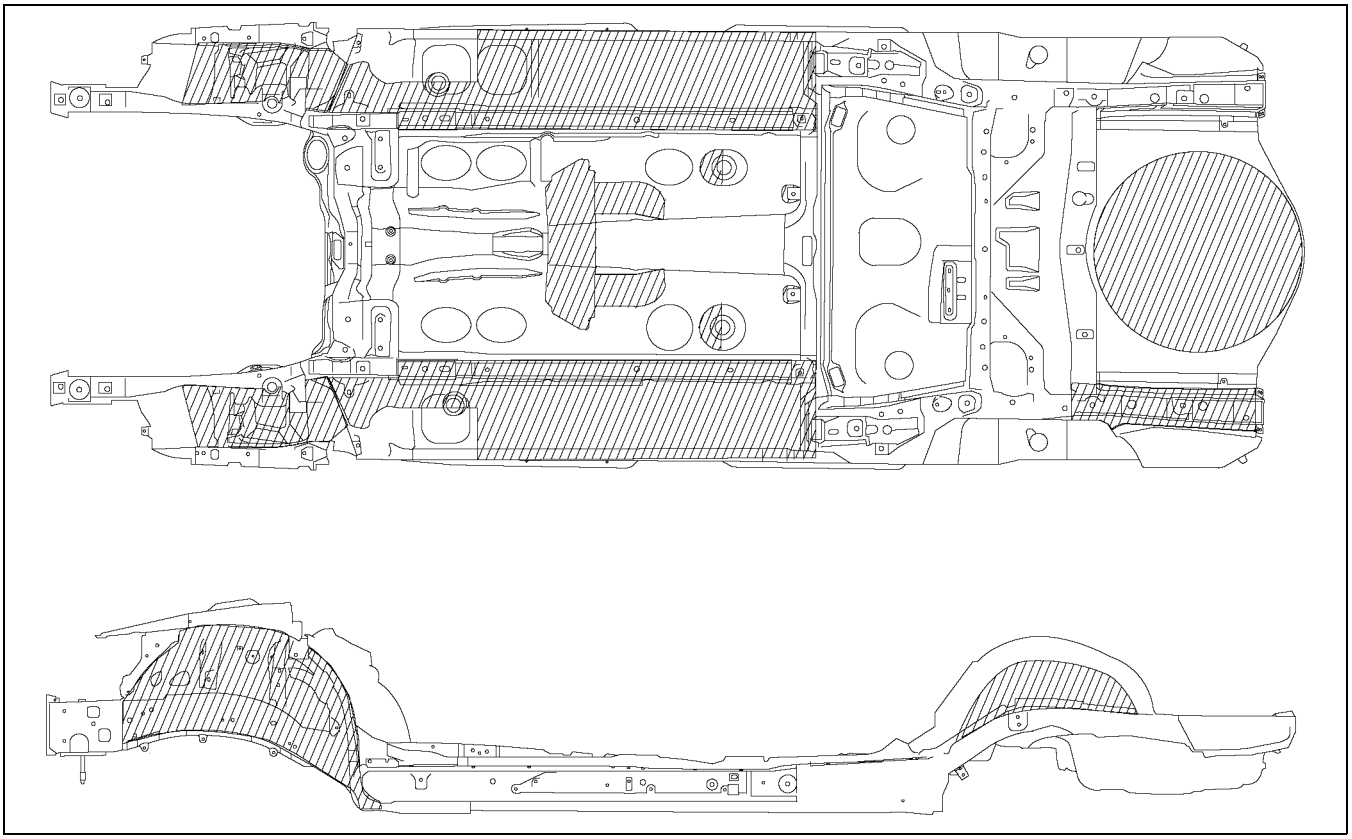

A6E9814B004

GCC specs

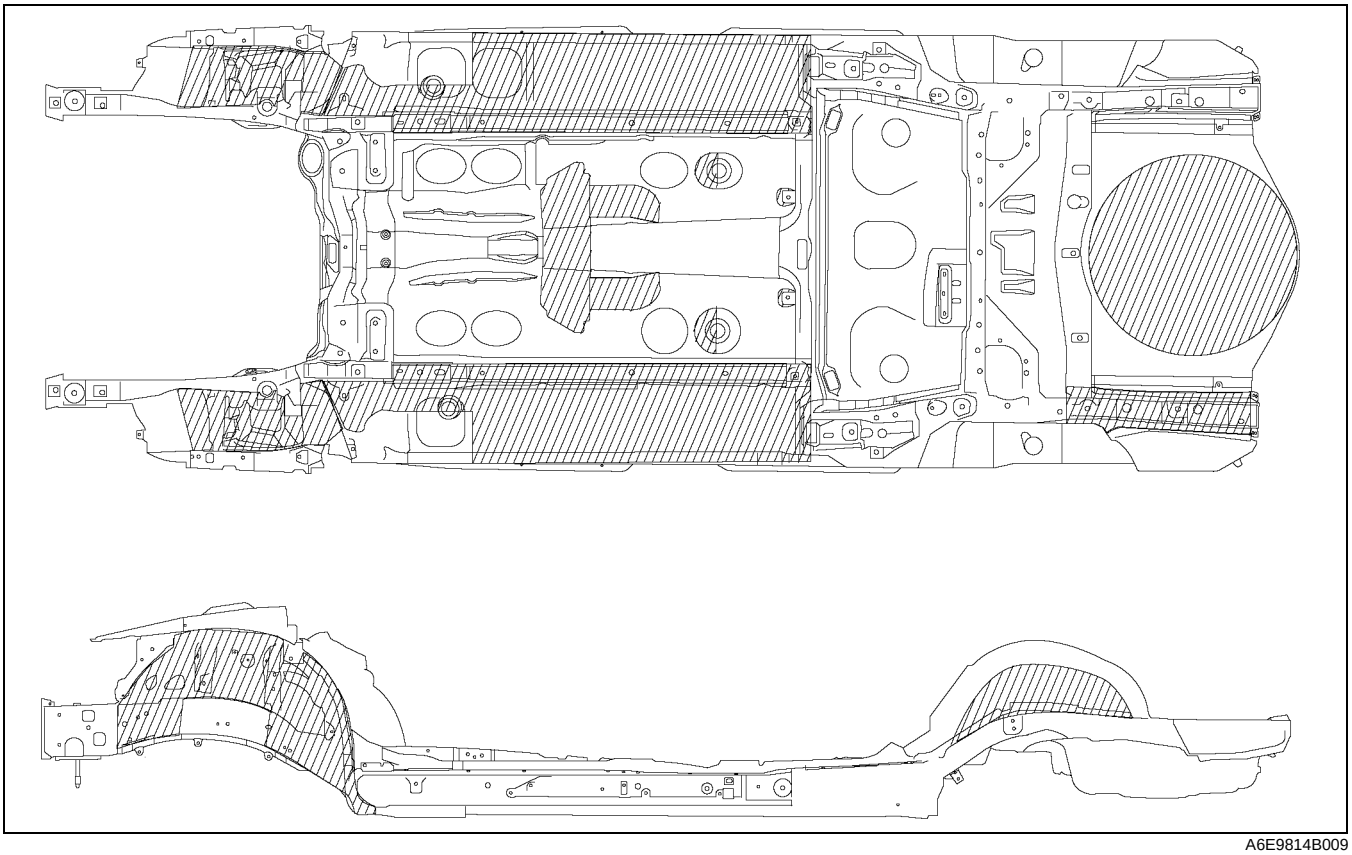

A6E9814B009

PVC PAINTING

A6E981407000B04

The coating locations are indicated by the shaded areas.

SEDAN

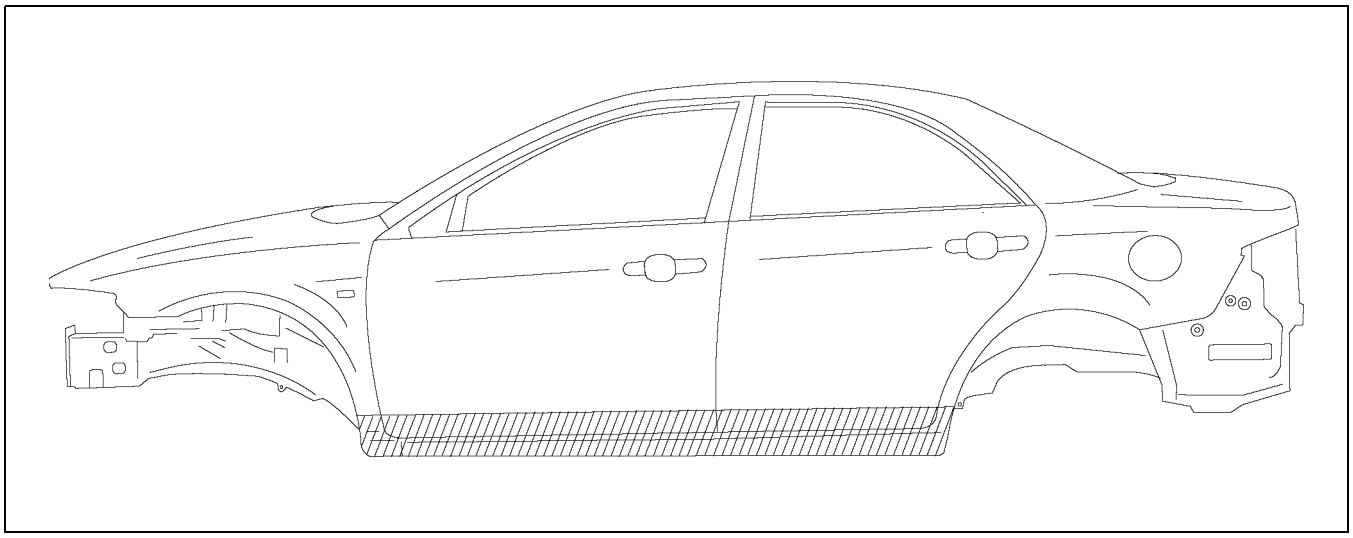

A6E9814B005

5HB

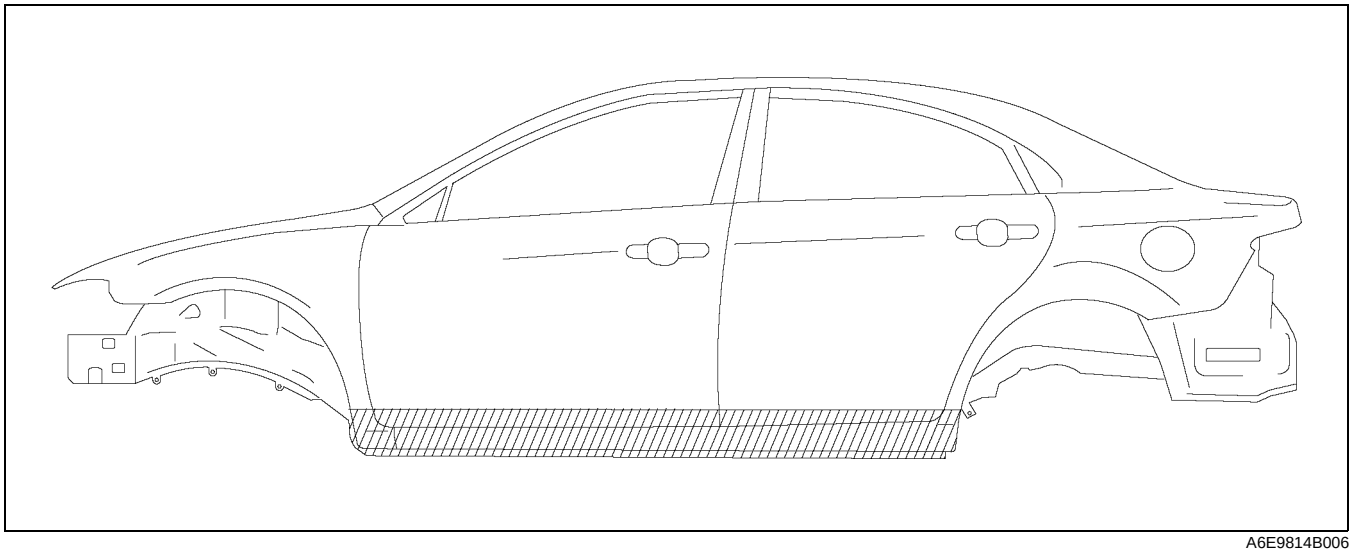

A6E9814B006

RUST PREVENTIVE TREATMENT

A6E981407000B03

The coating locations are indicated by the shaded areas.

SEDAN

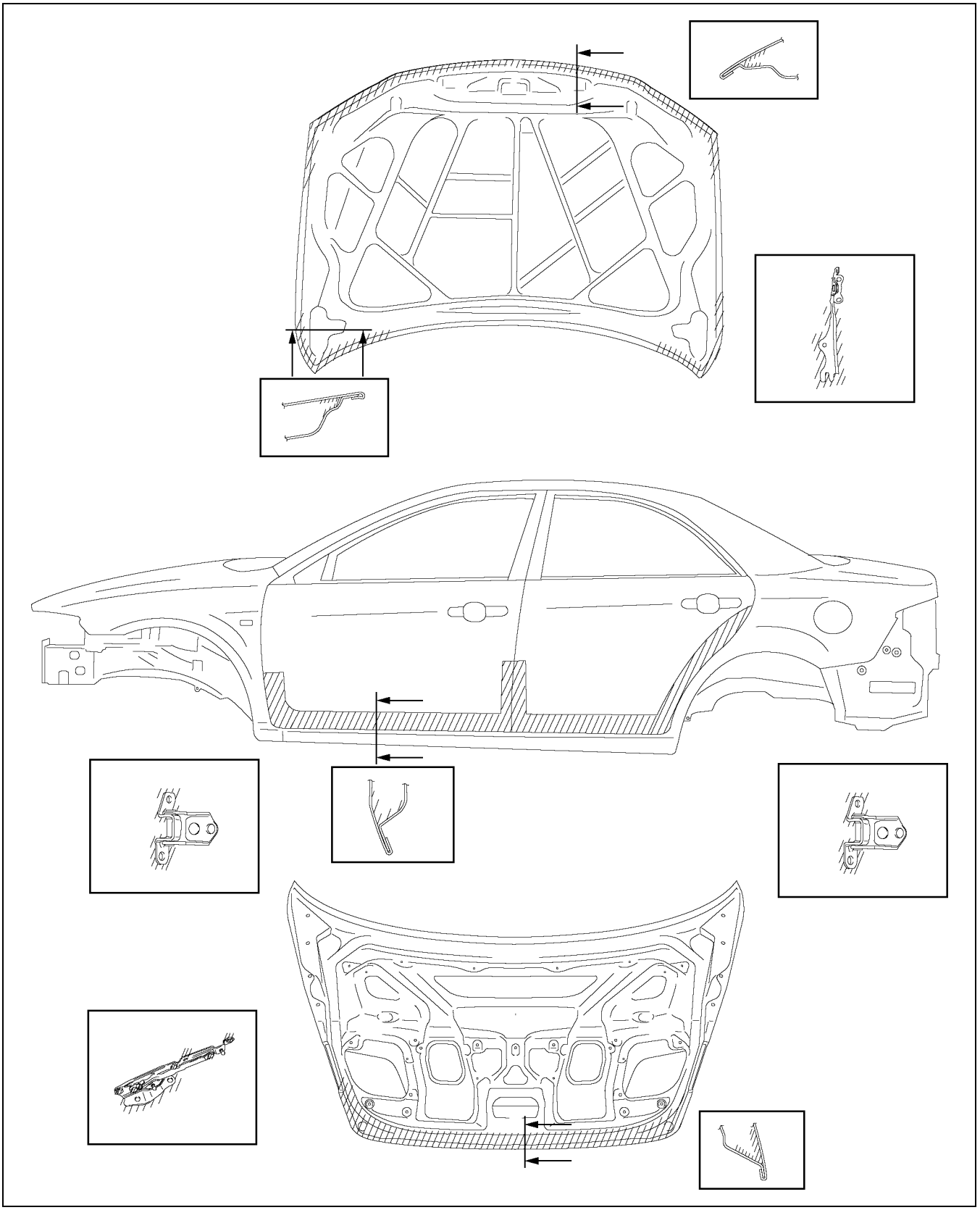

A6E9814B007

5HB

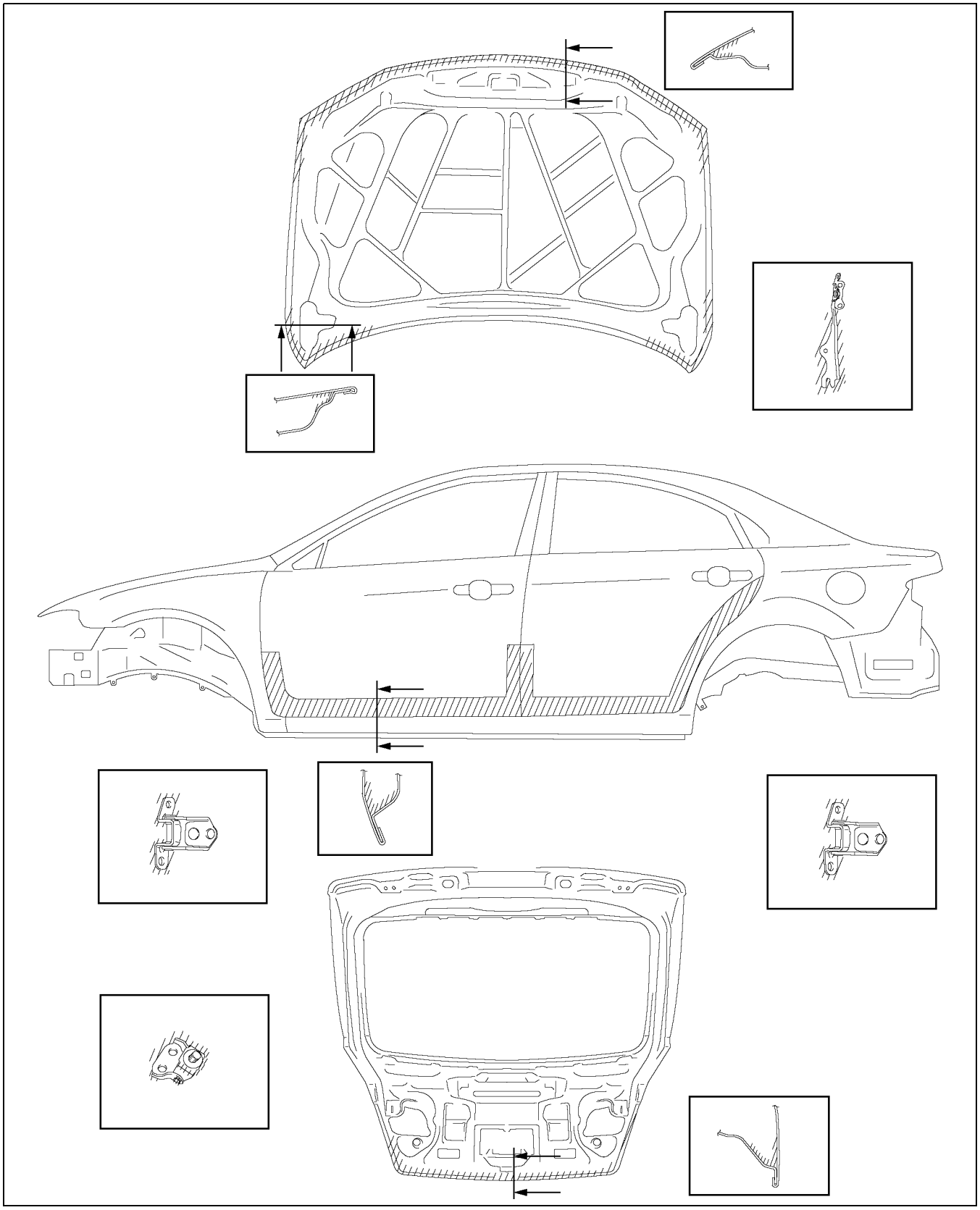

A6E9814B008

DIMENSIONS

DIMENSIONS V-2
UNDERBODY FLAT-PLANE DIMENSIONS..... V-2
UNDERBODY STRAIGHT-LINE DIMENSIONS V-3
FRONT BODY STRAIGHT-LINE DIMENSIONS (1) V-4
FRONT BODY STRAIGHT-LINE DIMENSIONS (2) V-5
CABIN SIDE FRAME STRAIGHT-LINE DIMENSIONS V-6
ROOM STRAIGHT-LINE DIMENSIONS (1) V-8
ROOM STRAIGHT-LINE DIMENSIONS (2) V-9
REAR BODY STRAIGHT-LINE DIMENSIONS .. V-11

DIMENSIONS

UNDERBODY FLAT-PLANE DIMENSIONS

A6E981653010B01

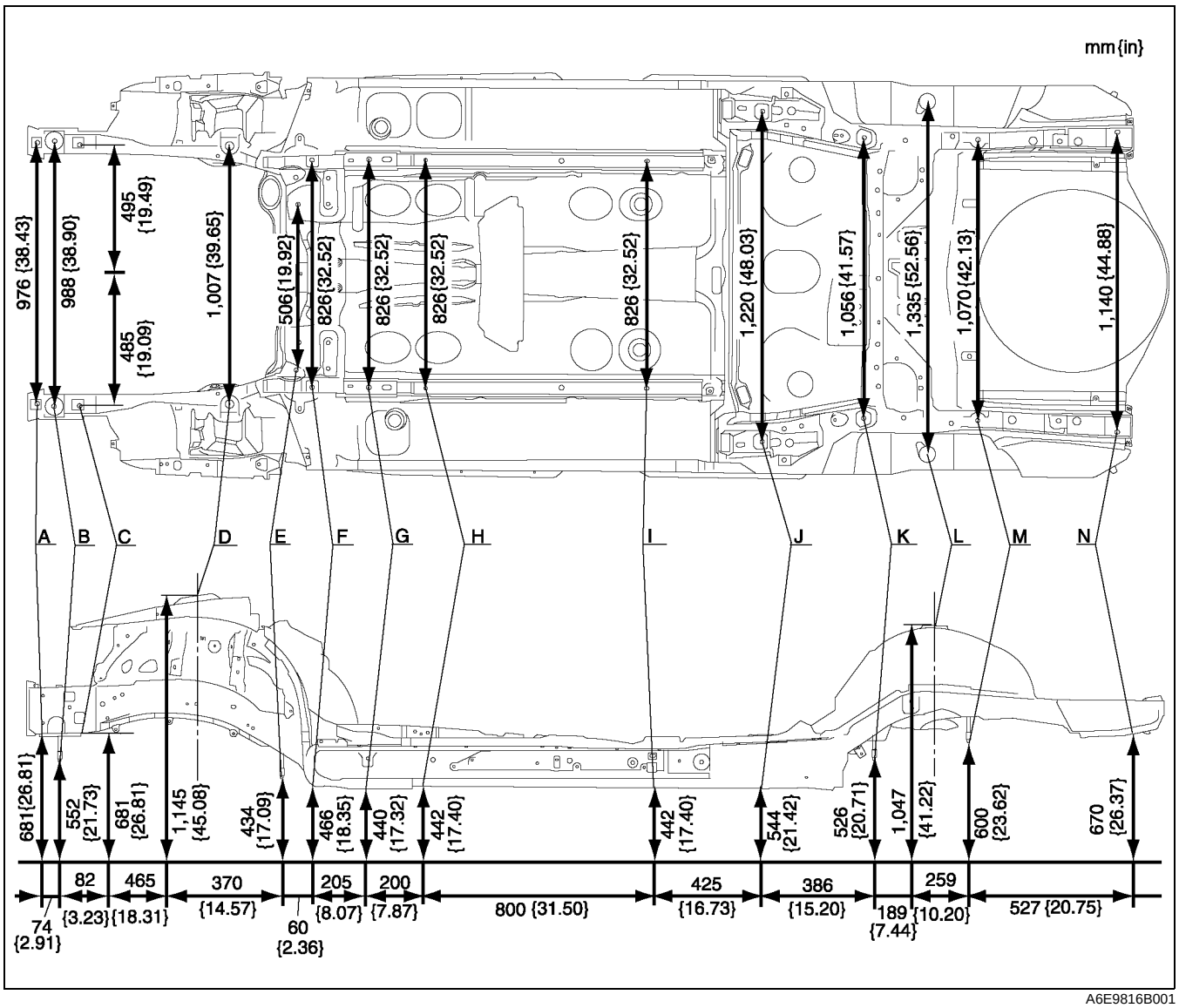

A6E9816B001

Point symbol	Designation	Hole diameter or bolt or nut size mm {in}
A	Front side frame standard hole	ø16 {0.63}
B	Front crossmember mounting bolt	M14 {0.55}
C	Front side frame standard hole	ø16 {0.63}
D	Front suspension mounting block standard hole	ø59 {2.32}
E	Front crossmember mounting bolt	M14 {0.55}
F	Front frame rear standard hole	ø18 {0.71}
G	Front frame rear standard hole	ø16 {0.63}
H	Front B frame standard hole	ø12 {0.47}

Point symbol	Designation	Hole diameter or bolt or nut size mm {in}
I	Front B frame standard hole	14 × 20 {0.55 × 0.79}
J	Rear side frame standard hole	ø20 {0.79}
K	Rear crossmember mounting bolt	M14 {0.55}
L	Rear suspension housing bolt	M6 {0.24}
M	Rear crossmember mounting bolt	M14 {0.55}
N	Rear side frame standard hole	16 × 20 {0.63 × 0.79}

UNDERBODY STRAIGHT-LINE DIMENSIONS

A6E981653010B02

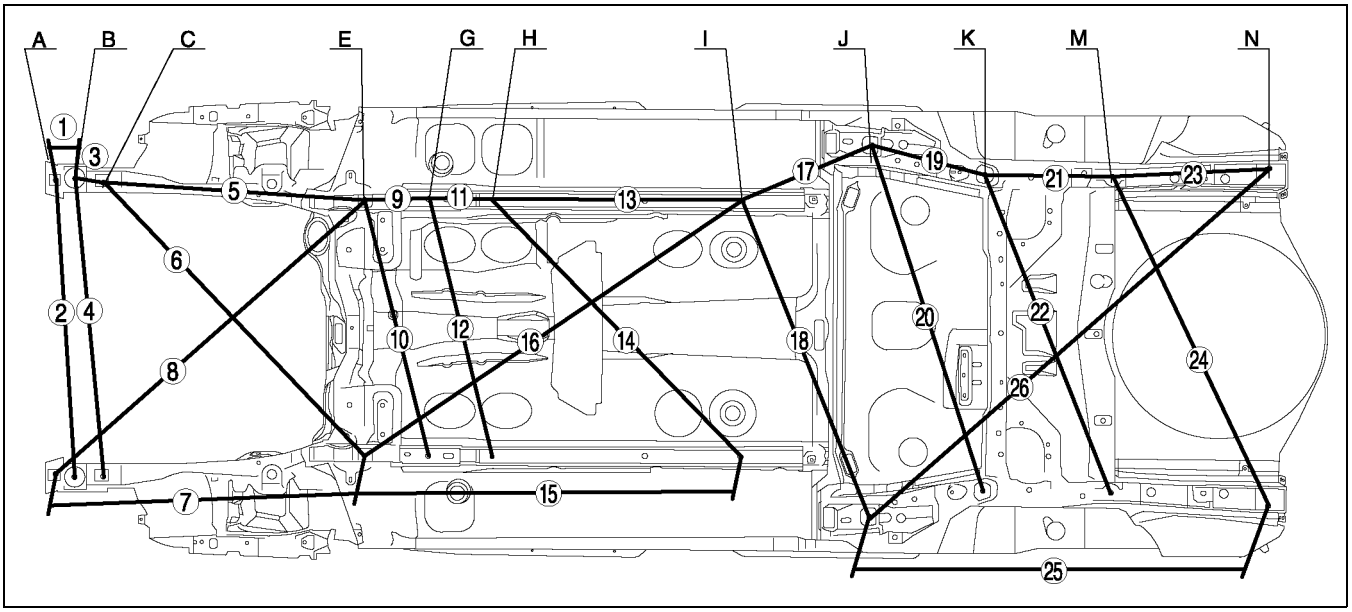

A6E9816B002

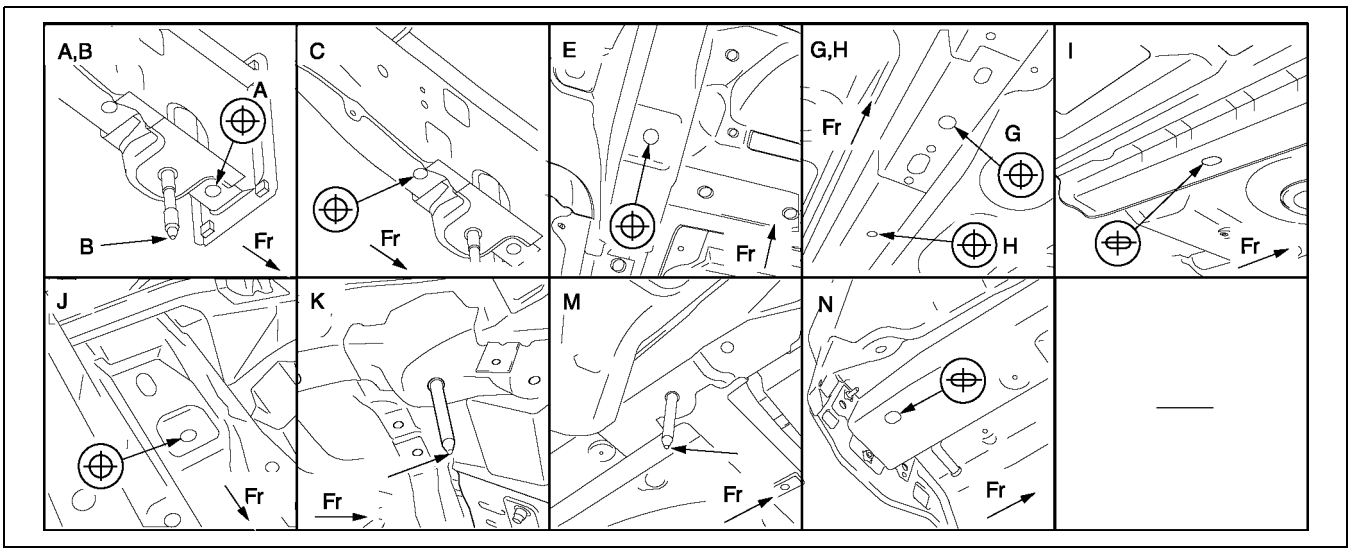

A6E9816B003

Measured location	Dimensions mm {in}
1	149 {5.87}
2	993 {39.09}
3	152 {5.98}
4	991 {39.02}
5	924 {36.38}
6	1,293 {50.91}
7	1,076 {42.36}
8	1,401 {55.16}
9	207 {8.15}
10	851 {33.50}
11	200 {7.87}
12	850 {33.46}
13	800 {31.50}

Measured location	Dimensions mm {in}
14	1,150 {45.28}
15	1,205 {47.44}
16	1,461 {57.52}
17	479 {18.86}
18	1,112 {43.78}
19	395 {15.55}
20	1,202 {47.32}
21	454 {17.87}
22	1,156 {45.51}
23	532 {20.94}
24	1,226 {48.27}
25	1,366 {53.78}
26	1,805 {71.06}

FRONT BODY STRAIGHT-LINE DIMENSIONS (1)

A6E981653020B01

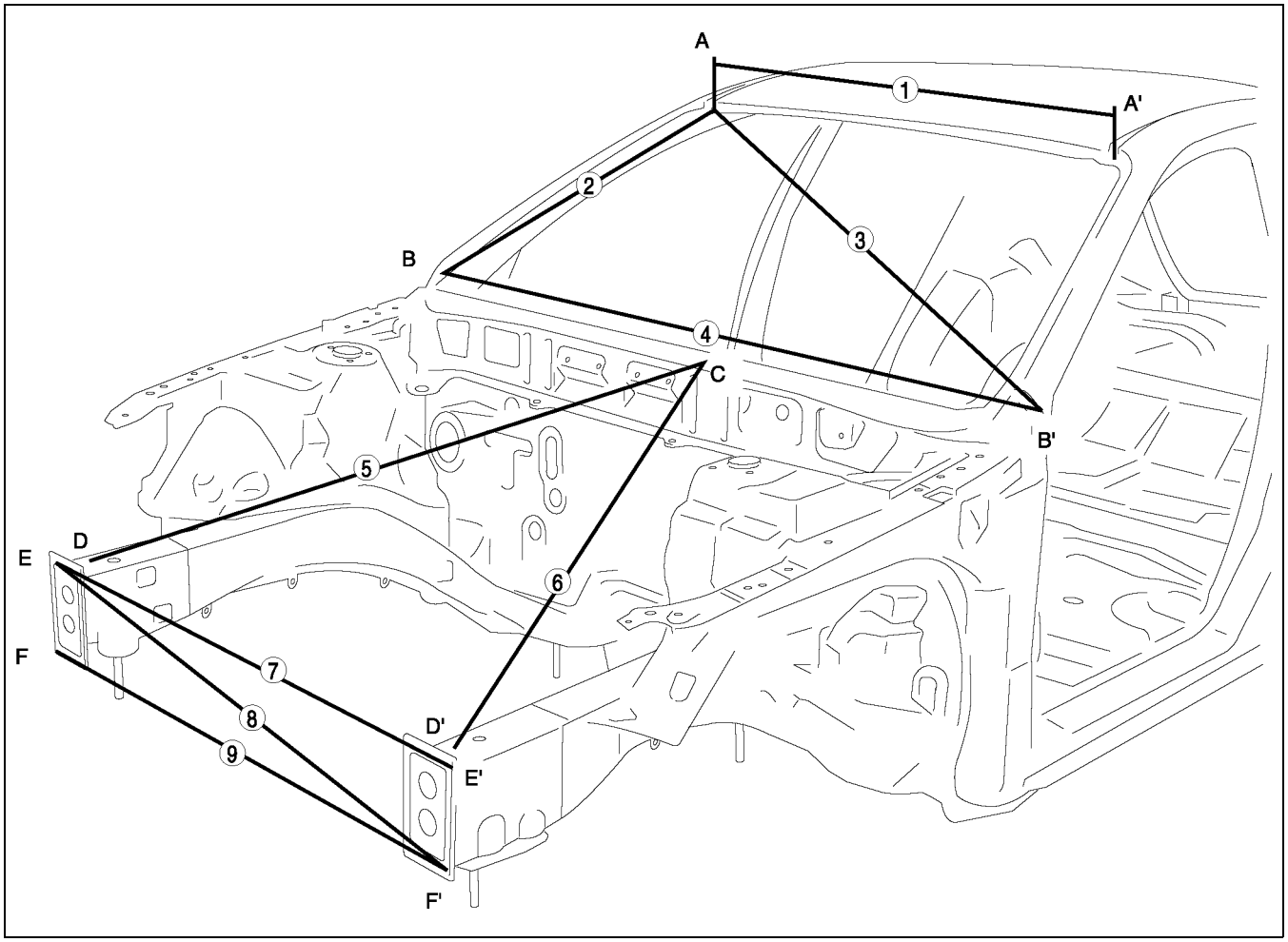

A6E9816B004

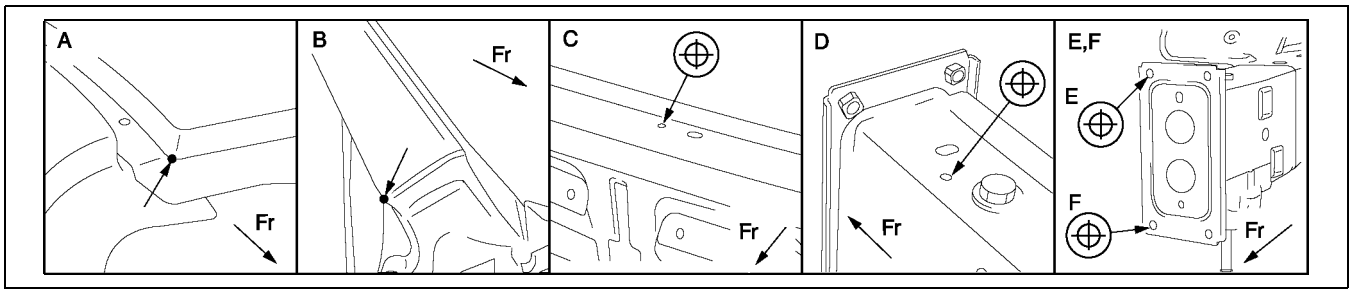

A6E9816B005

Measured location	Dimensions mm {in}
1	1,023 {40.28}
2	749 {29.49}
3	1,458 {57.40}
4	1,529 {60.20}
5	1,070 {42.13}

Measured location	Dimensions mm {in}
6	1,085 {42.72}
7	1,070 {42.13}
8	1,084 {42.68}
9	1,070 {42.13}

FRONT BODY STRAIGHT-LINE DIMENSIONS (2)

A6E981653020B02

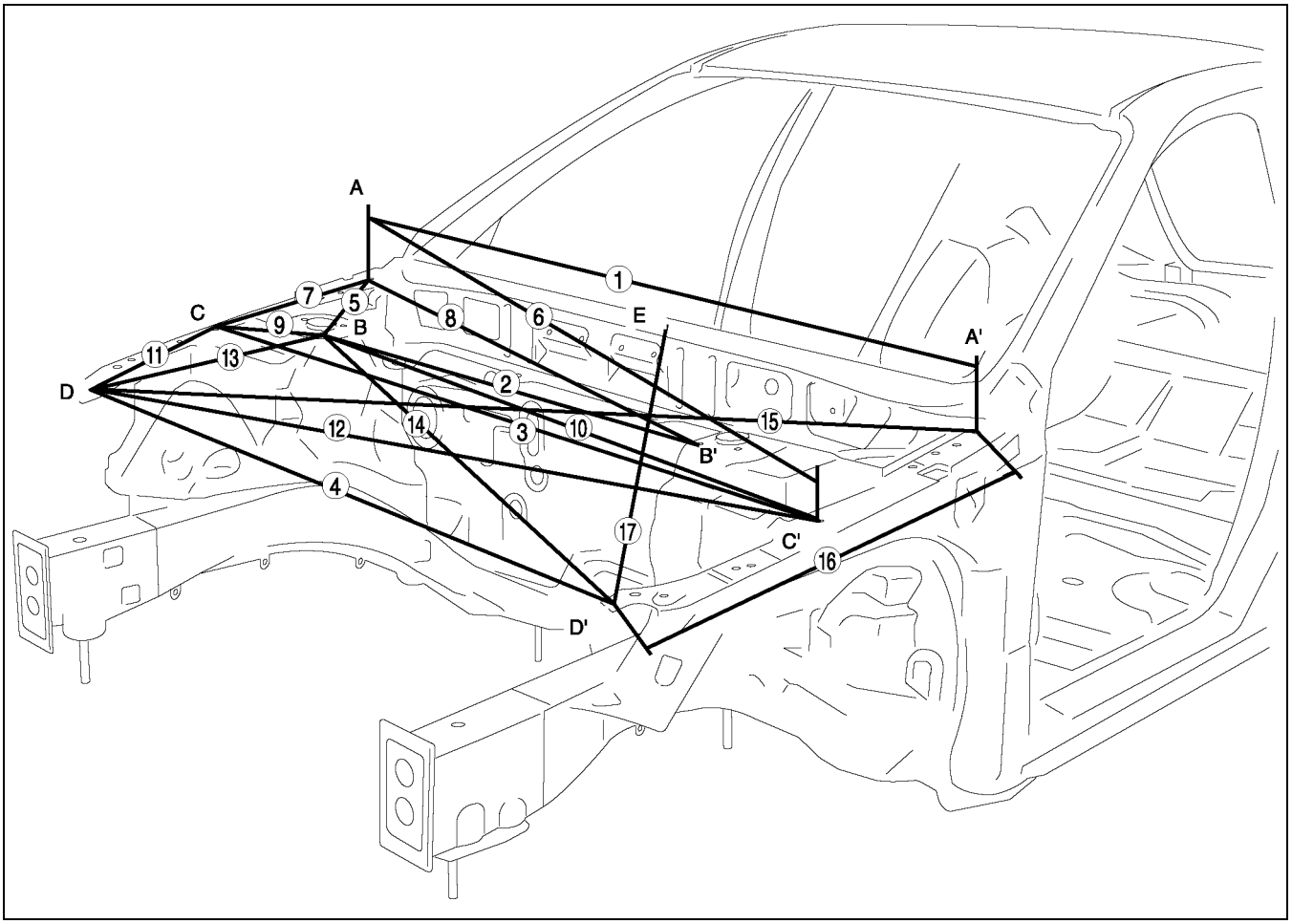

A6E9816B006

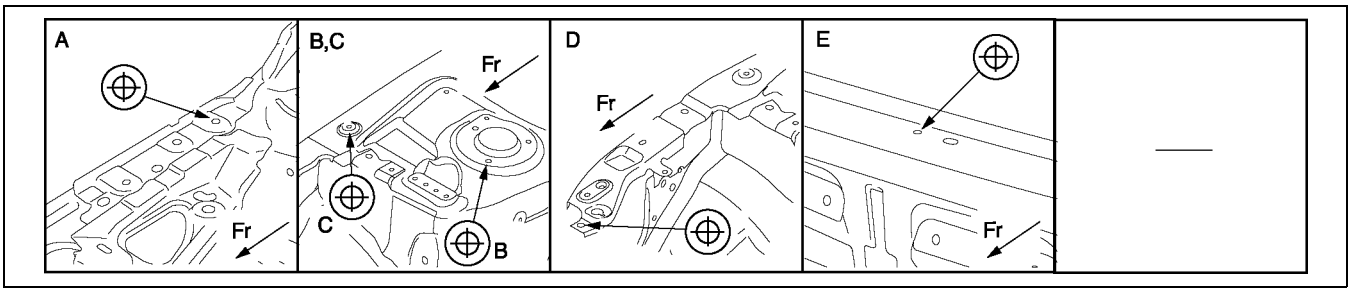

A6E9816B007

Measured location	Dimensions mm {in}
1	1,480 {58.27}
2	959 {37.76}
3	1,481 {58.31}
4	1,340 {52.76}
5	452 {17.80}
6	1,538 {60.55}
7	418 {16.46}
8	1,274 {50.16}
9	268 {10.55}

Measured location	Dimensions mm {in}
10	1,221 {48.07}
11	363 {14.29}
12	1,455 {57.28}
13	451 {17.76}
14	1,220 {48.03}
15	1,608 {63.31}
16	777 {30.59}
17	1,009 {39.72}

CABIN SIDE FRAME STRAIGHT-LINE DIMENSIONS

A6E981670010B01

SEDAN

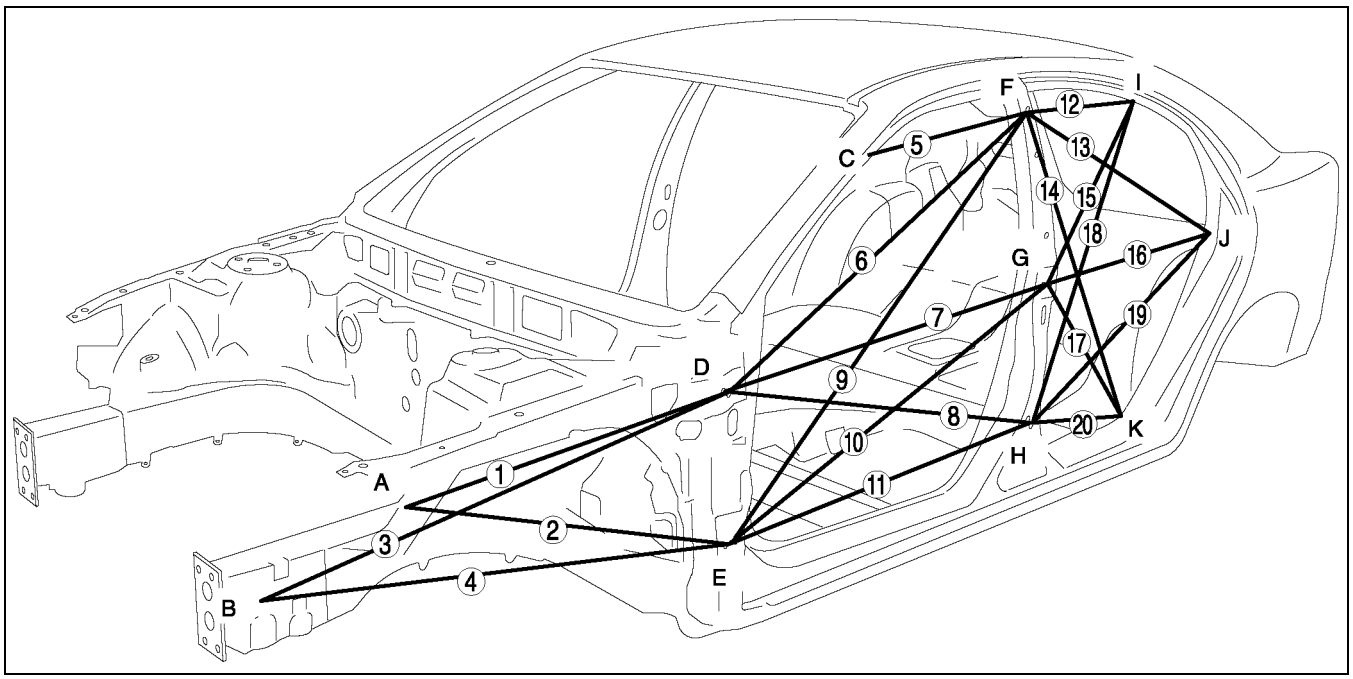

A6E9816B008

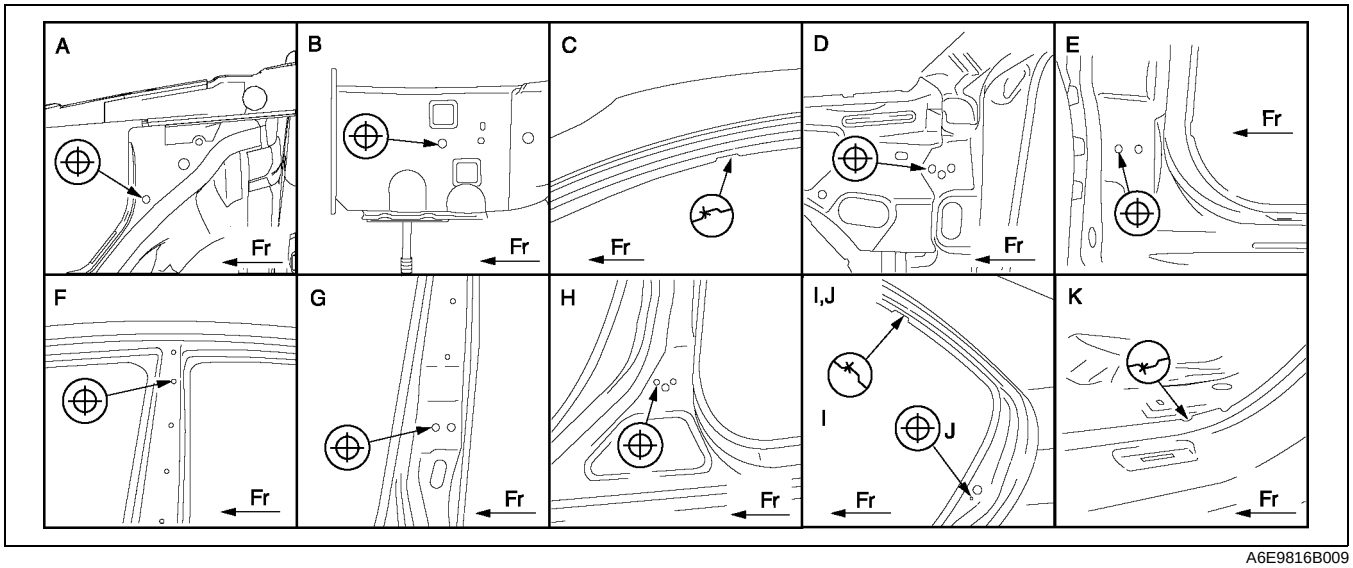

A6E9816B009

Measured location	Dimensions mm {in}
1	692 {27.24}
2	747 {29.41}
3	998 {39.29}
4	968 {38.11}
5	451 {17.76}
6	1,349 {53.11}
7	1,144 {45.04}
8	1,144 {45.04}
9	1,501 {59.09}
10	1,204 {47.40}

Measured location	Dimensions mm {in}
11	1,093 {43.03}
12	662 {26.06}
13	943 {37.13}
14	979 {38.54}
15	864 {34.02}
16	921 {36.26}
17	683 {26.89}
18	1,093 {43.03}
19	1,004 {39.53}
20	536 {21.10}

5HB

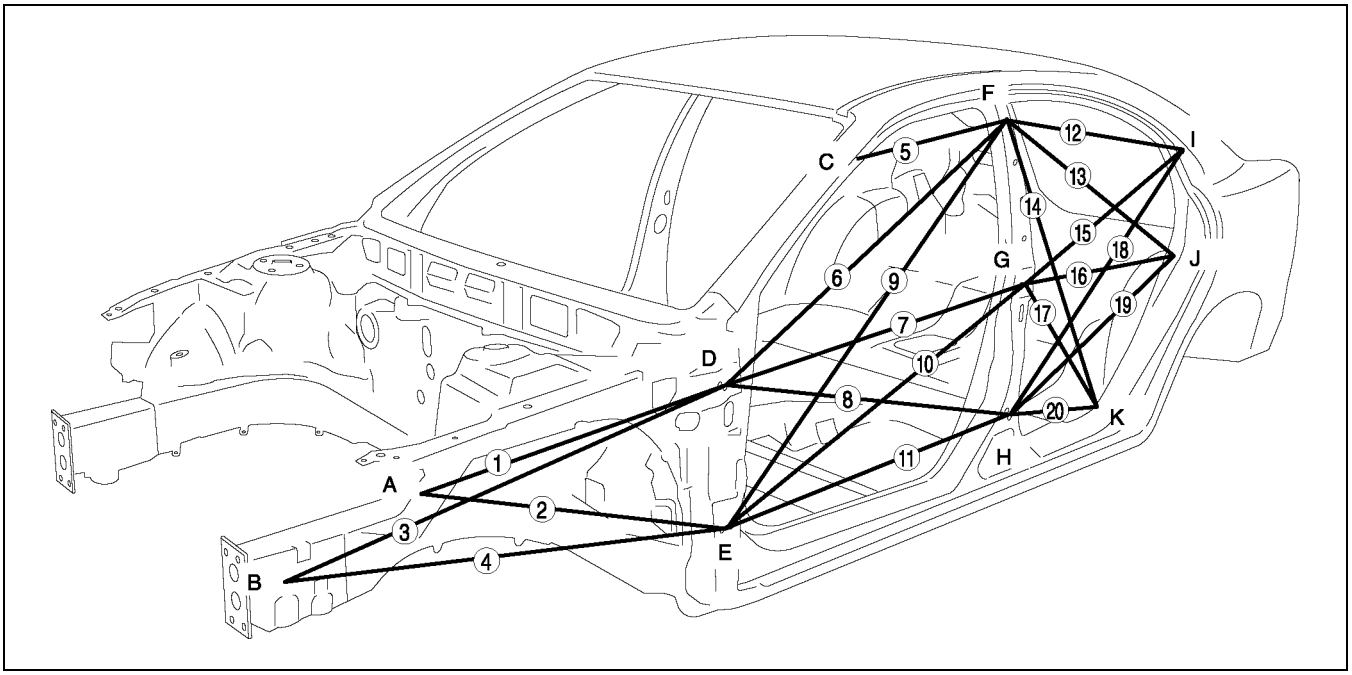

A6E9816B010

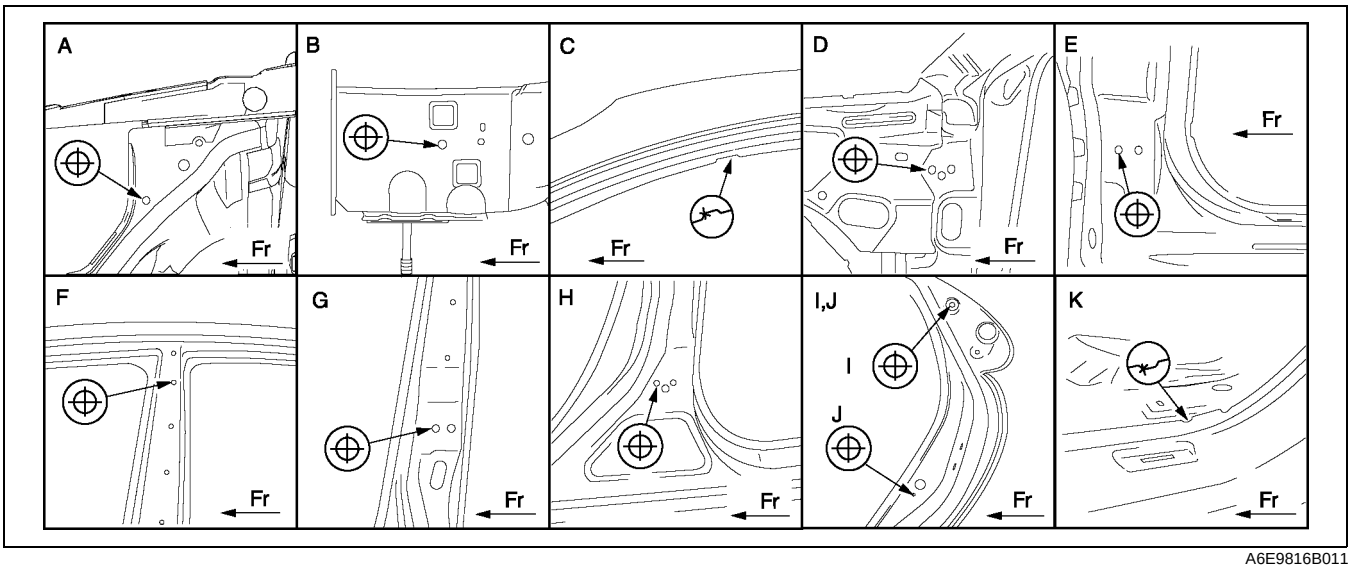

A6E9816B011

Measured location	Dimensions mm {in}
1	692 {27.24}
2	747 {29.41}
3	998 {39.29}
4	968 {38.11}
5	451 {17.76}
6	1,349 {53.11}
7	1,144 {45.04}
8	1,144 {45.04}
9	1,501 {59.09}
10	1,204 {47.40}

Measured location	Dimensions mm {in}
11	1,093 {43.03}
12	908 {35.75}
13	943 {37.13}
14	979 {38.54}
15	1,050 {41.34}
16	921 {36.26}
17	683 {26.89}
18	1,231 {48.46}
19	1,004 {39.53}
20	536 {21.10}

ROOM STRAIGHT-LINE DIMENSIONS (1)

A6E981670001B01

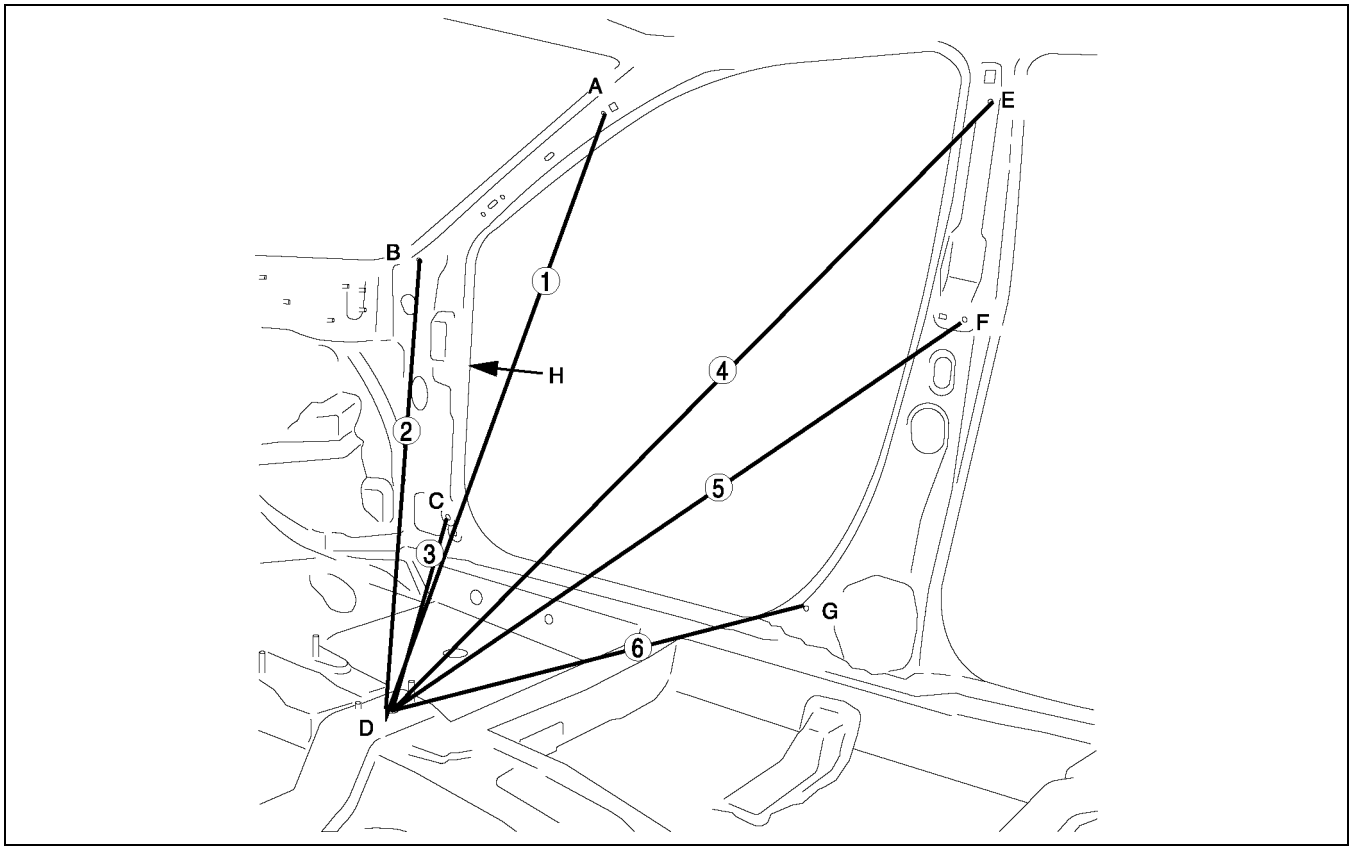

A6E9816B012

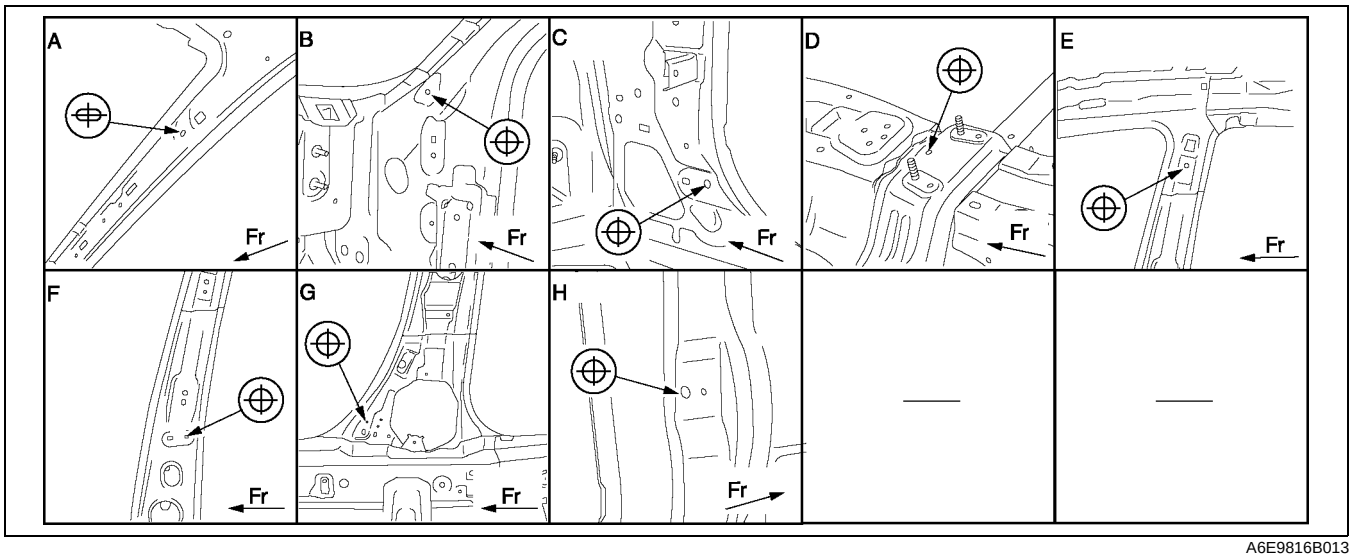

A6E9816B013

Measured location	Dimensions mm {in}
1	1,024 {40.31}
2	1,098 {43.23}
3	920 {36.22}
4	1,175 {46.26}

Measured location	Dimensions mm {in}
5	1,010 {39.76}
6	767 {30.20}
H-H'	1,487 {58.54}

ROOM STRAIGHT-LINE DIMENSIONS (2)

A6E981670001B02

SEDAN

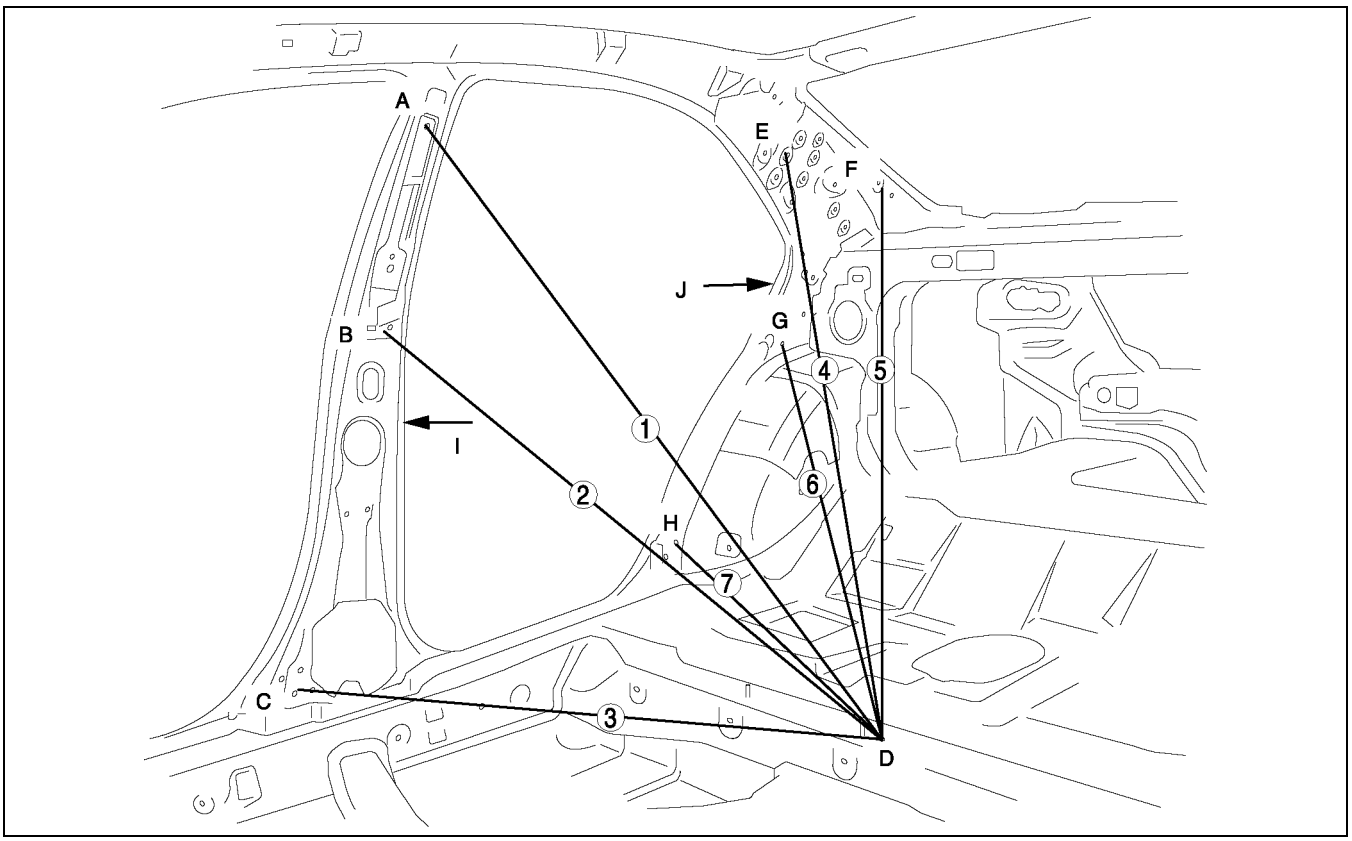

A6E9816B014

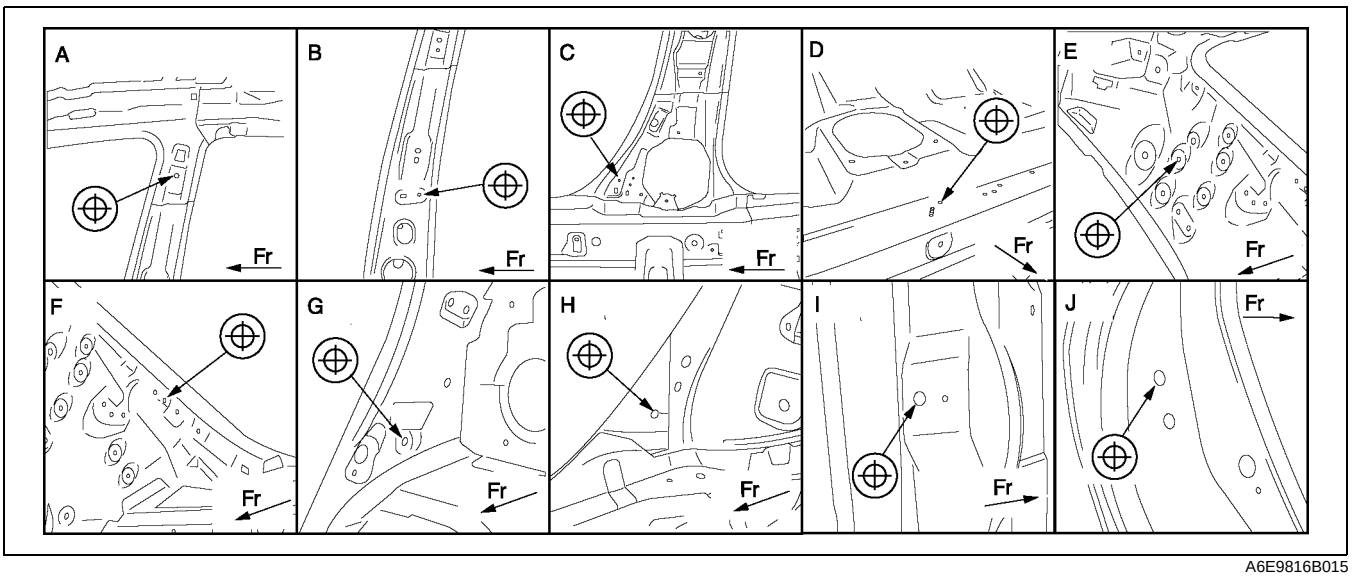

A6E9816B015

Measured location	Dimensions mm {in}
1	RH:1,141 {44.92}, LH:1,104 {43.46}
2	RH:996 {39.21}, LH:946 {37.24}
3	RH:952 {37.48}, LH:897 {35.31}
4	RH:1,193 {46.97}, LH:1,157 {45.55}
5	RH:1,285 {50.59}, LH:1,252 {49.29}

Measured location	Dimensions mm {in}
6	RH:1.079 {42.48}, LH:1,030 {40.55}
7	RH:833 {32.80}, LH:767 {30.20}
I-I'	1,584 {62.36}
J-J'	1,557 {61.30}

5HB

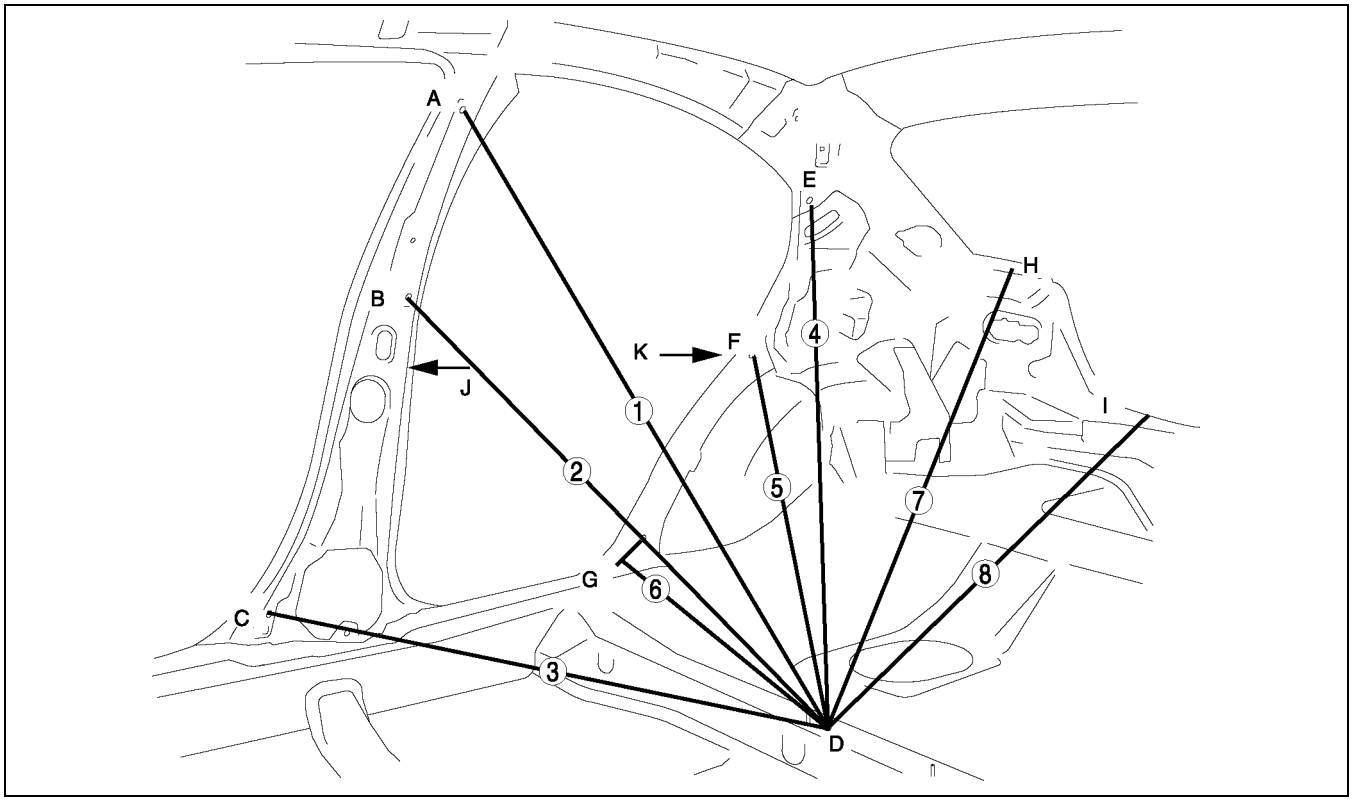

A6E9816B016

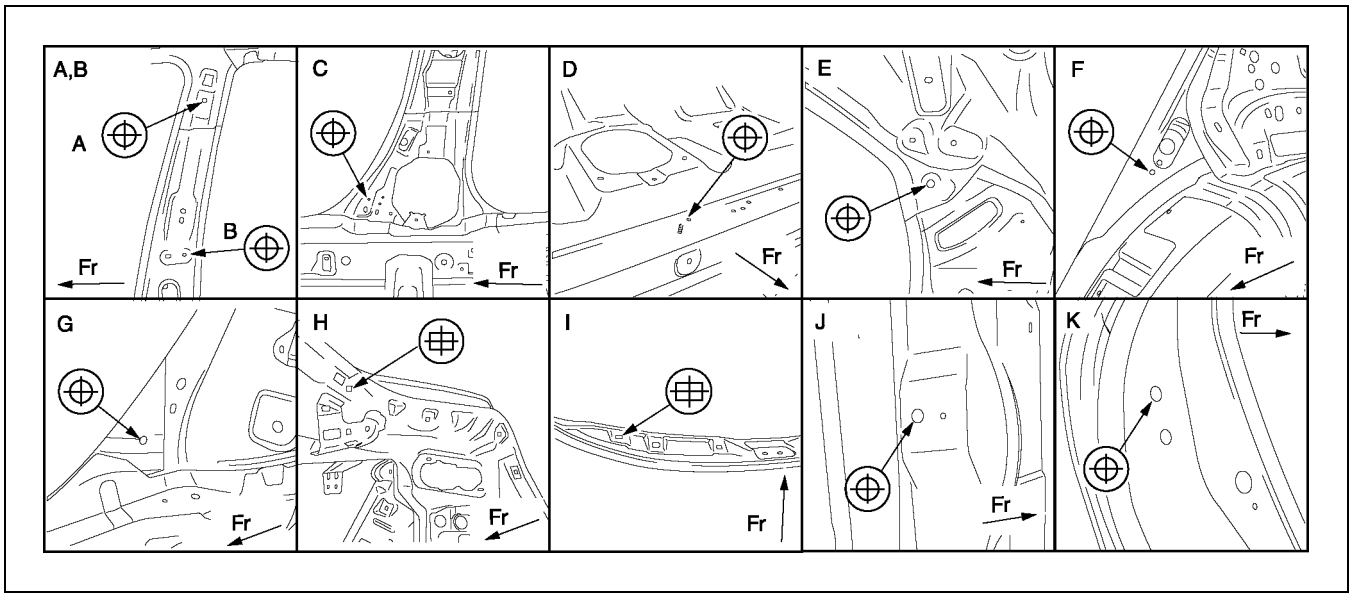

A6E9816B017

Measured location	Dimensions mm {in}
1	RH:1,141 {44.92}, LH:1,104 {43.46}
2	RH:996 {39.21}, LH:946 {37.24}
3	RH:952 {37.48}, LH:897 {35.31}
4	RH:1,204 {47.40}, LH:1,166 {45.91}
5	RH:1,027 {40.43}, LH:976 {38.43}

Measured location	Dimensions mm {in}
6	RH:833 {32.80}, LH:767 {30.20}
7	RH:1,402 {55.20}, LH:1,374 {54.09}
8	RH:1,671 {65.79}, LH:1,657 {65.24}
J-J'	1,584 {62.36}
K-K'	1,557 {61.30}

REAR BODY STRAIGHT-LINE DIMENSIONS

A6E981670002B01

SEDAN

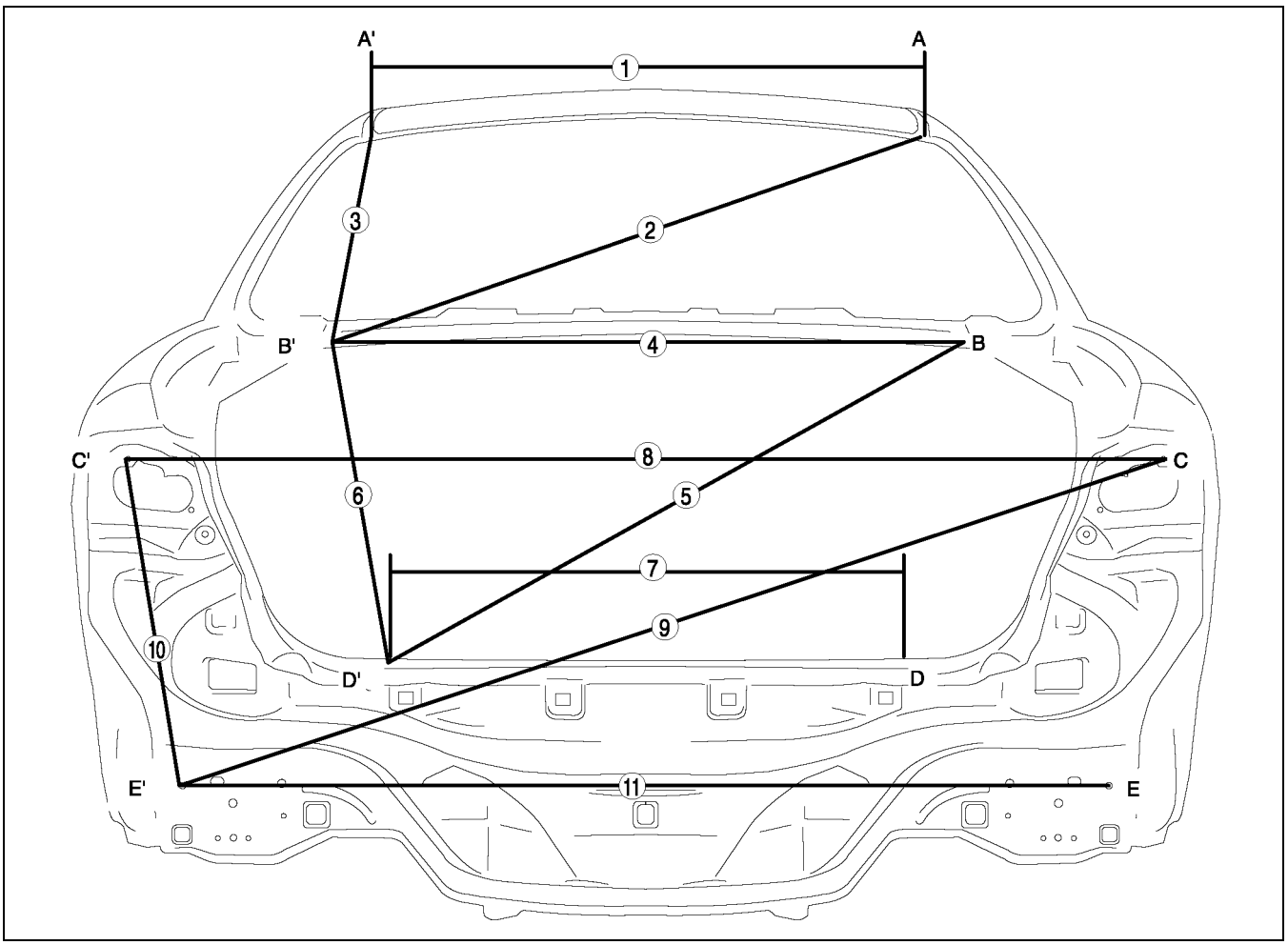

A6E9816B018

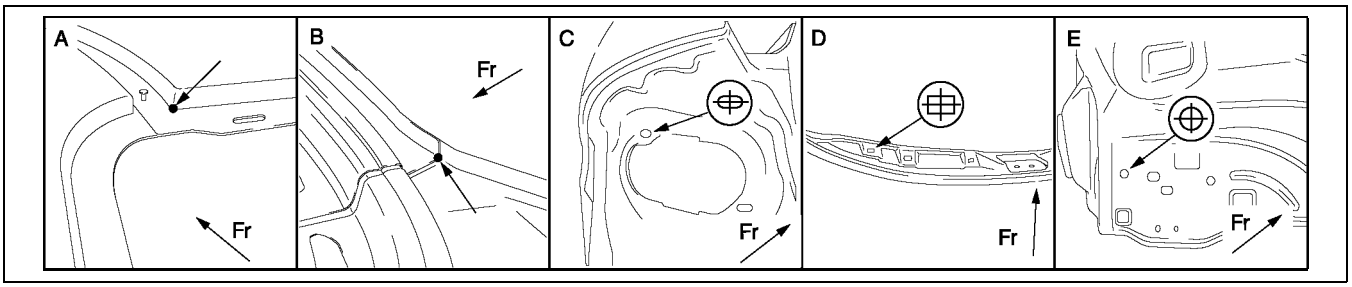

A6E9816B019

Measured location	Dimensions mm {in}
1	1,013 {39.88}
2	1,273 {50.12}
3	826 {32.52}
4	928 {36.54}
5	969 {38.15}
6	555 {21.85}

Measured location	Dimensions mm {in}
7	680 {26.77}
8	1,402 {55.20}
9	1,388 {54.65}
10	452 {17.80}
11	1,228 {48.35}

5HB

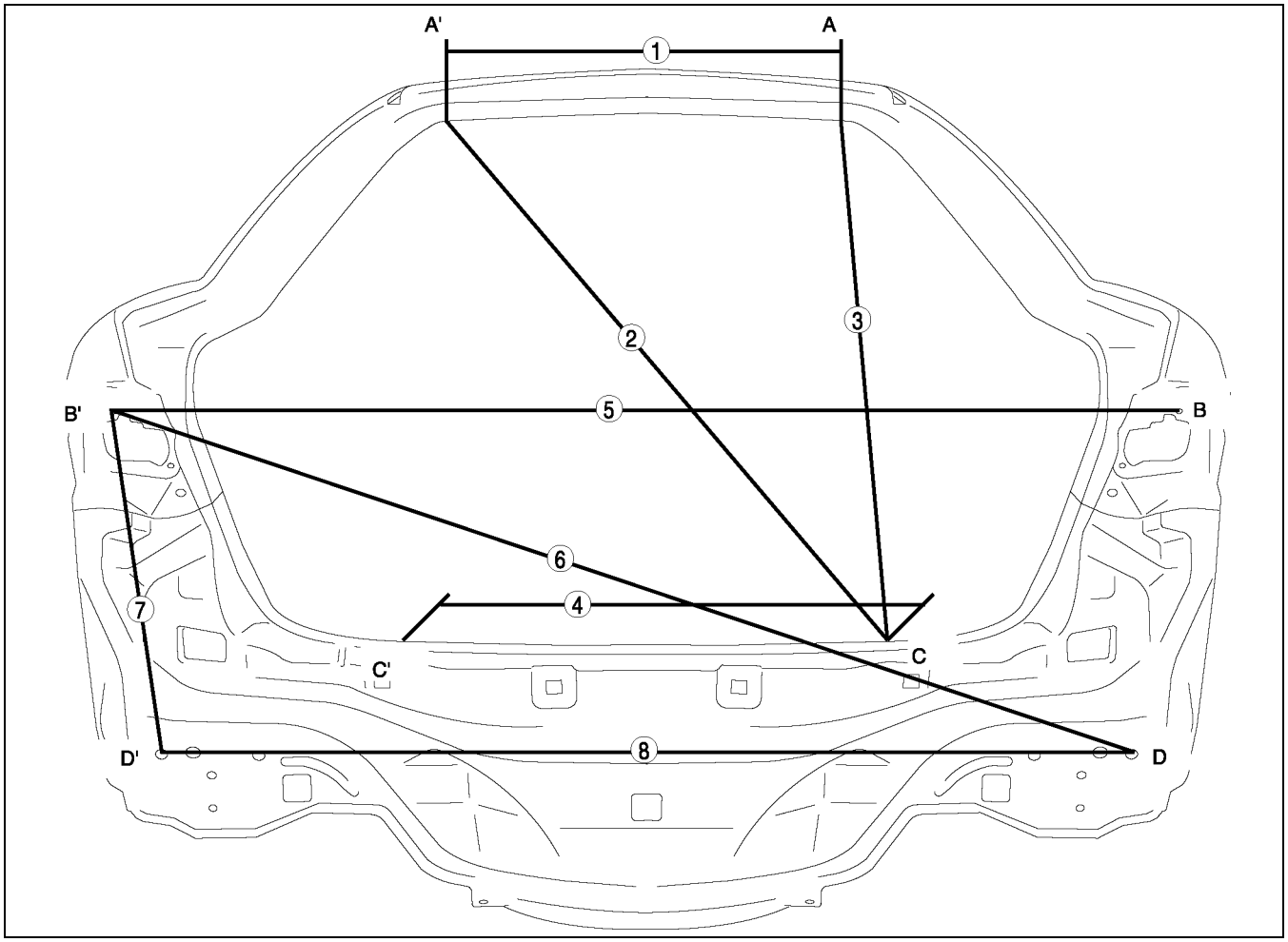

A6E9816B020

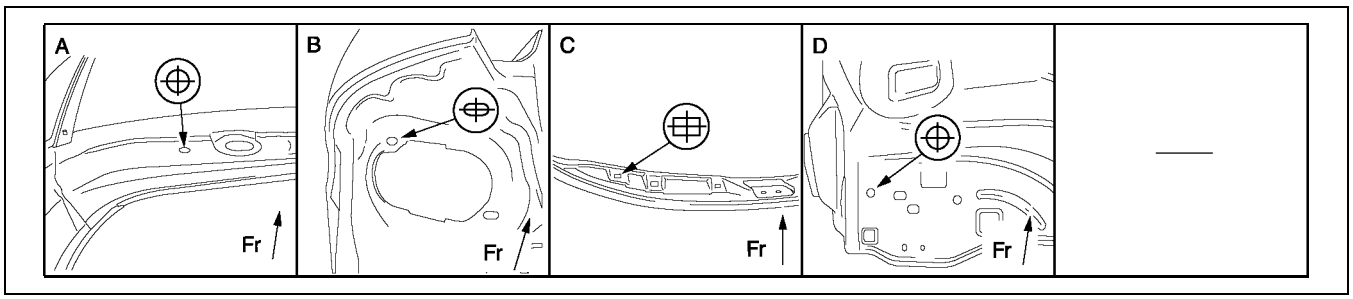

A6E9816B021

Measured location	Dimensions mm {in}
1	700 {27.56}
2	1,436 {56.54}
3	1,260 {49.61}
4	680 {26.77}

Measured location	Dimensions mm {in}
5	1,402 {55.20}
6	1,388 {54.65}
7	452 {17.80}
8	1,228 {48.35}

PLASTIC BODY PARTS

PLASTIC BODY PARTS VI-2
PLASTIC PARTS HEAT RESISTING TEMPERATURE VI-2
REPAIRABLE RANGE OF POLYPROPYLENE BUMPERS VI-3
POLYPROPYLENE BUMPER REPAIR VI-4
PROCEDURE VI-5

PLASTIC BODY PARTS

PLASTIC PARTS HEAT RESISTING TEMPERATURE

A6E981850000B01

Part Name		Code	Material Name	Heat resisting TemperatureC°{F°}
WINDSHIELD MOULDING		PVC	POLYVINYLCHLORIDE	95 {203}
COWL GRILLE		PP	POLYPROPYLENE	95 {203}
FRONT COMBINATION LIGHT	LENS	PC	POLYCARBONATE	130 {266}
	HOUSING	PBT	PBT	120 {248}
RADIATOR GRILLE	GRILLE	ABS	ABS	90 {194}
	REINFORCE-MENT	PP	POLYPROPYLENE	95 {203}
FRONT BUMPER		PP	POLYPROPYLENE	100 {212}
FRONT SIDE TURN LIGHT	LENS	PMMA	ACRYLIC	75 {167}
	HOUSING	PC-PBT	POLYPROPYLENE-PBT	120 {248}
OUTSIDE MIRROR	HOUSING	ABS	ABS	95 {200}
	BASE	PBT	PBT	200 {395}
	BLACK	AES	AES	75 {167}
	BODY COLOR	ABS	ABS	90 {194}
	MIRROR HOLDER	PP	POLYPROPYLENE	50 {122}
REAR COMBINATION LIGHT	LENS	PMMA	ACRYLIC	80 {167}
	HOUSING	AES	AES	70 {158}
REAR BUMPER		PP	POLYPROPYLENE	100 {212}
REAR FINISHER		ABS	ABS	90 {194}
HIGH-MOUNT BRAKE LIGHT(5HB)		PC	POLYCARBONATE	130 {266}
ROOF MOULDING		PVC	POLYVINYLCHLORIDE	95 {203}
BELTLINE MOLDING		PVC	POLYVINYLCHLORIDE	95 {203}
REAR SPOILER		ABS	ABS	90 {194}
SHROUD PANEL		PP	POLYPROPYLENE	100 {212}

Note

- The application of temperatures higher then heat resisting temperatures may result in part deformation.

REPAIRABLE RANGE OF POLYPROPYLENE BUMPERS

A6E981850010B01

The three types of damaged bumpers shown below are considered repairable. Although a bumper which has been damaged greater than this could also be repaired, it should be replaced with a new one because such repair would detract from the looks and quality of the bumper. In addition, such repair is not considered reasonable in terms of work time.

Repairable Bumpers

1. A bumper with a hole less than 50 mm {1.97 in} in diameter.

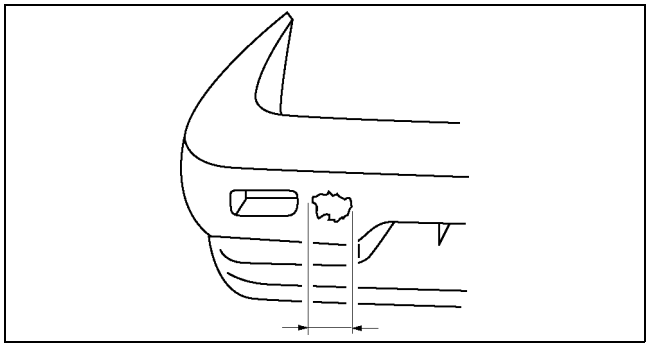

YMU980PCM

2. A bumper with a crack less than 100 mm {3.94 in} in length.

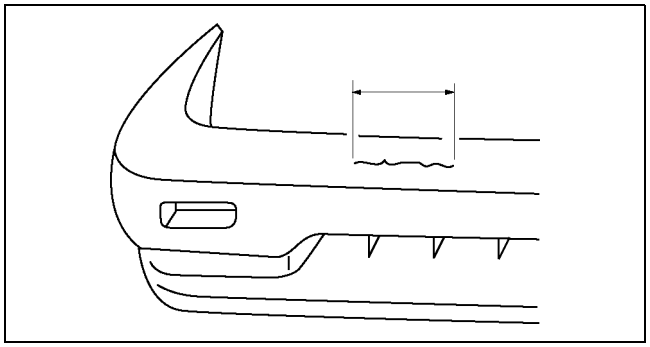

YMU980PCN

3. A bumper with a crack less than 100 mm {3.94 in} in length that is less than half of the width of the bumper.

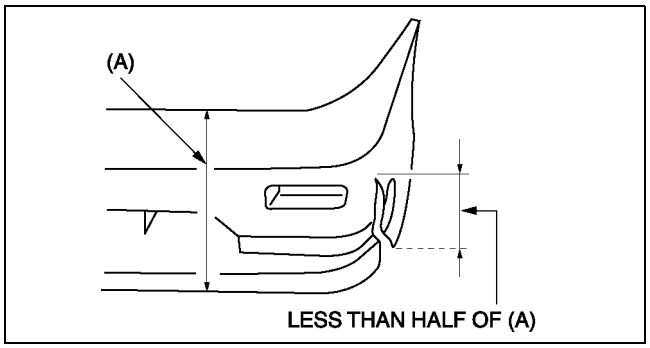

YMU980PCP

VI

POLYPROPYLENE BUMPER REPAIR

A6E981850010B02

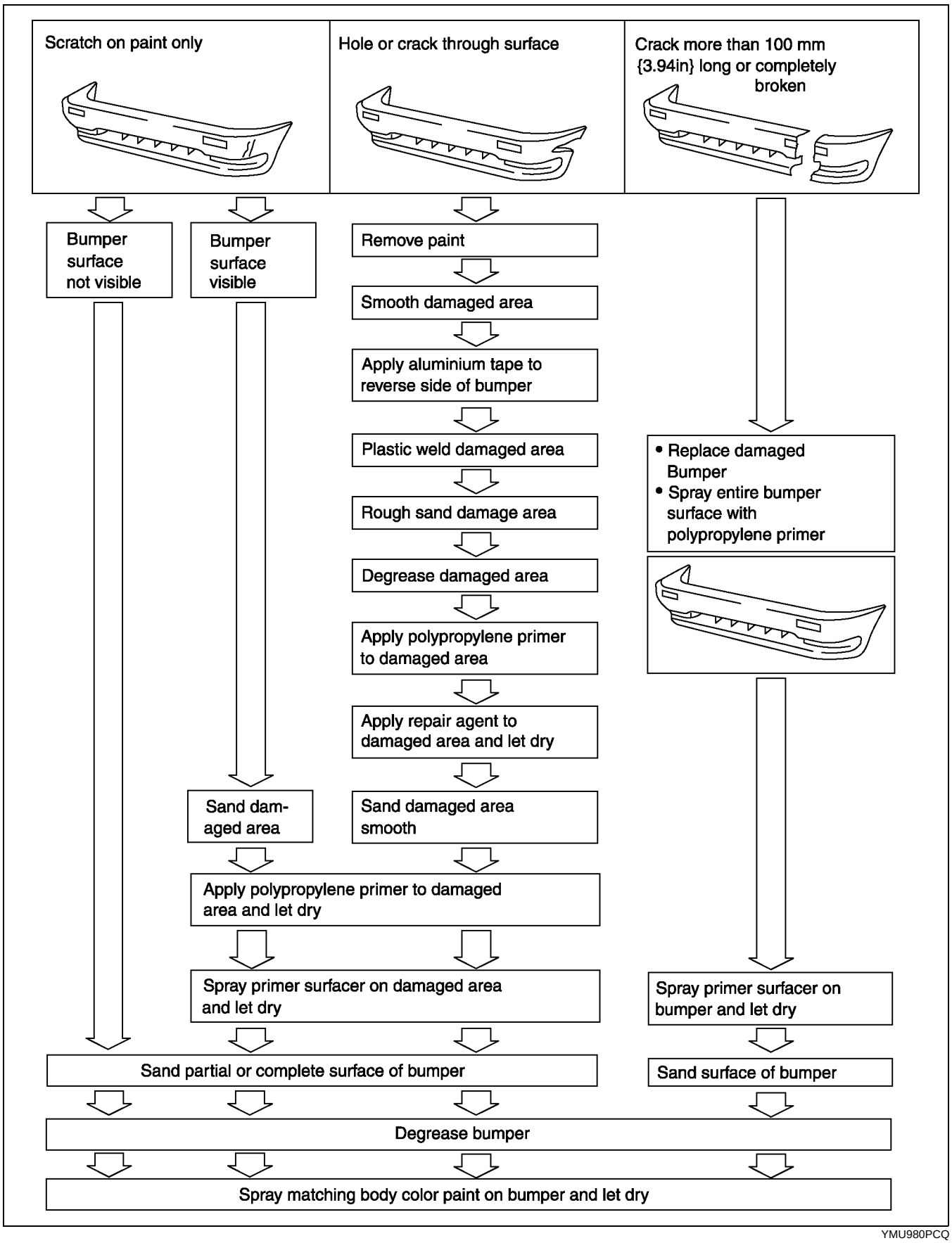

YMU980PCQ

PROCEDURE

A6E981850010B03

Repair of polypropylene bumpers having damage that has reached the surface of the polypropylene and are too serious to be restored by painting only.

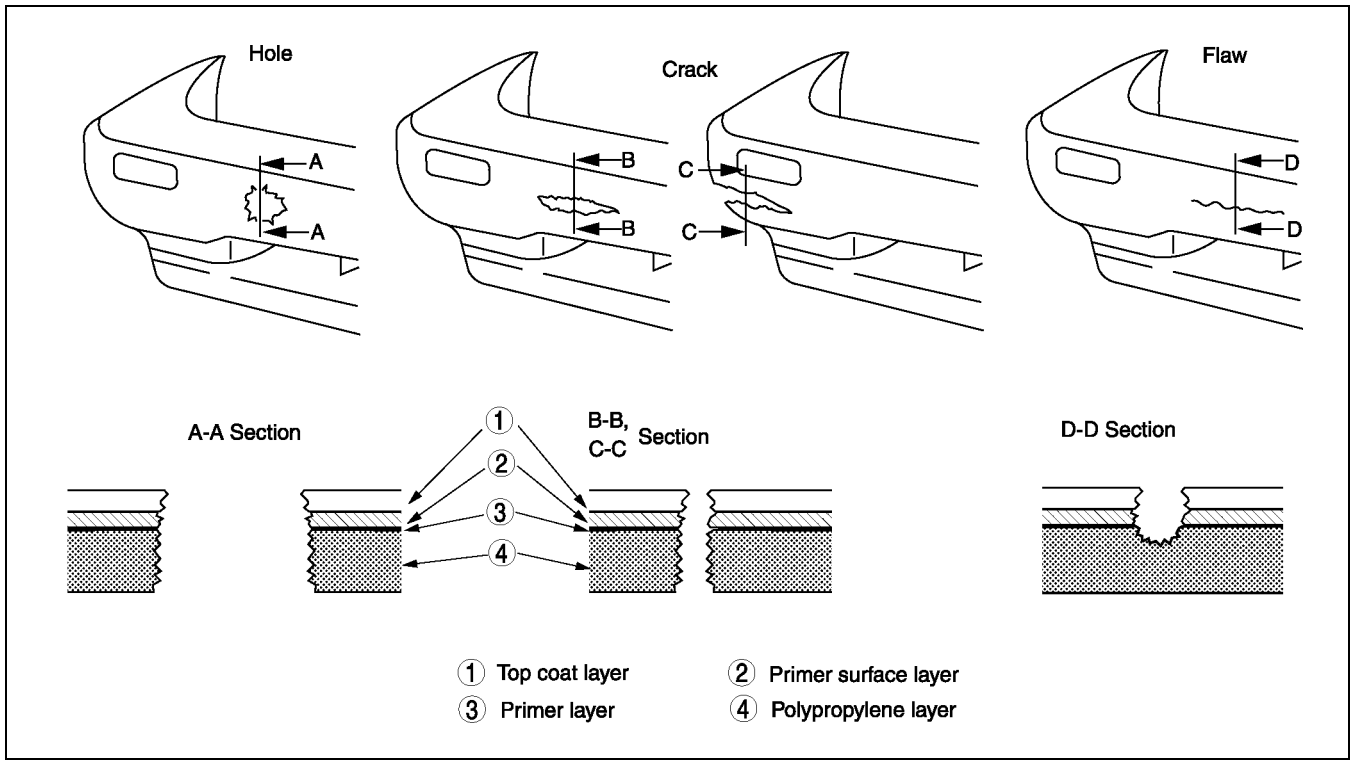

ZUA9818B001

1. Cut the rough edges around the damage with a knife to make it smooth. Sand the area with a sander to make an angle of about 45°.

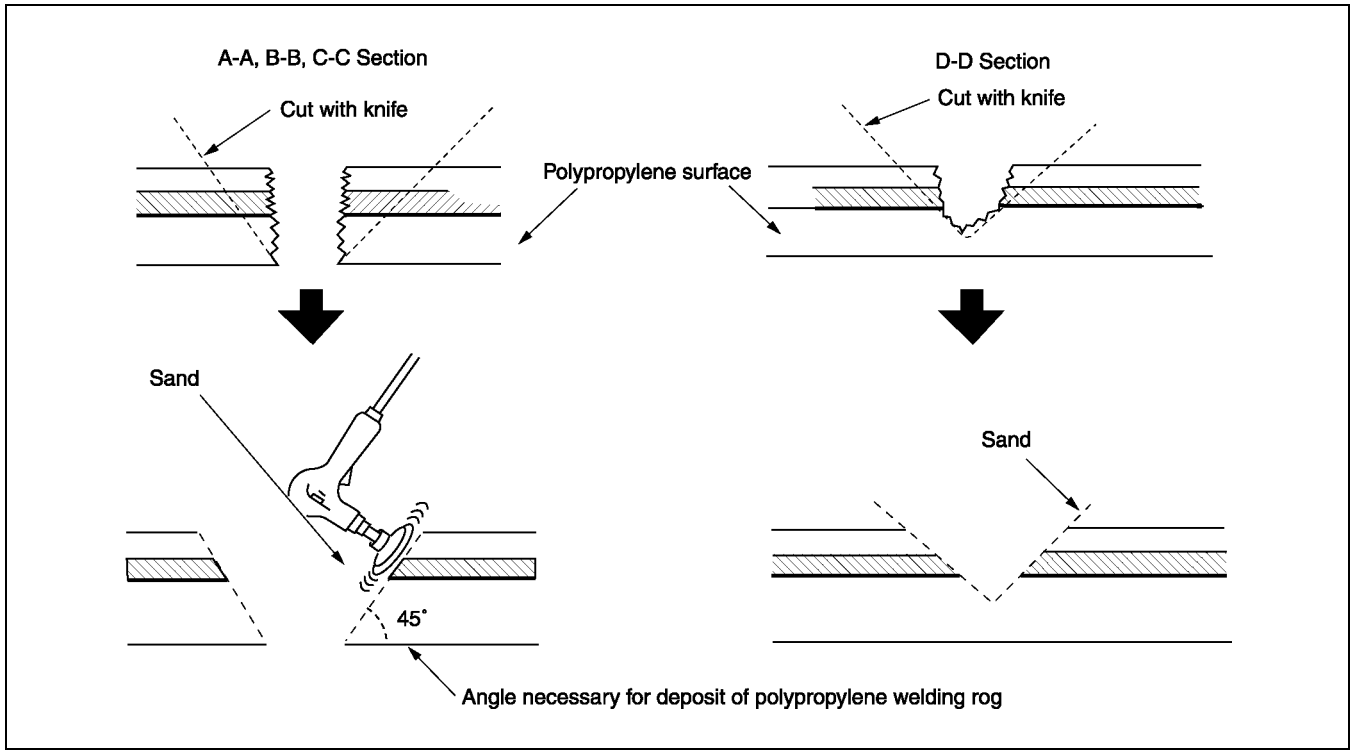

ZUA9818B002

2. Weld the damaged area.
   - For repair of a cracked area, melt the crack together with a heat gun and a melting attachment.

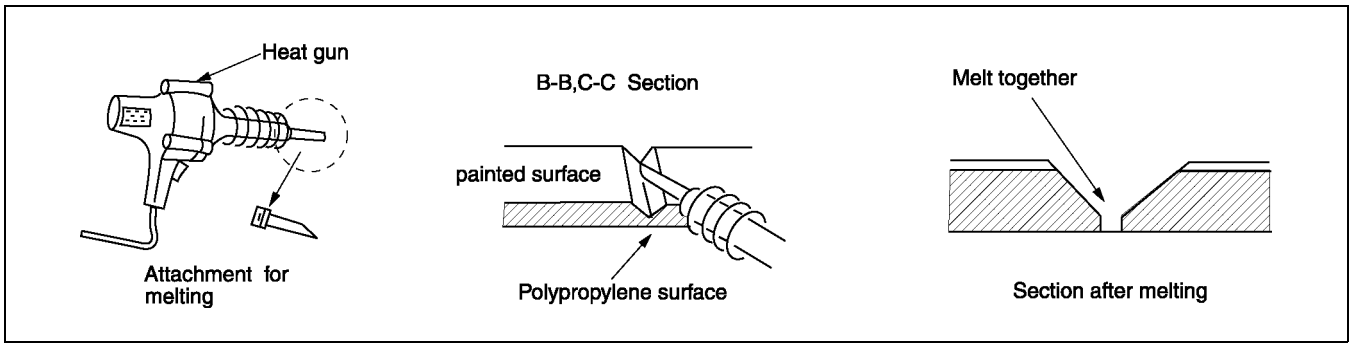

ZUA9818B003

   - For repair of a hole, degrease the area on both sides of the bumper and apply aluminium tape on the reverse side of the damage area.

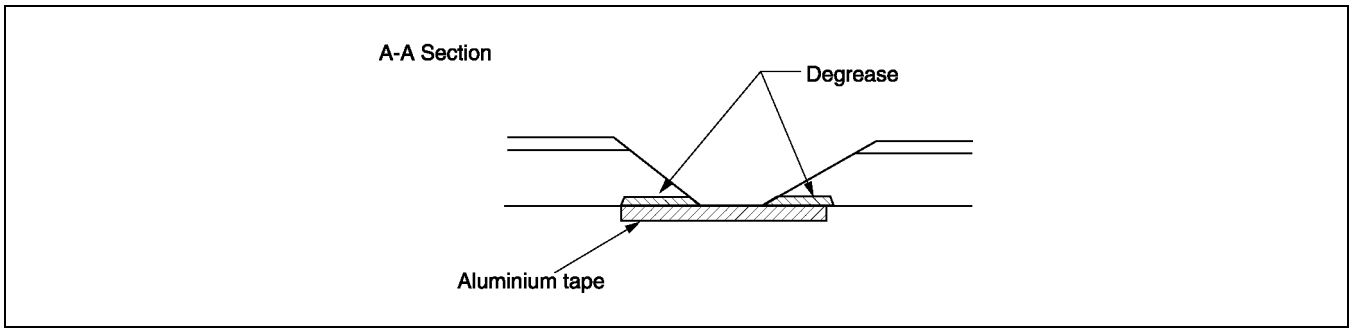

ZUA9818B005

3. Melt the polypropylene welding rod with a heat gun and deposit it the cracked area.

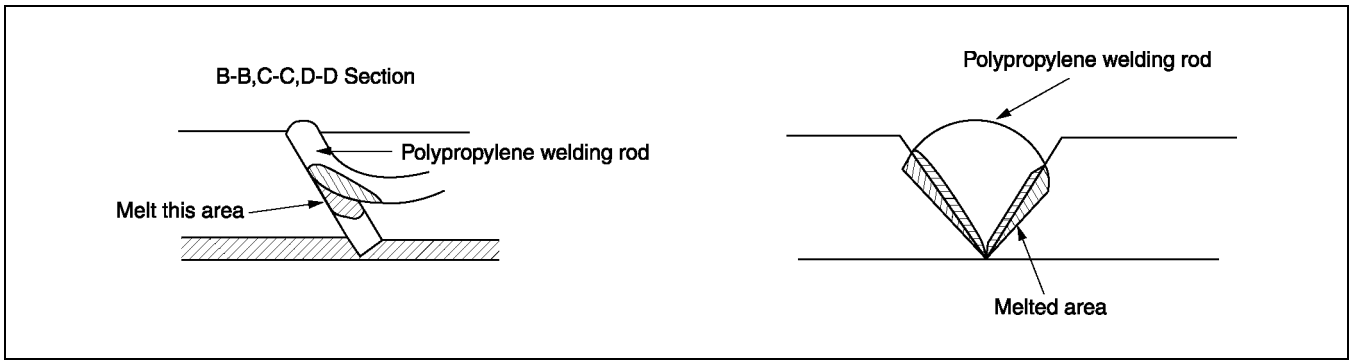

ZUA9818B004

Note
- Heat the shaded area to melt it.
- Take care not to overlay melt welding rod. If the part is welded with the welding rod melted like jelly, the welding strength will be reduced.
- Hold the heat gun 10—20 mm {0.39—0.79 in} from the part being welded.
- Do not move the welding rod until the welded parts cool.

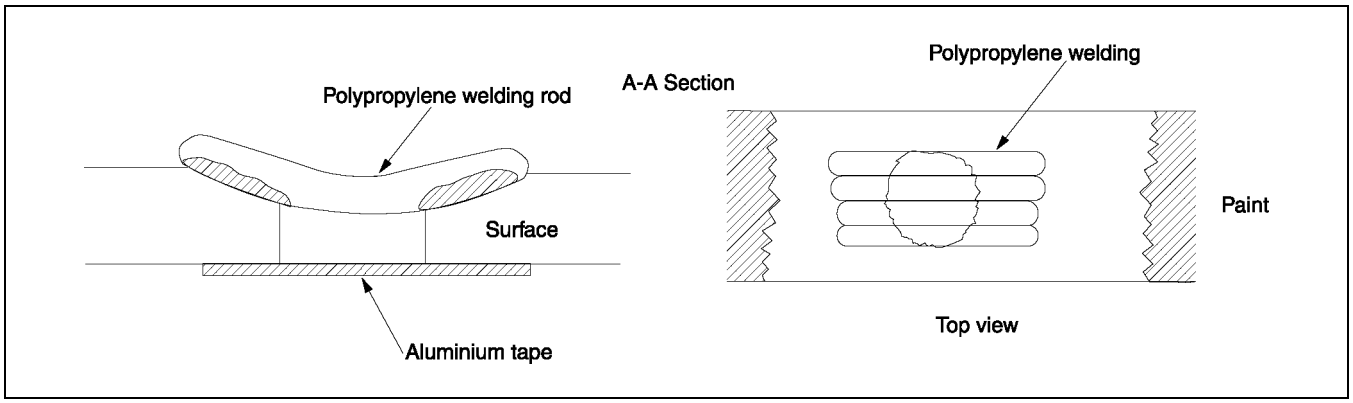

ZUA9818B006

4. Sand the surface of the polypropylene gradually as it is easily melted by the abrasion heat. Sand the area to which repair agent will be applied.

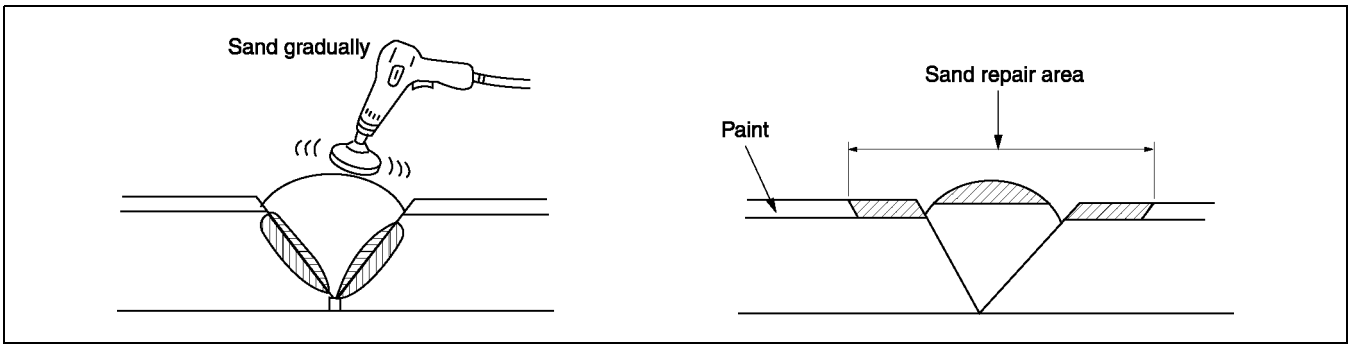

YMU980PCX

5. Uniformly apply polypropylene primer with a brush to an area larger than the repaired area. Allow to dry about 10 minutes at 20 °C {68 °F}.

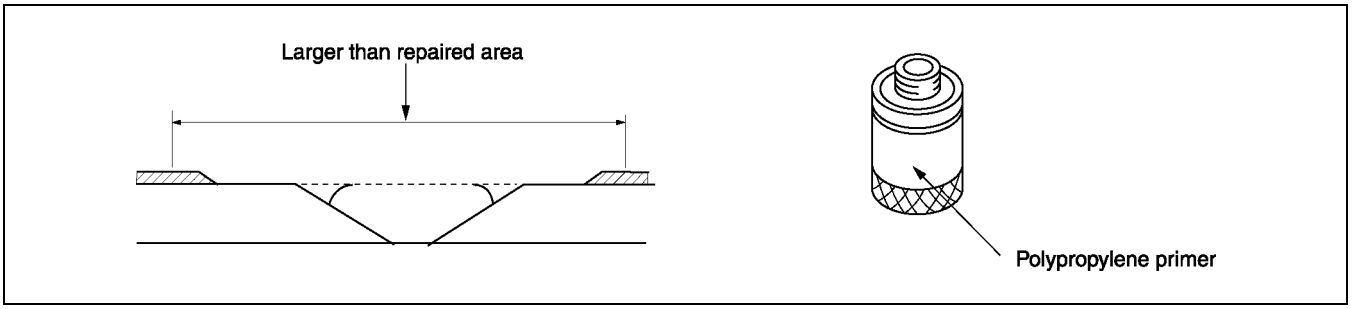

YMU980PCY

6. Mix the main agent and the stiffening agent in a ratio of one to one. Apply the mixed repair agent to the damaged area.

Note
- When mixing the main and stiffening agents, take care not to allow bubbles to form.
- The repair agent hardens quickly (about 5 minutes); proceed with the work immediately after mixing the agents.
- Allow about 30 minutes to dry (20 °C {68 °F}) before sanding.

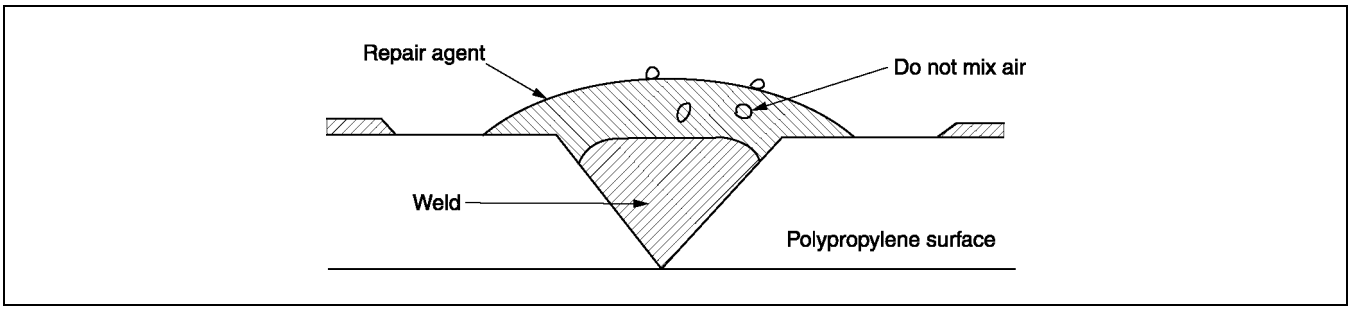

YMU980PCZ

The repair agent is a two part epoxy adhesive.
When the repair agent hardens, it will provide a good finish with the same flexibility as the polypropylens.
The repair agent for a **urethane** bumper is also a two part adhesive compound. However, this is different from that for a polypropylene bumper. If the incorrect repair agent is used, the repair will be faulty.

7. Sand the area with #180—240 sandpaper.

Note
- If excessive force is applied to the area when sanding, the surface will be damaged.
- If fuzz remains around the repaired area, melt it with a heat gun.

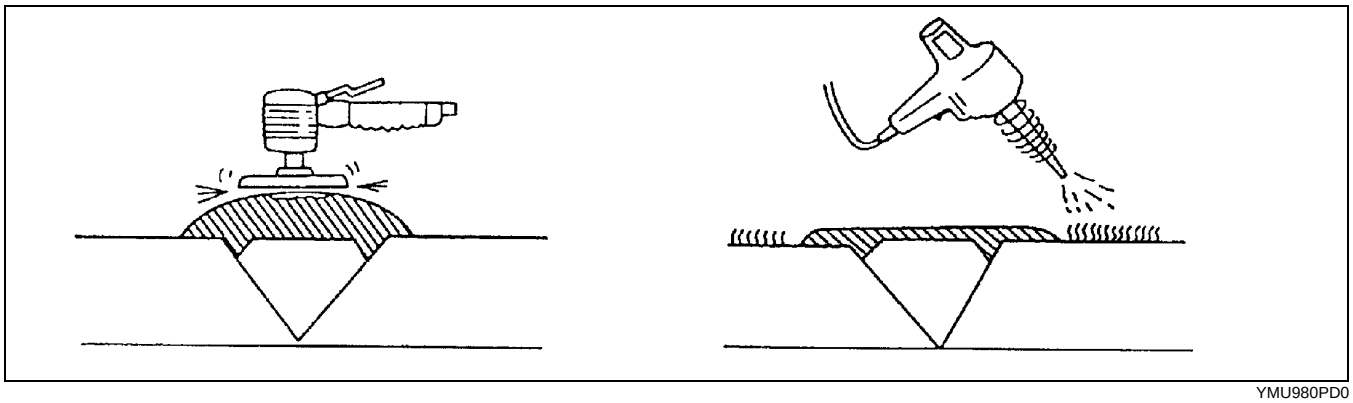

YMU980PD0

8. Degrease the painted surface.
9. Mix the primer and the hardener at a ratio of one to one. Apply the primer to the repaired area and the surface of the bumper with a brush or spray.

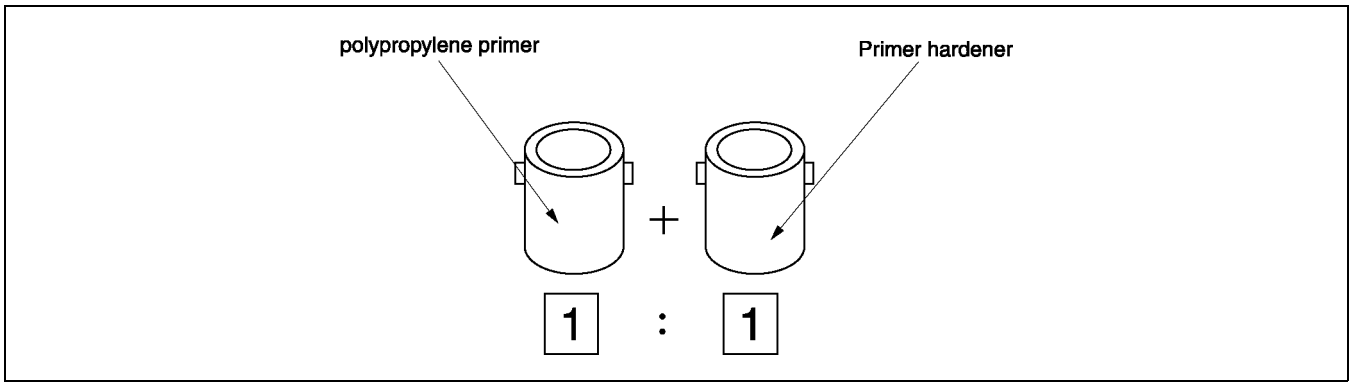

YMU980PD1

Use the primer within 16 hours after it is mixed.

Note
- Polypropylene primer will dissolve even after drying if it is wiped with solvent. Use only water to clean around the primer.

10. Allow the part to dry.

11. Add the softener to the urethane primer surfacer and spray it on the repaired area.
    a. Mixing method
       Urethane primer surfacer + Softener..... Mixture A
       Mixture A + hardener..... Mixture B
       Dilute mixture B with thinner to spray on bumper
    b. Viscosity
       14—16 seconds/viscosimeter 20 °C {68 °F}

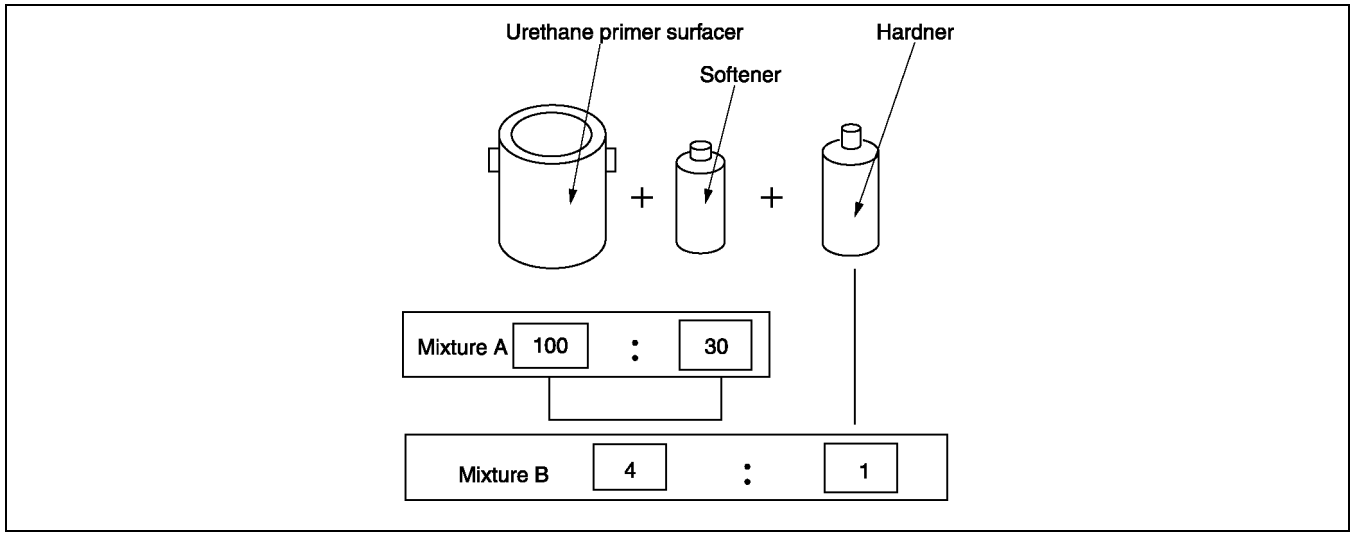

YMU980PD2

Note
- Mix the solutions at the specified ratio.

    c. Spray pressure
       300—400 kPa {3—4 kgf/cm^2, 43—57 psi}
    d. Standard film thickness
       30—40 μ
    e. Spray method
       Spot-spray primer surfacrer on bumper three of four times
12. Air drying 20 °C {68 °F} — 8 hours minimum.
    Forced drying 60 °C {140 °F} — 1 hour
13. Lightly sand the complete surface of the bumper with #400—#600 sandpaper. Do not expose the surface of the polypropylene. (Wet or dry sanding is acceptable.)
14. Wipe the complete surface of the bumper with degreasing agent. Quickly wipe the surface with a clean rag to degrease it.
15. Apply a matching coat of body color to the polypropylene bumper.

Note
- Be sure to use only urethane primer for a urethane bumper and polypropylene primer for a polypropylene bumper. Other paints for repairing a polypropylene bumper are the same as those for the urethane bumper.

16. Air drying 20 °C {68 °F} — 8 hours minimum.
    Forced drying 60 °C {140 °F} — 1 hour

Note
- Let the part air dry when possible as forced drying could cause bubbles in the top coat.

PRIMARY COLOR MIXTURE CHART FOR BODY COLORS

PRIMARY COLOR MIXTURE CHART FOR BODY COLORS VII-2
PRIMARY COLOR MIXTURE CHART FOR BODY COLORS VII-2

PRIMARY COLOR MIXTURE CHART FOR BODY COLORS

PRIMARY COLOR MIXTURE CHART FOR BODY COLORS

A6E982089000B01

- This is the primary color mixture chart for body colors.
- Please use the paint available in your country.
- A blank column indicates that there is no primary color available.

AKZO

COLOR CODE	COLOR NAME		KIND OF PAINT	POLYXITHANE/POLYURETHANE	
			LABEL	AUTOBASE	AUTOCRYL
			INGREDIENTS	CC/CC g{oz}	CC/CC g{oz}
A3E	CLASSIC RED CLE	956	VIOLET-RED TRANSPARENT		537.0 {18.94}
		559	RED OXIDE		544.2 {19.20}
		528	RED MAROON TRANSPARENT		621.4 {21.92}
		359	BRILLIANT RED	777.7 {27.43}	989.8 {34.91}
		00	WHITE	778.2 {27.45}	
		744	MIXING BLACK	781.9 {27.58}	
		538	BRIGHT MAROON TRANSPARENT	989.9 {34.92}	
A4D	ARCTIC WHITE CLE	00	WHITE	1,172.5 {41.36}	1,283.0 {45.26}
		558	LIGHT OXIDE YELLOW	1,173.9 {41.41}	
		744	MIXING BLACK	1,175.5 {41.46}	
		971	VIOLET TRANSPARENT		1,283.6 {45.28}
		904	DARK BLUE		1,284.5 {45.31}
		744	MIXING BLACK		1,286.3 {45.37}
		558	LIGHT OXIDE YELLOW		1,292.5 {45.59}
16W	BLACK MC	400	DEEP BLACK	454.3 {16.02]	
		334YA	YELLOW GOLD PALIOCROM	457.2 {16.13}	
		333DF	SILVER DOLLAR FINE	476.4 {16.80}	
		777	LIGHT GRAY TRANSPARENT	540.6 {19.07}	
		505	RED SEMI-TRANSPARENT	614.4 {21.67}	
		261	BRIGHT BLUE TRANSPARENT	958.5 {33.81}	
18J	GRACE GREEN MC	732	DARK GREEN TRANSPARENT	545.1 {19.23}	
		333M	MIXING METALLIC MEDIUM COARSE	550.9 {19.43}	
		777	LIGHT GRAY TRANSPARENT	565.6 {19.95}	
		575	BLUE TRANSPARENT	603.9 {21.30}	
		333PG	YELLOW(GOLD)PEARL-EFFECT MIXING COLOR	642.2 {22.65}	
		400	DEEP BLACK	755.6 {26.65}	
		333P	WHITE PEARL-EFFECT MIXING COLOR	870.9 {30.72}	
		952	DARK RED OXIDE TRANSPARENT	996.6 {35.15}	

PRIMARY COLOR MIXTURE CHART FOR BODY COLORS

COLOR CODE	COLOR NAME		KIND OF PAINT	POLYXITHANE/POLYURETHANE	
			LABEL	AUTOBASE	AUTOCRYL
		INGREDIENTS		CC/CC g{oz}	CC/CC g{oz}
24E	SPARKLING SILVER M	333DC	SILVER DOLLAR METALLIC COARSE	479.9 {16.93}	
		952	DARK RED OXIDE TRANSPARENT	493.8 {17.42}	
		777	LIGHT GRAY	526.2 {18.56}	
		977	DARK OXIDE YELLOW	560.9 {19.78}	
		666	CORRECTION BINDER	676.8 {23.87}	
		333EC	MIXING METALLIC EXTRA COARSE	978.2 {34.50}	
25B	BLUE PACIFIC MC	261	BRIGHT BLUE TRANSPARENT	496.5 {17.51}	
		777	LIGHT GRAY	506.2 {17.86}	
		400	DEEP BLACK	537.5 {18.96}	
		333CC	MIXING METALLIC VERY COARSE	581.9 {20.53}	
		341	BLUE GREEN	630.2 {22.23}	
		971	VIOLET TRANSPARENT	724.6 {25.56}	
		333PB	BLUE PEARL-EFFECT MIXING COLOR	966.1 {34.08}	
25C	CANARY YELLOW MC		FIRST COAT		
		297	LIGHT YELLOW	521.4 {18.39}	
		744	MIXING BLACK	525.2 {18.53}	
		360	RED OXIDE	542.4 {19.13}	
		361	RED YELLOW	607.0 {21.41}	
		00	WHITE	1,077.2 {38.00}	
			SECOND COAT		
		666	CORRECTION BINDER	746.4 {26.33}	
		332XS	XIRALLIC CRYSTAL SILVER	794.2 {28.01}	
		332XG	XIRALLIC SUNBEARN GOLD	861.2 {30.38}	
		777	LIGHT GRAY	956.9 {33.75}	
25D	SNOWFLAKE WHITE PEARL MC		FIRST COAT		
		00	WHITE	1,172.7 {41.37}	
		744	MIXING BLACK	1,174.2 {41.42}	
		558	LIGHT OXIDE YELLOW	1,175.6 {41.47}	
			SECOND COAT		
		332XS	XIRALLIC CRYSTAL SILVER	481.3 {16.98}	
		332XG	XIRALLIC SUNBEARN GOLD	529.4 {18.67}	
		777	LIGHT GRAY	649.7 {22.92}	
		666	CORRECTION BINDER	962.5 {33.95}	
25E	STRATO BLUE MC	332VA	VIOLET PEARL	390.6 {13.78}	
		777	LIGHT GRAY	401.1 {14.15}	
		956	VIOLET-RED TRANSPARENT	425.1 {14.99}	
		261	BRIGHT BLUE TRANSPARENT	507.7 {17.91}	
		333PB	BLUE PEARL-EFFECT MIXING COLOR	612.9 {21.62}	
		400	DEEP BLACK	736.1 {25.96}	
		341	BLUE GREEN	973.5 {34.34}	

PRIMARY COLOR MIXTURE CHART FOR BODY COLORS

COLOR CODE	COLOR NAME		KIND OF PAINT	POLYXITHANE/POLYURETHANE	
			LABEL	AUTOBASE	AUTOCRYL
			INGREDIENTS	CC/CC g{oz}	CC/CC g{oz}
25F	GARNET RED MC	334XR	XIRALLIC RADIANT RED	352.2 {12.42}	
		400	DEEP BLACK	378.8 {13.36}	
		538	BRIGHT MAROON TRANSPARENT	449.2 {15.84}	
		777	LIGHT GRAY	543.1 {19.16}	
		956	VIOLET-RED TRANSPARENT	746.6 {26.34}	
		262	RED TRANSPARENT	973.5 {34.34}	
25G	TITANIUM GRAY M	333DC	SILVER DOLLAR METALLIC COARSE	409.9 {14.46}	
		777	LIGHT GRAY	429.5 {15.15}	
		261	BRIGHT BLUE TRANSPARENT	472.3 {16.66}	
		744	MIXING BLACK	639.3 {22.55}	
		333PR	RED PEARL-EFFECT MIXING COLOR	982.3 {34.65}	
25H	SILVER CONTRAIL M	333DC	SILVER DOLLAR METALLIC COARSE	965.4 {34.05}	
		777	LIGHT GRAY	967.1 {34.11}	
		101	OPAL	971.4 {34.26}	
		400	DEEP BLACK	977.8 {34.49}	
		732	DARK GREEN TRANSPARENT	986.1 {34.78}	

PRIMARY COLOR MIXTURE CHART FOR BODY COLORS

E.I.du pont de nemours &Co.(Inc.)

COLOR CODE	COLOR NAME		KIND OF PAINT	POLYXITHANE/POLYURETHANE		
			LABEL	CRONAR	CRONAR	-
			INGREDIENTS	CENTARI 6000 g{oz}	CENTARI 600 g{oz}	CENTARI 500 g{oz}
A3E	CLASSIC RED CLE	AM 64	MAGENTA	240.4 {8.48}	184.1 {6.49}	
		AM 50	BRILLIANT RED	440.7 {15.54}	337.4 {11.90}	
		AM 66	RED VIOLET	460.7 {16.25}	352.8 {12.44}	
		AM 150	BINDER		935.6 {33.00}	
		XB 155	M.S. BINDER	950.4 {33.52}		
A4D	ARCTIC WHITE CLE	AM1	WHITE H.S.	663.9 {23.42}	622.3 {21.95}	
		AM7	BLACK L.S.	677.4 {23.89}	635.0 {22.40}	
		AM82	YELLOW OXIDE L.S.	679.3 {23.96}	636.8 {22.46}	
		AB 150	B/C BALANCER		1,167.0 {41.16}	
		XB 155	M.S. BINDER	1,187.8 {41.90}		
16W	BLACK MC	AM6	BLACK H.S.		174.4 {6.15}	
		4530S	FLOP CONTROL AGENT		252.9 {8.92}	
		AM14	COARSE ALUMINIUM		255.1 {9.00}	
		AM74	BLUE PEARL		263.6 {9.30}	
		AB150	B/C BALANCER		772.8 {27.26}	
		1B160	BINDER		925.6 {32.65}	
18J	GRACE GREEN MC	AM27	TRANSPARENT BLUE	94.9 {3.35}		
		AM32	GREEN	170.5 {6.01}		
		AM5	JET BLACK	235.6 {8.31}		
		4530S	FLOP CONTROL AGENT	287.4 {10.14}		
		AM75	SUPER GREEN PEARL	326.2 {11.51}		
		AM76	GOLD PEARL	341.8 {12.06}		
		XB155	M.S. BINDER	715.5 {25.24}		
		XB165	M.S. BINDER	950.2 {33.52}		
24E	SPARKLING SILVER M	AM95	BR COARSE ALUMINIUM	127.6 {4.50}	110.2 {3.89}	
		AM11	MEDIUM ALUMINIUM	185.8 {6.55}	160.4 {5.66}	
		AM90	TRANSOXIDE YELLOW	206.9 {7.30}	178.7 {6.30}	
		AM91	TRANSOXIDE RED	214.4 {7.56}	185.2 {6.53}	
		AM2	WHITE L.S.	219.3 {7.74}	189.4 {6.68}	
		AM5	JET BLACK	221.8 {7.82}	191.5 {6.75}	
		AB150	B/C BALANCER		546.6 {19.28}	
		AB160	BINDER		945.5 {33.35}	
		XB155	M.S. BINDER	436.5 {15.40}		
		XB165	M.S. BINDER	958.0 {33.79}		
25B	BLUE PACIFIC MC	AM27	TRANSPARENT BLUE	239.0 {8.43}	194.6 {6.86}	
		AM74	BLUE PEARL	347.8 {12.27}	283.2 {9.99}	
		AM62	TRANSPARENT RED	422.6 {14.91}	344.1 {12.14}	
		4530S	FLOP CONTROL AGENT	466.0 {16.44}	379.4 {13.38}	
		AM29	LIGHT BLUE	484.7 {17.10}	394.6 {13.92}	
		AM5	JET BLACK	500.6 {17.66}	407.6 {14.38}	
		AM17	BRIGHT-FINE ALUMINIUM	503.1 {17.75}	409.5 {14.44}	
		AB 150	B/C BALANCER		941.3 {33.20}	
		XB 155	M.S. BINDER	952.3 {33.59}		
25C	CANARY YELLOW MC	Please contact with your distributor or Du Pont office for the formula. Du pont is ready to provide the specialized color of CANARY YELLOW MC as a ready-to-use product.				

PRIMARY COLOR MIXTURE CHART FOR BODY COLORS

COLOR CODE	COLOR NAME		KIND OF PAINT	POLYXITHANE/POLYURETHANE		
			LABEL	CRONAR	CRONAR	-
		INGREDIENTS		CENTARI 6000 g{oz}	CENTARI 600 g{oz}	CENTARI 500 g{oz}
25D	SNOWFLAKE@ WHITE PEARL MC COLOR BASE	AM1	WHITE H.S.		655.7 {23.13}	
		AB150	B/C BALANCER		1,186.9 {41.87}	
	SNOWFLAKE WHITE PEARL MC PEARL BASE	M8819	SILVER CRYSTAL(FAC PAC)		844.7 {29.80}	
		4530S	FLOP CONTROL AGENT		930.9 {32.84}	
		AM2	WHITE L.S.		936.9 {33.05}	
		AM7	BLACK L.S.		937.9 {33.08}	
		AM70	FAST BLUE L.S.		938.3 {33.10}	
25E	STRATO BLUE MC	AM27	TRANSPARENT BLUE	144.2 {5.09}	116.5 {4.11}	
		AM79	VIOLET PEARL	243.1 {8.57}	196.5 {6.93}	
		AM74	BLUE PEARL	314.2 {11.08}	253.9 {8.96}	
		AM5	JET BLACK	376.3 {13.27}	304.1 {10.73}	
		AM20	VIOLET	432.9 {15.27}	349.8 {12.34}	
		AM66	RED VIOLET	485.1 {17.11}	392.0 {13.83}	
		AB 150	B/C BALANCER		948.9 {33.47}	
		XB 155	M.S. BINDER	962.3 {33.94}		
25F	GARNET RED MC	AM64	MAGENTA	228.7 {8.07}	186.5 {6.58}	
		AM85	TRANS MAROON	331.6 {11.70}	270.4 {9.54}	
		4530S	FLOP CONTROL AGENT	397.2 {14.01}	323.9 {11.43}	
		AM76	GOLD PEARL	422.4 {14.90}	344.4 {12.15}	
		AM94	EXTRA COARSE ALUMINUM	434.7 {15.33}	354.5 {12.50}	
		AM5	JET BLACK	443.9 {15.66}	362.0 {12.77}	
		AM2	WHITE L.S.	452.2 {15.95}	368.7 {13.01}	
		AB 150	B/C BALANCER		939.1 {33.13}	
		XB 155	M.S. BINDER	949.9 {33.51}		
25G	TITANIUM GRAY M	AM95	BR COARSE ALUMINIUM	89.6 {3.16}	83.6 {2.95}	
		AM5	JET BLACK	140.6 {4.96}	131.1 {4.62}	
		AM28	FAST BLUE H.S.	157.4 {5.55}	146.8 {5.18}	
		AM20	VIOLET	171.5 {6.05}	159.9 {5.64}	
		AM84	RED OXIDE L.S.	184.9 {6.52}	172.5 {6.08}	
		AM2	WHITE L.S.	197.2 {6.96}	183.9 {6.49}	
		AB 150	B/C BALANCER		597.3 {21.07}	
		AB 160	BINDER		933.8 {32.94}	
		XB 155	M.S. BINDER	424.6 {14.98}		
		XB 165	M.S. BINDER	943.5 {33.28}		
25H	SILVER CONTRAIL M	AM95	BR COARSE ALUMINIUM	155.2 {5.47}	131.8 {4.65}	
		4530S	FLOP CONTROL AGENT	172.4 {6.08}	146.5 {5.17}	
		AM31	FIRST GREEN L.S.	189.0 {6.67}	160.6 {5.66}	
		AM70	FAST BLUE L.S.	203.3 {7.17}	172.7 {6.09}	
		AM2	WHITE L.S.	211.7 {7.47}	179.8 {6.34}	
		AM5	JET BLACK	215.3 {7.59}	182.9 {6.45}	
		AB 150	B/C BALANCER		571.2 {20.15}	
		AB 160	BINDER		938.1 {33.09}	
		XB 155	M.S. BINDER	449.8 {15.87}		
		XB 165	M.S. BINDER	950.1 {33.51}		

PRIMARY COLOR MIXTURE CHART FOR BODY COLORS

STANDOX

COLOR CODE	COLOR NAME	KIND OF PAINT / LABEL / MIXING No.	POLYURETHANE STANDOX CC/CC g{oz}
A3E	CLASSIC RED CLE	861	526.0 {18.55}
		566	714.9 {25.22}
		576	899.9 {31.74}
		564	939.4 {33.14}
A4D	ARCTIC WHITE CLE	870	1,120.9 {39.54}
		564	1,140.3 {40.22}
		574	1,141.9 {40.28}
16W	BLACK MC	571	716.5 {25.27}
		803	789.6 {27.85}
		008	856.2 {30.20}
		811	897.0 {31.64}
		859	918.2 {32.39}
		823	921.9 {32.52}
		570	925.6 {32.65}
18J	GRACE GREEN MC	571	262.6 {9.26}
		573	690.2 {24.35}
		823	764.3 {26.96}
		824	844.9 {29.80}
		008	868.4 {30.63}
		588	924.7 {32.62}
		802	937.9 {33.08}
24E	SPARKLING SILVER M	590	302.2 {10.66}
		811	836.2 {29.50}
		008	870.9 {30.72}
		581	924.6 {32.61}
		582	937.9 {33.08}
		571	941.7 {33.22}
25B	BLUE PACIFIC MC	859	673.3 {23.75}
		853	808.0 {28.50}
		825	905.7 {31.95}
		812	922.5 {32.54}
		563	936.0 {33.02}
25C	CANARY YELLOW MC	801	563.2 {19.87}
		008	695.7 {24.54}
		574	795.1 {28.05}
		570	894.4 {31.55}
		580	983.9 {34.71}
		575	990.5 {34.94}
	GROUND	870	1,131.2 {39.90}
		571	1,140.6 {40.23}
		563	1,143.8 {40.35}
25D	SNOWFLAKE WHITE PEARL MC	599	748.5 {26.40}
		801	873.2 {30.80}
		802	898.2 {31.68}
		008	939.8 {33.15}
		570	943.9 {33.29}
	GROUND	570	1,032.5 {36.42}
		564	1,053.6 {37.16}
		581	1,054.7 {37.20}

PRIMARY COLOR MIXTURE CHART FOR BODY COLORS

COLOR CODE	COLOR NAME	KIND OF PAINT / LABEL / MIXING No.	POLYURETHANE / STANDOX / CC/CC g{oz}
25E	STRATO BLUE MC	853	271.8 {9.59}
		825	482.7 {17.03}
		571	685.3 {24.17}
		821	795.0 {28.04}
		859	872.6 {30.78}
		569	945.2 {33.34}
25F	GARNET RED MC	833	332.3 {11.72}
		566	664.6 {23.44}
		805	767.6 {27.08}
		828	847.4 {29.89}
		576	913.8 {32.23}
		571	950.4 {33.52}
25G	TITANIUM GRAY M	811	477.5 {16.84}
		593	716.3 {25.27}
		571	823.7 {29.05}
		585	888.2 {31.33}
		569	912.1 {32.17}
		008	924.0 {32.59}
		567	933.6 {32.93}
25H	SILVER CONTRAIL M	593	505.1 {17.82}
		811	926.0 {32.66}
		589	932.3 {32.89}
		571	934.4 {32.96}

SPIES HACKER

COLOR CODE	COLOR NAME	KIND OF PAINT	POLYURETHANE
		LABEL	PERMACRON
		INGREDIENTS	g{oz}
A3E	CLASSIC RED CLE	MB 544	528.2 {18.63}
		MB 536	717.7 {25.32}
		MB 529	903.5 {31.87}
		MB 525	943.2 {33.27}
A4D	ARCTIC WHITE	MB 511	1,123.1 {39.62}
		MB 525	1,142.6 {40.30}
		MB 505	1,144.2 {40.36}
16W	BLACK MC	MB 502	713.7 {25.17}
		MB 799	780.1 {27.52}
		MB 558	814.8 {28.74}
		MB 593	853.0 {30.09}
		MB 554	874.2 {30.84}
		MB 501	918.5 {32.40}
		MB 561	922.2 {32.53}
18J	GRACE GREEN MC	MB 522	429.4 {15.15}
		MB 502	693.0 {24.44}
		MB 572	774.0 {27.30}
		MB 561	848.3 {29.92}
		MB 553	904.8 {31.92}
		MB 799	928.3 {32.74}
		MB 592	941.5 {33.21}
24E	SPARKLING SILVER M	MB 558	532.9 {18.80}
		MB 514	834.5 {29.44}
		MB 532	888.1 {31.33}
		MB 799	922.8 {32.55}
		MB 531	936.0 {33.02}
		MB 502	939.8 {33.15}
25B	BLUE PACIFIC MC	MB 554	672.0 {23.70}
		MB 546	806.4 {28.44}
		MB 563	903.9 {31.88}
		MB 557	920.7 {32.48}
		MB 527	934.1 {32.95}
25C	CANARY YELLOW MC	MB 591	562.1 {19.83}
		MB 799	694.3 {24.49}
		MB 505	793.5 {27.99}
		MB 501	892.6 {31.49}
		MB 523	981.9 {34.63}
		MB 528	988.5 {34.87}
	GROUND	MB 511	1,133.5 {39.98}
		MB 502	1,142.9 {40.31}
		MB 527	1,146.1 {40.43}
25D	SNOWFLAKE WHITE PEARL MC	MB 299	747.0 {26.35}
		MB 591	871.5 {30.74}
		MB 799	913.0 {32.20}
		MB 592	937.9 {33.08}
		MB 501	942.0 {33.23}
	GROUND	MB 501	1,036.7 {36.57}
		MB 525	1,057.8 {37.31}
		MB 532	1,058.9 {37.35}

PRIMARY COLOR MIXTURE CHART FOR BODY COLORS

COLOR CODE	COLOR NAME	KIND OF PAINT	POLYURETHANE
		LABEL	PERMACRON
		INGREDIENTS	g{oz}
25E	STRATO BLUE MC	MB 546	272.3 {9.60}
		MB 563	483.7 {17.06}
		MB 502	686.7 {24.22}
		MB 568	796.6 {28.10}
		MB 554	874.3 {30.84}
		MB 520	947.1 {33.41}
25F	GARNET RED MC	MB 582	331.6 {11.70}
		MB 536	663.3 {23.40}
		MB 595	766.1 {27.02}
		MB 564	845.7 {29.83}
		MB 529	912.0 {32.17}
		MB 502	948.5 {33.46}
25G	TITANIUM GRAY M	MB 558	487.5 {17.20}
		MB 513	717.7 {25.32}
		MB 502	825.3 {29.11}
		MB 552	890.0 {31.39}
		MB 520	913.9 {32.24}
		MB 799	925.8 {32.66}
		MB 506	935.5 {33.00}
25H	SILVER CONTRAIL M	MB 513	504.1 {17.78}
		MB 558	924.1 {32.60}
		MB 538	930.4 {32.82}
		MB 502	932.5 {32.89}

PRIMARY COLOR MIXTURE CHART FOR BODY COLORS

Nexa Autocolor

COLOR CODE	COLOR NAME		KIND OF PAINT	POLYURETHANE	
			LABEL	AUTOCOLOR	
			INGREDIENTS	1L g{oz}	5L g{oz}
A3E	CLASSIC RED CLE		P425-941	461.9 {16.29}	2,309.5 {81.46}
			P429-976	558.5 {19.70}	2,792.5 {98.50}
			P425-900	562.6 {19.84}	2,813.0 {99.22}
			P425-921	678.6 {23.94}	3,393.0 {119.68}
			P192-474	1,017.4 {35.89}	5,087.0 {179.44}
A4D	ARCTIC WHITE CLE		P425-900	772.0 {27.23}	3,860.0 {136.16}
			P420-918RT	776.8 {27.40}	3,884.0 {137.00}
			P420-960RT	778.0 {27.44}	3,890.0 {137.21}
			P420-904RT	795.9 {28.07}	3,979.5 {140.37}
			P192-475	1,193.3 {42.09}	5,966.5 {210.46}
16W	BLACK MC		P425-0948	356.1 {12.56}	1,780.5 {62.80}
			P420-0902RT	388.6 {13.71}	1,943.0 {68.54}
			P425-0988	410.6 {14.48}	2,053.0 {72.42}
			P420-0920	424.0 {14.96}	2,120.0 {74.78}
			P425-0922	456.5 {16.10}	2,282.5 {80.51}
			P426-PP07	524.5 {18.50}	2,622.5 {92.50}
			P192-0500	957.2 {33.76}	4,786.0 {168.82}
18J	GRACE GREEN MC		P426-PP65	138.7 {4.89}	693.5 {24.46}
			P425-0948	263.7 {9.30}	1,318.5 {46.51}
			P420-0938	314.5 {11.09}	1,572.5 {55.47}
			P426-PP60	338.9 {11.95}	1,694.5 {59.77}
			P420-902RT	356.5 {12.57}	1,782.5 {62.87}
			P420-0982	398.5 {14.06}	1,992.5 {70.28}
			P425-0922	464.9 {16.40}	2,324.5 {81.99}
			P425-0954	594.8 {20.98}	2,974.0 {104.90}
			P192-0500	976.7 {34.45}	4,883.5 {172.26}
24E	SPAKING SILVER M		P425-984	396.5 {13.99}	1,982.5 {69.93}
			P420-938	419.0 {14.78}	2,095.0 {73.90}
			P420-942	429.7 {15.16}	2,148.5 {75.78}
			P420-982	451.2 {15.92}	2,256.0 {79.58}
			P425-989	634.8 {22.39}	3,174.0 {111.96}
			P192-528	976.7 {34.45}	4,883.5 {172.26}
25B	BLUE PACIFIC MC		P426-PP07	258.2 {9.11}	1,291.0 {45.54}
			P425-922	345.3 {12.18}	1,726.5 {60.90}
			P420-920	423.6 {14.94}	2,118.0 {74.71}
			P420-938	448.1 {15.81}	2,240.5 {79.03}
			P425-948	487.2 {17.19}	2,436.0 {85.93}
			P425-957	572.3 {20.19}	2,861.5 {100.93}
			P426-PP63	729.8 {25.74}	3,649.0 {128.71}
			P192-500	978.2 {34.50}	4,891.0 {172.52}
25C	CANARY YELLOW MC	GROUND COAT	P420-905	299.1 {10.55}	1,495.5 {52.75}
			P425-900	419.2 {14.79}	2,096.0 {73.93}
			P420-926	430.1 {15.17}	2,150.5 {75.86}
			P429-937	728.1 {25.68}	3,640.5 {128.41}
			P192-475	1,091.6 {38.50}	5,458.0 {192.52}
		BASE COAT	P426-PP05	14.2 {0.50}	71.0 {2.50}
			P426-PP09	18.9 {0.67}	94.5 {3.33}
			P192-500	530.0 {18.69}	2,650.0 {93.47}
			P190-376	948.1 {33.44}	4,740.5 {167.21}

PRIMARY COLOR MIXTURE CHART FOR BODY COLORS

COLOR CODE	COLOR NAME		KIND OF PAINT	POLYURETHANE	
			LABEL	AUTOCOLOR	
			INGREDIENTS	1L g{oz}	5L g{oz}
25D	SNOW-FLAKE WHITE PEARL MC	GROUND COAT	P425-900	786.5 {27.74}	3,932.5 {138.71}
			P420-910RT	787.7 {27.78}	3,938.5 {138.92}
			P420-904RT	798.5 {28.17}	3,992.5 {140.83}
			P192-475	1,197.1 {42.23}	5,985.5 {211.13}
		TOP COAT	P426-PP05	62.8 {2.22}	314.0 {11.08}
			P426-PP09	74.2 {2.62}	371.0 {13.09}
			P192-500	556.3 {19.62}	2,781.5 {98.11}
			P190-376	950.9 {33.54}	4,754.5 {167.71}
25E	STRATO BLUE MC		P420-930	202.4 {7.14}	1,012.0 {35.70}
			P420-920	271.8 {9.59}	1,359.0 {47.94}
			P425-922	333.5 {11.76}	1,667.5 {58.82}
			P425-948	383.6 {13.53}	1,918.0 {67.65}
			P426-PP64	453.0 {15.98}	2,265.0 {79.89}
			P426-PP07	582.1 {20.53}	2,910.5 {102.66}
			P192-500	963.7 {33.99}	4,818.5 {169.96}
25F	GARNET RED MC		P429-923	360.2 {12.71}	1,801.0 {63.53}
			P426-HE01	453.2 {15.99}	2,266.0 {79.93}
			P420-938	534.3 {18.85}	2,671.5 {94.23}
			P426-PP09	553.1 {19.51}	2,765.5 {97.55}
			P425-984	562.0 {19.82}	2,810.0 {99.12}
			P429-976	608.5 {21.46}	3,042.5 {107.32}
			P420-933	700.5 {24.71}	3,502.5 {123.54}
			P426-PP08	920.2 {32.46}	4,601.0 {162.29}
			P192-500	989.5 {34.90}	4,947.5 {174.51}
25G	TITANIUM GRAY M		P425-989	323.3 {11.40}	1,616.5 {57.02}
			P425-950	381.9 {13.47}	1,909.5 {67.35}
			P420-938	402.4 {14.19}	2,012.0 {70.97}
			P429-976	413.1 {14.57}	2,065.5 {72.86}
			P420-907	419.9 {14.81}	2,099.5 {74.06}
			P425-922	434.6 {15.33}	2,173.0 {76.65}
			P420-930	457.1 {16.12}	2,285.5 {80.62}
			P425-992	634.9 {22.40}	3,174.5 {111.98}
			P192-528	976.8 {34.46}	4,884.0 {172.28}
25H	SILVER CONTRAIL M		P425-992	477.0 {16.83}	2,385.0 {84.13}
			P425-989	526.8 {18.58}	2,634.0 {92.91}
			P420-960RT	535.6 {18.89}	2,678.0 {94.46}
			P425-957	539.5 {19.03}	2,697.5 {95.15}
			P425-948	545.4 {19.24}	2,727.0 {96.19}
			P420-938	565.9 {19.96}	2,829.5 {99.81}
			P420-918RT	634.2 {22.37}	3,171.0 {111.85}
			P192-528	975.6 {34.41}	4,878.0 {172.06}

PRIMARY COLOR MIXTURE CHART FOR BODY COLORS

PPG INDUSTRIES

COLOR CODE	COLOR NAME	KIND OF PAINT	POLYURETHANE	
		LABEL	DELTRON	
		INGREDIENTS	1L g{oz}	NOTE
A3E	CLASSIC RED CLE	752	670.0 {23.63}	
		746	875.0 {30.86}	
		791	953.0 {33.62}	
		756	957.9 {33.79}	
A4D	ARCTIC WHITE CLE	753	1,237.9 {43.66}	
		745	1,239.0 {43.70}	
		742	1,239.4 {43.71}	
		740	1,239.6 {43.72}	
16W	BLACK MC	740	672.0 {23.70}	
		763	864.0 {30.48}	
		952	901.1 {31.78}	
		953	936.1 {33.02}	
		752	950.1 {33.51}	
		753	952.9 {33.61}	
18J	GRACE GREEM MC	957	336.0 {11.85}	
		797	599.0 {21.13}	
		740	799.0 {28.18}	
		754	948.0 {33.44}	
		759	959.2 {33.83}	
		753	962.0 {33.93}	
24E	SPARKLING SILVER M	952	917.0 {32.35}	
		743	947.6 {33.43}	
		745	958.3 {33.80}	
		779	960.9 {33.89}	
		740	961.9 {33.93}	
25B	BLUE PACIFIC MC	776	534.0 {18.84}	
		763	813.0 {28.68}	
		755	890.0 {31.39}	
		958	919.6 {32.44}	
		770	943.3 {33.27}	
		740	964.1 {34.01}	
25C	CANARY YELLOW MC COLOR BASE	744	524.0 {18.48}	
		753	870.0 {30.69}	
		794	1,080.0 {38.10}	
		756	1,084.2 {38.24}	
		792	1,087.3 {38.35}	
	CANARY YELLOW MC PEARL BASE	941	781.0 {27.55}	
		956	876.0 {30.90}	
		960	932.0 {32.87}	
25D	SNOWFLAKE WHITE PEARL MC COLOR BASE	753	1,240.0 {43.74}	
	SNOWFLAKE WHITE PEARL MC PEARL BASE	751	602.0 {21.23}	
		941	919.0 {32.42}	
		753	960.2 {33.87}	
		759	976.0 {34.43}	
		755	976.4 {34.44}	
		756	976.7 {34.45}	
		741	976.8 {34.46}	

PRIMARY COLOR MIXTURE CHART FOR BODY COLORS

COLOR CODE	COLOR NAME	KIND OF PAINT	POLYURETHANE	
		LABEL	DELTRON	
		INGREDIENTS	1L g{oz}	NOTE
25E	STRATO BLUE MC	958	336.0 {11.85}	
		776	653.0 {23.03}	
		763	768.0 {27.09}	
		740	869.0 {30.65}	
		755	965.0 {34.04}	
25F	GARNET RED MC	775	343.0 {12.10}	
		774	511.0 {18.02}	
		793	679.0 {23.95}	
		955	818.0 {28.85}	
		759	891.0 {31.43}	
		756	955.0 {33.69}	
		753	957.2 {33.76}	
25G	TITANIUM GRAY M	952	682.0 {24.06}	
		756	911.0 {32.13}	
		741	928.6 {32.75}	
		755	939.3 {33.13}	
		955	950.0 {33.51}	
		799	958.0 {33.79}	
25H	SILVER CONTRAIL M	952	936.0 {33.02}	
		759	943.5 {33.28}	
		740	949.5 {33.49}	
		797	953.5 {33.63}	
		963	956.7 {33.75}	
		743	959.2 {33.83}	
		753	960.2 {33.87}	

PRIMARY COLOR MIXTURE CHART FOR BODY COLORS

DIAMONT

COLOR CODE	COLOR NAME	KIND OF PAINT LABEL INGREDIENTS		POLYURETHANE DIAMONT BASE g{oz}	POLYURETHANE SOLO DE DIAMONT BASE g{oz}
A3E	CLASSIC RED CLE	BC 020	REDUCER(THINNER)	88.0 {3.10}	
		BC 832	RED 2	618.7 {21.82}	
		BC 816	ORGANIC BRIGHT RED	915.4 {32.29}	
		BC 250	CARBON BLACK 2	923.8 {32.59}	
A4D	ARCTIC WHITE CLE	BC 020	REDUCER(THINNER)	88.0 {3.10}	
		BC 190	WHITE	962.4 {33.95}	
		BC 209	BLACK TINT	1,030.3 {36.34}	
		BC 609	YELLOW TINT	1,078.9 {38.06}	
		BC 809	RED TINT	1,093.6 {38.57}	
16W	BLACK MC	BC 020	REDUCER(THINNER)	88.0 {3.10}	
		BC 200	CARBON BLACK	667.8 {23.56}	
		BC 406	PHTALO BLUE 3	742.7 {26.20}	
		BC 470	INDO BLUE	809.1 {28.54}	
		BC 118	BLUE PEARL	842.1 {29.70}	
		BC 171	MEDIUM ROUND ALUMINUM	867.4 {30.60}	
		BC 805	IRON RED	876.9 {30.93}	
		BC 101	FLOP CONTROL	916.8 {32.34}	
18J	GRACE GREEN MC	BC 020	REDUCER(THINNER)	88.0 {3.10}	
		BC 500	PHTALO GREEN 1	393.4 {13.88}	
		BC 200	CARBON BLACK 1	653.5 {23.05}	
		BC 1255	GREEN PEARL	781.8 {27.58}	
		BC 406	PHTALO PEARL 3	882.3 {31.12}	
		BC 105	WHITE TINT	895.3 {31.58}	
		BC 101	FLOP CONTROL	926.7 {32.69}	
24E	SPARKLING SILVER M	BC 020	REDUCER(THINNER)	88.0 {3.10}	
		BC 171	MEDIUM ROUND ALUMINUM	735.1 {25.93}	
		BC 600	INORGANIC YELLOW 1	839.5 {29.61}	
		BC 180	COARSE ALUMINUM	882.9 {31.14}	
		BC 200	CARBON BLACK 1	918.5 {32.40}	
		BC 805	IRON RED 2	929.9 {32.80}	
25B	BLUE PACIFIC MC	BC 020	REDUCER(THINNER)	88.0 {3.10}	
		BC 406	PHTALO PEARL 3	382.5 {13.49}	
		BC 118	BLUE PEARL	587.2 {20.71}	
		BC 400	PHTALO BLUE 1	789.5 {27.85}	
		BC 300	VIOLET	869.4 {30.67}	
		BC 200	CARBON BLACK 1	894.9 {31.57}	
		BC 140	MEDIUM FINE ALUMINUM	916.1 {32.31}	
		BC 171	MEDIUM ROUND ALUMINUM	926.4 {32.68}	

PRIMARY COLOR MIXTURE CHART FOR BODY COLORS

COLOR CODE	COLOR NAME	KIND OF PAINT / LABEL / INGREDIENTS		POLYURETHANE	
				DIAMONT BASE g{oz}	SOLO DE DIAMONT BASE g{oz}
25C	CANARY YELLOW MC	GROUND COAT			
		BC 020	REDUCER(THINNER)	88.0 {3.10}	
		BC 621	ORGANIC YELLOW 2	500.1 {17.64}	
		BC 190	WHITE	857.0 {30.23}	
		BC 615	ORGANIC YELLOW 3	983.4 {34.69}	
		BC 805	IRON RED 2	1,016.7 {35.86}	
		BC 250	LAMP BLACK	1,026.0 {36.19}	
		COLOR BASE			
		BC 020	REDUCER(THINNER)	88.0 {3.10}	
		BC 111	WHITE PEARL	339.8 {11.99}	
		BC 100	MIXING CLEAR	551.1 {19.44}	
		BC 605	INORGANIC YELLOW 2	709.4 {25.02}	
		CB 63L	CRYSTAL BRASS	780.0 {27.51}	
		BC 621	ORGANIC YELLOW 2	824.2 {29.07}	
		BC 615	ORGANIC YELLOW 3	837.1 {29.53}	
		BC 101	FLOP CONTROL	969.3 {34.19}	
25D	SNOWFLAKE WHITE PEARL MC	GROUND COAT			
		BC 020	REDUCER(THINNER)	88.0 {3.10}	
		BC 190	WHITE	1,010.9 {35.66}	
		BC 209	BLACK TINT	1,058.6 {37.34}	
		BC 809	RED TINT	1,080.7 {38.12}	
		BC 609	YELLOW TINT	1,097.2 {38.70}	
		BC 409	BLUE TINT	1,103.6 {38.93}	
		PEARL BASE			
		BC 020	REDUCER(THINNER)	88.0 {3.10}	
		BC 100	MIXING CLEAR	721.9 {25.46}	
		BC 111	WHITE PEARL	779.3 {27.49}	
		BC 1265	GOLD PEARL 2	804.4 {28.37}	
		BC 101	FLOP CONTROL	910.9 {32.13}	
25E	STRATO BLUE MC	BC 020	REDUCER(THINNER)	88.0 {3.10}	
		BC 200	CARBON BLACK 1	290.4 {10.24}	
		BC 100	MIXING CLEAR	479.2 {16.90}	
		BC 400	PHTALO BLUE 1	646.4 {22.80}	
		BC 406	PHTALO PEARL 3	725.3 {25.58}	
		BC 118	BLUE PEARL	794.2 {28.01}	
		BC 300	VIOLET	860.3 {30.35}	
		CB 34M	CRYSTAL VIOLET	923.2 {32.56}	
		BC 111	WHITE PEARL	931.3 {32.85}	
25F	GARNET RED MC	BC 020	REDUCER(THINNER)	88.1 {3.11}	
		BC 820	MAROON 1	423.7 {14.95}	
		BC 840	MAGENTA	658.7 {23.23}	
		BC 115	RUSSET PEARL	742.6 {26.19}	
		BC 200	CARBON BLACK 1	771.8 {27.22}	
		BC 1265	GOLD PEARL 2	796.8 {28.11}	
		BC 101	FLOP CONTROL	927.1 {32.70}	

PRIMARY COLOR MIXTURE CHART FOR BODY COLORS

COLOR CODE	COLOR NAME	KIND OF PAINT / LABEL / INGREDIENTS		POLYURETHANE	
				DIAMONT BASE g{oz}	SOLO DE DIAMONT BASE g{oz}
25G	TITANIUM GRAY M	BC 020	REDUCER(THINNER)	88.0 {3.10}	
		BC 175	MEDIURM SHINY ALUMIUIUM	639.4 {22.55}	
		BC 200	CARBON BLACK 1	739.5 {26.08}	
		BC 115	RUSSET PEARL	822.8 {29.02}	
		BC 180	COARSE ALUMINUM	866.8 {30.57}	
		BC 410	PHTALO BLUE 2	892.1 {31.47}	
		BC 300	VIOLET	915.0 {32.28}	
		BC 250	LAMP BLACK	926.7 {32.69}	
		BC 101	FLOP CONTROL	936.0 {33.02}	
25H	SILVER CONTRAIL M	BC 020	REDUCER(THINNER)	88.0 {3.10}	
		BC 171	MEDIUM ROUND ALUMINUM	787.3 {27.77}	
		BC 170	MEDIUM ALUMINIUM	854.7 {30.15}	
		BC 200	CARBON BLACK 1	883.9 {31.18}	
		BC 510	PHTALO GREEN 2	893.4 {31.51}	
		BC 406	PHTALO PEARL 3	902.6 {31.84}	
		BC 101	FLOP CONTROL	928.3 {32.74}	

PRIMARY COLOR MIXTURE CHART FOR BODY COLORS

GLASURIT

COLOR CODE	COLOR NAME	KIND OF PAINT	POLYURETHANE	
		LABEL	GLASSOMAX BASE COAT	GLASSODUR PUR TOP COAT 21-
		INGREDIENTS	g{oz}	g{oz}
A3E	CLASSIC RED CLE	352-91	173.8 {6.13}	
		A 352	646.0 {22.79}	
		A 324	910.8 {32.13}	
		A 974	918.2 {32.39}	
A4D	ARCTIC WHITE CLE	352-91	173.8 {6.13}	
		M 25	950.9 {33.54}	
		A 927	1,011.3 {35.67}	
		A 137	1,054.5 {37.20}	
		A 307	1,067.6 {37.66}	
16W	BLACK MC	M99/19	30.0 {1.06}	
		69-M505	70.0 {2.47}	
		A 098	80.0 {2.82}	
		A 531	135.0 {4.76}	
		A 555	215.0 {7.58}	
		A 926	988.0 {34.85}	
		A 105	1,000.0 {35.27}	
18J	GRACE GREEN MC	35291	174.2 {6.14}	
		M 600	288.3 {10.17}	
		A 640	561.0 {19.79}	
		A 926	791.8 {27.93}	
		A 555	880.7 {31.07}	
		A 125	891.8 {31.46}	
		M 1	919.4 {32.43}	
24E	SPARKLING SILVER M	352-91	173.8 {6.13}	
		M 99/19	748.9 {26.42}	
		M 99/20	787.5 {27.78}	
		A 136	880.4 {31.05}	
		A 926	912.0 {32.17}	
		M 306	922.1 {32.53}	
25B	BLUE PACIFIC MC	352-91	173.8 {6.13}	
		M 505	355.8 {12.55}	
		M 99/10	374.6 {13.21}	
		M 99/19	383.8 {13.54}	
		A 555	645.4 {22.77}	
		A 552	825.3 {29.11}	
		A 427	896.3 {31.62}	
		A 926	919.0 {32.42}	

PRIMARY COLOR MIXTURE CHART FOR BODY COLORS

COLOR CODE	COLOR NAME	KIND OF PAINT	POLYURETHANE	
		LABEL	GLASSOMAX BASE COAT	GLASSODUR PUR TOP COAT 21-
		INGREDIENTS	g{oz}	g{oz}
25C	CANARY YELLOW MC	GROUND COAT		
		352-91	173.8 {6.13}	
		A 143	540.1 {19.05}	
		M 25	857.1 {30.23}	
		M 146	969.4 {34.19}	
		M 306	999.0 {35.24}	
		A 974	1,007.2 {35.53}	
		COLOR BASE		
		352-91	173.8 {6.13}	
		M 010	397.9 {14.04}	
		E 910	460.6 {16.25}	
		M 0	648.4 {22.87}	
		M 105	789.1 {27.83}	
		A 143	828.4 {29.22}	
		M 146	839.8 {29.62}	
		M 1	957.2 {33.76}	
25D	SNOWFLAKE WHITE PEARL MC	GROUND COAT		
		352-91	173.8 {6.13}	
		M 25	994.0 {35.06}	
		A 927	1,036.4 {36.56}	
		A 307	1,056.0 {37.25}	
		A 137	1,070.7 {37.77}	
		A 553	1,076.4 {37.97}	
		PEARL BASE		
		352-91	173.8 {6.13}	
		M 010	224.9 {7.93}	
		M 179	247.2 {8.72}	
		M 0	810.6 {28.59}	
		M 1	905.3 {31.93}	
25E	STRATO BLUE MC	352-91	173.8 {6.13}	
		M 505	235.0 {8.29}	
		E 440	290.9 {10.26}	
		M 010	298.0 {10.51}	
		A 926	478.2 {16.87}	
		M 0	646.0 {22.79}	
		A 552	794.7 {28.03}	
		A 555	864.8 {30.50}	
		A 427	923.5 {32.57}	
25F	GARNET RED MC	352-91	173.8 {6.13}	
		M 800	248.4 {8.76}	
		M 179	270.6 {9.54}	
		A 347	569.0 {20.07}	
		A 353	778.0 {27.44}	
		A 926	804.0 {28.36}	
		M 1	919.8 {32.44}	

PRIMARY COLOR MIXTURE CHART FOR BODY COLORS

COLOR CODE	COLOR NAME	KIND OF PAINT	POLYURETHANE	
		LABEL	GLASSOMAX BASE COAT	GLASSODUR PUR TOP COAT 21-
		INGREDIENTS	g{oz}	g{oz}
25G	TITANIUM GRAY M	352-91	173.8 {6.13}	
		M 99/22	663.8 {23.41}	
		M 800	737.9 {26.03}	
		M 99/20	777.0 {27.41}	
		A 926	866.0 {30.55}	
		A 548	888.4 {31.34}	
		A 427	908.8 {32.06}	
		A 974	919.2 {32.42}	
		M 1	927.5 {32.72}	
25H	SILVER CONTTAIL M	352-91	173.8 {6.13}	
		M 99/19	795.4 {28.06}	
		M 99/12	855.3 {30.17}	
		A 926	881.3 {31.09}	
		A 696	889.8 {31.39}	
		A 555	898.0 {31.68}	
		M 1	920.8 {32.48}	

Engine Workshop Manual
L8
LF
L3

CONTENTS

Title	Section
General Information	GI
Engine	B
Technical Data	TD
Special Tools	ST

© 2002 Mazda Motor Corporation
PRINTED IN The Netherlands, MARCH 2002
1731–1E–02C

FOREWORD

This manual explains the disassembly, inspection, repair, and reassembly procedures for the above-indicated engine. In order to do these procedures safety, quickly, and correctly, you must first read this manual and any other relevant service materials carefully.

The information in this manual is current up to March, 2002. Any changes that occur after that time will not be reflected in this particular manual. Therefore, the contents of this manual may not exactly match the mechanism that you are currently serving.

Mazda Motor Corporation
HIROSHIMA, JAPAN

WARNING

Servicing a vehicle can be dangerous. If you have not received service-related training, the risks of injury, property damage, and failure of servicing increase. The recommended servicing procedures for the vehicle in this workshop manual were developed with Mazda-trained technicians in mind. This manual may be useful to non-Mazda trained technicians, but a technician with our service-related training and experience will be at less risk when performing service operations. However, all users of this manual are expected to at least know general safety procedures.

This manual contains "Warnings" and "Cautions" applicable to risks not normally encountered in a general technician's experience. They should be followed to reduce the risk of injury and the risk that improper service or repair may damage the vehicle or render it unsafe. It is also important to understand that the "Warnings" and "Cautions" are not exhaustive. It is impossible to warn of all the hazardous consequences that might result from failure to follow the procedures.

The procedures recommended and described in this manual are effective methods of performing service and repair. Some require tools specifically designed for a specific purpose. Persons using procedures and tools which are not recommended by Mazda Motor Corporation must satisfy themselves thoroughly that neither personal safety nor safety of the vehicle will be jeopardized.

The contents of this manual, including drawings and specifications, are the latest available at the time of printing, and Mazda Motor Corporation reserves the right to change the vehicle designs and alter the contents of this manual without notice and without incurring obligation.

Parts should be replaced with genuine Mazda replacement parts or with parts which match the quality of genuine Mazda replacement parts. Persons using replacement parts of lesser quality than that of genuine Mazda replacement parts must satisfy themselves thoroughly that neither personal safety nor safety of the vehicle will be jeopardized.

Mazda Motor Corporation is not responsible for any problems which may arise from the use of this manual. The cause of such problems includes but is not limited to insufficient service-related training, use of improper tools, use of replacement parts of lesser quality than that of genuine Mazda replacement parts, or not being aware of any revision of this manual.

GENERAL INFORMATION

HOW TO USE THIS MANUAL GI-2
RANGE OF TOPICS GI-2
SERVICE PROCEDURE GI-2
SYMBOLS GI-3
ADVISORY MESSAGES GI-4
UNITS GI-5
UNITS GI-5
FUNDAMENTAL PROCEDURES GI-6
PREPARATION OF TOOLS AND MEASURING EQUIPMENT GI-6
SPECIAL SERVICE TOOLS GI-6
DISASSEMBLY GI-6
INSPECTION DURING REMOVAL, DISASSEMBLY GI-7
ARRANGEMENT OF PARTS GI-7
CLEANING OF PARTS GI-7
REASSEMBLY GI-7
ADJUSTMENT GI-8
RUBBER PARTS AND TUBING GI-8
HOSE CLAMPS GI-8
TORQUE FORMULAS GI-9
VISE GI-9
SST GI-9
ELECTRICAL SYSTEM GI-10
ELECTRICAL PARTS GI-10
CONNECTORS GI-10
NEW STANDARDS GI-13
NEW STANDARDS GI-13
ABBREVIATIONS GI-15
ABBREVIATIONS GI-15

HOW TO USE THIS MANUAL

RANGE OF TOPICS

A6E201000001E01

- This manual contains procedures for performing all required service operations. The procedures are divided into the following five basic operations:
  — Removal/Installation
  — Disassembly/Assembly
  — Replacement
  — Inspection
  — Adjustment
- Simple operations which can be performed easily just by looking at the vehicle (i.e., removal/installation of parts, jacking, vehicle lifting, cleaning of parts and visual inspection) have been omitted.

SERVICE PROCEDURE

A6E201000001E02

Inspection, adjustment

- Inspection and adjustment procedures are divided into steps. Important points regarding the location and contents of the procedures are explained in detail and shown in the illustrations.

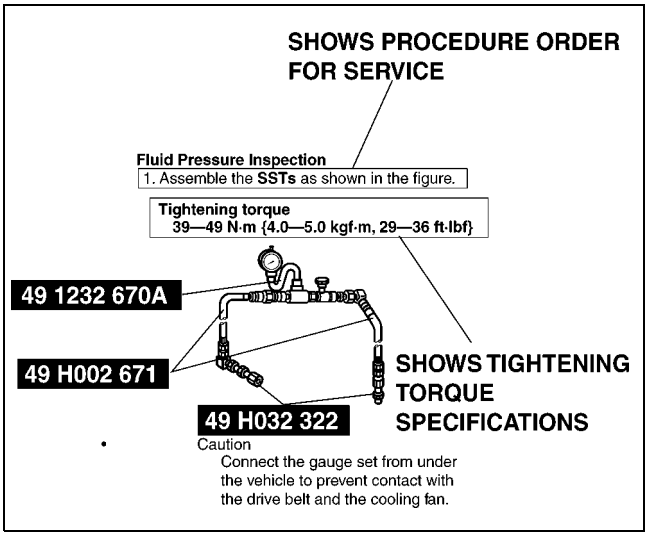

XME2010001

Repair procedure

1. Most repair operations begin with an overview illustration. It identifies the components, shows how the parts fit together and describes visual part inspection. However, only removal/installation procedures that need to be performed methodically have written instructions.
2. Expendable parts, tightening torques and symbols for oil, grease, and sealant are shown in the overview illustration. In addition, symbols indicating parts requiring the use of special service tools or equivalent are also shown.
3. Procedure steps are numbered and the part that is the main point of that procedure is shown in the illustration with the corresponding number. Occasionally, there are important points or additional information concerning a procedure. Refer to this information when servicing the related part.

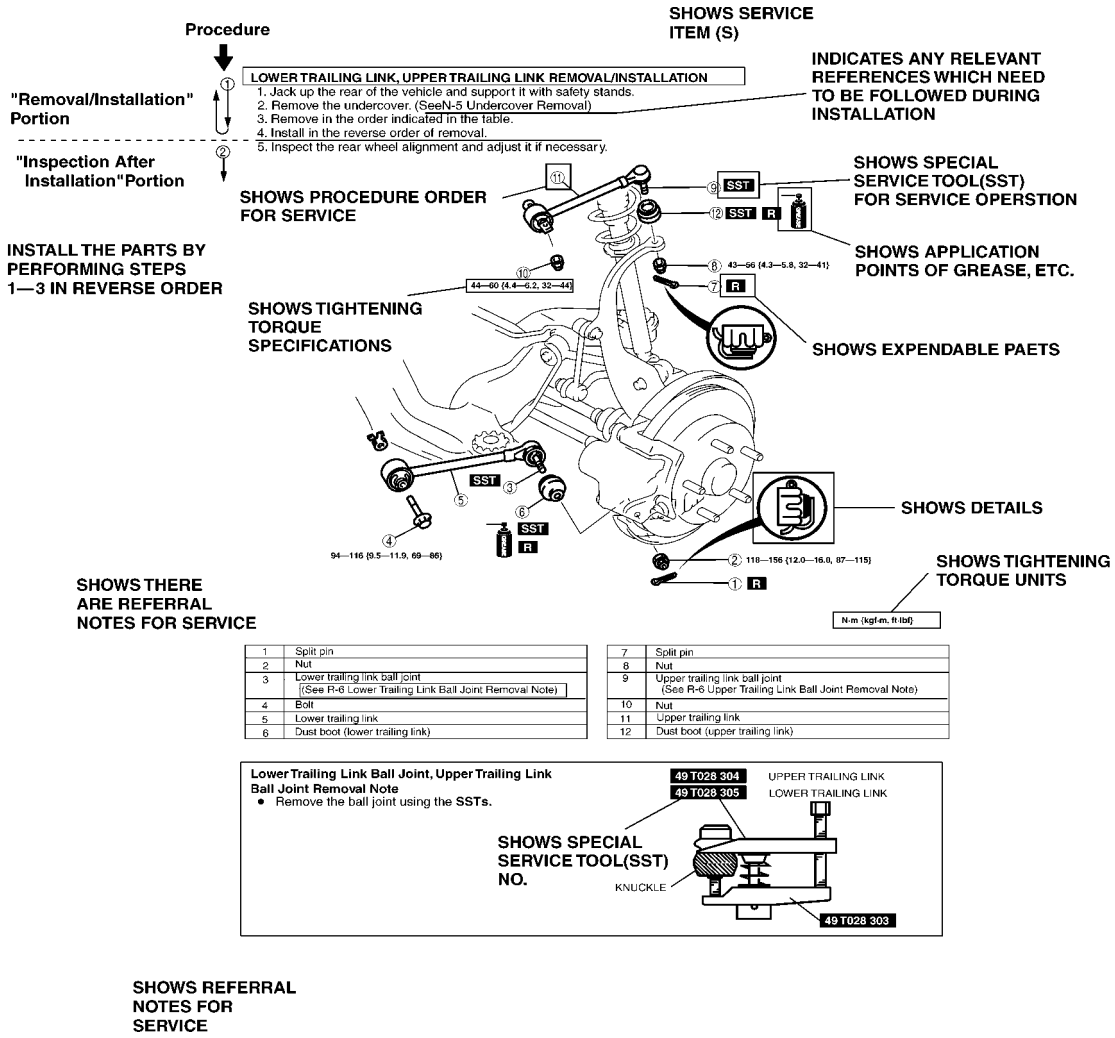

XME2010010

SYMBOLS

A6E201000001E03

- There are eight symbols indicating oil, grease, fluids, sealant, and **SST** or equivalent use. These symbols show application points or use of these materials during service.

Symbol	Meaning	Kind
	Apply oil	New appropriate engine oil or gear oil
	Apply brake fluid	New appropriate brake fluid

Symbol	Meaning	Kind
	Apply automatic transaxle/ transmission fluid	New appropriate automatic transaxle/ transmission fluid
	Apply grease	Appropriate grease
	Apply sealant	Appropriate sealant
	Apply petroleum jelly	Appropriate petroleum jelly
	Replace part	O-ring, gasket, etc.
	Use SST or equivalent	Appropriate tools

ADVISORY MESSAGES

A6E201000001E04

- You'll find several **Warnings**, **Cautions**, **Notes**, **Specifications** and **Upper and Lower Limits** in this manual.

Warning

- A Warning indicates a situation in which serious injury or death could result if the warning is ignored.

Caution

- A Caution indicates a situation in which damage to the vehicle or parts could result if the caution is ignored.

Note

- A Note provides added information that will help you to complete a particular procedure.

Specification

- The values indicate the allowable range when performing inspections or adjustments.

Upper and lower limits

- The values indicate the upper and lower limits that must not be exceeded when performing inspections or adjustments.

UNITS

UNITS

A6E201200002E01

Electrical current	A (ampere)
Electric power	W (watt)
Electric resistance	ohm
Electric voltage	V (volt)
Length	mm (millimeter)
	in (inch)
Negative pressure	kPa (kilo pascal)
	mmHg (millimeters of mercury)
	inHg (inches of mercury)
Positive pressure	kPa (kilo pascal)
	kgf/cm^2 (kilogram force per square centimeter)
	psi (pounds per square inch)
Torque	N·m (Newton meter)
	kgf·m (kilogram force meter)
	kgf·cm (kilogram force centimeter)
	ft·lbf (foot pound force)
	in·lbf (inch pound force)
Volume	L (liter)
	US qt (U.S. quart)
	Imp qt (Imperial quart)
	ml (milliliter)
	cc (cubic centimeter)
	cu in (cubic inch)
	fl oz (fluid ounce)
Weight	g (gram)
	oz (ounce)

Conversion to SI Units (Système International d'Unités)

- All numerical values in this manual are based on SI units. Numbers shown in conventional units are converted from these values.

Rounding Off

- Converted values are rounded off to the same number of places as the SI unit value. For example, if the SI unit value is 17.2 and the value after conversion is 37.84, the converted value will be rounded off to 37.8.

Upper and Lower Limits

- When the data indicates upper and lower limits, the converted values are rounded down if the SI unit value is an upper limit and rounded up if the SI unit value is a lower limit. Therefore, converted values for the same SI unit value may differ after conversion. For example, consider 2.7 kgf/cm^2 in the following specifications:

  210—260 kPa {2.1—2.7 kgf/cm^2, 30—38 psi}
  270—310 kPa {2.7—3.2 kgf/cm^2, 39—45 psi}

- The actual converted values for 2.7 kgf/cm^2 are 264 kPa and 38.4 psi. In the first specification, 2.7 is used as an upper limit, so the converted values are rounded down to 260 and 38. In the second specification, 2.7 is used as a lower limit, so the converted values are rounded up to 270 and 39.

FUNDAMENTAL PROCEDURES

PREPARATION OF TOOLS AND MEASURING EQUIPMENT

- Be sure that all necessary tools and measuring equipment are available before starting any work.

A6E201400004E02

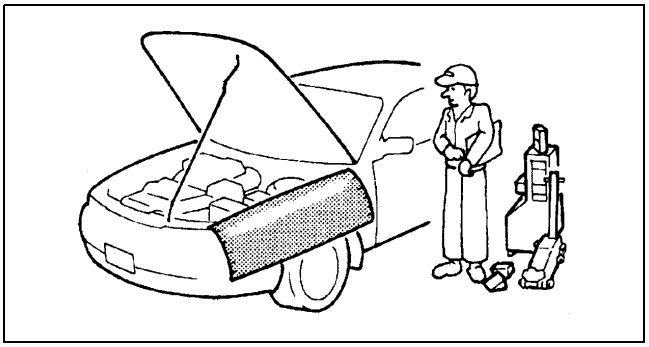

X3U000WAH

SPECIAL SERVICE TOOLS

- Use special service tools or equivalent when they are required.

A6E201400004E03

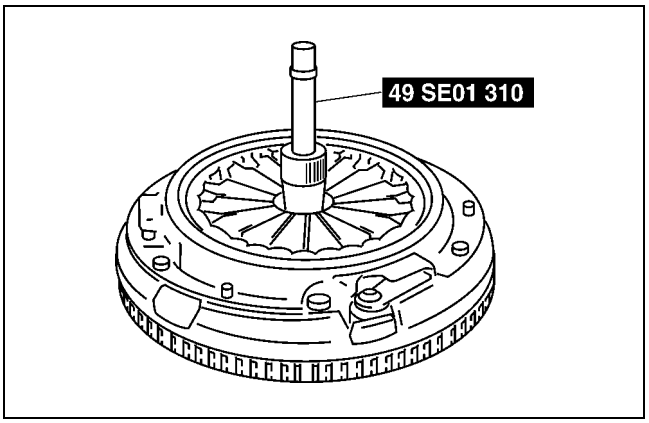

X3U000WAJ

DISASSEMBLY

- If the disassembly procedure is complex, requiring many parts to be disassembled, all parts should be marked in a place that will not affect their performance or external appearance and identified so that reassembly can be performed easily and efficiently.

A6E201400004E07

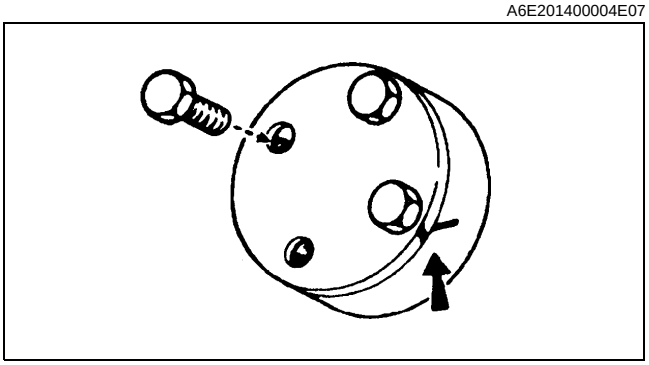

X3U000WAL

INSPECTION DURING REMOVAL, DISASSEMBLY

- When removed, each part should be carefully inspected for malfunction, deformation, damage, and other problems.

A6E201400004E08

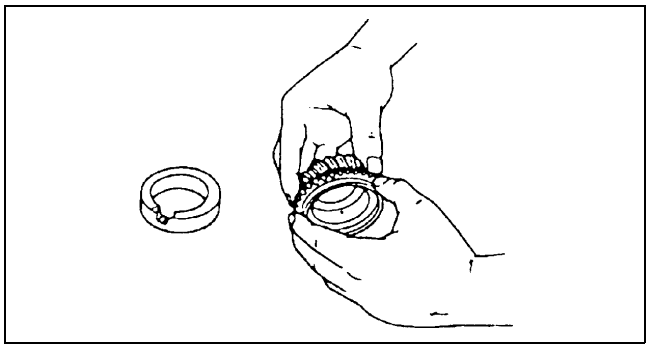

X3U000WAM

ARRANGEMENT OF PARTS

- All disassembled parts should be carefully arranged for reassembly.
- Be sure to separate or otherwise identify the parts to be replaced from those that will be reused.

A6E201400004E09

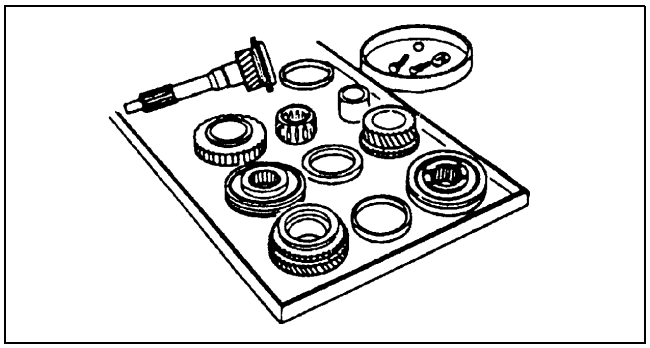

X3U000WAN

CLEANING OF PARTS

- All parts to be reused should be carefully and thoroughly cleaned in the appropriate method.

  Warning
  - **Using compressed air can cause dirt and other particles to fly out causing injury to the eyes. Wear protective eye wear whenever using compressed air.**

A6E201400004E10

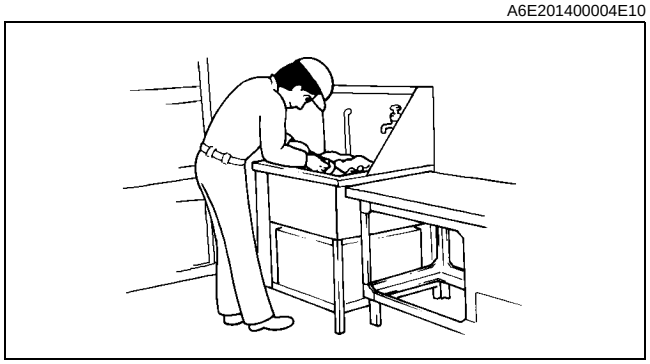

WGIWXX0030J

REASSEMBLY

- Standard values, such as torques and certain adjustments, must be strictly observed in the reassembly of all parts.
- If removed, these parts should be replaced with new ones:
  — Oil seals
  — Gaskets
  — O-rings
  — Lockwashers
  — Cotter pins
  — Nylon nuts

A6E201400004E11

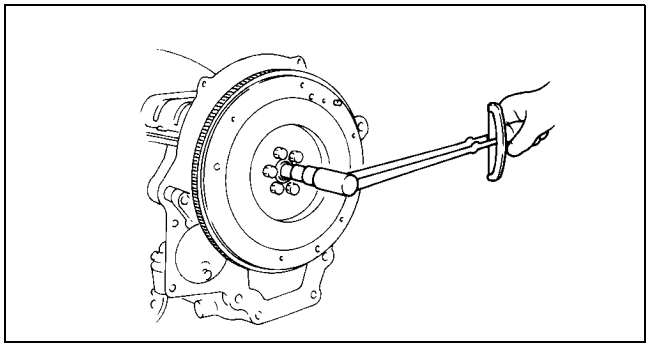

WGIWXX0031J

- Depending on location:
  — Sealant and gaskets, or both, should be applied to specified locations. When sealant is applied, parts should be installed before sealant hardens to prevent leakage.
  — Oil should be applied to the moving components of parts.
  — Specified oil or grease should be applied at the prescribed locations (such as oil seals) before reassembly.

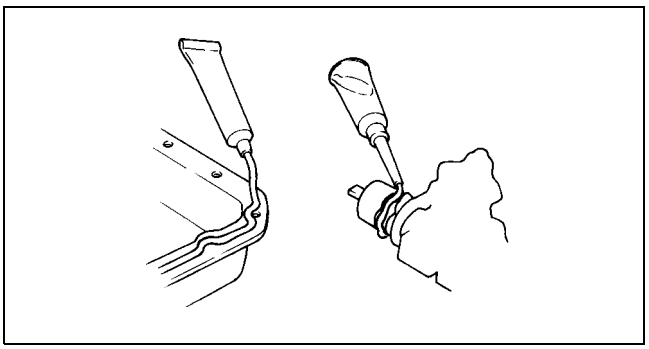

WGIWXX0032J

ADJUSTMENT

A6E201400004E12

- Use suitable gauges and/or testers when making adjustments.

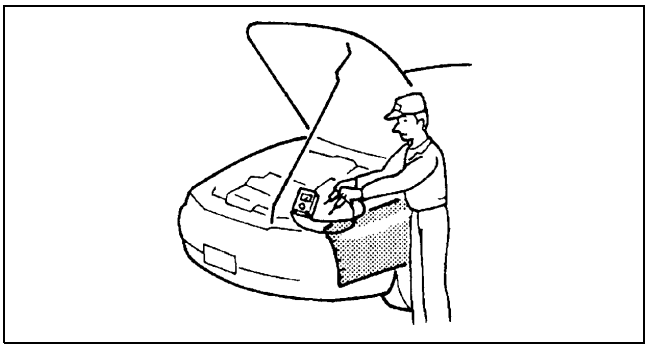

X3U000WAS

RUBBER PARTS AND TUBING

A6E201400004E13

- Prevent gasoline or oil from getting on rubber parts or tubing.

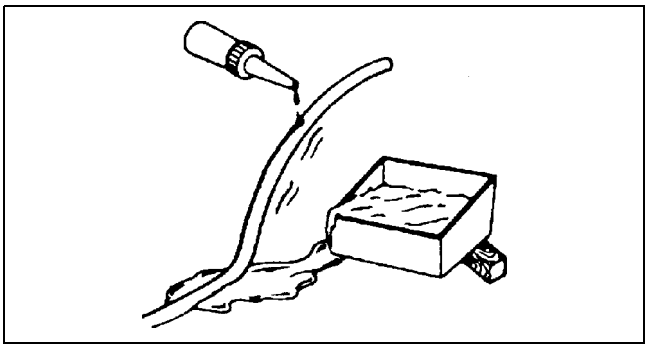

WGIWXX0034E

HOSE CLAMPS

A6E201400004E14

- When reinstalling, position the hose clamp in the original location on the hose and squeeze the clamp lightly with large pliers to ensure a good fit.

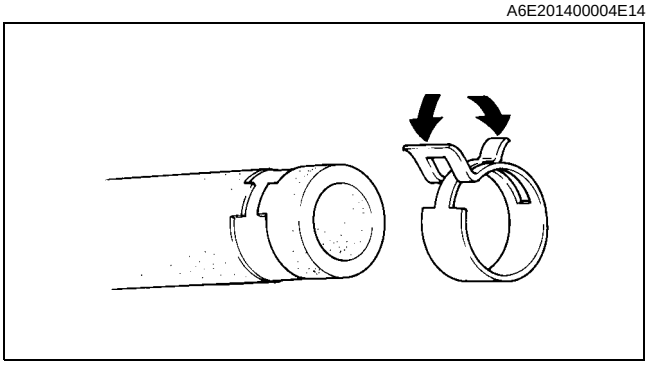

WGIWXX0035J

TORQUE FORMULAS

- When using a torque wrench-**SST** or equivalent combination, the written torque must be recalculated due to the extra length that the **SST** or equivalent adds to the torque wrench. Recalculate the torque using the following formulas. Choose the formula that applies to you.

Torque Unit	Formula
N·m	N·m × [L/(L+A)]
kgf·m	kgf·m × [L/(L+A)]
kgf·cm	kgf·cm × [L/(L+A)]
ft·lbf	ft·lbf × [L/(L+A)]
in·lbf	in·lbf × [L/(L+A)]

A : The length of the **SST** past the torque wrench drive
L : The length of the torque wrench

A6E201400004E15

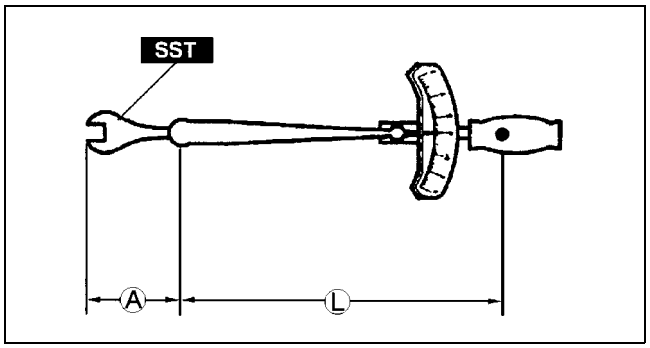

WGIWXX0036E

VISE

- When using a vise, put protective plates in the jaws of the vise to prevent damage to parts.

A6E201400004E16

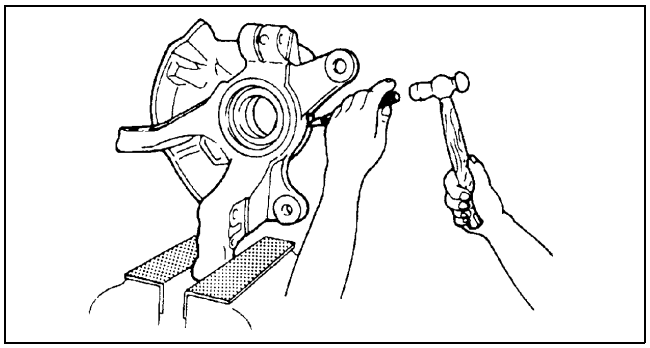

X3U000WAW

SST

A6E201400004E18

- Some Ford **SST** or equivalent are used as **SSTs** necessary for engine repair. Note that these **SSTs** are marked with Ford **SST** numbers.
- Note that a Ford **SST** number is written together with a corresponding Mazda **SST** number as shown below.

Example (section ST)

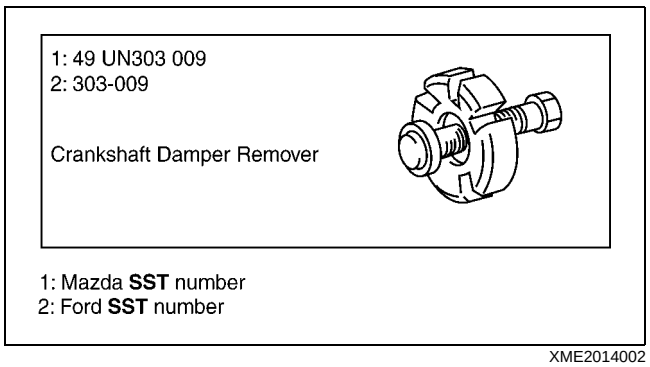

XME2014002

Example (except section ST)

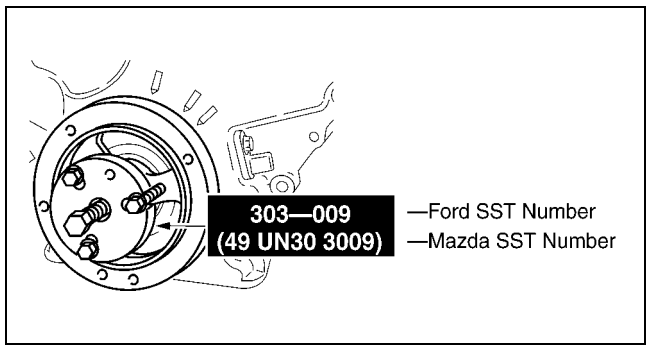

XME2014001

ELECTRICAL SYSTEM

ELECTRICAL PARTS

A6E201700006E01

Battery cable

- Before disconnecting connectors or removing electrical parts, disconnect the negative battery cable.

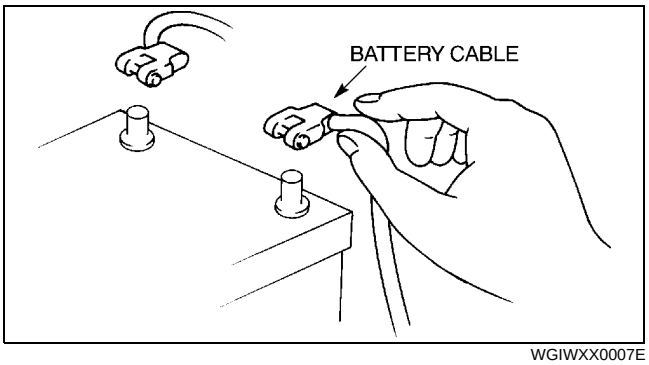

WGIWXX0007E

Wiring Harness

- To remove the wiring harness from the clip in the engine room, pry up the hook of the clip using a flathead screwdriver.

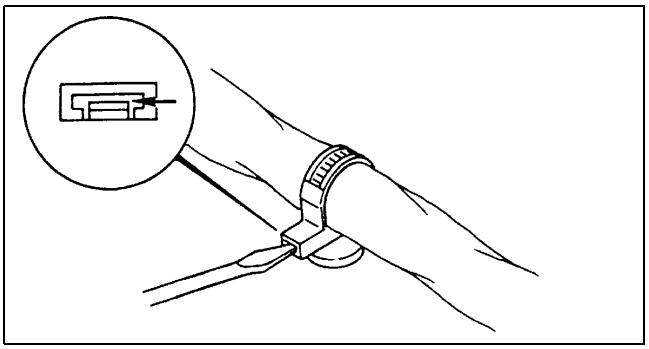

X3U000WBU

CONNECTORS

A6E201700006E02

Data link connector

- Insert the probe into the terminal when connecting a jumper wire to the data link connector.

Caution

- **Inserting a jumper wire probe into the data link connector terminal may damage the terminal.**

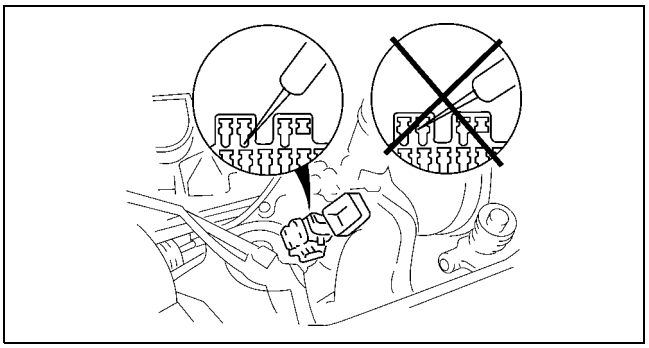

X3U000WAY

Disconnecting connectors

- When disconnecting connector, grasp the connectors, not the wires.

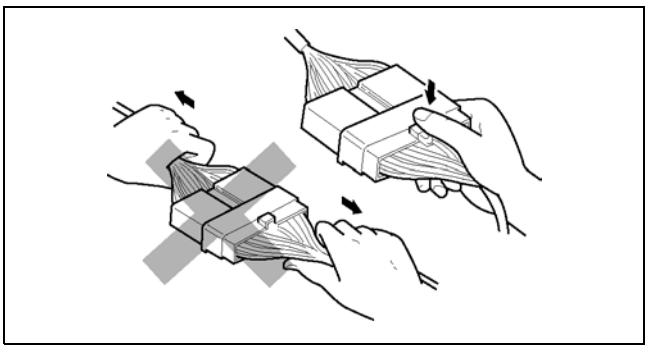

WGIWXX0041E

- Connectors can be disconnected by pressing or pulling the lock lever as shown.

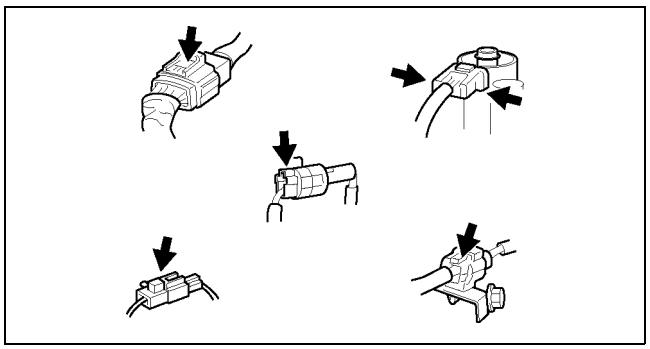

WGIWXX0042E

Locking connector

- When locking connectors, listen for a click indicating they are securely locked.

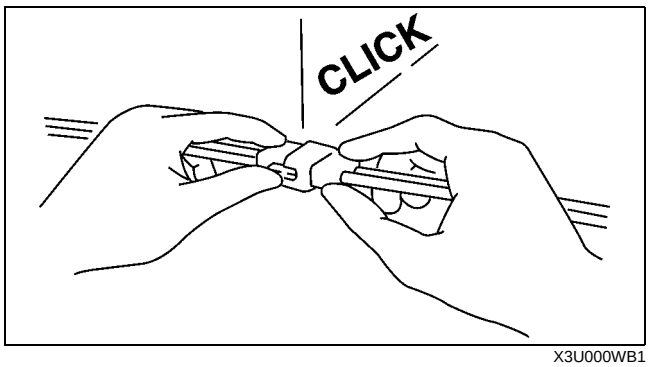

X3U000WB1

Inspection

- When a tester is used to inspect for continuity or measuring voltage, insert the tester probe from the wiring harness side.

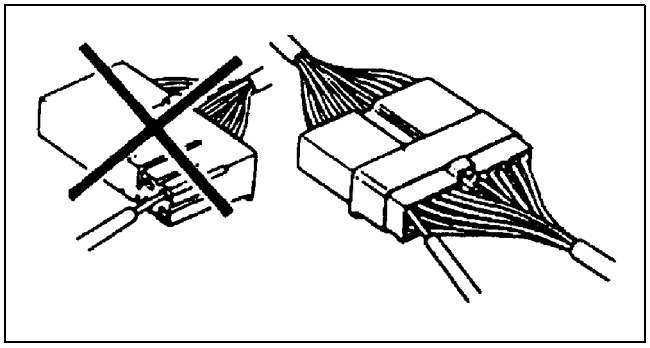

X3U000WB2

- Inspect the terminals of waterproof connectors from the connector side since they cannot be accessed from the wiring harness side.

  Caution

  - **To prevent damage to the terminal, wrap a thin wire around the tester probe before inserting into terminal.**

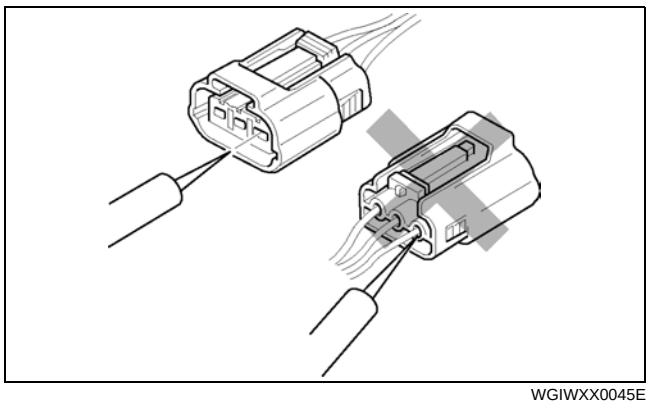

WGIWXX0045E

Terminals
Inspection

- Pull lightly on individual wires to verify that they are secured in the terminal.

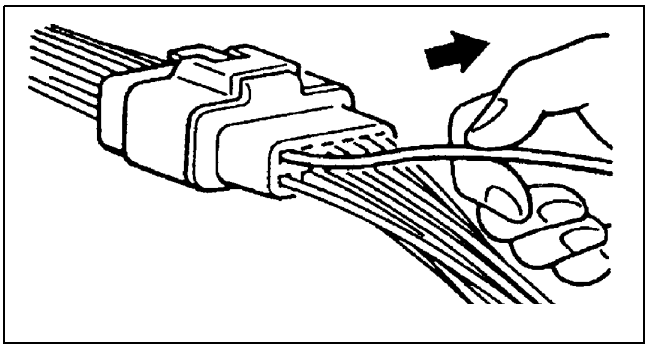

X3U000WB4

Wiring Harness
Wiring color codes

- Two-color wires are indicated by a two-color code symbol.
- The first letter indicates the base color of the wire and the second the color of the stripe.

CODE	COLOR	CODE	COLOR
B	Black	O	Orange
BR	Brown	P	Pink
G	Green	R	Red
GY	Gray	V	Violet
L	Blue	W	White
LB	Light Blue	Y	Yellow
LG	Light Green		

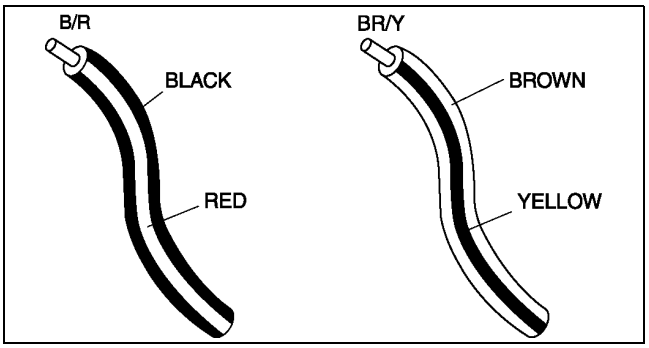

X3U000WB7

NEW STANDARDS

NEW STANDARDS

A6E202800020E01

- Following is a comparison of the previous standard and the new standard.

New Standard		Previous Standard		Remark
Abbreviation	Name	Abbreviation	Name	
AP	Accelerator Pedal	—	Accelerator Pedal	
ACL	Air Cleaner	—	Air Cleaner	
A/C	Air Conditioning	—	Air Conditioning	
BARO	Barometric Pressure	—	Atmospheric Pressure	
B+	Battery Positive Voltage	Vb	Battery Voltage	
—	Brake Switch	—	Stoplight Switch	
—	Calibration Resistor	—	Corrected Resistance	#6
CMP sensor	Camshaft Position Sensor	—	Crank Angle Sensor	
CAC	Charge Air Cooler	—	Intercooler	
CLS	Closed Loop System	—	Feedback System	
CTP	Closed Throttle Position	—	Fully Closed	
CPP	Clutch Pedal Position	—	Idle Switch	
CIS	Continuous Fuel Injection System	—	Clutch Position	
CS sensor	Control Sleeve Sensor	CSP sensor	Control Sleeve Position Sensor	#6
CKP sensor	Crankshaft Position Sensor	—	Crank Angle Sensor 2	
DLC	Data Link Connector	—	Diagnosis Connector	
DTM	Diagnostic Test Mode	—	Test Mode	#1
DTC	Diagnostic Trouble Code(s)	—	Service Code(s)	
DI	Distributor Ignition	—	Spark Ignition	
DLI	Distributorless Ignition	—	Direct Ignition	
EI	Electronic Ignition	—	Electronic Spark Ignition	#2
ECT	Engine Coolant Temperature	—	Water Thermo	
EM	Engine Modification	—	Engine Modification	
—	Engine Speed Input Signal	—	Engine RPM Signal	
EVAP	Evaporative Emission	—	Evaporative Emission	
EGR	Exhaust Gas Recirculation	—	Exhaust Gas Recirculation	
FC	Fan Control	—	Fan Control	
FF	Flexible Fuel	—	Flexible Fuel	
4GR	Fourth Gear	—	Overdrive	
—	Fuel Pump Relay	—	Circuit Opening Relay	#3
FSO solenoid	Fuel Shut Off Solenoid	FCV	Fuel Cut Valve	#6
GEN	Generator	—	Alternator	
GND	Ground	—	Ground/Earth	
HO2S	Heated Oxygen Sensor	—	Oxygen Sensor	With heater
IAC	Idle Air control	—	Idle Speed Control	
—	IDM Relay	—	Spill Valve Relay	#6
—	Incorrect Gear Ratio	—	—	
—	Injection Pump	FIP	Fuel Injection Pump	#6
—	Input/Turbine Speed Sensor	—	Pulse Generator	
IAT	Intake Air Temperature	—	Intake Air Thermo	
KS	Knock Sensor	—	Knock Sensor	
MIL	Malfunction Indicator Lamp	—	Malfunction Indicator Light	
MAP	Manifold Absolute Pressure	—	Intake Air Pressure	
MAF sensor	Mass Air Flow Sensor	—	Airflow Sensor	
MFL	Multiport Fuel Injection	—	Multiport Fuel Injection	
OBD	On-Board Diagnostic	—	Diagnosis/SelfDiagnosis	
OL	Open Loop	—	Open Loop	

New Standard		Previous Standard		Remark
Abbrevi-ation	Name	Abbrevi-ation	Name	
—	Output Speed Sensor	—	Vehicle Speed Sensor 1	
OC	Oxidation Catalytic Converter	—	Catalytic Converter	
O2S	Oxygen Sensor	—	Oxygen Sensor	
PNP	Park/Neutral Position	—	Park/Neutral Range	
—	PCM Control Relay	—	Main Relay	#6
PSP	Power Steering Pressure	—	Power Steering Pressure	
PCM	Powertrain Control Module	ECU	Engine Control Unit	#4
—	Pressure Control Solenoid	—	Line Pressure Solenoid Valve	
PAIR	Pulsed Secondary Air Injection	—	Secondary Air Injection System	Pulsed injection
—	Pump Speed Sensor	—	NE Sensor	#6
AIR	Secondary Air Injection	—	Secondary Air Injection System	Injection with air pump
SAPV	Secondary Air Pulse Valve	—	Reed Valve	
SFI	Sequential Multipoint Fuel Injection	—	Sequential Fuel Injection	
—	Shift Solenoid A	—	1–2 Shift Solenoid Valve	
		—	Shift A Solenoid Valve	
—	Shift Solenoid B	—	2–3 Shift Solenoid Valve	
		—	Shift B Solenoid Valve	
—	Shift Solenoid C	—	3–4 Shift Solenoid Valve	
3GR	Third Gear	—	3rd Gear	
TWC	Three Way Catalytic Converter	—	Catalytic Converter	
TB	Throttle Body	—	Throttle Body	
TP sensor	Throttle Position Sensor	—	Throttle Sensor	
TCV	Timer Control Valve	TCV	Timing Control Valve	#6
TCC	Torque Converter Clutch	—	Lockup Position	
TCM	Transmission (Transaxle) Control Module	—	ECAT Control Unit	
—	Transmission (Transaxle) Fluid Temperature Sensor	—	ATF Thermosensor	
TR	Transmission (Transaxle) Range	—	Inhibitor Position	
TC	Turbocharger	—	Turbocharger	
VSS	Vehicle Speed Sensor	—	Vehicle Speed Sensor	
VR	Voltage Regulator	—	IC Regulator	
VAF sensor	Volume Air Flow Sensor	—	Air flow Sensor	
WUTWC	Warm Up Three Way Catalytic Converter	—	Catalytic Converter	#5
WOT	Wide Open Throttle	—	Fully Open	

#1 : Diagnostic trouble codes depend on the diagnostic test mode
#2 : Controlled by the PCM
#3 : In some models, there is a fuel pump relay that controls pump speed. That relay is now called the fuel pump relay (speed).
#4 : Device that controls engine and powertrain
#5 : Directly connected to exhaust manifold
#6 : Part name of diesel engine

ABBREVIATIONS

ABBREVIATIONS

A6E203000011E01

MTX	Manual transaxle
ATX	Automatic transaxle
ATDC	After top dead center
TDC	Top dead center
IN	Intake
EX	Exhaust
EGR	Exhaust gas recirculation
OCV	Oil control valve
SST	Special service tool

ENGINE

ENGINE B-2
ENGINE OVERHAUL SERVICE WARNING B-2
ENGINE MOUNTING/DISMOUNTING B-2
TIMING CHAIN DISASSEMBLY B-3
CYLINDER HEAD (I) DISASSEMBLY B-5
CYLINDER HEAD (II) DISASSEMBLY B-7
CYLINDER BLOCK (I) DISASSEMBLY B-9
CYLINDER BLOCK (II) DISASSEMBLY B-10
CYLINDER HEAD INSPECTION B-11
VALVE, VALVE GUIDE INSPECTION B-12
VALVE GUIDE REPLACEMENT B-13
VALVE SEAT INSPECTION/REPAIR B-15
VALVE SPRING INSPECTION B-15
CAMSHAFT INSPECTION B-16
TAPPET INSPECTION B-17
CYLINDER BLOCK INSPECTION B-18
OIL JET VALVE INSPECTION B-19
PISTON INSPECTION B-19
CRANKSHAFT INSPECTION B-20
CONNECTING ROD INSPECTION B-22
BOLT INSPECTION B-22
VARIABLE VALVE TIMING ACTUATOR INSPECTION B-23
OIL CONTROL VALVE (OCV) INSPECTION B-23
VALVE CLEARANCE INSPECTION B-24
VALVE CLEARANCE ADJUSTMENT B-25
CYLINDER BLOCK (I) ASSEMBLY B-29
CYLINDER BLOCK (II) ASSEMBLY B-34
CYLINDER HEAD (I) ASSEMBLY B-37
CYLINDER HEAD (II) ASSEMBLY B-39
TIMING CHAIN ASSEMBLY B-41

ENGINE

ENGINE OVERHAUL SERVICE WARNING

A6E242402000E01

Warning
- **Continuous exposure with USED engine oil has caused skin cancer in laboratory mice. Protect your skin by washing with soap and water immediately after this work.**

ENGINE MOUNTING/DISMOUNTING

A6E242402000E02

1. Install the **SSTs** (arms) to the cylinder block holes as shown, and hand-tighten the bolts **(part No.: 9YA20-1003) or M10×1.5T length 90 mm {3.55 in}**.

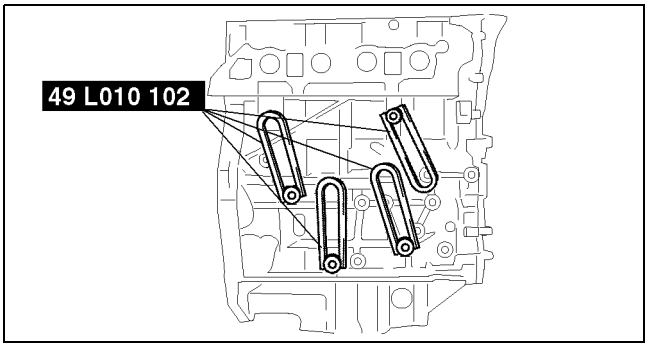

AME2224E065

2. Assemble the **SSTs** (bolts, nuts and plate) to the specified positions.
3. Adjust the **SSTs** (bolts) so that less than **20 mm {0.79 in}** of thread is exposed.
4. Make the **SSTs** (arms and plate) parallel by adjusting the **SSTs** (bolts and nuts).

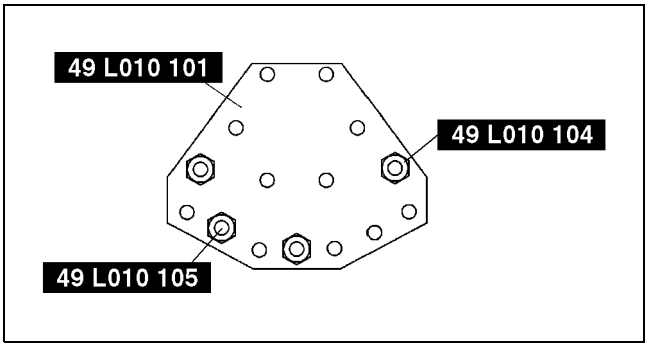

AME2224E300

5. Tighten the **SSTs** (bolts and nuts) to affix the **SSTs** firmly.

Warning
- **Self-locking brake system of the engine stand may not be effective when the engine is held in an unbalanced position. This could lead to sudden, rapid movement of the engine and mounting stand handle and cause serious injury. Never keep the engine in an unbalanced position, and always hold the rotating handle firmly when turning the engine.**

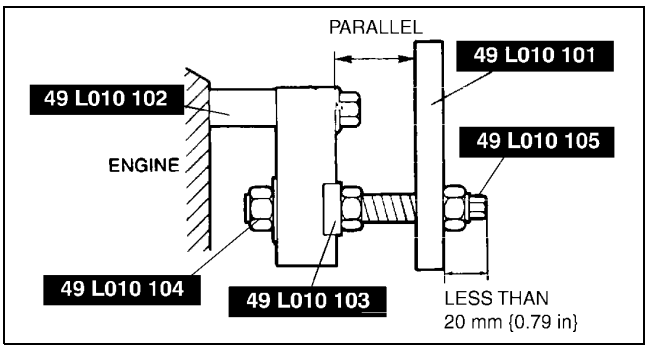

AME2224E301

6. Mount the engine on the **SST** (engine stand).
7. Drain the engine oil into a container.
8. Clean the flange surface (seal rubber) of the oil pan drain plug, then install the oil pan drain plug.

Tightening torque
20—30 N·m {2.1—3.0 kgf·m, 15—22 ft·lbf}

DISMOUNTING

- Dismount in the reverse order of mounting.

TIMING CHAIN DISASSEMBLY

A6E242402000E04

1. Disassemble in the order indicated in the table.

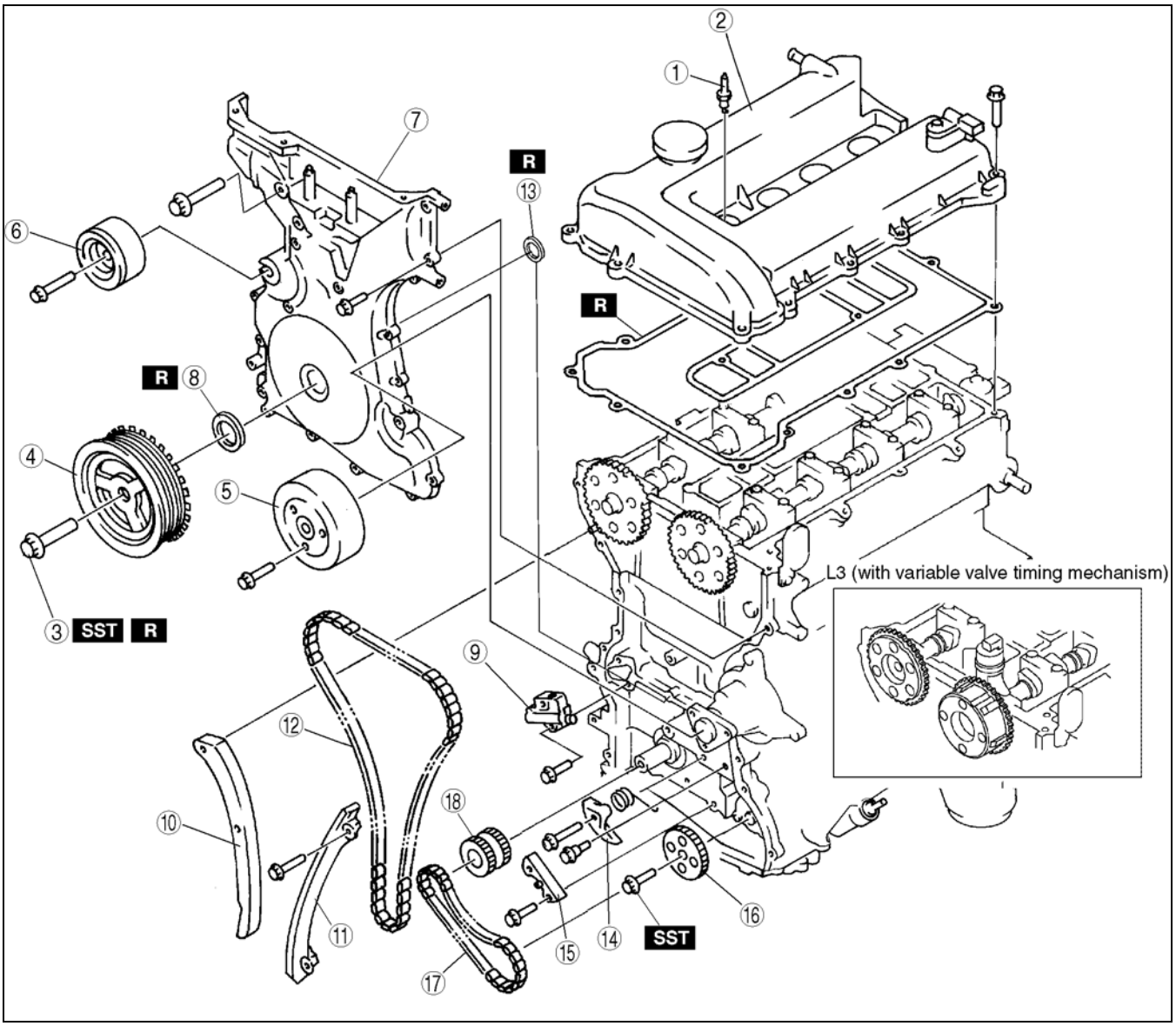

AME2224E337

1	Spark plug
2	Cylinder head cover
3	Crankshaft pulley lock bolt (See B–4 Crankshaft Pulley Lock Bolt Disassembly Note)
4	Crankshaft pulley
5	Water pump pulley
6	Drive belt idler pulley
7	Engine front cover
8	Front oil seal (See B–4 Front Oil Seal Disassembly Note)

9	Chain tensioner (See B–4 Chain Tensioner Disassembly Note)
10	Tensioner arm
11	Chain guide
12	Timing chain
13	Seal (L3 (with variable valve timing mechanism))
14	Oil pump chain tensioner
15	Oil pump chain guide
16	Oil pump sprocket (See B–4 Oil Pump Sprocket Disassembly Note)
17	Oil pump chain
18	Crankshaft sprocket

Crankshaft Pulley Lock Bolt Disassembly Note

1. Hold the crankshaft using the SST.
2. Remove the crankshaft pulley lock bolt.

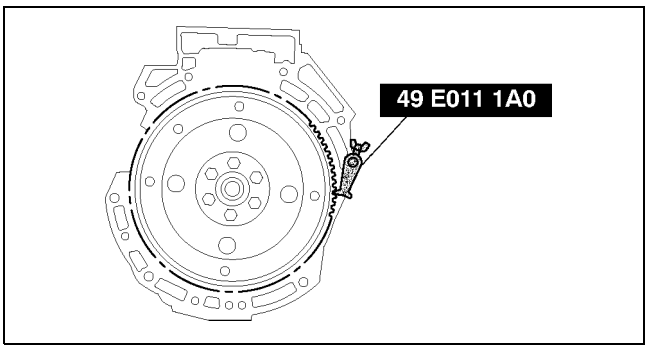

AME2224E106

Front Oil Seal Disassembly Note

1. Remove the oil seal using a screwdriver.

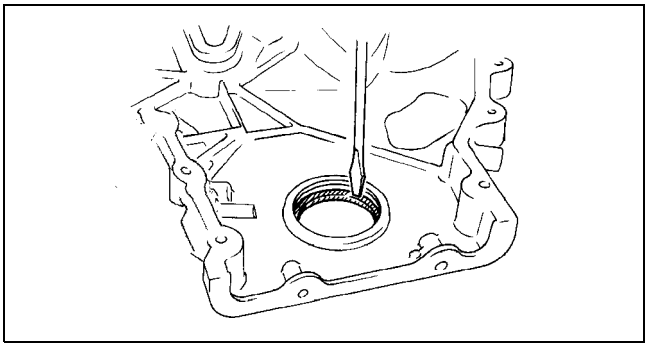

AME2224E338

Chain Tensioner Disassembly Note

1. Hold the chain tensioner ratchet lock mechanism away from the ratchet stem with a thin screwdriver.
2. Slowly press the tensioner piston.
3. Hold the chain tensioner piston with a **1.5 mm {0.06 in}** wire or paper clip.

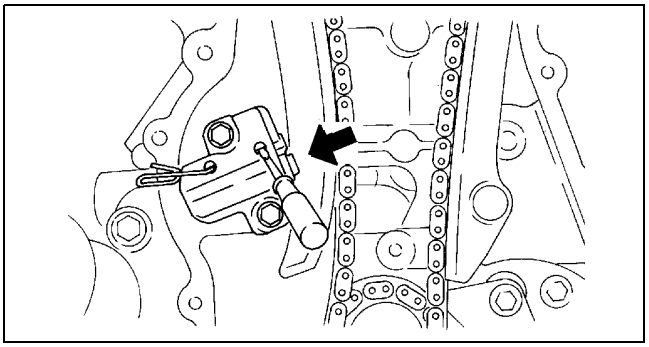

AME2224E339

Oil Pump Sprocket Disassembly Note

1. Hold the oil pump sprocket using the **SST**.

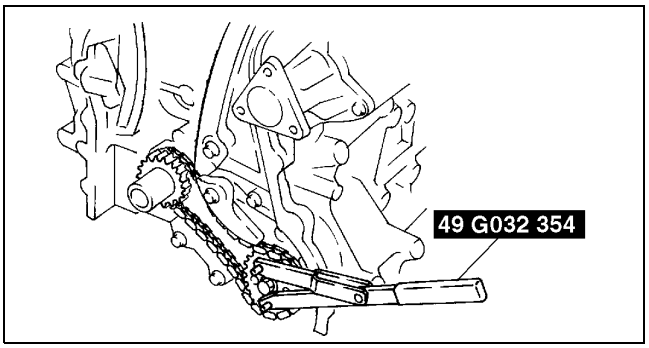

AME2224E340

CYLINDER HEAD (I) DISASSEMBLY

A6E242402000E05

1. Disassemble in the order indicated in the table.

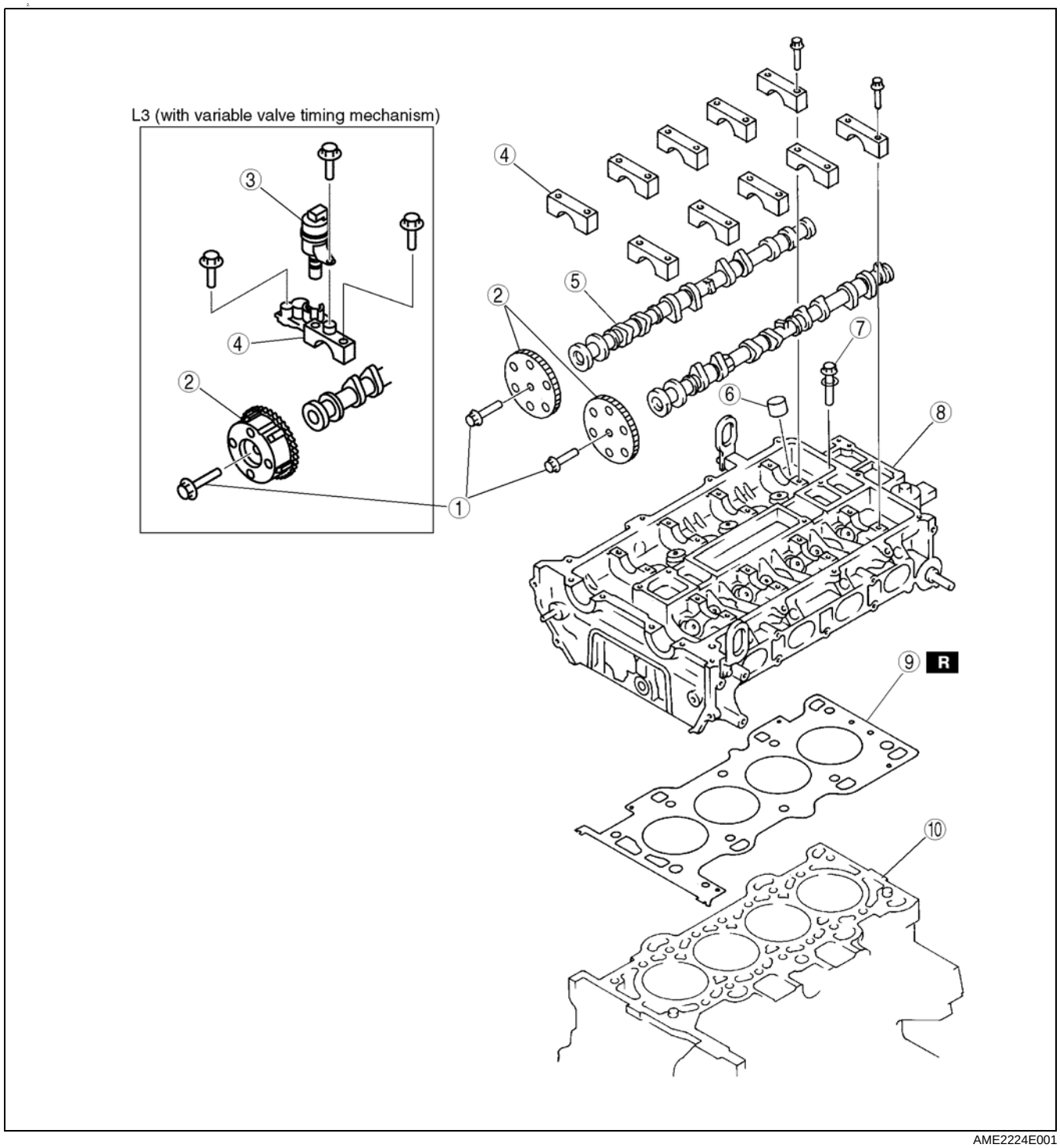

AME2224E001

1	Camshaft sprocket lock bolt,Variable valve timing actuator lock bolt (L3 (with variable valve timing mechanism)) (See B–6 Camshaft Sprocket Lock Bolt, Variable Valve Timing Actuator Lock Bolt (L3 (with variable valve timing mechanism)) Disassembly Note)
2	Camshaft sprocket,Variable valve timing actuator (L3 (with variable valve timing mechanism))
3	Oil control valve (OCV) (L3 (with variable valve timing mechanism))

4	Camshaft cap (See B–6 Camshaft Cap Disassembly Note)
5	Camshaft
6	Tappet (See B–7 Tappet Disassembly Note)
7	Cylinder head bolt (See B–7 Cylinder Head Bolt Disassembly Note)
8	Cylinder head
9	Cylinder head gasket
10	Cylinder block

Camshaft Sprocket Lock Bolt, Variable Valve Timing Actuator Lock Bolt (L3 (with variable valve timing mechanism)) Disassembly Note

1. Hold the camshaft by using a wrench on the cast hexagon as shown, and loosen the camshaft sprocket lock bolt or variable valve timing actuator lock bolt (L3 (with variable valve timing mechanism)).

L8, LF, L3

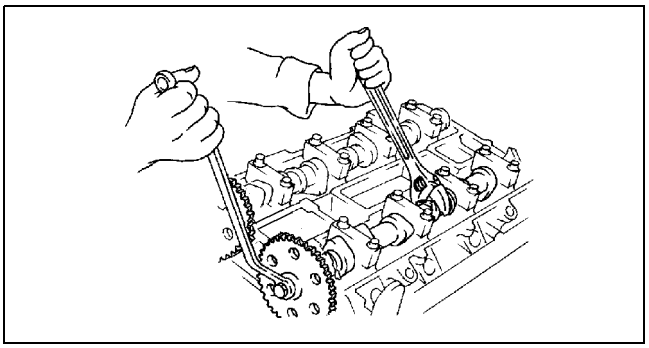

AME2224E077

L3 (with variable valve timing mechanism)

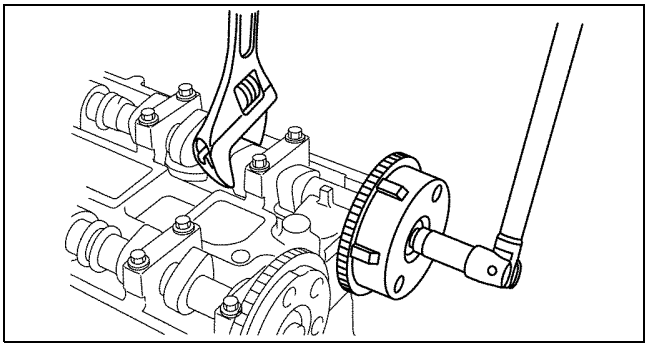

AME2224E078

Camshaft Cap Disassembly Note

1. Before removing the camshaft caps, inspect the following.
   — Camshaft end play and camshaft journal oil clearance (See B–16 CAMSHAFT INSPECTION.)

   Note
   - The camshaft caps are numbered to make sure they are assembled in their original positions. When removed, keep the caps with the cylinder head they were removed from. Do not mix the caps.

2. Loosen the camshaft caps bolts in two or three steps in the order shown.

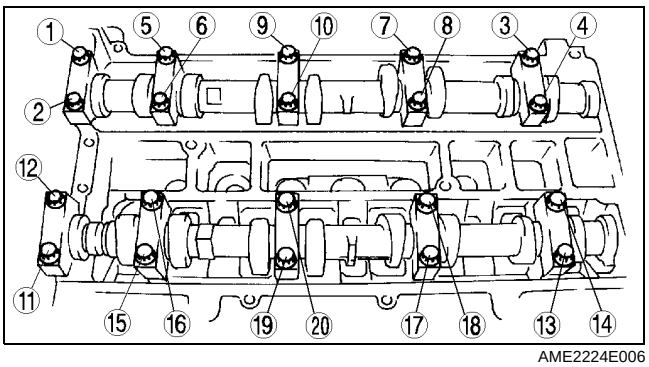

AME2224E006

Tappet Disassembly Note

Note

- The tappets are numbered to make sure they are assembled in their original positions. When removed, keep the tappets with the cylinder head they were removed from. Do not mix the tappets.

Cylinder Head Bolt Disassembly Note

1. Loosen the cylinder head bolts in two or three steps in the order shown.

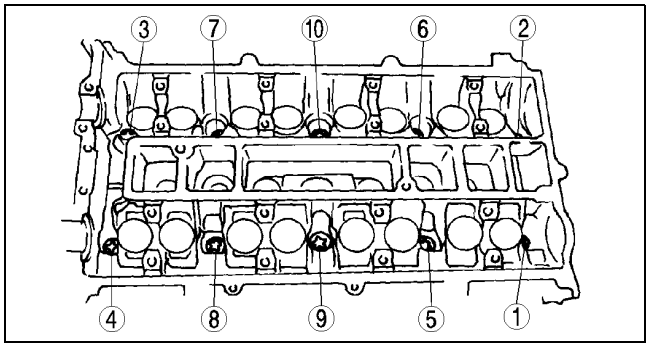

AME2224E005

CYLINDER HEAD (II) DISASSEMBLY

A6E242402000E06

1. Disassemble in the order indicated in the table.

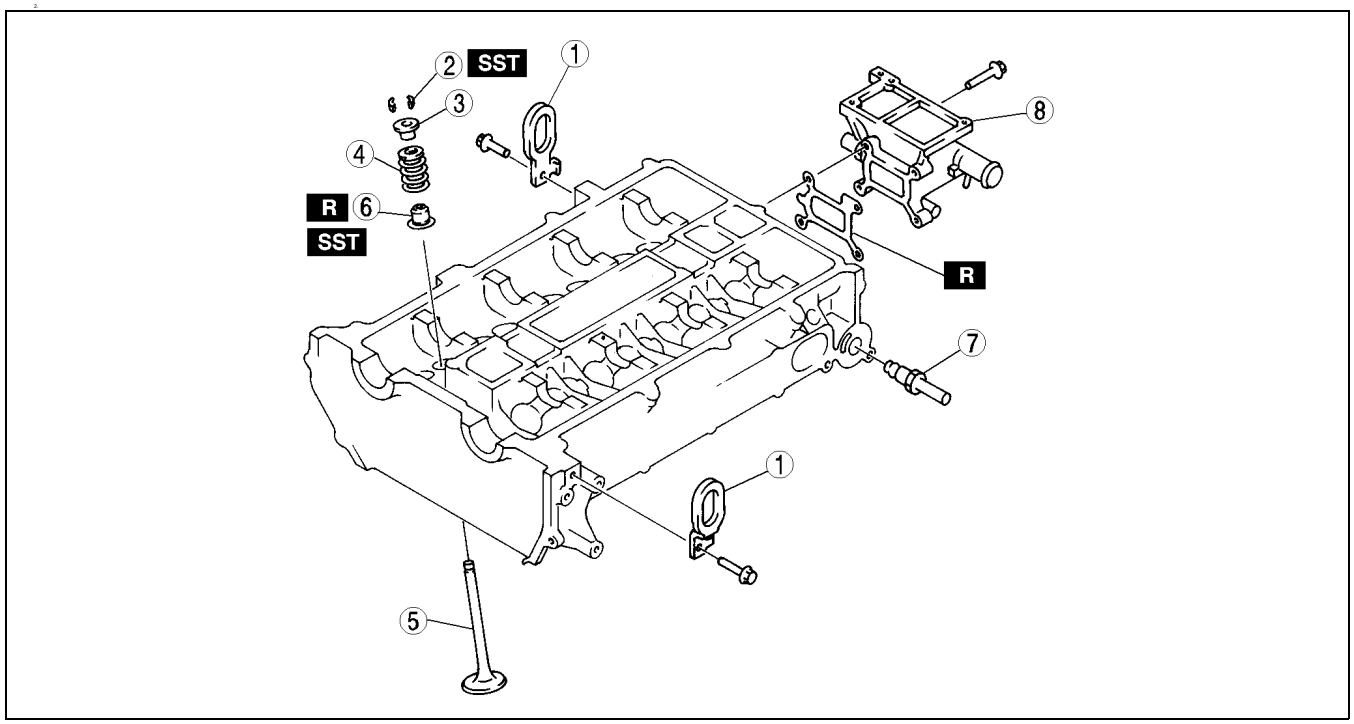

AME2224E008

1	Engine hanger
2	Valve keeper (See B–8 Valve Keeper Disassembly Note)
3	Upper valve spring seat
4	Valve spring

5	Valve
6	Valve seal (See B–8 Valve Seal Disassembly Note)
7	EGR pipe
8	Water outlet case

Valve Keeper Disassembly Note

1. Remove the valve keeper using the **SSTs**.

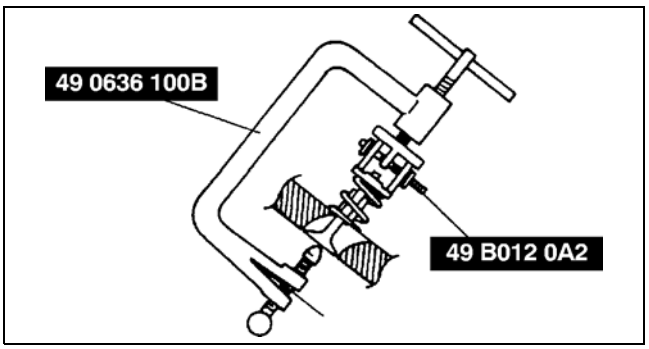

AME2224E302

Valve Seal Disassembly Note

1. Remove the valve seal using the **SST**.

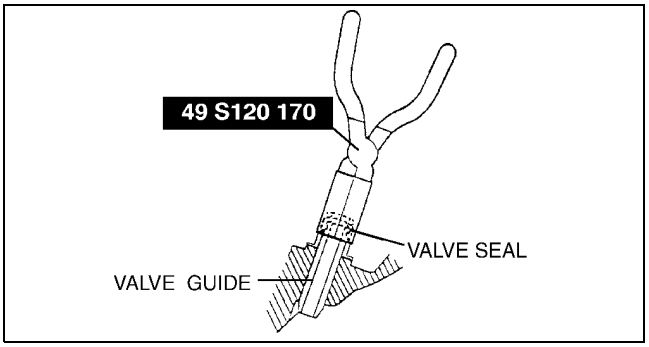

AME2224E303

CYLINDER BLOCK (I) DISASSEMBLY

A6E242402000E07

1. Disassemble in the order indicated in the table.

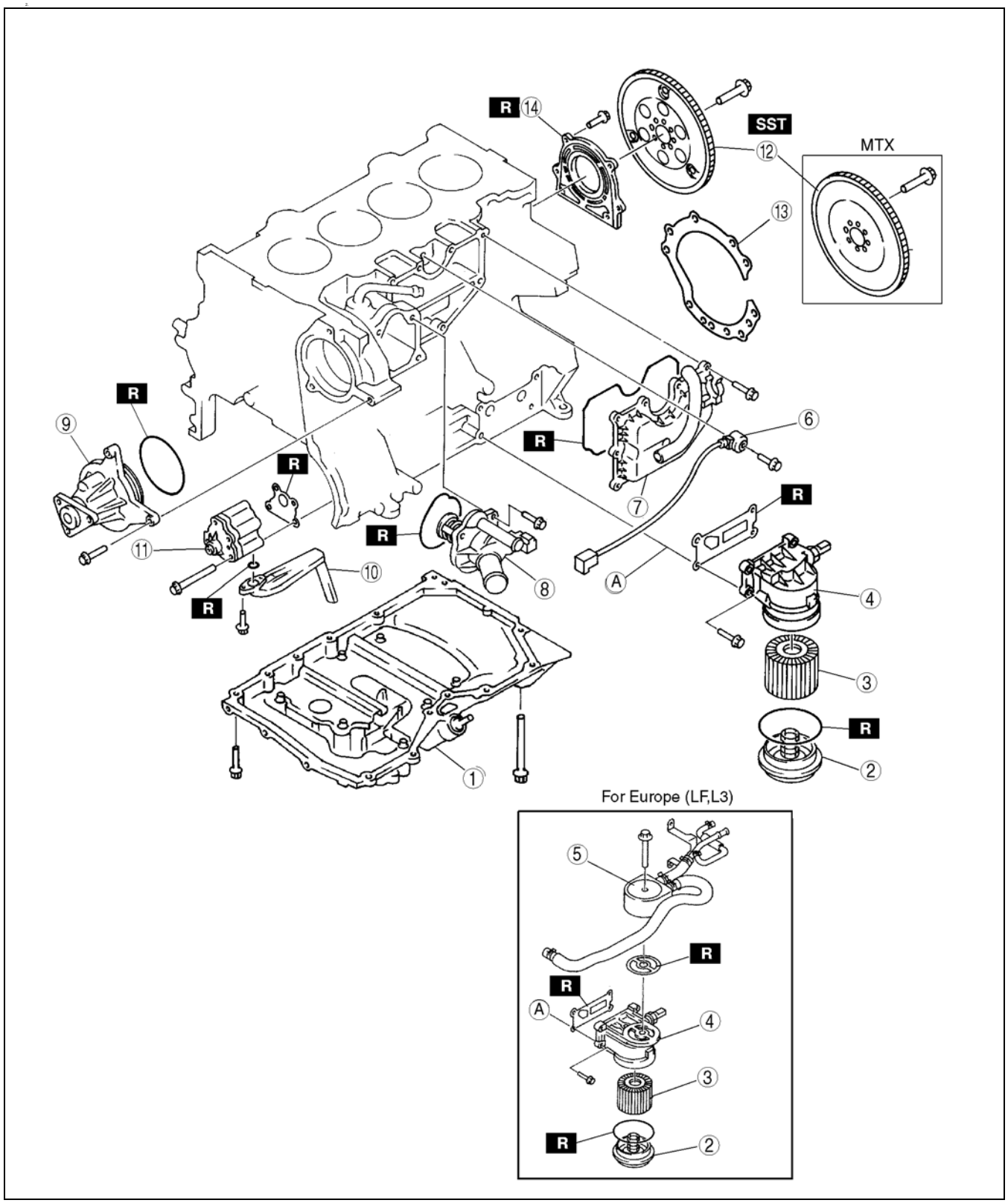

AME2224E011

1	Oil pan
2	Oil filter cover
3	Oil filter
4	Oil filter adapter
5	Oil cooler

6	Knock sensor
7	Oil separator
8	Thermostat
9	Water pump
10	Oil strainer

11	Oil pump
12	Flywheel (MTX), Drive plate (ATX) (See B–10 Drive Plate (ATX), Flywheel (MTX) Disassembly Note)
13	End plate (MTX)
14	Rear oil seal

Drive Plate (ATX), Flywheel (MTX) Disassembly Note

1. Hold the crankshaft using the SST.
2. Remove the bolts in several passes.

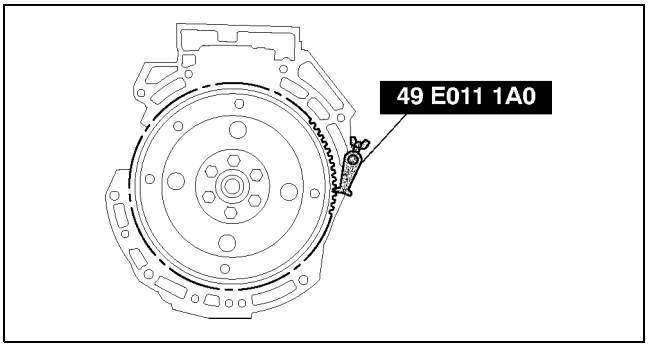

AME2224E106

CYLINDER BLOCK (II) DISASSEMBLY

A6E242402000E08

1. Disassemble in the order indicated in the table.

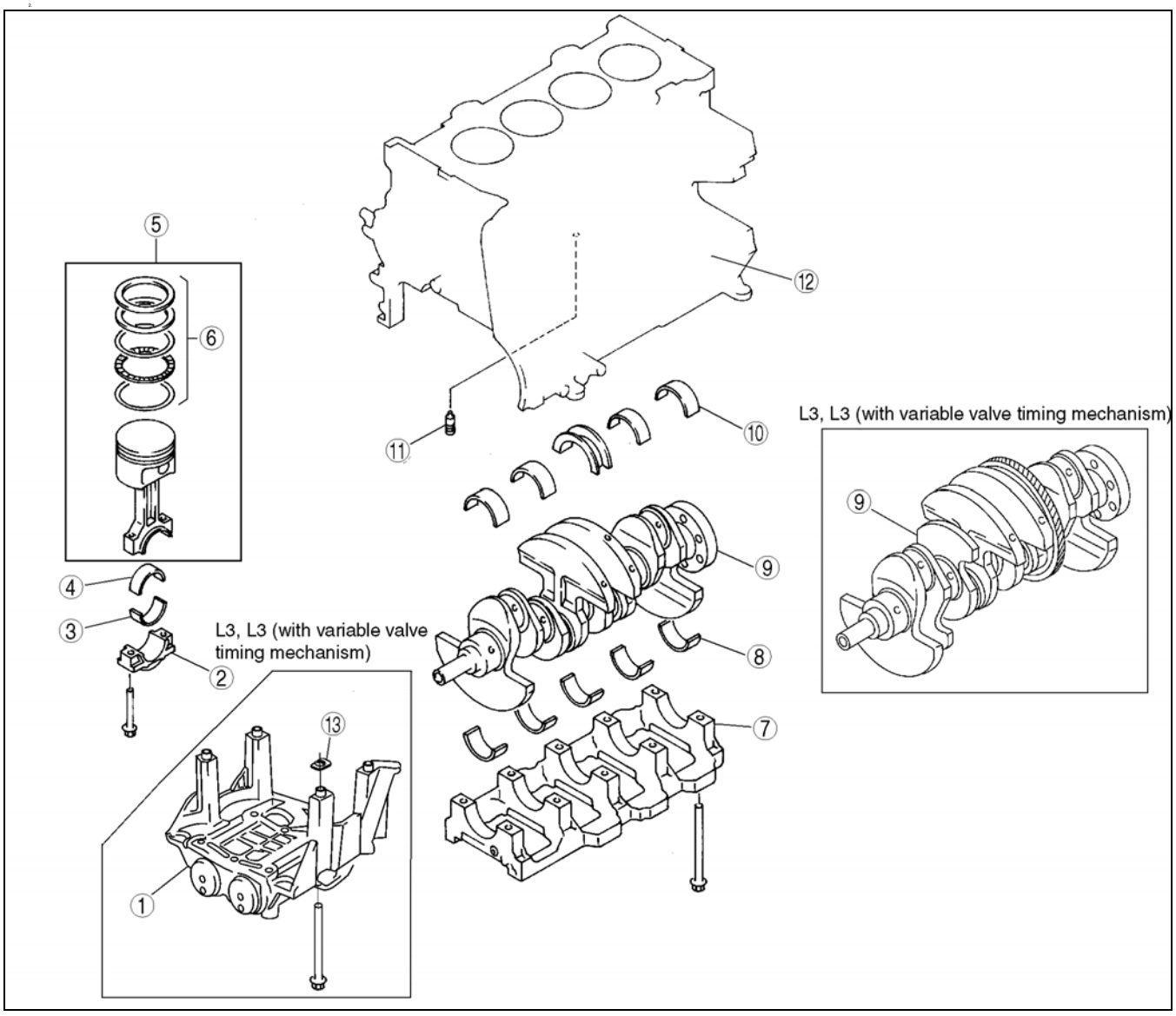

AME2224E012

1	Balancer unit (L3, L3 (with variable valve timing mechanism))
2	Connecting rod cap (See B–11 Connecting Rod Cap Disassembly Note)
3	Lower connecting rod bearing
4	Upper connecting rod bearing
5	Connecting rod, Piston assembly
6	Piston ring

7	Main bearing cap (See B–11 Main Bearing Cap Disassembly Note)
8	Lower main bearing, thrust bearing
9	Crankshaft
10	Upper main bearing, thrust bearing
11	Oil jet valve
12	Cylinder block
13	Adjustment shim

Connecting Rod Cap Disassembly Note

1. Inspect the connecting rod side clearance. (See B–22 CONNECTING ROD INSPECTION .)
2. Remove the connecting rod bolt from the connecting rod cap by tapping the bolt with a plastic hammer.

Note

- The tappets are numbered to make sure they are assembled in their original positions. When removed, keep the tappets with the cylinder head they were removed from. Do not mix the tappets.

Main Bearing Cap Disassembly Note

1. Inspect the crankshaft end play. (See B–20 CRANKSHAFT INSPECTION .)
2. Loosen the main bearing cap bolts in two or three steps in the order shown.

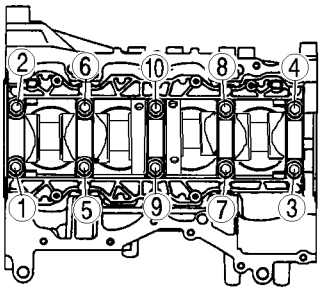

AME2224E341

CYLINDER HEAD INSPECTION

A6E242410100E01

1. Carry out color contrast penetrate examination on the cylinder head surface.
   - Replace the cylinder head if necessary.
2. Inspect for the following and repair or replace if necessary.
   (1) Sunken valve seats
   (2) Excessive camshaft oil clearance and end play
3. Measure the cylinder head for distortion in the six directions as shown.
   - If the distortion exceeds the maximum, replace the cylinder head.

   Maximum distortion:
   0.10 mm {0.004 in}

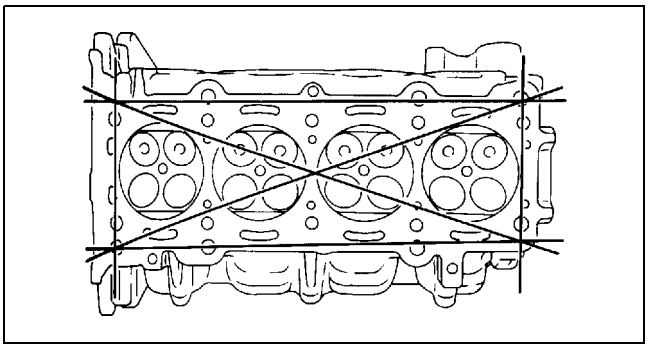

AME2224E317

4. Measure the manifold contact surface distortion as shown.
   - If the distortion exceeds the maximum, grind the surface or replace the cylinder head.

   Maximum distortion:
   0.10 mm {0.004 in}

   Maximum grinding:
   0.15 mm {0.006 in}

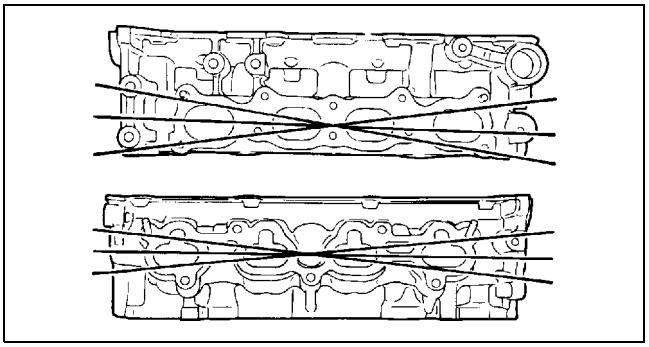

AME2224E318

VALVE, VALVE GUIDE INSPECTION

A6E242412111E01

1. Measure the valve head margin thickness of each valve.
   - If not specified, replace the valve.

   Margin thickness:
   IN: 1.62 mm {0.0637 in}
   EX: 1.82 mm {0.0716 in}

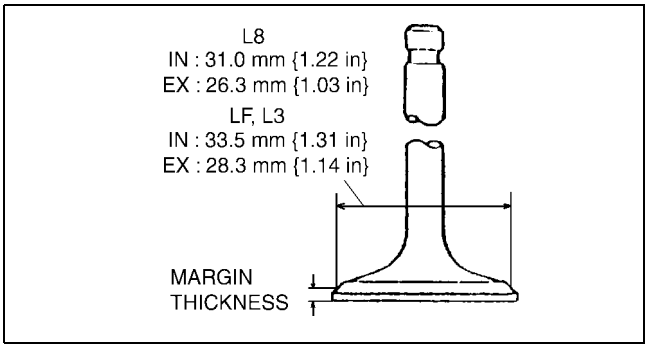

AME2224E070

2. Measure the length of each valve. Replace the valve if necessary.
   - If not specified, replace the valve.

   Standard length L:
   IN: 102.99—103.79 mm {4.055—4.086 in}
   EX: 104.25—105.05 mm {4.105—4.135 in}

   Minimum length L:
   IN: 102.99 mm {4.055 in}
   EX: 103.79 mm {4.086 in}

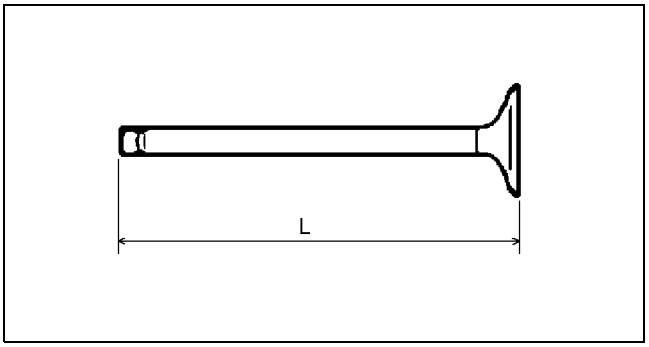

AME2224E071

3. Measure the stem diameter of each valve in X and Y directions at the three points (A, B, and C) as indicated in the figure.
   - If not as specified, replace the valve.

   Standard diameter:
   IN: 5.470—5.485 mm {0.2154—0.2159 in}
   EX: 5.465—5.480 mm {0.2152—0.2157 in}

   Maximum diameter:
   IN: 5.440 mm {0.2142 in}
   EX: 5.435 mm {0.2140 in}

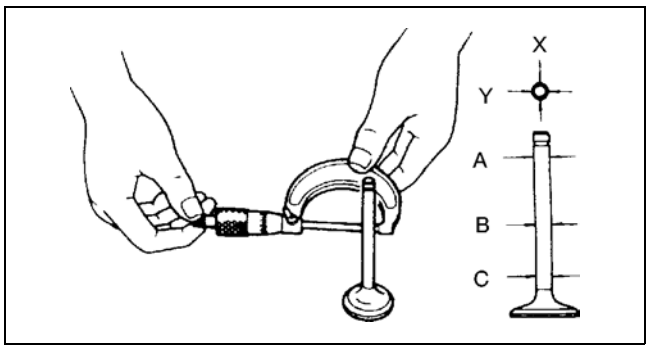

AME2224E313

4. Measure the inner diameter of each valve guide in X and Y directions at the three points (A, B, and C) as indicated in the figure.
   - If not as specified, replace the valve guide.

   Standard Inner diameter:
   IN: 5.509—5.539 mm {0.2169—0.2180 in}
   EX: 5.509—5.539 mm {0.2169—0.2180 in}

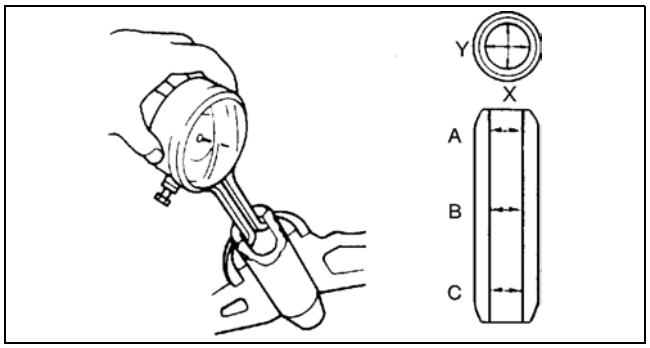

AME2224E314

5. Calculate the valve stem to guide clearance by subtracting the outer diameter of the valve stem from the inner diameter of the corresponding valve guide.
   - If not as specified, replace the valve and/or the valve guide.

   Standard clearance:
   IN: 0.024—0.069 mm {0.0009—0.0027 in}
   EX: 0.029—0.074 mm {0.0012—0.0029 in}

   Maximum clearance:
   0.10 mm {0.004 in}

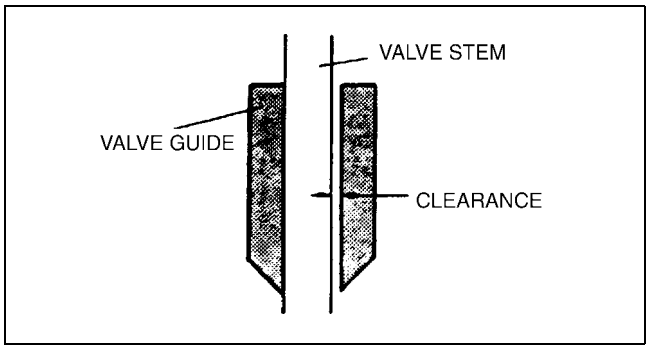

AME2224E315

6. Measure the protrusion height (dimension A) of each valve guide without lower valve spring seat.
   - If not as specified, replace the valve guide.

   Standard diameter:
   IN: 12.2—12.8 mm {0.481—0.503 in}
   EX: 12.2—12.8 mm {0.481—0.503 in}

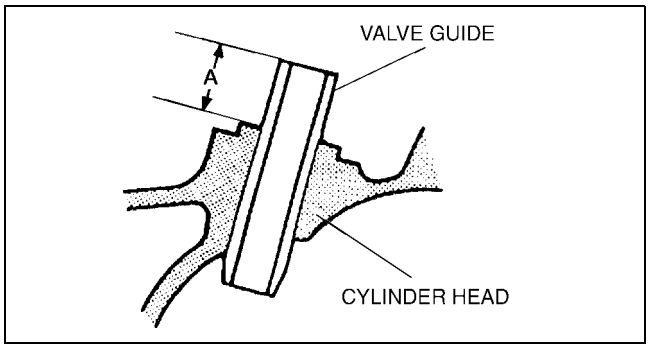

AME2224E073

VALVE GUIDE REPLACEMENT

A6E242412111E04

Valve Guide Removal

1. Remove the valve guide from the combustion chamber side using the **SST**.

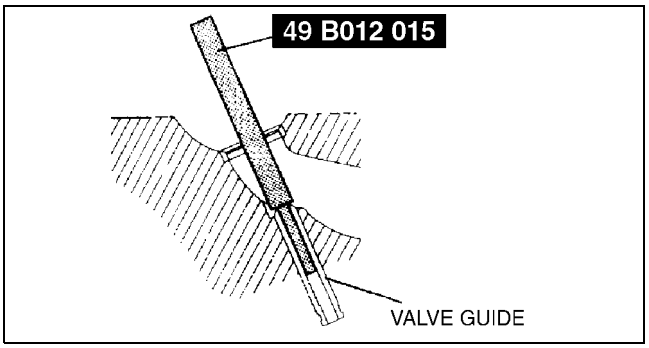

AME2224E312

Valve Guide Installation

1. Assemble the SSTs so that depth L is as specified.

   Depth L:
   IN: 12.2—12.8 mm {0.481—0.501 in}
   EX: 12.2—12.8 mm {0.481—0.501 in}

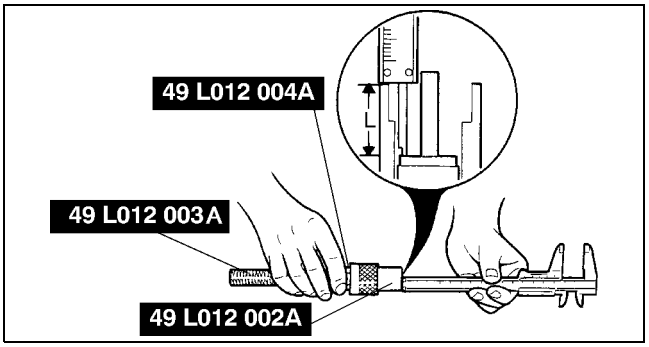

AME2224E107

2. Tap the valve guide in from the side opposite the camshaft side until the **SSTs** contacts the cylinder head.

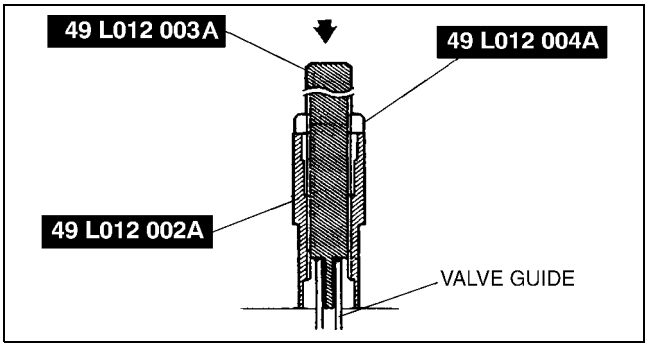

AME2224E018

3. Verify that the valve guide projection height (dimension A) is within the specification.

   Standard height:
   IN: 12.2—12.8 mm {0.481—0.501 in}
   EX: 12.2—12.8 mm {0.481—0.501 in}

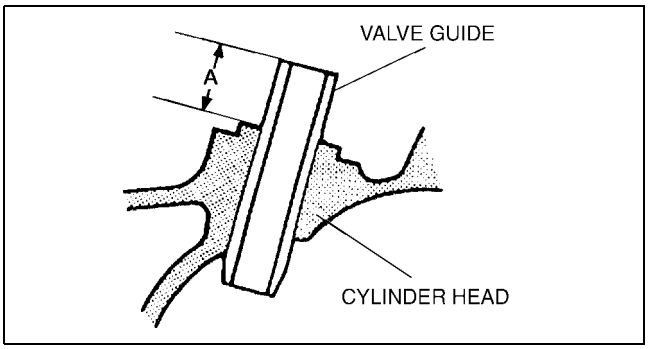

AME2224E073

VALVE SEAT INSPECTION/REPAIR

A6E242410102E01

1. Measure the seat contact width.
   - If necessary, resurface the valve seat using a 45° valve seat cutter and/or resurface the valve face.

   Standard width:
   1.2—1.6 mm {0.048—0.062 in}

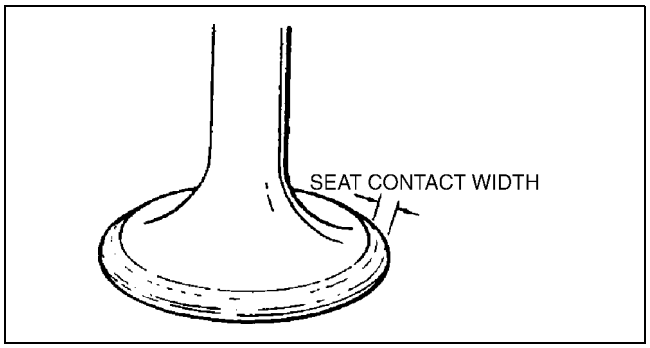

AME2224E316

2. Verify that the valve seating position is at the center of the valve face.

   (1) If the seating position is too out side, correct the valve seat using a **70°** (IN) or **65°** (EX) cutter, and a **45°** cutter.
   (2) If the seating position is too inner side, correct the valve seat using a **30°** (IN) cutter, and a **0°** (EX) cutter, and a **45°** cutter.

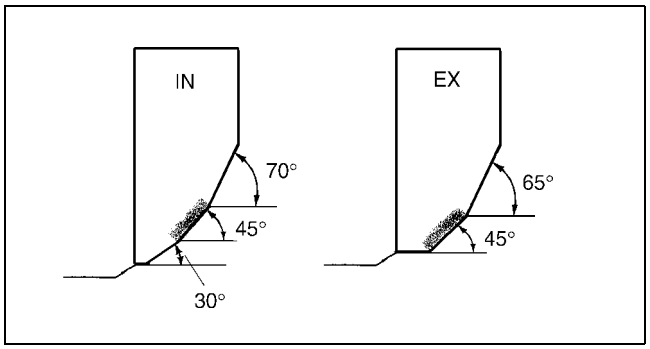

AME2224E020

3. Inspect the sinking of the valve seat. Measure the protruding length (dimension L) of the valve stem.
   - If not specified, replace the cylinder head.

   Standard dimension L:
   IN: 40.64—42.24 mm {1.600—1.662 in}

   EX: 40.50—42.10 mm {1.595—1.657 in}

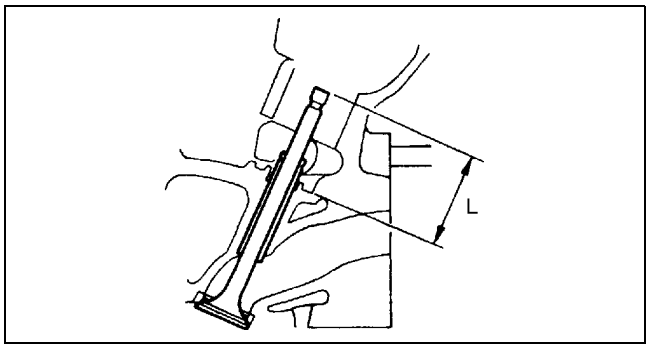

AME2224E079

VALVE SPRING INSPECTION

A6E242412125E01

1. Apply pressing force to the pressure spring and inspect the spring height.
   - If not as specified, replace the valve spring.

   Pressing force:
   494.9 N {50.47 kgf, 111.2 lbf}
   Standard height:
   27.80 mm {1.094 in}

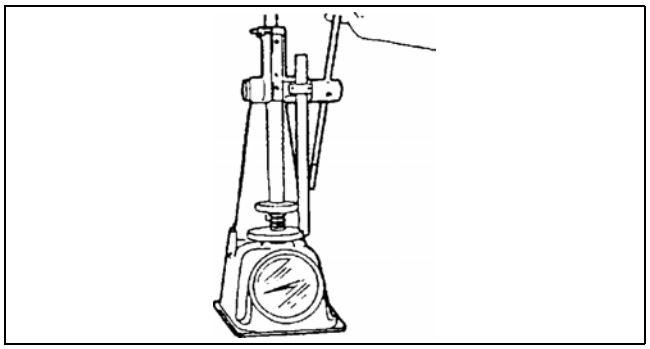

AME2224E308

2. Measure the out-of-square of the valve spring, using a square, as shown.
   (1) Rotate the valve spring one full turn and measure "A" at the point where the gap is the largest.
      - If not as specified, replace the valve spring.

Valve spring maximum out-of-square:
1% (2.10 mm {0.0826 in})

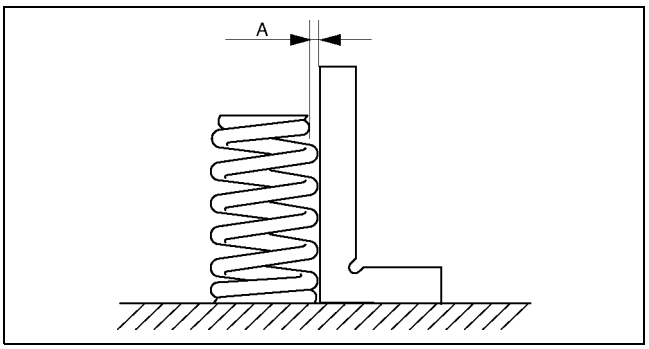

AME2224E309

CAMSHAFT INSPECTION

A6E242412420E01

1. Set the No.1 and No.5 journals on V-blocks.
2. Measure the camshaft runout.
   - If not as specified, replace the camshaft.

Maximum runout:
0.03 mm {0.0012 in}

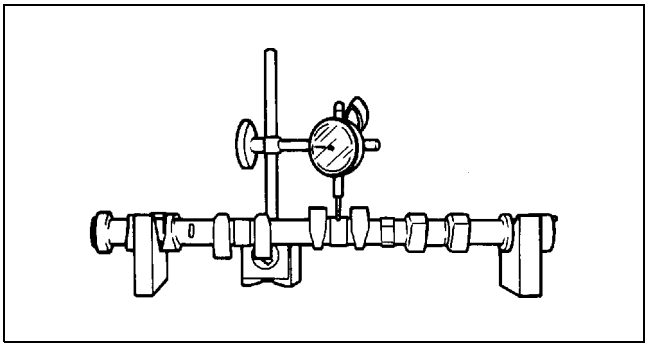
AME2224E082

3. Measure the cam lobe height at the two points as shown.
   - If not as specified, replace the camshaft.

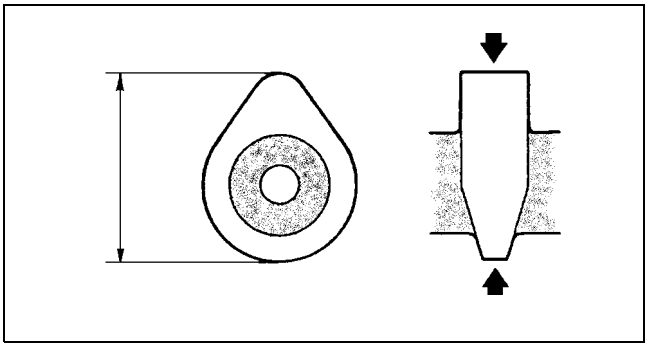
AME2224E343

Standard height (mm) {in}

Camshaft	L8	LF, L3	L3 (with variable valve timing mechanism)
INT	40.79 {1.606}	42.12 {1.659}	42.44 {1.671}
EXH	41.08 {1.618}	41.08 {1.618}	41.18 {1.622}

Minimum height (mm) {in}

Camshaft	L8	LF, L3	L3 (with variable valve timing mechanism)
INT	40.692 {1.603}	42.022 {1.655}	42.342 {1.667}
EXH	40.982 {1.614}	40.982 {1.614}	41.082 {1.618}

4. Measure the journal diameters in X and Y directions at the two points (A and B) as indicated in the figure.
   - If not as specified, replace the camshaft.

   Standard diameter:
   24.96—24.98 mm {0.9827—0.9834 in}

   Minimum diameter:
   24.95 mm {0.982 in}

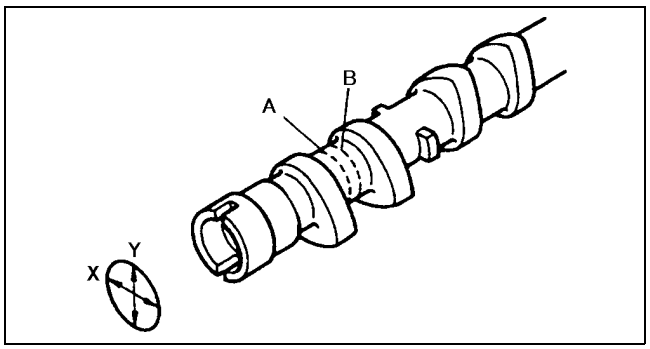

AME2224E344

5. Remove the tappet.
6. Position plasticgage atop the journals in the axial direction.
7. IInstall the camshaft cap. (See B–40 Camshaft Assembly Note.)
8. Remove the camshaft cap. (See B–6 Camshaft Cap Disassembly Note.)
9. Measure the oil clearance.
   - If not as specified, replace the cylinder head.

   Standard clearance:
   0.04—0.08 mm {0.002—0.003 in}

   Maximum clearance:
   0.09 mm {0.0035 in}

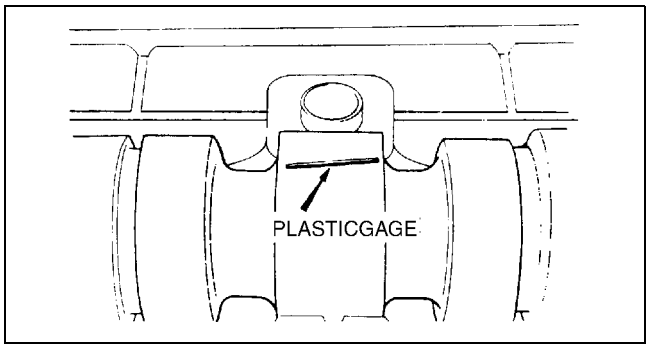

AME2224E307

10. Install the camshaft cap. (See B–40 Camshaft Assembly Note)

11. Measure the camshaft end play.
    - If not as specified, replace the cylinder head or camshaft.

    Standard end play:
    0.09—0.24 mm {0.0035—0.0094 in}

    Maximum end play:
    0.25 mm {0.0099 in}

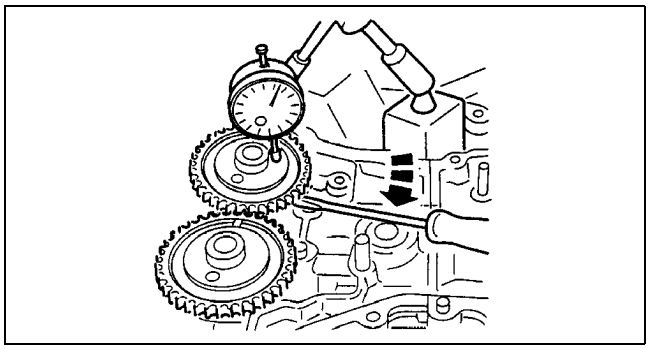
AME2224E025

12. Remove the camshaft cap. (See B–6 Camshaft Cap Disassembly Note.)

TAPPET INSPECTION

1. Measure the tappet hole inner diameter in X and Y directions at the two points (A and B) shown.

   Inner diameter:
   31.000—31.030 mm {1.2205—1.2216 in}

A6E242412310E01

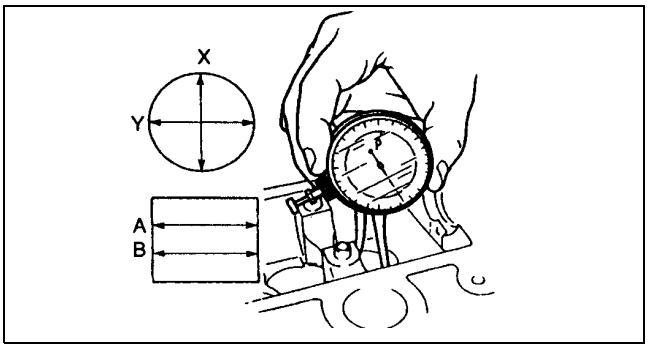

AME2224E319

2. Measure the tappet body outer diameter in X and Y directions at the two points (A and B) shown.

   Outer diameter:
   30.970—30.980 mm {1.2193—1.2196 in}

3. Subtract the tappet body outer diameter from the tappet hole inner diameter.
   - If not as specified, replace the tappet or cylinder head.

   Clearance
   Standard:
   0.02—0.06 mm {0.0008—0.0023 in}

   Maximum:
   0.15 mm {0.006 in}

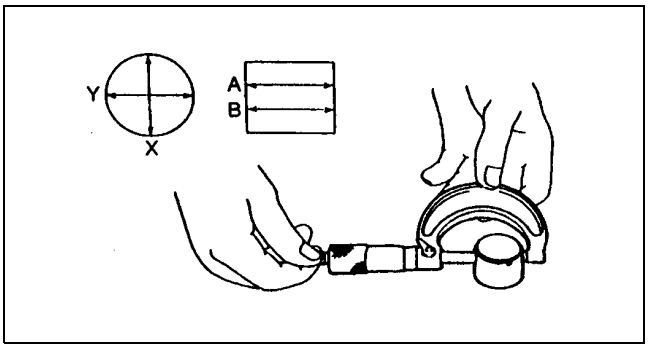

AME2224E320

CYLINDER BLOCK INSPECTION

1. Measure the distortion of the cylinder block top surface in the six directions as indicated in the figure.
   - If the distortion exceeds the maximum, replace the cylinder block.

   Maximum cylinder block distortion:
   0.10 mm {0.004 in}

A6E242410300E01

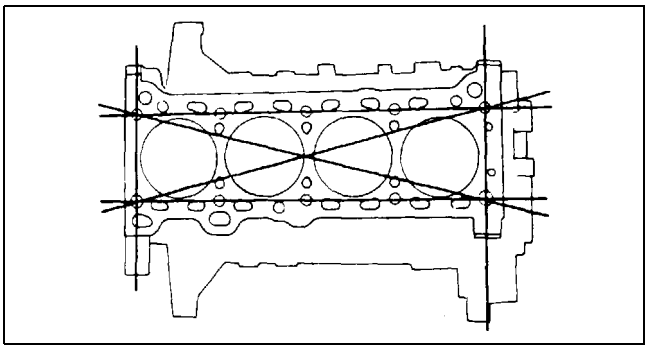

AME2224E089

2. Measure the cylinder bores in X and Y directions at 42 mm {1.65 in} below the top surface.
   - If the cylinder bore exceeds the wear limit, replace the cylinder block.

   Standard diameter limit
   L8:
   83.000—83.030 mm {3.2677—3.2689 in}
   LF, L3, L3 (with variable valve timing mechanism):
   87.500—87.530 mm {3.4449—3.4460 in}
   Minimum / maximum bore diameter limit
   L8:
   82.940—83.090 mm {3.2653—3.2712 in}
   LF, L3, L3 (with variable valve timing mechanism):
   87.440—87.590 mm {3.4425—3.4484 in}

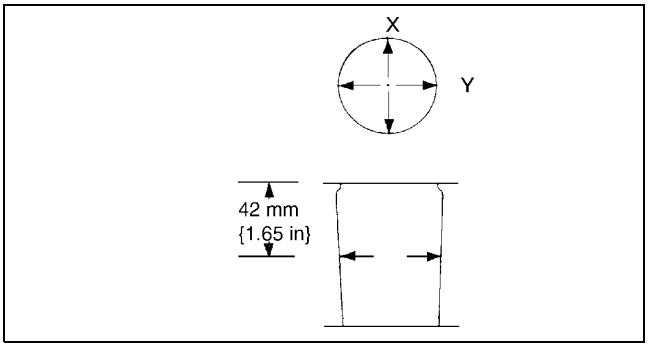

AME2224E090

OIL JET VALVE INSPECTION

A6E242410730E02

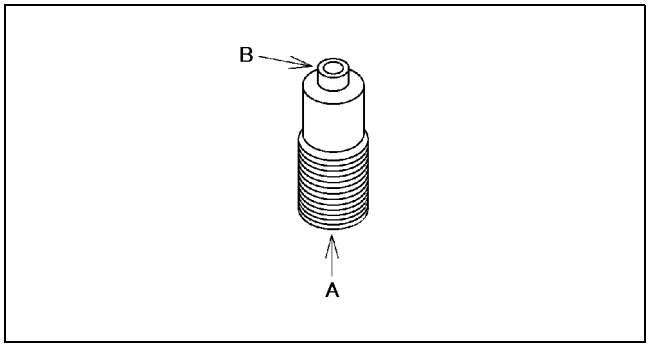

AME2224E105

1. Apply compressed air to oil jet valve A and verify that air passes through oil jet valve B.
   - If not ventilation,replace the oil jet valve.

   Air pressure:
   216—274 kPa {2.2—2.7kgf•cm^2 31.4—39.7 psi}

PISTON INSPECTION

A6E242411010E01

Caution
- **The piston, piston ring and connecting rod cannot be disassembled.**
- **When replacing the piston, piston pin, piston ring and connecting rod, replace them together as a single unit.**

1. Measure the outer diameter of each piston at right angle 90° to the piston pin, 10.0 mm {0.40 in} above the under of the piston.
   - If the piston diameter is below the standard diameter, replace the piston, piston pin, piston ring and connecting rod as a single unit.

   Piston diameter
   L8:
   82.965—82.995 mm {3.2664—3.2675 in}
   LF, L3, L3 (with variable valve timing mechanism):
   87.465—87.495 mm {3.4435—3.4446 in}

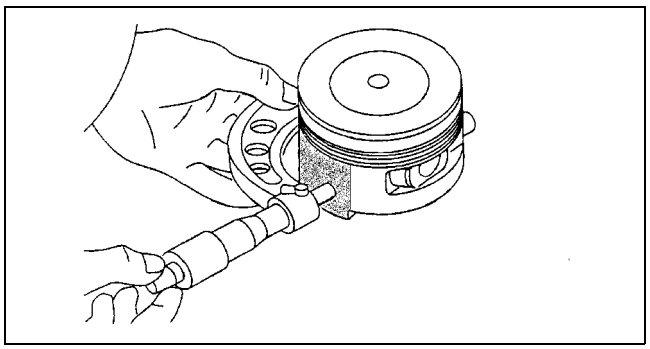

AME2224E030

2. Measure the piston-to-cylinder clearance.
   - If not as specified, replace the piston, piston pin, piston ring and connecting rod as a single unit.

   Standard clearance:
   0.025—0.045 mm {0.0010—0.0017 in}

   Maximum clearance:
   0.11 mm {0.0043 in}

3. Measure the piston ring-to-ring groove clearance around the entire circumference.
   - If the piston ring-to-ring groove clearance exceeds the maximum clearance, replace the piston, piston pin, piston ring and connecting rod as a single unit.

   Standard clearance:
   Top: 0.03—0.08 mm {0.0012—0.0031 in}
   Second: 0.03—0.07 mm {0.0012—0.0027in}
   Oil: 0.03—0.07 mm {0.0012—0.0027 in}

   Maximum clearance:
   Top: 0.17 mm {0.0067 in}
   Second, Oil: 0.15 mm {0.0059 in}

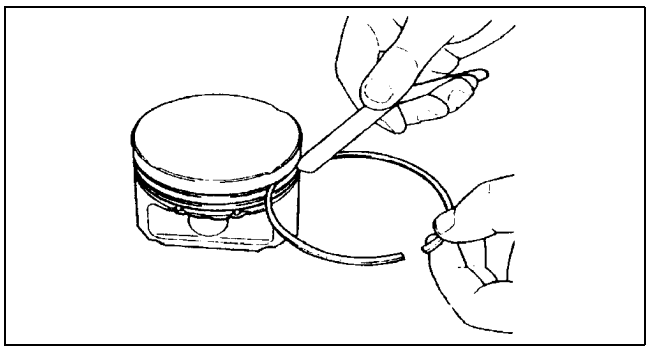

AME2224E029

4. Insert the piston ring into the cylinder by hand and use the piston to push it to the bottom of the ring travel.
5. Measure each piston ring end gap with a feeler gauge.
   - If the piston ring end gap exceeds the maximum end gap, replace the piston, piston pin, piston ring and connecting rod as a single unit.

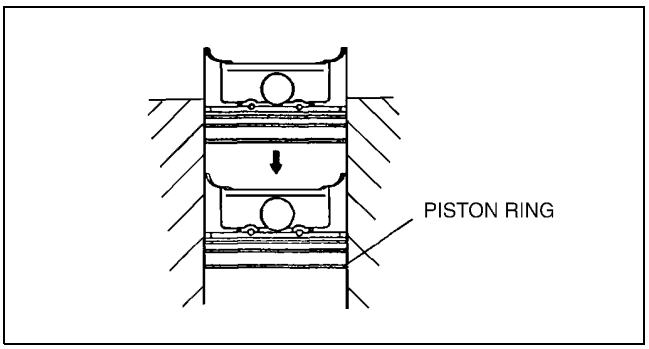

AME2224E104

Standard end gap:
Top: 0.16—0.31 mm {0.0063—0.012 in}
Second: 0.33—0.48 mm {0.0130—0.0189 in}
Oil (rail): 0.20—0.70 mm {0.0079—0.0275 in}

Maximum end gap:
1.0 mm {0.0393 in}

CRANKSHAFT INSPECTION

A6E242411301E01

1. Install the main bearing cap. (See B–30 Main Bearing Caps Assembly Note.)
2. Measure the crankshaft end play.
   - If not as specified, replace the thrust bearing or crankshaft so that the specified end play is obtained.

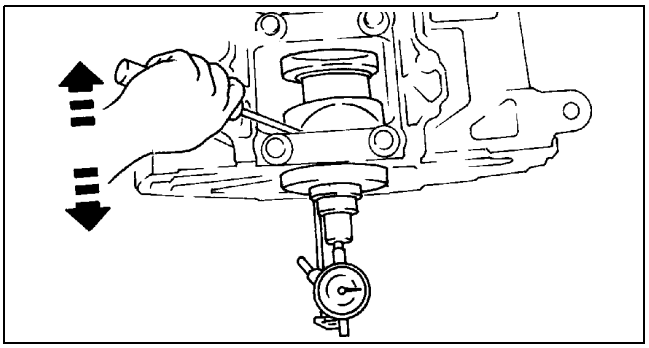
AME2224E034

Standard end play:
0.22—0.45 mm {0.0087—0.0177 in}

Maximum end play:
0.55 mm {0.022 in}

3. Remove the main bearing cap. (See B–11 Main Bearing Cap Disassembly Note.)
4. Measure the crankshaft runout.
   - If the crankshaft runout exceeds the maximum runout, replace the crankshaft.

Maximum runout:
0.05 mm {0.0019 in}

L8, LF

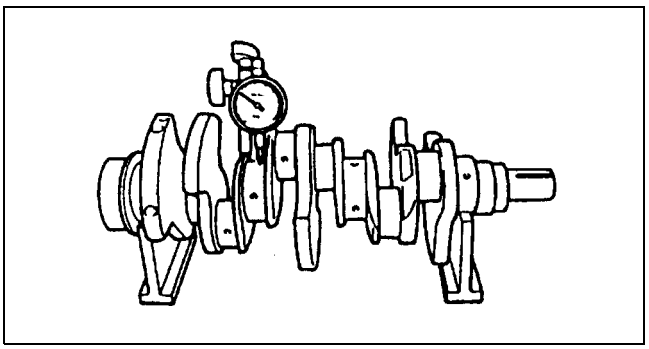
AME2224E035

L3, L3 (with variable valve timing mechanism)

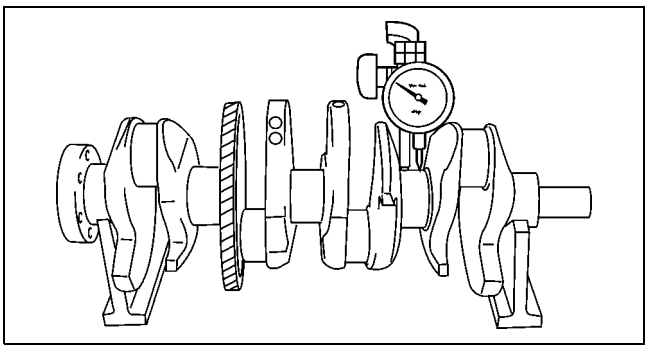
AME2224E311

5. Measure the journal diameter in X and Y directions at the two points (A and B) as indicated in the figure.
   - If not as specified, replace the crankshaft or grind the journal and install the undersize bearing.

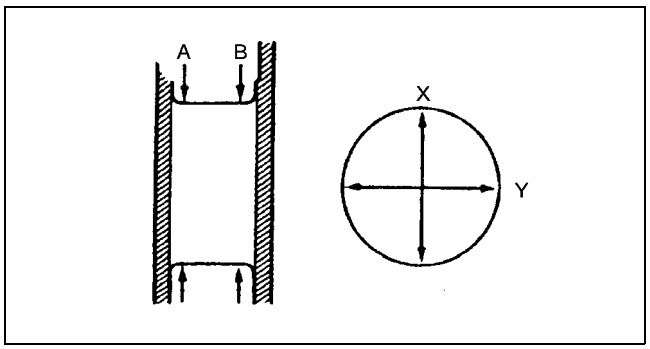

AME2224E036

Main journal

mm {in}

Bearing size	Standard diameter
Standard	51.980—52.000 {2.0464—2.0472}
0.25 {0.01} undersize	51.730—51.750 {2.0366—2.0373}

Maximum out-of-round:
0.05 mm {0.0019 in}

Crank pin

mm {in}

Bearing size	Standard diameter
Standard	49.980—50.000 {1.9677—1.9685}
0.25 {0.01} undersize	49.730—49.750 {1.9579—1.9586}

Maximum out-of-round:
0.05 mm {0.0019 in}

6. Install the main bearing caps and crankshaft.
7. Position a plastigage atop the journals in the axial direction.
8. Install the main bearing caps and cylinder block. (See B–30 Main Bearing Caps Assembly Note.)
9. Remove the main bearing caps. (See B–11 Main Bearing Cap Disassembly Note.)
10. Measure the main journal oil clearance.
    - If the clearance exceeds the maximum, replace the main bearing using the main bearing selection table or grind the main journal and install the oversize bearings so that the specified oil clearance is obtained.

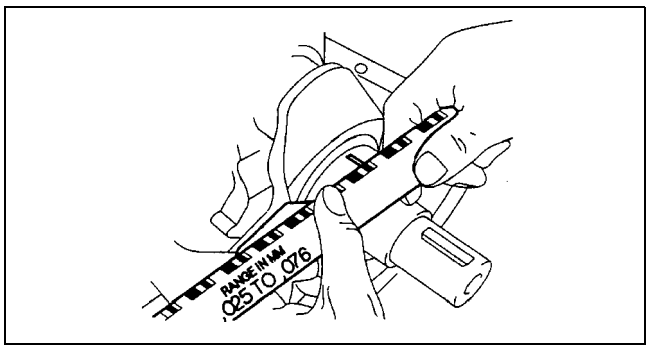

AME2224E038

Standard clearance:
0.019—0.035 mm {0.0007—0.0013 in}

Maximum clearance:
0.10 mm {0.0039 in}

mm {in}

Bearing size	Color	Bearing thickness
Standard	Green	2.506—2.509 {0.0987—0.0988}
0.25 {0.01} oversize		2.628—2.634 {0.1034—0.1037}
0.50 {0.02} oversize		2.753—2.759 {0.1084—0.1086}

CONNECTING ROD INSPECTION

A6E242411211E01

Caution
- **The piston, piston ring and connecting rod cannot be disassembled.**
- **When replacing the piston, piston pin, piston ring and connecting rod, replace them together as a single unit.**

1. Install the connecting rod cap. (See B–31 Connecting Rod Cap Assembly Note.)
2. Measure the connecting rod large end side clearance.
   - If the connecting rod large end side clearance exceeds the maximum clearance, replace the piston, piston pin, piston ring and connecting rod as a single unit.

   Standard clearance:
   0.14—0.36 mm {0.0056—0.0141 in}

   Maximum clearance:
   0.435 mm {0.0172 in}

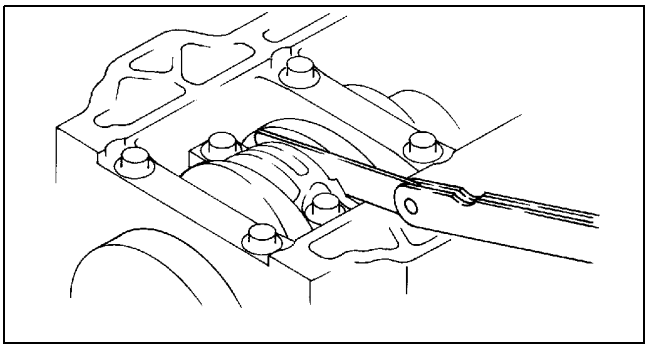

AME2224E059

3. Remove the connecting rod cap.
4. Position plastigage atop the journals in the axial direction.
5. Install the connecting rod bearing and connecting rod cap. (See B–31 Connecting Rod Cap Assembly Note.)
6. Remove the connecting rod cap.
7. Measure the connecting rod oil clearance.
   - If not as specified, replace the connecting rod bearing or grind the crank pin and use oversize bearings so that the specified clearance is obtained.

   Standard clearance:
   0.026—0.052 mm {0.0011—0.0020 in}

   Maximum clearance:
   0.1 mm {0.0039 in}

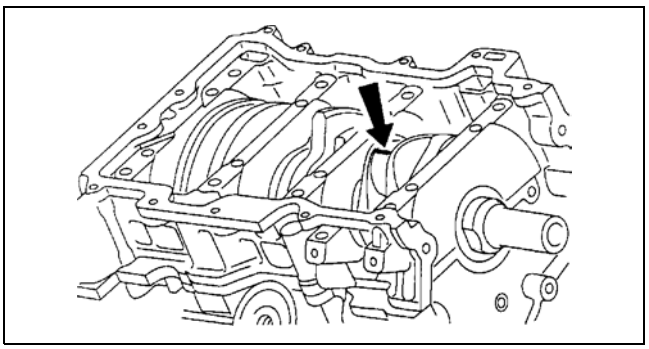

AME2224E310

mm {in}

Bearing size	Color	Bearing thickness
Standard	Green	1.496—1.502 {0.0589—0.0591}
0.50 {0.02} oversize	1.748—1.754 {0.0688—0.0690}	
0.25 {0.01} oversize	1.623—1.629 {0.0639—0.0641}	

BOLT INSPECTION

A6E242410135E01

1. Measure the length of each bolt.
   - Replace any that exceeds maximum length.

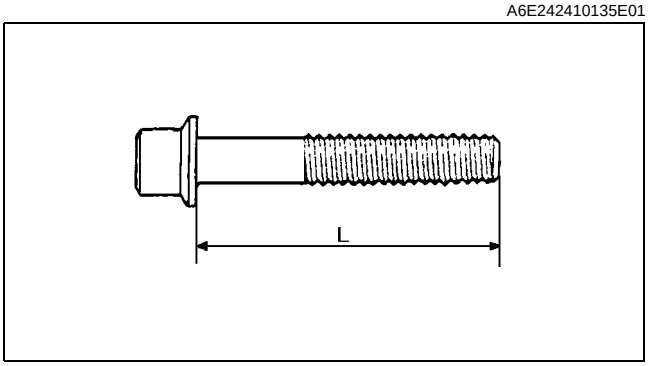

AME2224E050

Length L

bolt	Standard (mm) {in}	Maximum (mm) {in}
Cylinder head bolt	149.0—150 {5.86—5.90}	150.5 {5.92}
Connecting rod bolt	44.7—45.3 {1.75—1.78}	46.0 {1.81}
Main bearing cap bolt	110.0—110.6 {4.33—4.35}	111.3 {4.38}

VARIABLE VALVE TIMING ACTUATOR INSPECTION

A6E242400142E02

L3 (with variable valve timing mechanism)

Caution
- **Variable valve timing actuator can not be disassembled it is a precision unit /**

1. Confirm that notch of the rotor and bump of the cover at the variable valve timing actuator are aligned and fitted.
   - If the notch and the bump are not aligned, rotate the rotor toward the bulb timing retard position by hand until they are in place.
   - If the rotor and cover are not secured even though their notch and groove are aligned, replace the variable valve timing actuator.

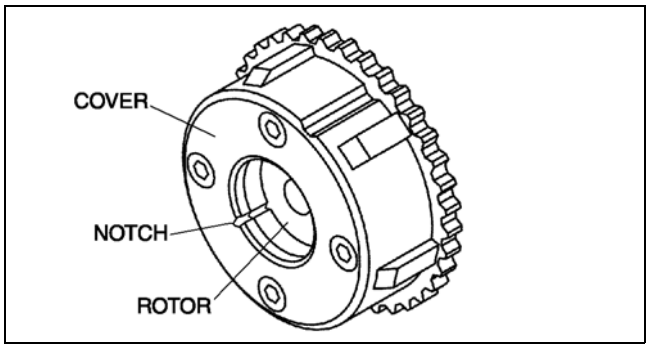

AME2224E342

OIL CONTROL VALVE (OCV) INSPECTION

A6E242414420E02

L3 (with variable valve timing mechanism)
Coil resistance inspection

1. Disconnect the negative battery cable.
2. Disconnect the oil control valve (OCV) connector.
3. Measure the resistance between terminals A and B using an ohmmeter.
   - If not as specified, replace the oil control valve (OCV).

Specification
6.9—7.9 ohms

4. Connect the oil control valve (OCV) connector.

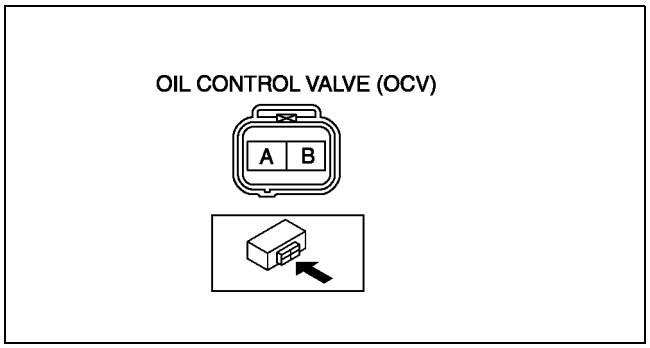

A6E2226W002

Spool valve operation inspection

1. Disconnect the negative battery cable.
2. Remove the oil control valve (OCV).
3. Verify that the spool valve in the oil control valve (OCV) is in the maximum valve timing retard position as indicated in the figure.
   - If not as specified, replace the oil control valve (OCV).
4. Verify that the battery is fully charged.
   - If not as specified, recharge the battery.

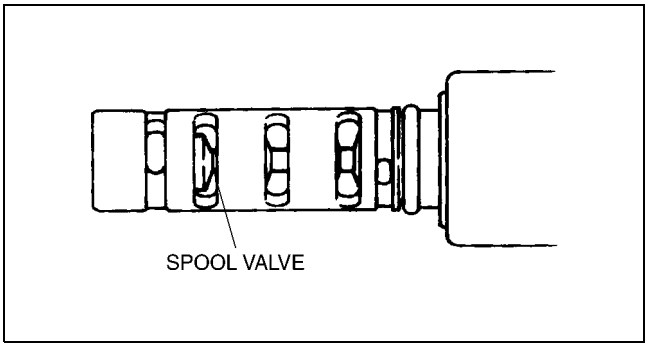

AME2226W003

5. Apply battery positive voltage between the oil control valve (OCV) terminals and verify that the spool valve operates and moves to the maximum valve timing advance position.
   - If not as specified, replace the oil control valve (OCV).

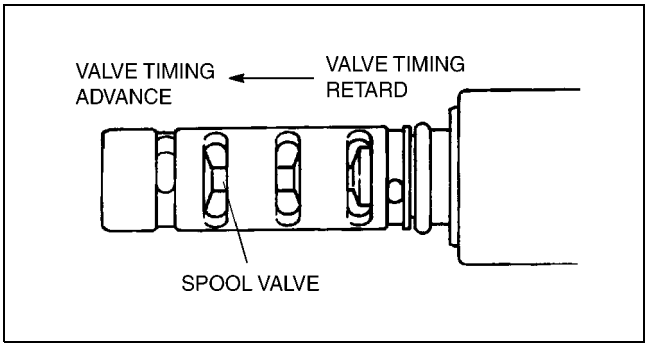

AME2226W004

Note
- When applying battery positive voltage between the oil control valve (OCV) terminals, the connection can be either of the following:
  — Positive battery cable to terminal A, negative battery cable to terminal B
  — Positive battery cable to terminal B, negative battery cable to terminal A

6. Stop applying battery positive voltage and verify that the spool valve returns to the maximum valve timing retard position.
   - If not as specified, replace the oil control valve (OCV).

VALVE CLEARANCE INSPECTION

A6E242412111E02

1. Measure the valve clearance as follows.
   (1) Turn the crankshaft clockwise so that the No.1 piston is at TDC of the compression stroke.
   (2) Measure the valve clearance at A in the figure.
      - If the valve clearance exceeds the space the tappet. (See B–25 VALVE CLEARANCE ADJUSTMENT.)

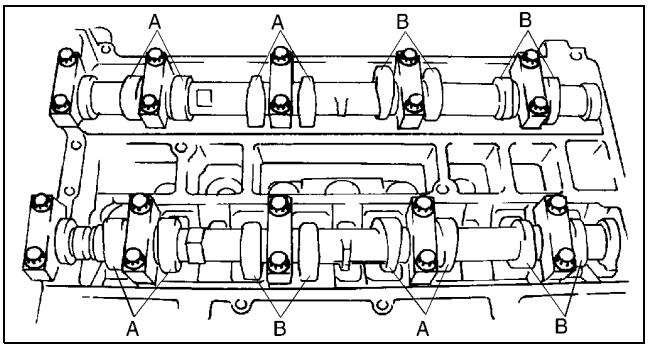

AME2212W001

Note
- Make sure to note the measured values for choosing the suitable replacement tappets.

Standard [Engine cold]
IN: 0.22—0.28 mm {0.0087—0.0110 in} (0.25±0.03 mm {0.0098±0.0011 in})
EX: 0.27—0.33 mm {0.0106—0.0130 in} (0.30±0.03 mm {0.0118±0.0011 in})

(3) Turn the crankshaft **360°** clockwise so that the No.4 piston is at TDC of the compression stroke.
(4) Measure the valve clearance at B in the figure.
   - If the valve clearance exceeds the standard, replace the tappet. (See B–25 VALVE CLEARANCE ADJUSTMENT.)

Note
- Make sure to note the measured values for choosing the suitable replacement tappets.

Standard [Engine cold]
IN: 0.22—0.28 mm {0.0087—0.0110 in} (0.25±0.03 mm {0.0098±0.0011 in})
EX: 0.27—0.33 mm {0.0106—0.0130 in} (0.30±0.03 mm {0.0118±0.0011 in})

VALVE CLEARANCE ADJUSTMENT

A6E242412111E03

1. Remove the engine front cover lower blind plug.
2. Remove the engine front cover upper blind plug.
3. Remove the cylinder block lower blind plug.

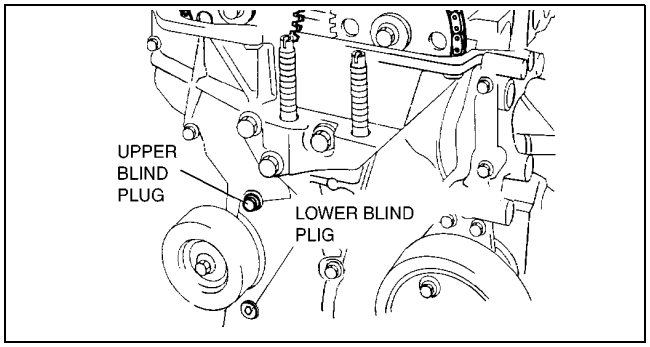

AMJ2212E004

4. Install the SST as shown.
5. Turn the crankshaft clockwise the crankshaft is in the No.1 cylinder TDC position.

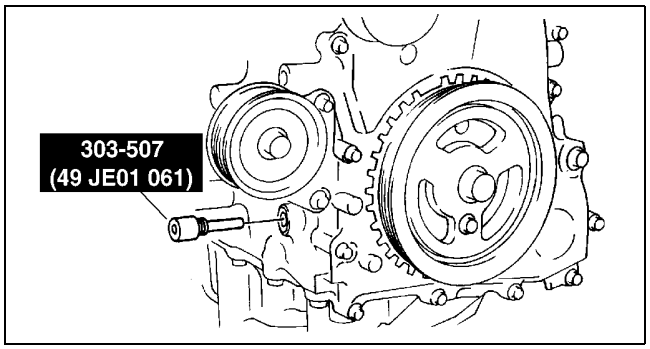

AME2212W004

6. Loosen the timing chain.
   (1) Using a suitable screwdriver or equivalent tool, unlock the chain tensioner ratchet.
   (2) Turn the exhaust camshaft clockwise using a suitable wrench on the cast hexagon and loosened the timing chain.
   (3) Placing the suitable bolt **(M6 X 1.0 Length 25—35 mm {0.9—1.3 in})** at the engine front cover upper blind plug, secure the chain guide at the position where the tension is released.

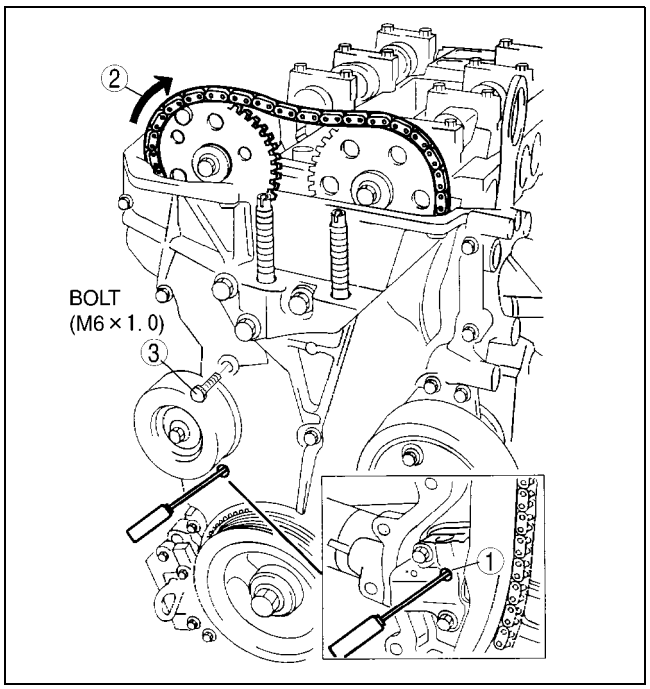

AME2212W005

7. Hold the exhaust camshaft using a suitable wrench on the cast hexagon as shown.

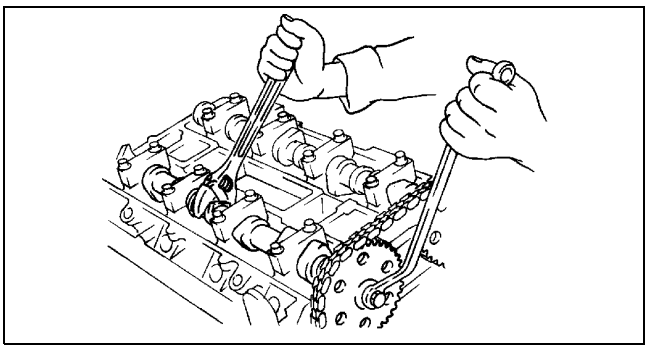

AME2212W006

8. Remove the exhaust camshaft sprocket.

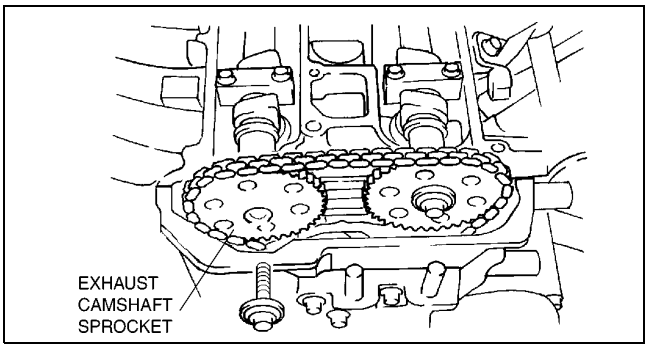

AME2212W007

9. Loosen the camshaft cap bolts in several passes in the order shown.

Note
- The cylinder head and the camshaft caps are numbered to make sure they are reassembled in their original position. When removed, keep the caps with the cylinder head they were removed from. Do not mix the caps.

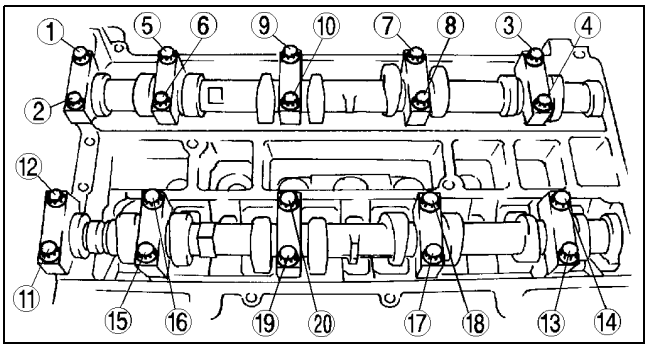

AME2212W008

10. Remove the camshaft.
11. Remove the tappet.
12. Select proper adjustment shim.

New adjustment shim
= Removed shim thickness + Measured valve clearance - Standard valve clearance (IN: 0.25 mm {0.0098 in}, EX: 0.30 mm {0.0118 in})

Standard [Engine cold]
IN: 0.22—0.28 mm {0.0087—0.0110 in} (0.25±0.03 mm {0.0098±0.0011 in})
EX: 0.27—0.33 mm {0.0106—0.0130 in} (0.30±0.03 mm {0.0118±0.0011 in})

13. Install the camshaft with No.1 cylinder aligned with the TDC position.
14. Tighten the camshaft cap bolt using the following two steps.
    (1) Tighten to **5.0—9.0 N·m {51.0—91.7 kgf·cm, 44.3—79.5 in·lbf}**.
    (2) Tighten to **14.0—17.0 N·m {1.5—1.7 kgf·m, 10.4—12.5 ft·lbf}.**

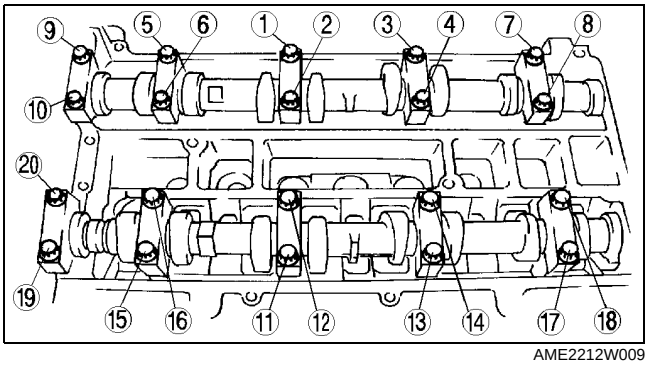

AME2212W009

15. Install the exhaust camshaft sprocket.

Note
- Do not tighten the bolt for the camshaft sprocket during this step. First confirm the valve timing, then tighten the bolt.

16. Install the **SST** to the camshaft as shown.

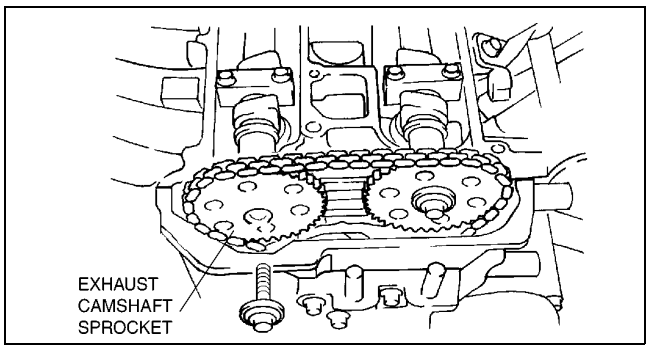

AME2212W007

Europe

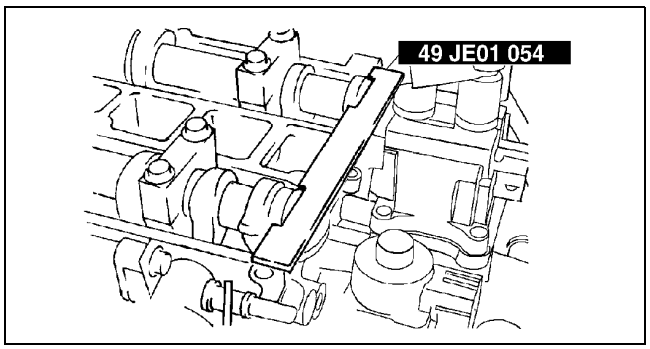

AME2212W010

Except Europe

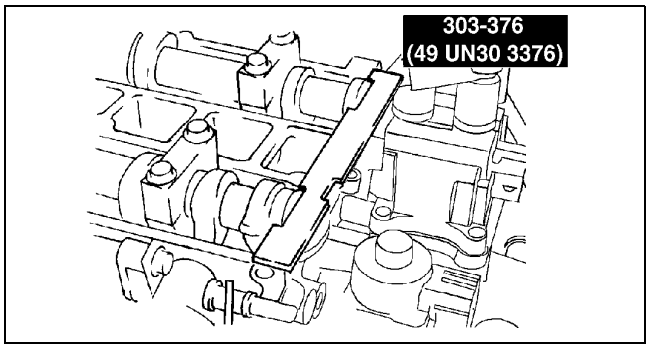

AME2212W011

17. Remove the M6 x 1.0 bolt from the engine front cover to apply tension to the timing chain.
18. Turn the crankshaft clockwise the crankshaft is in the No.1 cylinder TDC position.
19. Hold the exhaust camshaft using a suitable wrench on the cast hexagon as shown.
20. Tighten the exhaust camshaft sprocket lock bolt

Tightening torque
69—75 N·m {7.10—7.6 kgf·m, 50.9—55.3 ft·lbf}

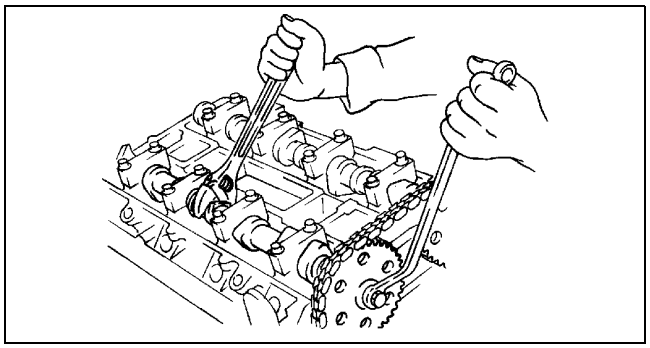
AME2212W006

21. Remove the **SST** from the camshaft.
22. Remove the **SST** from the block lower blind plug.
23. Rotate the crankshaft clockwise two turns until the TDC position.
    - If not aligned, loosen the crankshaft pulley lock bolt and repeat from Step 14.
24. Apply silicone sealant to the engine front cover upper blind plug.

25. Install the engine front cover upper blind plug.

Tightening torque:
10 N·m {1.0 kgf·m, 7.4 ft·lbf}

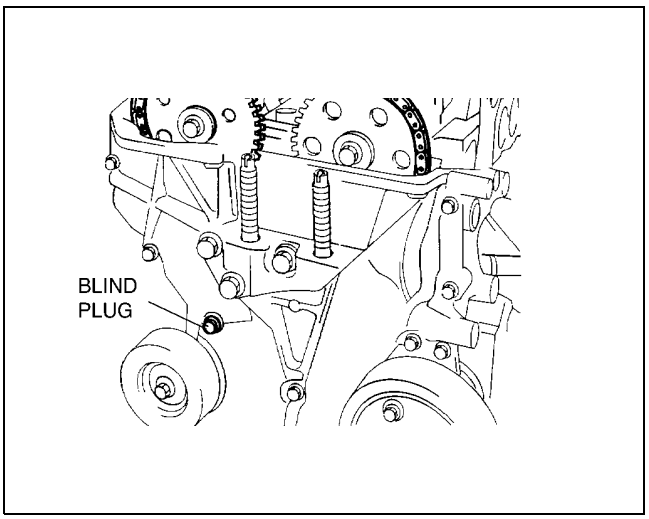

AME2212W003

26. Install the cylinder block lower blind plug.

Tightening torque:
20 N·m {2.0 kgf·m, 14.8 ft·lbf}

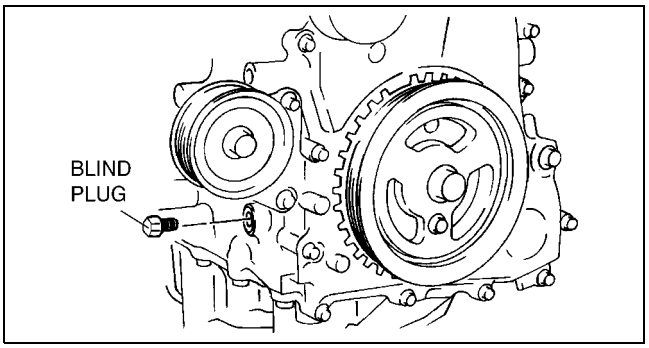

AME2212W012

27. Install the new engine front cover lower blind plug.

Tightening torque:
12 N·m {1.2 kgf·m, 8.9 ft·lbf}

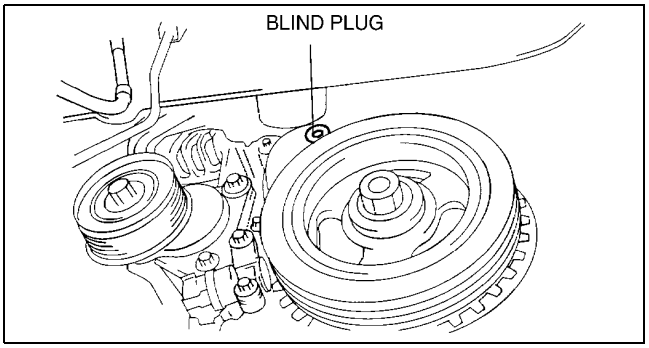

AME2212W002

CYLINDER BLOCK (I) ASSEMBLY

A6E242402000E09

1. Assemble in the order indicated in the table.

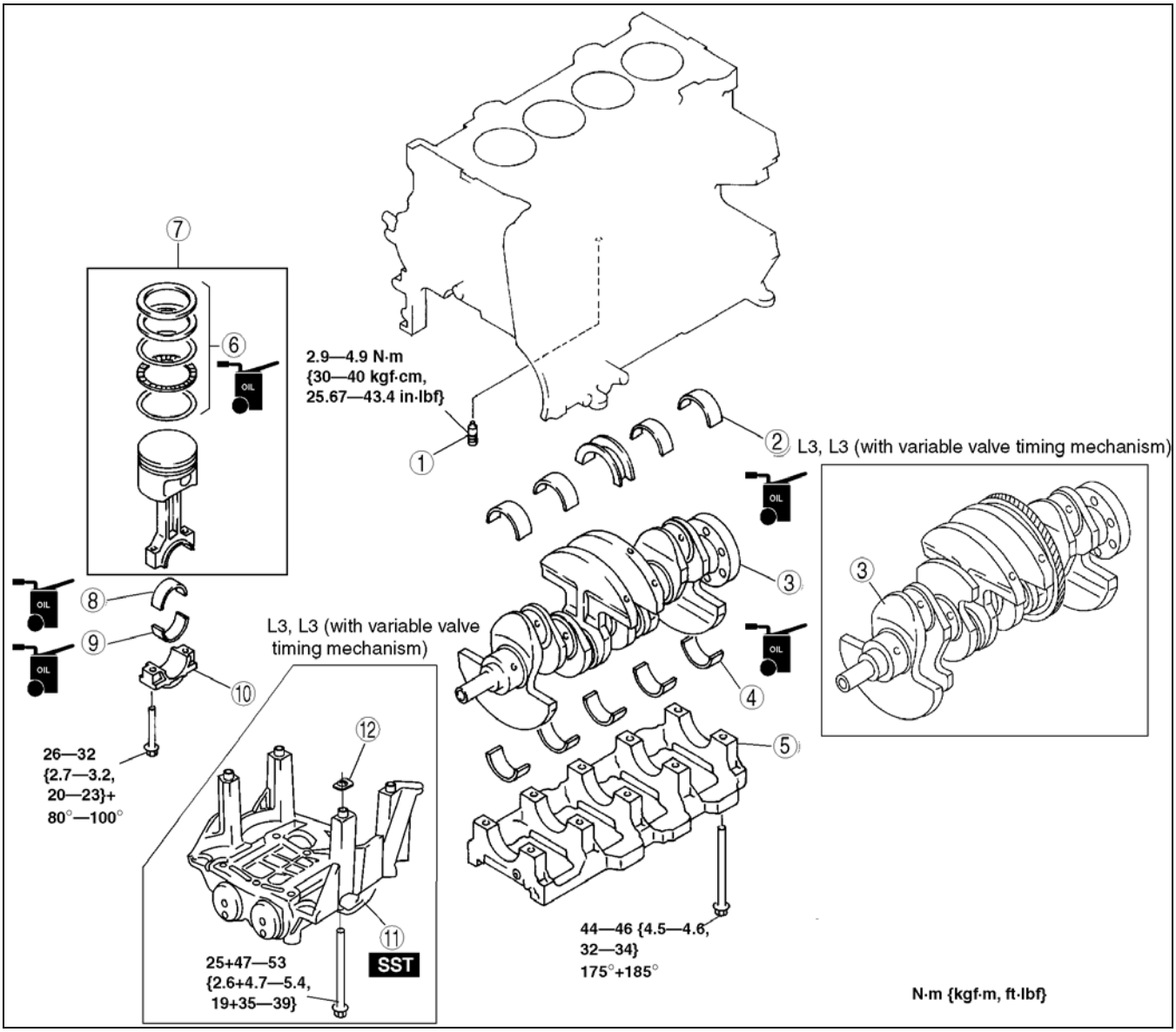

AME2224E039

1	Oil jet valve
2	Upper main bearing, thrust bearing
3	Crankshaft
4	Lower main bearing, thrust bearing
5	Main bearing cap (See B–30 Main Bearing Caps Assembly Note)
6	Piston ring (See B–30 Piston Ring Assembly Note)
7	Connecting rod, Piston assembly (See B–30 Piston Assembly Note)

8	Upper connecting rod bearing (See B–31 Connecting Rod Bearing Assembly Note)
9	Lower connecting rod bearing (See B–31 Connecting Rod Bearing Assembly Note)
10	Connecting rod cap (See B–31 Connecting Rod Cap Assembly Note)
11	Engine balancer (L3 (with variable valve timing mechanism)) (See B–31 Balancer Unit Assembly Note)
12	Adjustment shim

Main Bearing Caps Assembly Note

1. Install the main bearing caps in the order indicated in the figure.

   Tightening torque:
   (1) 44—46 N·m
   {4.5—4.6 kgf·m, 32.5—33.9 ft·lbf}
   (2) 175°—185°

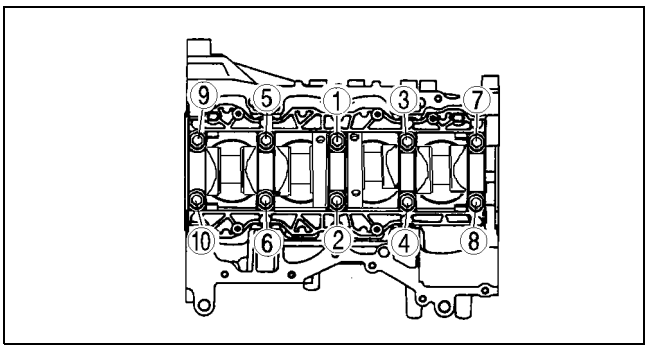

AME2224E052

Piston Ring Assembly Note

1. Install the two oil control ring segments and spacer.
2. Verify that the second ring is installed with scraper face side downward.
3. Verify that the top ring is installed with scraper face side inner of upper.

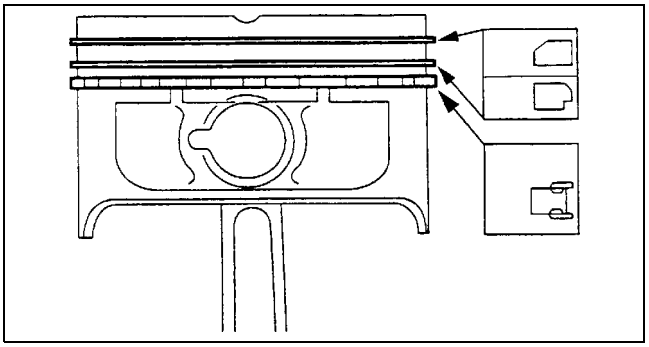

AME2224E322

Piston Assembly Note

1. Position the end gap of each ring as indicated in the figure.

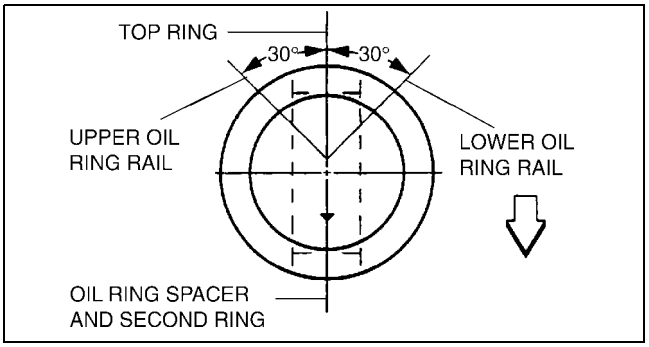

AME2224E323

2. Insert the piston and connecting rod into the cylinder with the arrow mark to front of the engine.

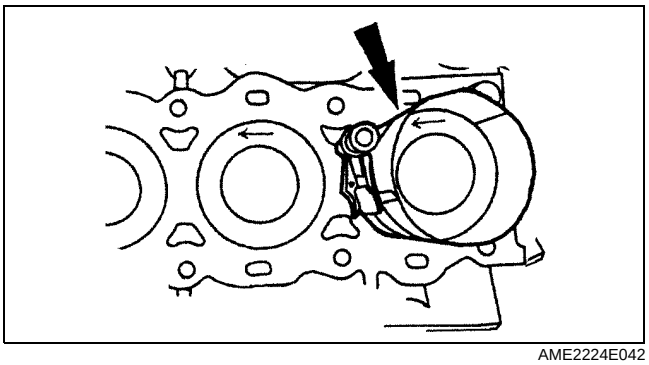

AME2224E042

Connecting Rod Bearing Assembly Note

1. Install the connecting rod bearing to the connecting rod and connecting rod caps, as shown in the figure.

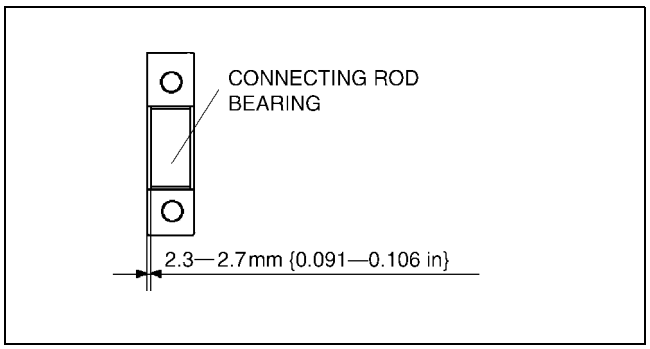

AME2224E053

Connecting Rod Cap Assembly Note

Caution
- **When assembling the connecting rod caps, align the broken, rough faces of the connecting rods and connecting rod caps.**

1. Tighten the connecting rod bolts in two steps.

Tightening torque:
(1) 26—32 N·m
{2.7—3.2 kgf·m, 19.2—23.6 ft·lbf}
(2) 80°—100°

Balancer Unit Assembly Note

1. Confirm by visual inspection that there is no damage to the balancer unit gear and verify that the shaft turns smoothly.
   - If there is any damage or malfunction, replace the balancer unit.

Caution
- **Due to the precision interior construction of the balancer unit, it cannot be disassembled.**

2. Rotate the crankshaft clockwise and align the No. 1 cylinder to the TDC.
3. Install the adjustment shim to the seat face of the balancer unit.
4. With the balancer unit marks at the exact top center, assemble the unit to the cylinder block.

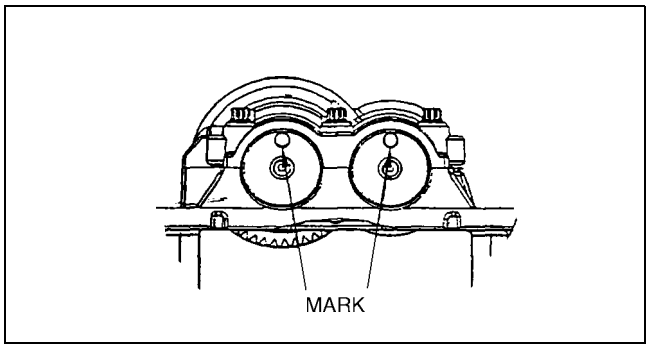

AME2224E061

5. Insert a screwdriver into the crankshaft No. 1 crankweight area and set both the rotation and the thrust direction with the screwdriver, using a prying action, as shown.

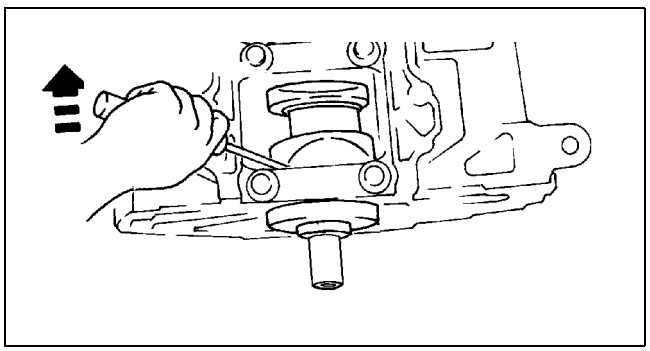

AME2224E080

6. Set the SST as shown, then measure the gear backlash using a dial gauge.
   - If the backlash exceeds the specified range, remeasure the backlash and, using the adjustment shim selection table, select the proper shim, according to the following procedure.

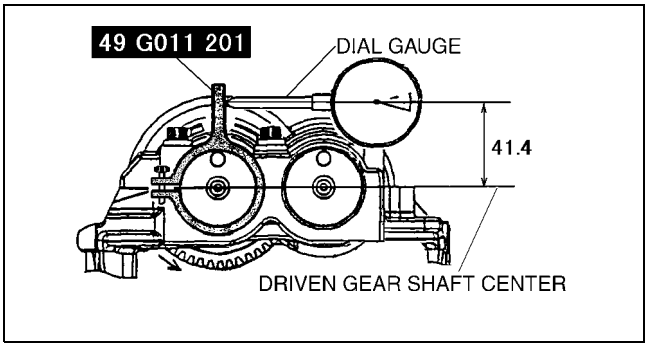

AME2224E060

Caution
- **When measuring the backlash, rotate the crankshaft one full rotation and verify that it is within the specified range at all of the following six positions: 10°, 30°, 100°, 190°, 210°, 280° ATDC.**

Value range:
0.005—0.101 mm {0.00019—0.0039 in}

(1) Using master adjustment shim (No.50), assemble the balancer unit to the cylinder block, then measure the backlash.
(2) Select the proper adjustment shim according to the measured value.
(3) Install the selected adjustment shim to the balancer unit, then assemble the balancer unit to the cylinder block.

Adjustment shim selection table

Backlash mm {in}	Selection shim (No.)	Shim thickness mm {in}	Backlash mm {in}	Selection shim (No.)	Shim thickness mm {in}
0.256—0.262 {0.0100—0.01031}	15	1.15 {0.0452}	0.116—0.122 {0.00456—0.00480}	35	1.35 {0.0531}
0.249—0.255 {0.0098—0.010039}	16	1.16 {0.0456}	0.109—0.115 {0.00429—0.00452}	36	1.36 {0.0535}
0.242—0.248 {0.0096—0.00976}	17	1.17 {0.0460}	0.102—0.108 {0.00401—0.00425}	37	1.37 {0.0539}
0.235—0.241 {0.0093—0.0948}	18	1.18 {0.0464}	0.095—0.101 {0.00374—0.00397}	38	1.38 {0.0543}
0.228—0.234 {0.00897—0.00921}	19	1.19 {0.0468}	0.088—0.094 {0.00346—0.00370}	39	1.39 {0.0547}
0.221—0.227 {0.00870—0.00893}	20	1.20 {0.0472}	0.081—0.087 {0.00318—0.00342}	40	1.40 {0.0551}
0.214—0.220 {0.00842—0.00874}	21	1.21 {0.0476}	0.074—0.080 {0.00291—0.00314}	41	1.41 {0.0555}
0.207—0.213 {0.00814—0.00838}	22	1.22 {0.0480}	0.067—0.073 {0.00263—0.00287}	42	1.42 {0.0559}
0.200—0.206 {0.00787—0.00811}	23	1.23 {0.0484}	0.060—0.066 {0.00236—0.00259}	43	1.43 {0.0562}
0.193—0.199 {0.00759—0.00783}	24	1.24 {0.0488}	0.053—0.059 {0.00208—0.00232}	44	1.44 {0.0566}
0.186—0.192 {0.00732—0.00755}	25	1.25 {0.492}	0.046—0.052 {0.00181—0.00204}	45	1.45 {0.0570}
0.179—0.185 {0.00704—0.00728}	26	1.26 {0.496}	0.039—0.045 {0.00153—0.00177}	46	1.46 {0.0574}

Backlash mm {in}	Selection shim (No.)	Shim thickness mm {in}	Backlash mm {in}	Selection shim (No.)	Shim thickness mm {in}
0.172—0.178 {0.00677—0.00700}	27	1.27 {0.499}	0.032—0.038 {0.00125—0.00149}	47	1.47 {0.0578}
0.165—0.171 {0.00649—0.00673}	28	1.28 {0.503}	0.025—0.031 {0.000984—0.00122}	48	1.48 {0.0582}
0.158—0.164 {0.00622—0.00645	29	1.29 {0.507}	0.018—0.024 {0.000708—0.000944}	49	1.49 {0.0586}
0.151—0.157 {0.00594—0.00618}	30	1.30 {0.511}	0.011—0.017 {0.000433—0.000669}	50 (master)	1.50 {0.0590}
0.144—0.150 {0.0566—0.0590}	31	1.31 {0.515}	0.004—0.010 {0.00015—0.000393}	51	1.51 {0.0594}
0.137—0.143 {0.00539—0.00562}	32	1.32 {0.519}	0.000—0.004 {0.000—0.000157}	52	1.52 {0.0598}
0.130—0.136 {0.00511—0.00535}	33	1.33 {0.523}	0.000—0.000 {0.000—0.000}	53	1.53 {0.0602}
0.123—0.129 {0.00484—0.00507}	34	1.34 {0.527}	0.000—0.000 {0.000—0.000}	54	1.54 {0.0606}

CYLINDER BLOCK (II) ASSEMBLY

A6E242402000E10

1. Assemble in the order indicated in the table.

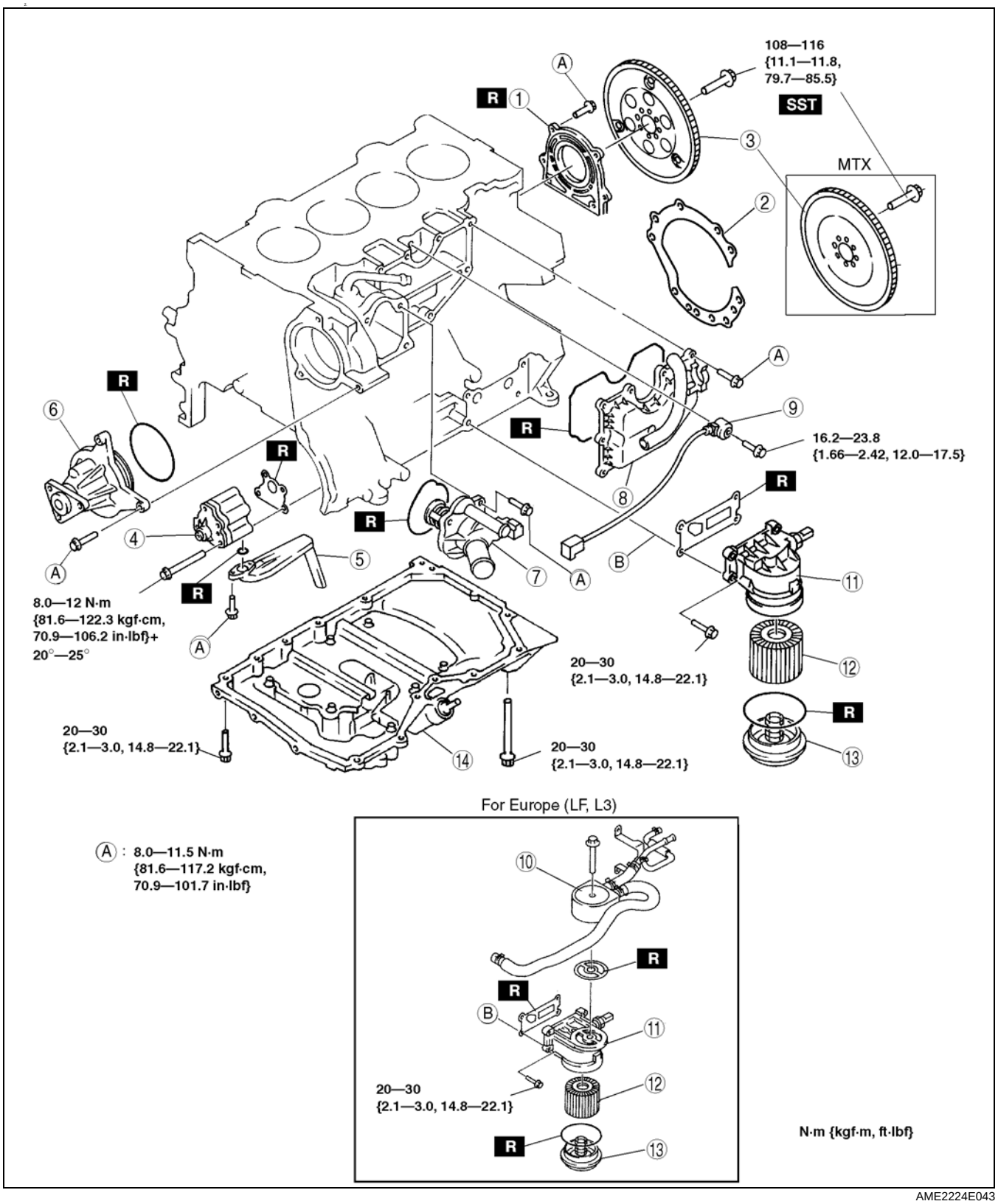

AME2224E043

1	Rear oil seal (See B–35 Rear Oil Seal Assembly Note)
2	End plate (MPV)
3	Flywheel (MTX), Drive plate (ATX) (See B–36 Drive Plate (ATX), Flywheel (MTX) Assembly Note)
4	Oil pump
5	Oil strainer
6	Water pump
7	Thermostat

8	Oil separator
9	Knock sensor
10	Oil cooler
11	Oil filter adapter
12	Oil filter
13	Oil filter cover
14	Oil pan (See B–36 Oil pan Assembly Note)
15	MTX

Rear Oil Seal Assembly Note

1. Apply silicone sealant to the mating faces as shown.

   Dot diameter:
   4.0—6.0 mm {0.16—0.23 in}

2. Apply clean engine oil to the new oil seal lip.

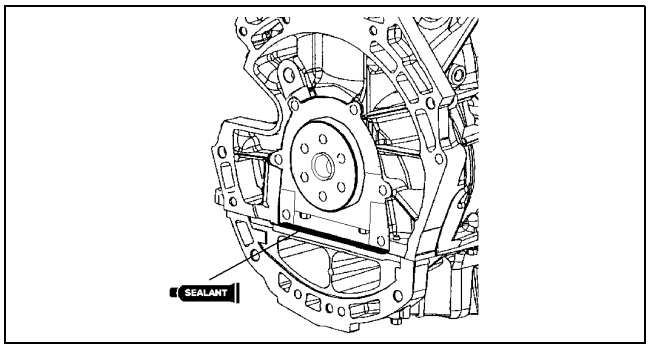

AME2224E325

3. Install the rear oil seal using the installer as shown.

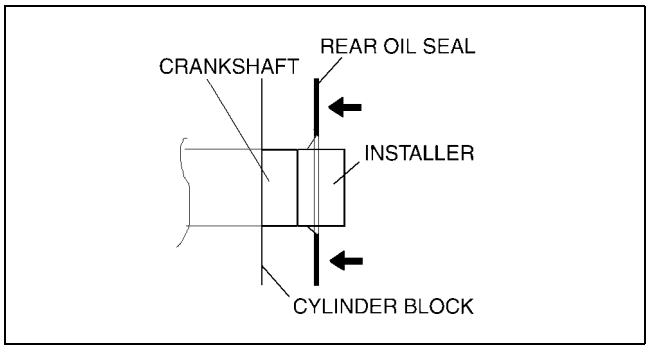

AME2224E326

4. Tighten the rear oil seal bolts in the order as shown.

   Tightening torque:
   8.0—11.5 N·m {81.6—117.2 kgf·m, 70.9—101.7 in·lbf}

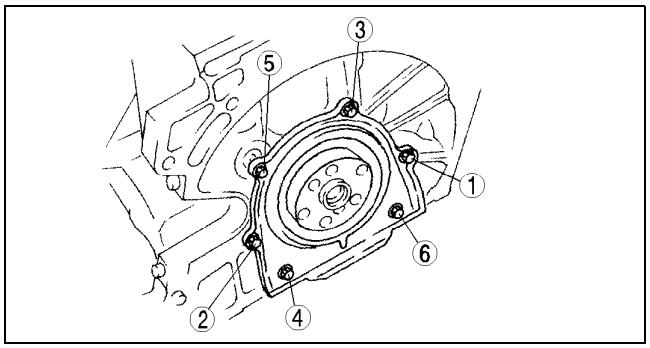

AME2224E002

Drive Plate (ATX), Flywheel (MTX) Assembly Note

1. Hold the crankshaft using the **SST**.
2. Tighten the bolts in the order indicated in the figure in several passes.

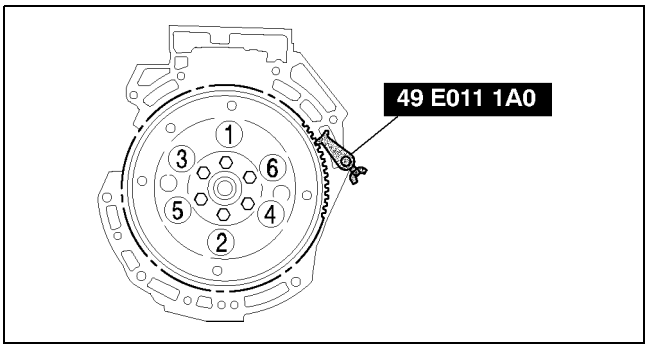

AME2224E102

Oil pan Assembly Note

1. Apply a continuous bead of silicone sealant to the oil pan as indicated in the figure.

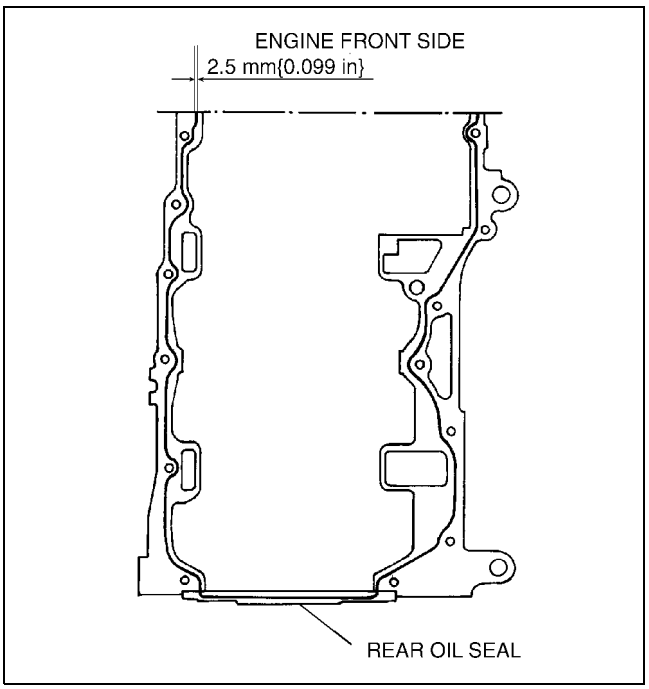

AME2224E555

2. Use a square ruler to unite the oil pan and the cylinder block junction side on the engine front cover side.

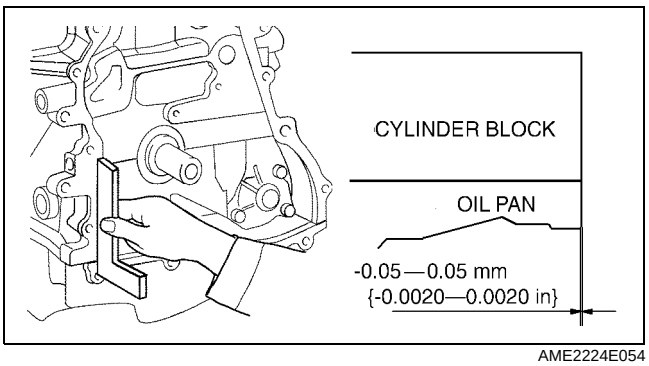

AME2224E054

3. Tighten the rear oil pan bolts in the order as shown.

Tightening torque:
20—30 N·m {2.1—3.0 kgf·m, 15.2—21.6 in·lbf}

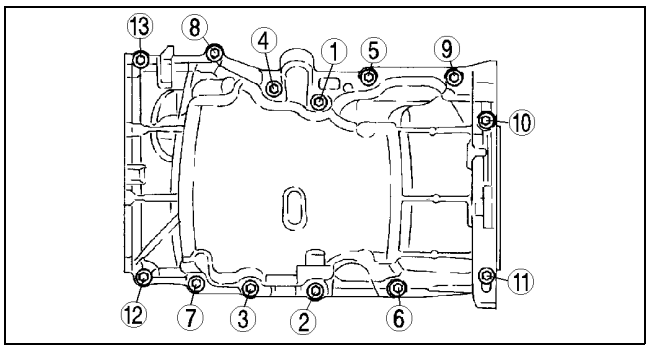

AME2224E056

CYLINDER HEAD (I) ASSEMBLY

A6E242402000E11

1. Assemble in the order indicated in the table.

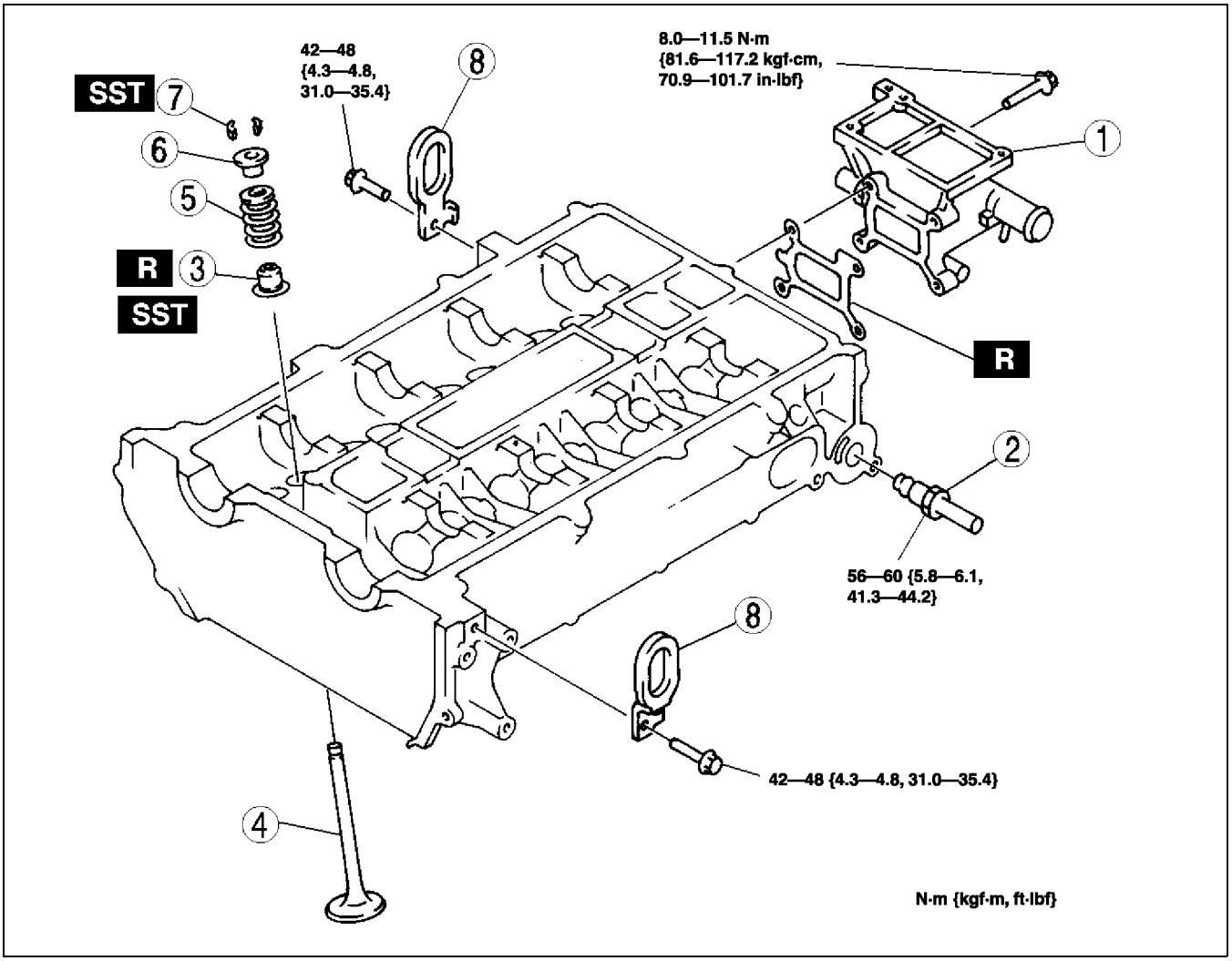

AME2224E044

1	Water outlet case
2	EGR pipe
3	Valve seal (See B–38 Valve Seal Assembly Note)
4	Valve

5	Valve spring
6	Upper valve spring seat
7	Valve keeper (See B–38 Valve Keeper Assembly Note)
8	Engine hanger

Valve Seal Assembly Note

1. Press the valve seal onto the valve guide by hand.
2. Lightly tap the **SST** using a plastic hammer.

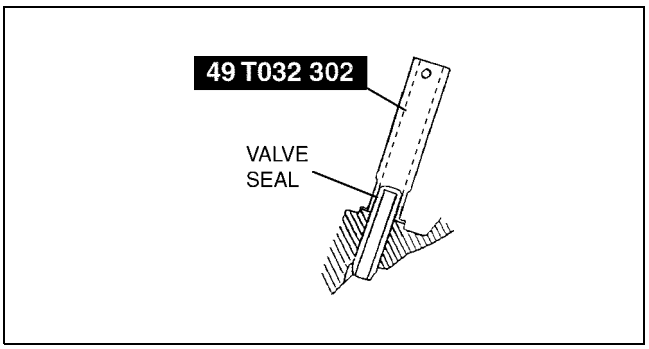

AME2224E321

Valve Keeper Assembly Note

1. Install the valve keeper using the **SSTs**.

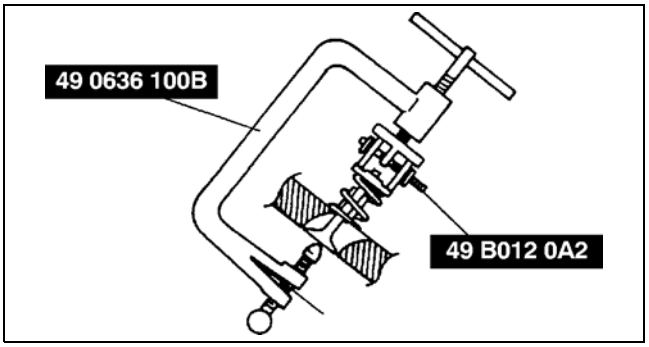

AME2224E302

CYLINDER HEAD (II) ASSEMBLY

A6E242402000E12

1. Assemble in the order indicated in the table.

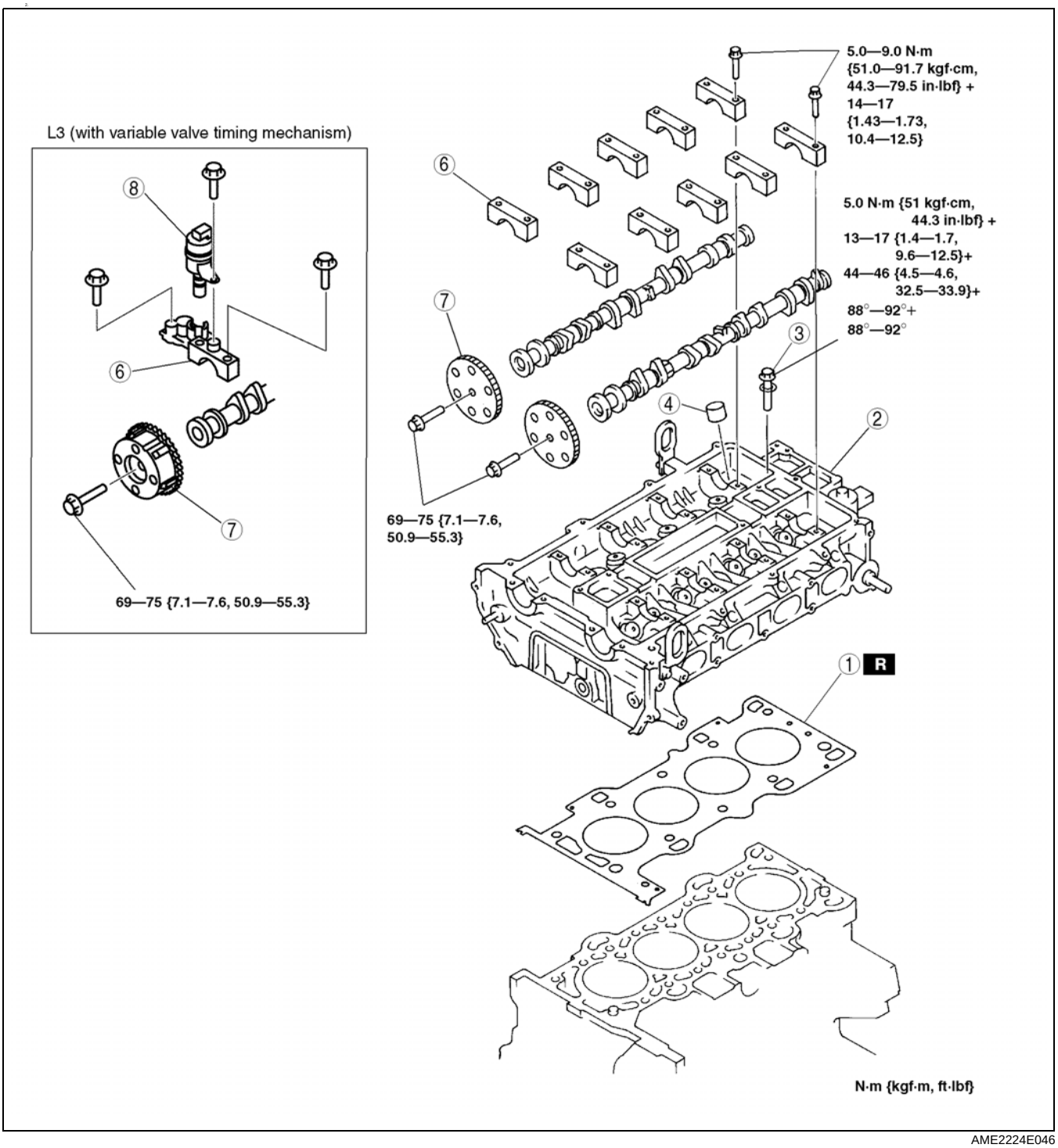

AME2224E046

1	Cylinder head gasket
2	Cylinder head
3	Cylinder head bolt (See B–40 Cylinder Head Bolt Assembly Note)
4	Tappet
5	Camshaft (See B–40 Camshaft Assembly Note)

6	Camshaft cap
7	Camshaft sprocket, Variable valve timing actuator (L3 (with variable valve timing mechanism)) (See B–40 Camshaft Sprocket, Variable Valve Timing Actuator (L3 (with variable valve timing mechanism)) Assembly Note)
8	Oil control valve (OCV) (L3 (with variable valve timing mechanism))

Cylinder Head Bolt Assembly Note

1. Tighten the cylinder head bolts in the order indicated in the figure in six steps.
   (1) Tighten to **5.0 N·m {51 kgf·cm, 44.3 in·lbf}**.
   (2) Tighten to **13— 17 N·m {1.4 —1.7 kgf·m, 9.6—12.5 ft·lbf}.**
   (3) Tighten to **44— 46 N·m {4.5 —4.6 kgf·m, 32.5—33.9 ft·lbf}**.
   (4) Tighten **88°—92°**.
   (5) Tighten **88°—92°**.

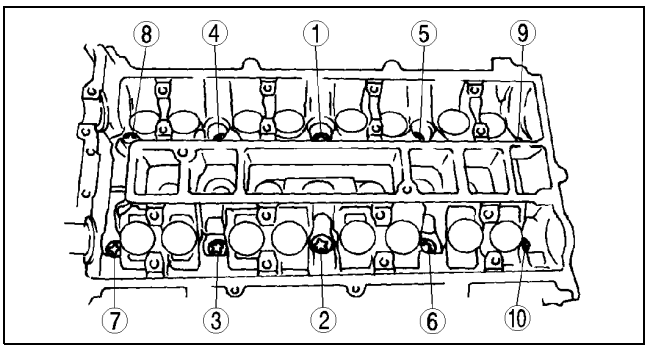

AME2224E047

Camshaft Assembly Note

1. Install the camshaft with No.1 cylinder aligned with TDC position.
2. Tighten the camshaft cap bolt using the following two steps.
   (1) Tighten to **5.0—9.0 N·m {51.0—91.7 kgf·cm, 44.3—79.5 in·lbf}**.
   (2) Tighten to **14.0—17.0 N·m {1.5—1.7 kgf·m, 10.4—12.5 ft·lbf}.**

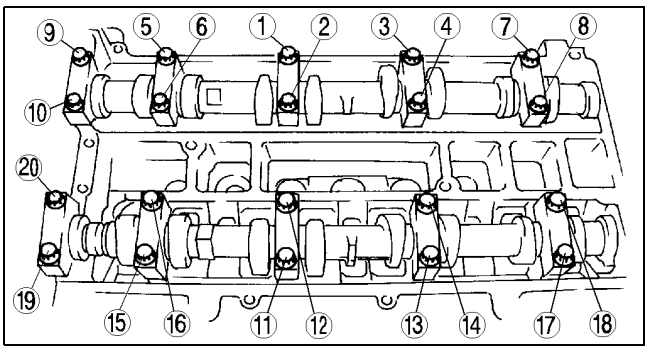

AME2224E048

Camshaft Sprocket, Variable Valve Timing Actuator (L3 (with variable valve timing mechanism)) Assembly Note

1. Camshaft sprocket or variable valve timing actuator (L3 (with variable valve timing mechanism)) attachment bolt is changed into the state of a temporary bundle by hand until it attaches timing chain.
2. The attachment bolt of camshaft sprocket or variable valve timing actuator (L3 (with variable valve timing mechanism)) is bound tight for timing chain after attachment.

Tightening torque
69—75 N·m {7.10—7.60 kgf·m, 50.9—55.3 ft·lbf}

L8, LF, L3

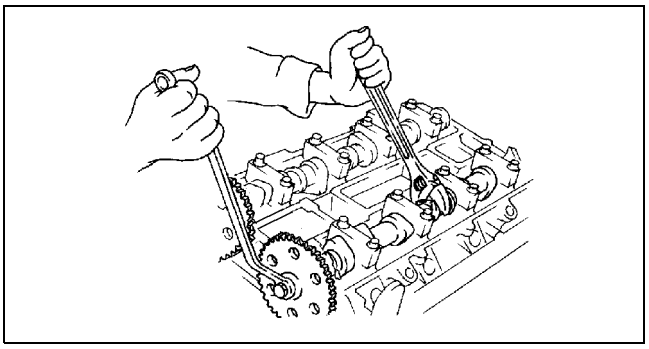
AME2224E077

L3 (with variable valve timing mechanism)

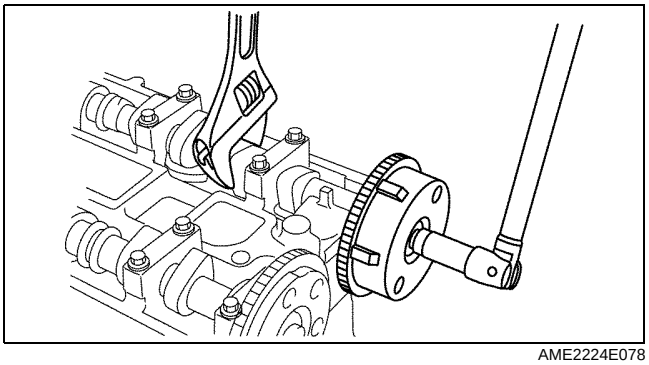
AME2224E078

TIMING CHAIN ASSEMBLY

A6E242402000E13

1. Assemble in the order indicated in the table.

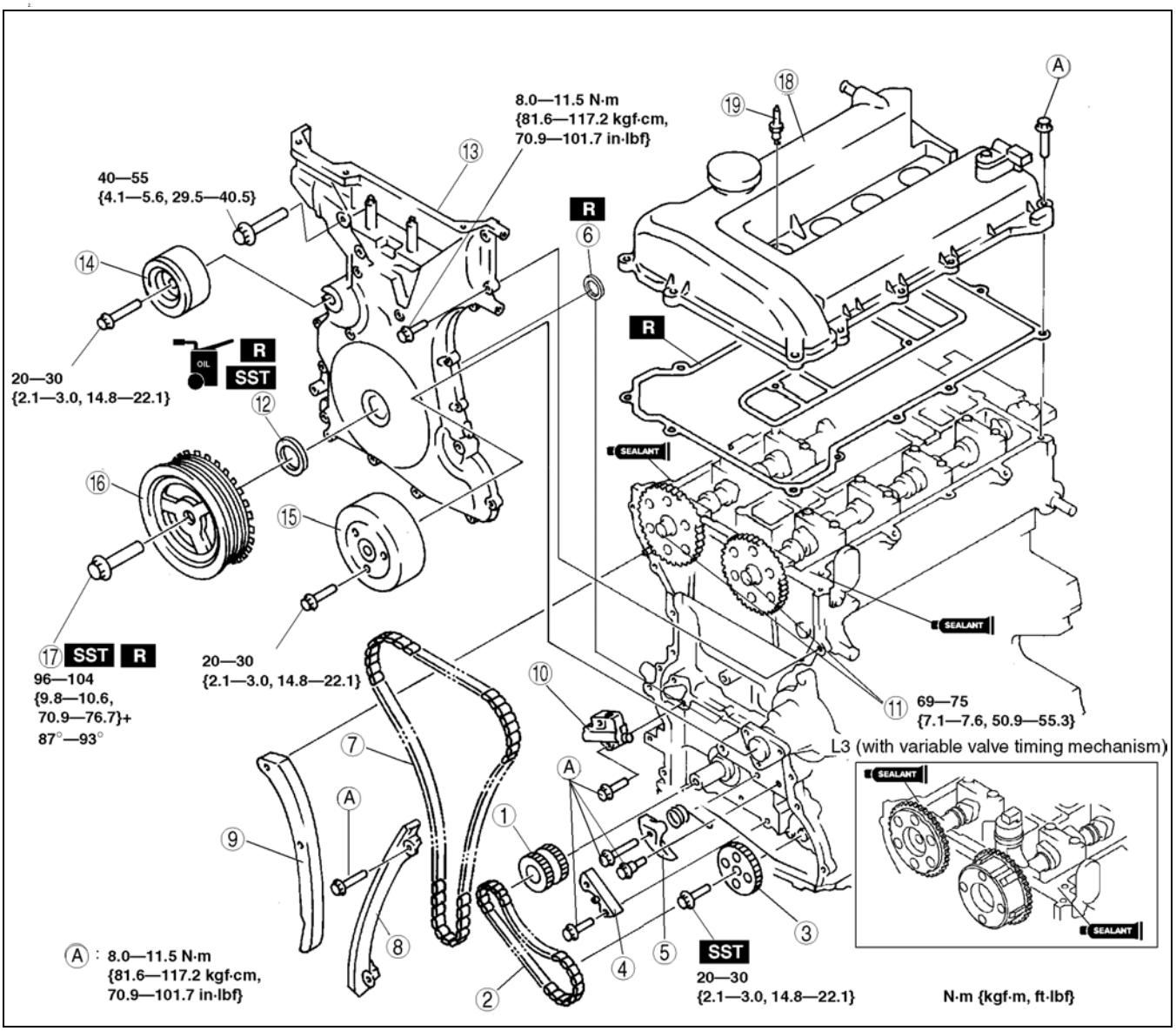

AME2224E327

1	Crankshaft sprocket
2	Oil pump chain
3	Oil pump sprocket (See B–42 Oil Pump Sprocket Assembly Note)
4	Oil pump chain guide
5	Oil pump chain tensioner
6	Seal (L3 (with variable valve timing mechanism))
7	Timing chain (See B–42 Timing Chain Aassembly Note)
8	Chain guide
9	Tensioner arm
10	Chain tensioner
11	Camshaft sprocket, Variable Valve Timing Actuator (L3 (with variable valve timing mechanism)) (See B–43 Camshaft Sprocket, Variable Valve Timing Actuator (L3 (with variable valve timing mechanism)) Assembly Note)

12	Front oil seal (See B–44 Front Oil Seal Aassembly Note)
13	Engine front cover (See B–44 Engine Front Cover Aassembly Note)
14	Drive belt idler pulley
15	Water pump pulley
16	Crankshaft pulley
17	Crankshaft pulley lock bolt (See B–45 Crankshaft Pulley Lock Bolt Aassembly Note)
18	Cylinder head cover (See B–46 Cylinder Head Cover Aassembly Note)
19	Spark plug

Oil Pump Sprocket Assembly Note

1. Hold the oil pump sprocket using the **SST**.

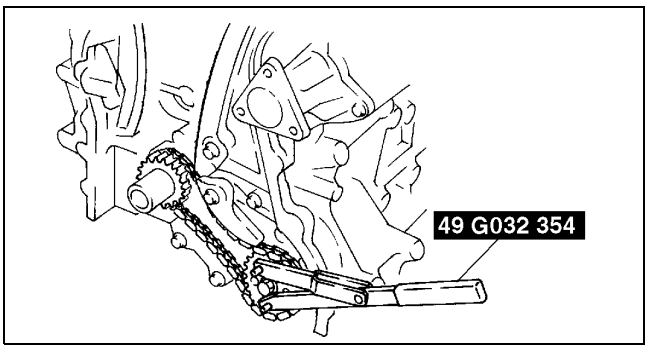

AME2224E340

Timing Chain Aassembly Note

1. Install the **SST** to the camshaft, then align the No. 1 camshaft position with the TDC.

Europe

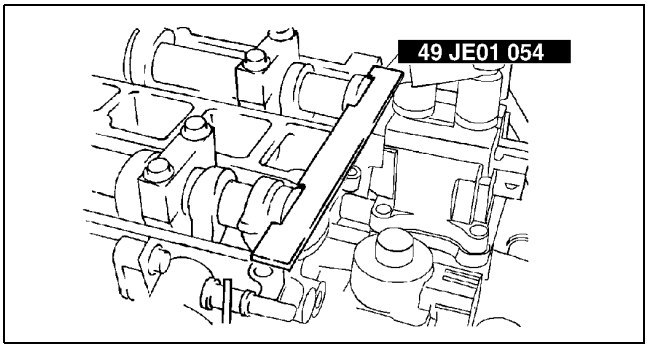

AME2224E329

Except Europe

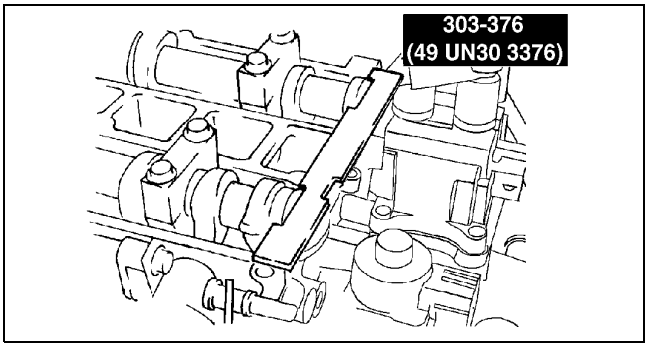

AME2224E328

2. Remove the cylinder block lower blind plug.
3. Install the **SST** as shown.
4. Turn the crankshaft clockwise so that the crankshaft is in the No.1 cylinder TDC position.
5. Install the timing chain.

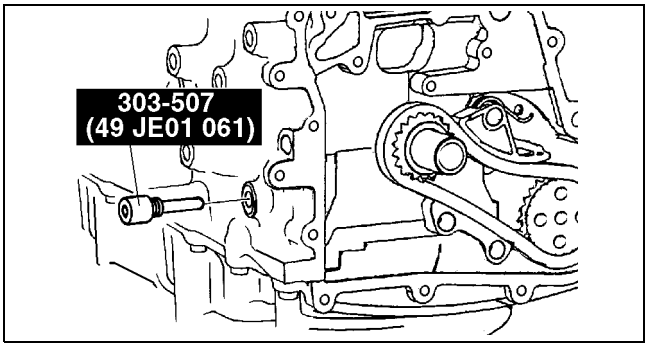

AMJ2224E666

6. Install the chain tensioner and remove the retaining wire.

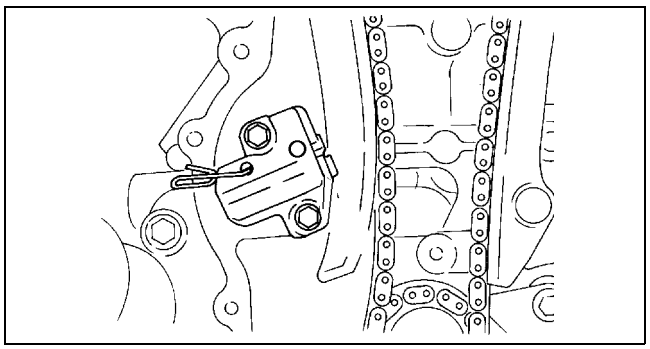

AME2224E330

Camshaft Sprocket, Variable Valve Timing Actuator (L3 (with variable valve timing mechanism)) Assembly Note

1. Hold the camshaft using a suitable wrench on the cast hexagon as shown.

L8, LF, L3

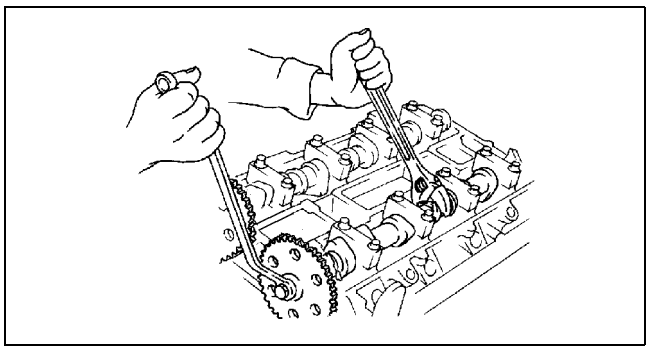

AME2224E077

L3 (with variable valve timing mechanism)

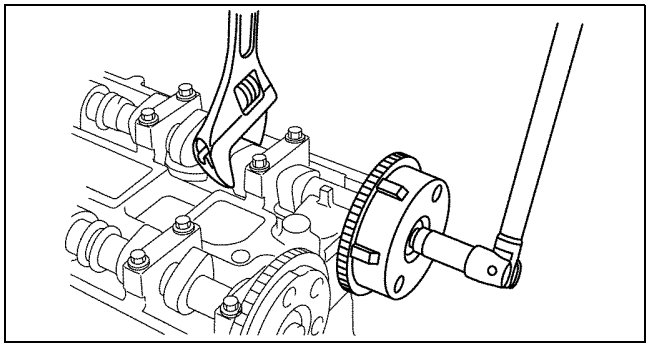

AME2224E078

2. Tighten the camshaft sprocket lock bolt.

Tightening torque: 69—75 N·m {7.10—7.6 kgf·m, 50.9—55.3 ft·lbf}

Front Oil Seal Aassembly Note

1. Apply clean engine oil to the oil seal.
2. Push the oil seal slightly in by hand.
3. Compress the oil seal using the SST and a hammer.

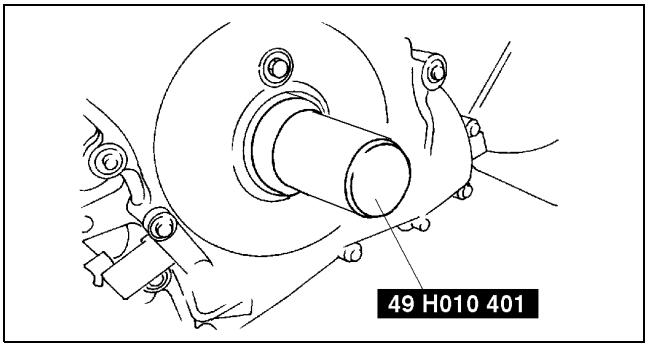

AME2224E331

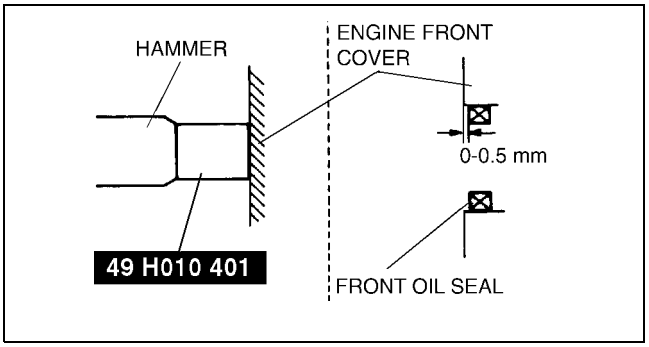

AME2224E332

Engine Front Cover Aassembly Note

1. Apply silicone sealant to the engine front cover as shown.

Caution

- **Install the cylinder head cover within 10 minutes of applying the silicone sealant.**
- **Silicone sealant is not need in area C as indicated below due to an existing. (L3 (with variable valve timing mechanism))**

Thickness

A: 2.0—3.0 mm {0.079—0.118 in}
B: 1.5—2.5 mm {0.059—0.098 in}

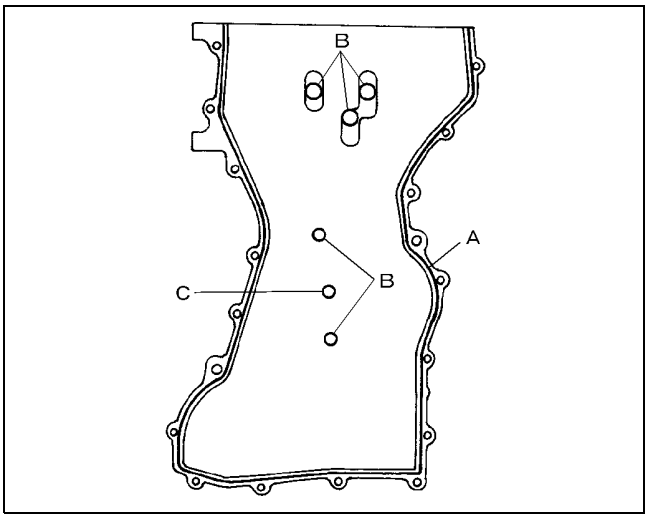

AME2224E333

2. Install the cylinder head cover bolts in the order as shown.

Bolt No.	Tigtining torque N·m {kgf·m, ft·lbf}
1—18	8.0—11.5 N·m {81.6—117.2 kgf·cm, 70.9—101.7 in·lbf}
19—22	40—55 {4.1—5.6, 29.7—40.5}

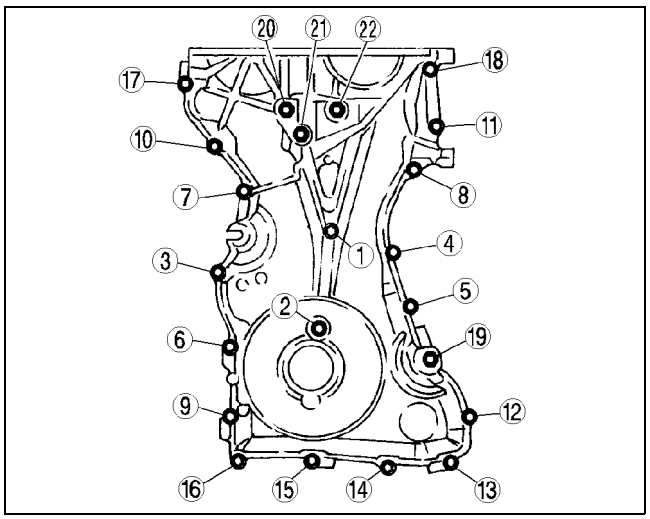

AME2224E334

Crankshaft Pulley Lock Bolt Aassembly Note

1. Install the **SST** to the camshaft as shown.

Europe

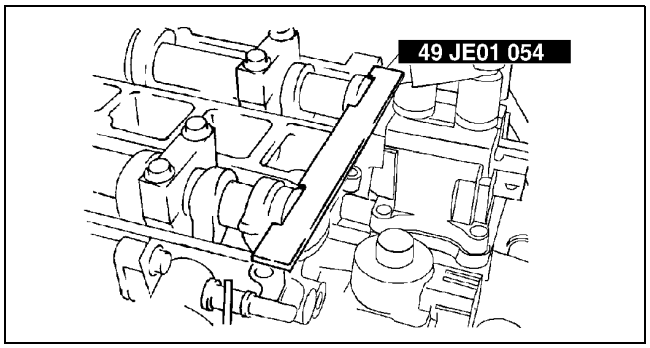

AME2224E329

Except Europe

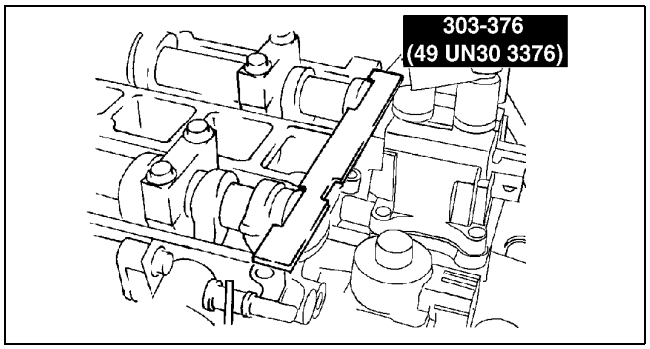

AME2224E328

2. Install the M6 x 1.0 bolt in by hand.
3. Turn the crankshaft clockwise so that the crankshaft is in the No.1 cylinder TDC position.

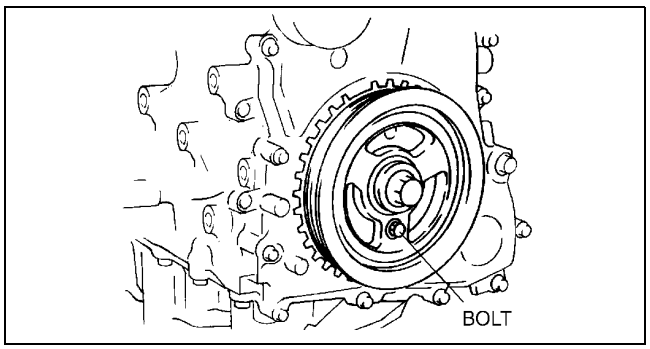

AME2224E009

4. Hold the crankshaft pully using the **SST**.
5. Tighten the crankshaft pulley lock bolt in the following two steps.
   (1) Tighten to **96—104 N·m {9.8—10.6 kgf·m, 70.9—76.7 ft·lbf}**
   (2) Tighten **87°—93° .**
6. Remove the M6 x 1.0 bolt.
7. Remove the **SST** from the camshaft.
8. Remove the **SST** from the block lower blind plug.
9. Rotate the crankshaft clockwise two turns until the TDC position.
   - If not aligned, loosen the crankshaft pulley lock bolt and repeat from Step 1.
10. Install the cylinder block lower blind plug.

Tightening torque: 20 N·m {2.0 kgf·m, 14.8 ft·lbf}

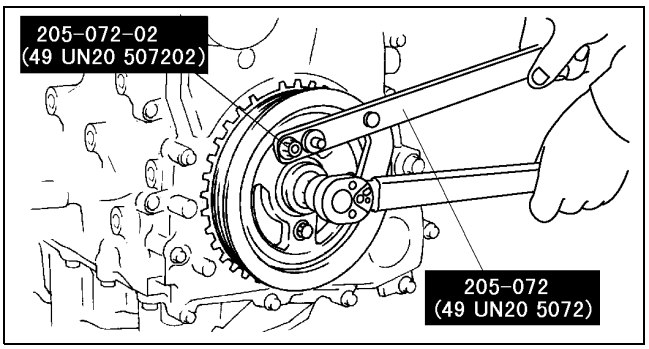

AME2224E015

Cylinder Head Cover Aassembly Note

1. Apply silicone sealant to the mating faces as shown.

   Caution
   - **Install the cylinder head cover within 10 minutes of applying the silicone sealant.**

   Dot diameter: 4.0—6.0 mm {0.16—0.23 in}

2. Install the cylinder head cover with a new gasket.

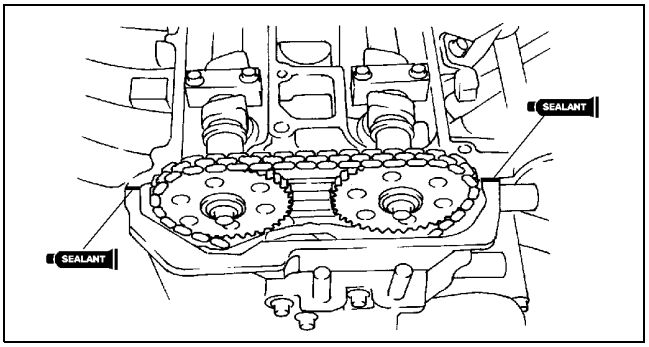

AME2224E335

3. Tighten the bolts in the order shown.

   Tightening torque: 8.0 —12 N·m {81.6—122.3 kgf·cm, 70.9—106.2 in·lbf}

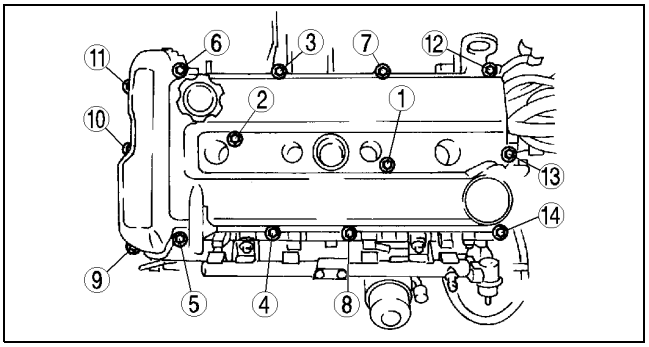

AME2224E336

TECHNICAL DATA

TECHNICAL DATA TD-2
ENGINE TECHNICAL DATA TD-2

TECHNICAL DATA

ENGINE TECHNICAL DATA

A6E931001001E01

Item				Engine		
				L8	LF	L3, L3 (with variable valve timing mechanism)
Cylinder head						
Cylinder head gasket contact surfaces distortion	(mm {in})	Maximum		0.10 {0.004}		
Manifold contact surfaces distortion	(mm {in})	Maximum		0.10 {0.004}		
		Maximum grinding		0.15 {0.006}		
Valve clearance [Engine cold]	(mm {in})		IN	0.22—0.28 {0.0087—0.0110}		
			EX	0.27—0.33 {0.0106—0.0130}		
Valve and valve guide						
Valve stem diameter	(mm {in})	Standard	IN	5.470—5.485 {0.2154—0.2159}		
			EX	5.465—5.480 {0.2152—0.2157}		
		Minimum	IN	5.440 {0.2142}		
			EX	5.435 {0.2140}		
Valve stem to guide clearance	(mm {in})	Standard	IN	0.024—0.069 {0.0009—0.0027}		
			EX	0.029—0.074 {0.0012—0.0029}		
		Maximum	IN	0.10 {0.004}		
			EX	0.10 {0.004}		
Valve length	(mm {in})	Standard	IN	102.99—103.79 {4.055—4.086}		
			EX	104.25—105.05 {4.105—4.135}		
		Minimum	IN	102.99 {4.055}		
			EX	103.79 {4.086}		
Valve guide inner diameter	(mm {in})	Standard	IN	5.509—5.539 {0.2169—0.2180}		
			EX	5.509—5.539 {0.2169—0.2180}		
Valve guide protrusion height	(mm {in})	IN		12.2—12.8 {0.481—0.503}		
		EX		12.2—12.8 {0.481—0.503}		
Valve head margin thickness	(mm {in})	Minimum	IN	1.62 {0.0637}		
			EX	1.82 {0.0716}		
Valve seat						
Valve seat contact width	(mm {in})	Standard	IN	1.2—1.6 {0.048—0.062}		
			EX	1.2—1.6 {0.048—0.062}		
Valve seat angle	(°)		IN	45		
			EX	45		
Valve seat sinking (Valve protrusion height)	(mm {in})	Standard	IN	40.64—42.24 {1.600—1.662}		
			EX	40.50—42.10{1.595—1.657}		
Valve spring						
Out-of-square	(mm {in})	Maximum		1% (2.10 {0.082})		
Pressing force at valve spring height H	(N {kgf, lbf})	H: 27.8 mm {1.094 in}		494.9 {50.47,111.2}		
OCV (Oil control valve)						
Coil resistance [20° C{68°F}]	(ohm)	Standard		–		6.9—7.9 *

Item				Engine		
				L8	LF	L3, L3 (with variable valve timing mechanism)
Camshaft						
Camshaft runout	(mm {in})	Maximum		0.03 {0.0012}		
Cam lobe height	(mm {in})	Standard	IN	40.79 {1.606}	42.12{1.659}	42.12 {1.659}
						42.44{1.671}*
			EX	41.08 {1.618}	41.08{1.618}	41.08 {1.618}
						41.18 {1.622}*
		Minimum	IN	40.692{1.603}	42.022{1.655}	42.022{1.655}
						42.342 {1.667}*
			EX	40.982 {1.614}	40.982{1.614}	40.982 {1.614}
						41.082 {1.618}*
Journal diameter	(mm {in})	Standard		24.96—24.98 {0.9827—0.9834}		
		Minimum		24.95 {0.982}		
Journal oil clearance	(mm {in})	Standard		0.04—0.08 {0.002—0.003}		
		Maximum		0.09 {0.0035}		
End play	(mm {in})	Standard		0.09—0.24 {0.0035—0.0094}		
		Maximum		0.25 {0.009}		
Tappet						
Tappet bore diameter	(mm {in})	Standard		31.000—31.030 {1.2205—1.2216}		
Tappet diameter	(mm {in})	Standard		30.970—30.980 {1.2193—1.2196}		
Tappet-to-Tappet bore oil clearance	(mm {in})	Standard		0.02—0.06{0.0008—0.0023}		
		Maximum		0.15 {0.006}		
Cylinder block						
Cylinder head gasket contact surfaces distortion	(mm {in})	Maximum		0.10 {0.004}		
Cylinder bore diameter [Measure the cylinder bore at 42 mm {1.65 in} below the top surface]	(mm {in})	Standard		83.000—83.030 {3.2677—3.2689}	87.500—87.530 {3.4449—3.4460}	
Minimum / maximum bore diameter Limit			(mm {in})	82.940—83.090 {3.2653—3.2712}	87.440—87.590 {3.4425—3.4484}	
Piston						
Piston diameter	(mm {in})	Standard		82.965—82.995 {3.2664—3.2675}	87.465—87.495 {3.4435—3.4446}	
Piston-to-cylinder clearance	(mm {in})	Standard		0.025—0.045 {0.0010—0.0017}		
		Maximum		0.11 {0.0043}		
Piston ring						
Piston ring-to-ring groove clearance	(mm {in})	Standard	Top	0.03—0.08 {0.0012—0.0031}		
			Second	0.03—0.07 {0.0012—0.0027}		
			Oil (rail)	0.03—0.07 {0.0012—0.0027}		
		Maximum	Top	0.17 {0.0067}		
			Second	0.15 {0.0059}		
			Oil (rail)	0.15 {0.0059}		
End gap (measured in cylinder)	(mm {in})	Standard	Top	0.16—0.31 {0.0063—0.0122}		
			Second	0.33—0.48 {0.0130—0.0189}		
			Oil (rail)	0.20—0.70 {0.0079—0.0275}		
		Maximum	Top	1.0 {0.0393}		
			Second	1.0 {0.0393}		
			Oil (rail)	1.0 {0.0393}		

Item			Engine		
			L8	LF	L3, L3 (with variable valve timing mechanism)
Connecting rod and connecting rod bearing					
Connecting rod side clearance	(mm {in})	Standard	0.14—0.36 {0.0056—0.0141}		
		Maximum	0.435 {0.0172}		
Connecting rod bearing size	(mm {in})	Standard	1.496—1.502 {0.0589—0.0591}		
		0.25 {0.01} Oversize	1.623—1.629 {0.0639—0.0641}		
		0.50 {0.02} Oversize	1.748—1.754 {0.0688—0.0690}		
Connecting rod bearing oil clearance	(mm {in})	Standard	0.026—0.052{0.0011—0.0020}		
		Maximum	0.10{0.0039}		
Crankshaft					
Crankshaft runout	(mm {in})	Maximum	0.05 {0.0019}		
Main journal diameter	(mm {in})	Standard	51.980—52.000 {2.0464—2.0472}		
		0.25 {0.01} undersize	51.730—51.750 {2.0366—2.0373}		
Main journal oil clearance	(mm {in})	Standard	0.019—0.035{0.0007—0.0013}		
		Maximum	0.10 {0.0039}		
Main journal out of round	(mm {in})	Maximum	0.05 {0.0019}		
Main bearing size	(mm {in})	Standard	2.506—2.509 {0.0987—0.0988}		
		0.25 {0.01} Oversize	2.628—2.634 {0.1034—0.1037}		
		0.50 {0.02} Oversize	2.753—2.759 {0.1084—0.1086}		
Crank pin journal diameter	(mm {in})	Standard	49.980—50.000 {1.9677—1.9685}		
		0.25 {0.01} undersize	49.730—49.750 {1.9579—1.9586}		
Crank pin out of round	(mm {in})	Maximum	0.05 {0.022}		
Crankshaft end play	(mm {in})	Standard	0.22—0.45{0.0087—0.0177}		
		Maximum	0.55 {0.0216}		
Front oil seal					
Pushing distance of the front oil seal [from the edge of the engine front cover]	(mm {in})		0—0.5 {0—0.019}		
Bolt					
Cylinder head bolt length		Standard	149.0—150.0 {5.86—5.90}		
		Maximum	150.5 {5.92}		
Connecting rod bolt length		Standard	44.7—45.3 {1.75—1.78}		
		Maximum	46.0 {1.81}		
Main bearing cap bolt length		Standard	110.0—110.6 {4.33—4.35}		
		Maximum	111.3 {4.38}		
Balance shaft					
Gear backlash	(mm {in})	Maximum	–		0.005-0.101 {0.00019—0.0039}

*: With variable valve timing mechanism

SPECIAL TOOLS

SPECIAL TOOLS ST-2
ENGINE SST ST-2

SPECIAL TOOLS

ENGINE SST

A6E941001001E01

Ford SST numbers are collated with Mazda SST numbers in the example below.
Ford SSTs are marked with Ford SST number.

Example

1:49 JE01 061 2:303-507 Peg 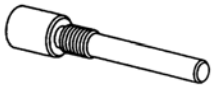

1: Mazda SST number
2: Ford SST number

1:49 JE01 061 2:303–507 Peg 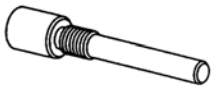	1:49 UN20 5072 2:205–072 Holder 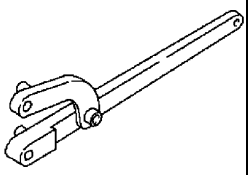	1:49 UN20 507202 2:205–072–02 Adapter 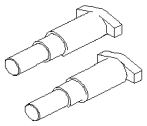
1:49 G032 354 2: – Adjusting wrench 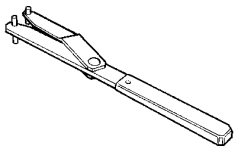	1:49 E011 1A0 2: – Ring gear brake set 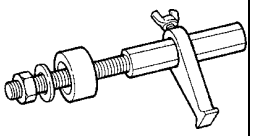	1:49 0636 100B 2: – Valve spring lifter arm 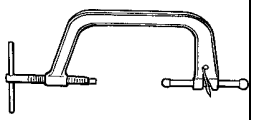
1:49 B012 0A2 2: – Pivot 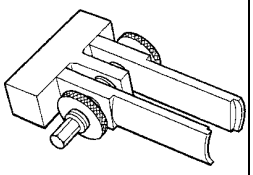	1:49 B012 015 2: – Valve guide installer 	1:49 H010 401 2: – Oil seal installer 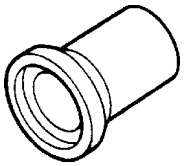
1:49 0107 680A 2: – Engine stand 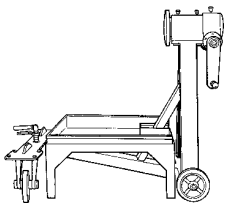	1:49 L010 1A0 2: – Engine hanger set 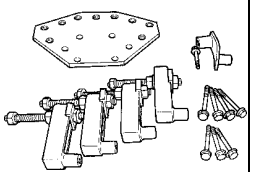	1:49 S120 170 2: – Valve seal remover 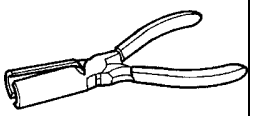
1:49 L012 0A0B 2: – Valve seal and valve guide installer set 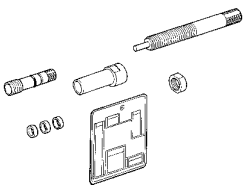	1:49 T032 302 2: – Bearing installer 	1:49 D032 316 2: – Protractor 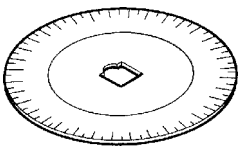

1:49 JE01 054 (Europe) 49 UN30 3376 (Except Europe) 2: 303–376 Plate 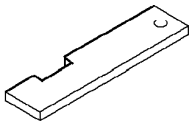	1:49 G011 201 2: – Attachment 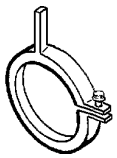	–

Engine Workshop Manual MZR–CD (RF Turbo)

FOREWORD

This manual explains the disassembly, inspection, repair, and reassembly procedures for the above-indicated engine. In order to do these procedures safely, quickly, and correctly, you must first read this manual and any other relevant service materials carefully.

The information in this manual is current up to April, 2002. Any changes that occur after that time will not be reflected in this particular manual. Therefore, the contents of this manual may not exactly match the mechanism that you are currently servicing.

Mazda Motor Corporation
HIROSHIMA, JAPAN

CONTENTS

Title	Section
General Information	GI
Engine	B
Technical Data	TD
Special Tools	ST

© 2002 Mazda Motor Corporation
PRINTED IN THE NETHERLANDS, APRIL 2002
1744–1E–02D

WARNING

Servicing a vehicle can be dangerous. If you have not received service-related training, the risks of injury, property damage, and failure of servicing increase. The recommended servicing procedures for the vehicle in this workshop manual were developed with Mazda-trained technicians in mind. This manual may be useful to non-Mazda trained technicians, but a technician with our service-related training and experience will be at less risk when performing service operations. However, all users of this manual are expected to at least know general safety procedures.

This manual contains "Warnings" and "Cautions" applicable to risks not normally encountered in a general technician's experience. They should be followed to reduce the risk of injury and the risk that improper service or repair may damage the vehicle or render it unsafe. It is also important to understand that the "Warnings" and "Cautions" are not exhaustive. It is impossible to warn of all the hazardous consequences that might result from failure to follow the procedures.

The procedures recommended and described in this manual are effective methods of performing service and repair. Some require tools specifically designed for a specific purpose. Persons using procedures and tools which are not recommended by Mazda Motor Corporation must satisfy themselves thoroughly that neither personal safety nor safety of the vehicle will be jeopardized.

The contents of this manual, including drawings and specifications, are the latest available at the time of printing, and Mazda Motor Corporation reserves the right to change the vehicle designs and alter the contents of this manual without notice and without incurring obligation.

Parts should be replaced with genuine Mazda replacement parts or with parts which match the quality of genuine Mazda replacement parts. Persons using replacement parts of lesser quality than that of genuine Mazda replacement parts must satisfy themselves thoroughly that neither personal safety nor safety of the vehicle will be jeopardized.

Mazda Motor Corporation is not responsible for any problems which may arise from the use of this manual. The cause of such problems includes but is not limited to insufficient service-related training, use of improper tools, use of replacement parts of lesser quality than that of genuine Mazda replacement parts, or not being aware of any revision of this manual.

GENERAL INFORMATION

HOW TO USE THIS MANUAL GI-2
RANGE OF TOPICS GI-2
SERVICE PROCEDURE GI-2
SYMBOLS GI-3
ADVISORY MESSAGES GI-4
UNITS GI-5
UNITS GI-5
FUNDAMENTAL PROCEDURES GI-6
PREPARATION OF TOOLS AND MEASURING EQUIPMENT GI-6
SPECIAL SERVICE TOOLS GI-6
DISASSEMBLY GI-6
INSPECTION DURING REMOVAL, DISASSEMBLY GI-7
ARRANGEMENT OF PARTS GI-7
CLEANING OF PARTS GI-7
REASSEMBLY GI-7
ADJUSTMENT GI-8
RUBBER PARTS AND TUBING GI-8
HOSE CLAMPS GI-8
TORQUE FORMULAS GI-9
VISE GI-9
ELECTRICAL SYSTEM GI-10
ELECTRICAL PARTS GI-10
CONNECTORS GI-10
NEW STANDARDS GI-13
NEW STANDARDS GI-13
ABBREVIATIONS GI-15
ABBREVIATIONS GI-15

HOW TO USE THIS MANUAL

RANGE OF TOPICS

AME201000001101

- This manual contains procedures for performing all required service operations. The procedures are divided into the following five basic operations:
  — Removal/Installation
  — Disassembly/Assembly
  — Replacement
  — Inspection
  — Adjustment
- Simple operations which can be performed easily just by looking at the vehicle (i.e., removal/installation of parts, jacking, vehicle lifting, cleaning of parts and visual inspection) have been omitted.

SERVICE PROCEDURE

AME201000001102

Inspection, adjustment

- Inspection and adjustment procedures are divided into steps. Important points regarding the location and contents of the procedures are explained in detail and shown in the illustrations.

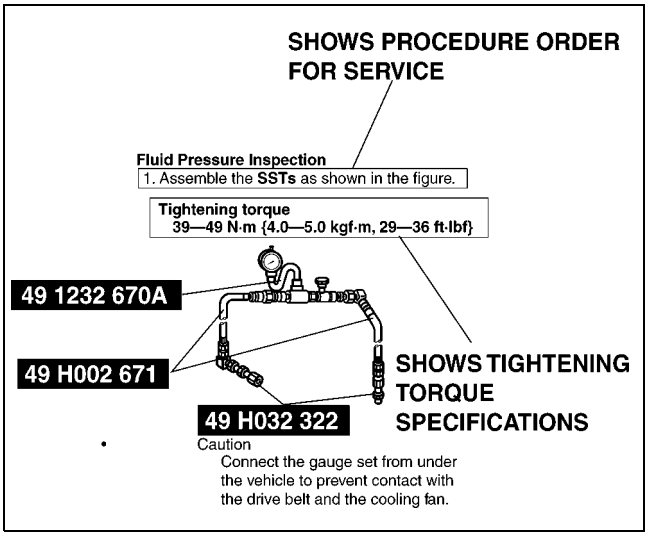

XME2010001

Repair procedure

1. Most repair operations begin with an overview illustration. It identifies the components, shows how the parts fit together and describes visual part inspection. However, only removal/installation procedures that need to be performed methodically have written instructions.
2. Expendable parts, tightening torques and symbols for oil, grease, and sealant are shown in the overview illustration. In addition, symbols indicating parts requiring the use of special service tools or equivalent are also shown.

3. Procedure steps are numbered and the part that is the main point of that procedure is shown in the illustration with the corresponding number. Occasionally, there are important points or additional information concerning a procedure. Refer to this information when servicing the related part.

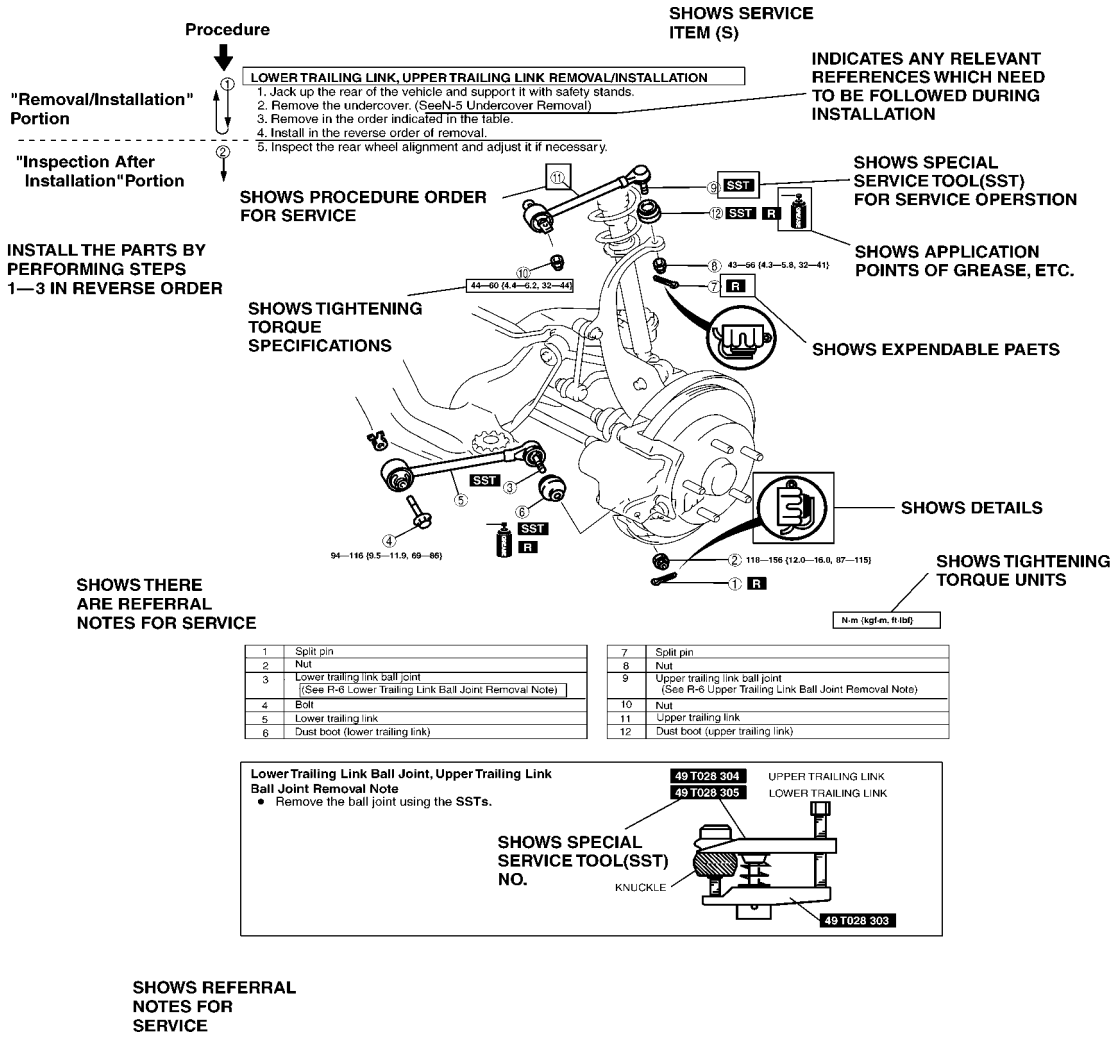

XME2010010

SYMBOLS

AME201000001103

- There are eight symbols indicating oil, grease, fluids, sealant, and **SST** or equivalent use. These symbols show application points or use of these materials during service.

Symbol	Meaning	Kind
	Apply oil	New appropriate engine oil or gear oil
	Apply brake fluid	New appropriate brake fluid

Symbol	Meaning	Kind
	Apply automatic transaxle/ transmission fluid	New appropriate automatic transaxle/ transmission fluid
	Apply grease	Appropriate grease
	Apply sealant	Appropriate sealant
	Apply petroleum jelly	Appropriate petroleum jelly
	Replace part	O-ring, gasket, etc.
	Use **SST** or equivalent	Appropriate tools

ADVISORY MESSAGES

AME201000001104

- You'll find several **Warnings**, **Cautions**, **Notes**, **Specifications** and **Upper and Lower Limits** in this manual.

Warning

- A Warning indicates a situation in which serious injury or death could result if the warning is ignored.

Caution

- A Caution indicates a situation in which damage to the vehicle or parts could result if the caution is ignored.

Note

- A Note provides added information that will help you to complete a particular procedure.

Specification

- The values indicate the allowable range when performing inspections or adjustments.

Upper and lower limits

- The values indicate the upper and lower limits that must not be exceeded when performing inspections or adjustments.

UNITS

UNITS

AME201200002101

Electrical current	A (ampere)
Electric power	W (watt)
Electric resistance	ohm
Electric voltage	V (volt)
Length	mm (millimeter)
	in (inch)
Negative pressure	kPa (kilo pascal)
	mmHg (millimeters of mercury)
	inHg (inches of mercury)
Positive pressure	kPa (kilo pascal)
	kgf/cm^2 (kilogram force per square centimeter)
	psi (pounds per square inch)
Torque	N·m (Newton meter)
	kgf·m (kilogram force meter)
	kgf·cm (kilogram force centimeter)
	ft·lbf (foot pound force)
	in·lbf (inch pound force)
Volume	L (liter)
	US qt (U.S. quart)
	Imp qt (Imperial quart)
	ml (milliliter)
	cc (cubic centimeter)
	cu in (cubic inch)
	fl oz (fluid ounce)
Weight	g (gram)
	oz (ounce)

Conversion to SI Units (Système International d'Unités)

- All numerical values in this manual are based on SI units. Numbers shown in conventional units are converted from these values.

Rounding Off

- Converted values are rounded off to the same number of places as the SI unit value. For example, if the SI unit value is 17.2 and the value after conversion is 37.84, the converted value will be rounded off to 37.8.

Upper and Lower Limits

- When the data indicates upper and lower limits, the converted values are rounded down if the SI unit value is an upper limit and rounded up if the SI unit value is a lower limit. Therefore, converted values for the same SI unit value may differ after conversion. For example, consider 2.7 kgf/cm^2 in the following specifications:

  210—260 kPa {2.1—2.7 kgf/cm^2, 30—38 psi}
  270—310 kPa {2.7—3.2 kgf/cm^2, 39—45 psi}

- The actual converted values for 2.7 kgf/cm^2 are 264 kPa and 38.4 psi. In the first specification, 2.7 is used as an upper limit, so the converted values are rounded down to 260 and 38. In the second specification, 2.7 is used as a lower limit, so the converted values are rounded up to 270 and 39.

FUNDAMENTAL PROCEDURES

PREPARATION OF TOOLS AND MEASURING EQUIPMENT

- Be sure that all necessary tools and measuring equipment are available before starting any work.

AME201400004101

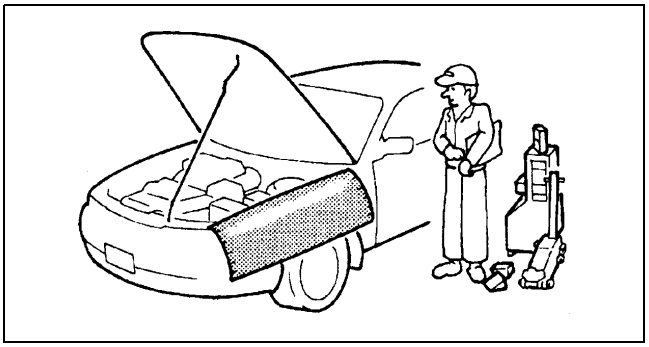

X3U000WAH

SPECIAL SERVICE TOOLS

- Use special service tools or equivalent when they are required.

AME201400004102

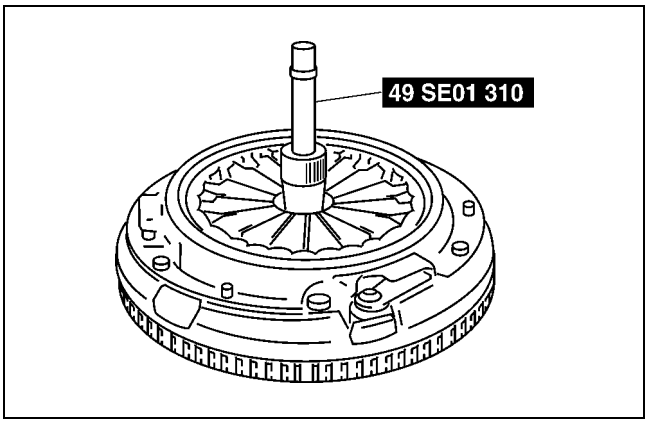

X3U000WAJ

DISASSEMBLY

- If the disassembly procedure is complex, requiring many parts to be disassembled, all parts should be marked in a place that will not affect their performance or external appearance and identified so that reassembly can be performed easily and efficiently.

AME201400004103

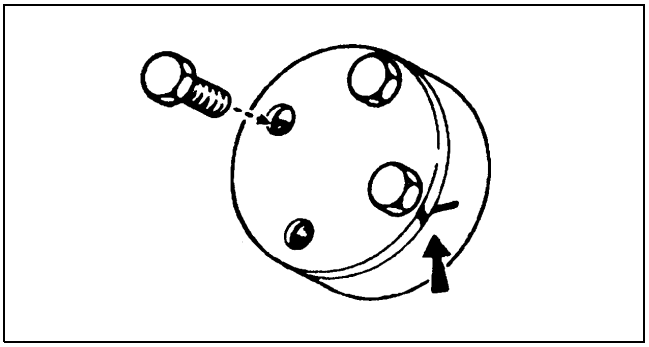

X3U000WAL

INSPECTION DURING REMOVAL, DISASSEMBLY

- When removed, each part should be carefully inspected for malfunction, deformation, damage, and other problems.

AME201400004104

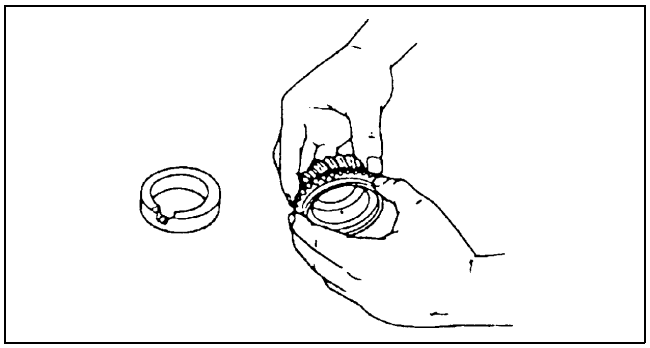

X3U000WAM

ARRANGEMENT OF PARTS

- All disassembled parts should be carefully arranged for reassembly.
- Be sure to separate or otherwise identify the parts to be replaced from those that will be reused.

AME201400004105

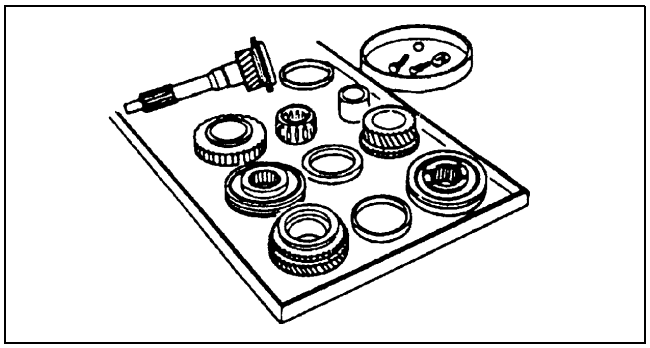

X3U000WAN

CLEANING OF PARTS

- All parts to be reused should be carefully and thoroughly cleaned in the appropriate method.

  Warning
  - **Using compressed air can cause dirt and other particles to fly out causing injury to the eyes. Wear protective eye wear whenever using compressed air.**

AME201400004106

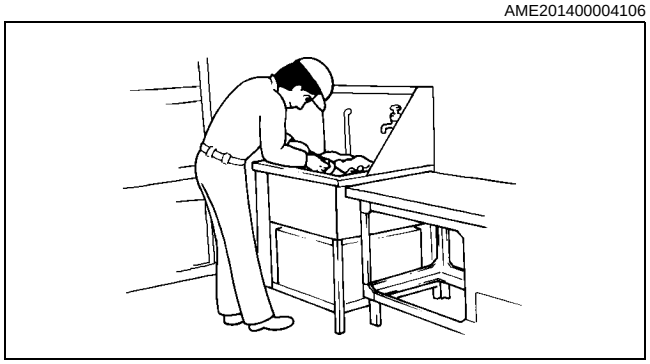

WGIWXX0030J

REASSEMBLY

- Standard values, such as torques and certain adjustments, must be strictly observed in the reassembly of all parts.
- If removed, these parts should be replaced with new ones:
  — Oil seals
  — Gaskets
  — O-rings
  — Lockwashers
  — Cotter pins
  — Nylon nuts

AME201400004107

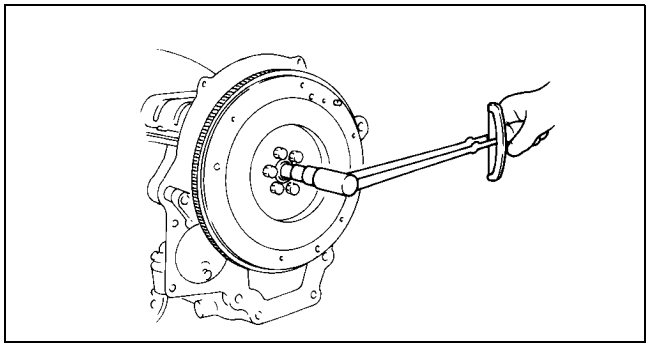

WGIWXX0031J

- Depending on location:
  — Sealant and gaskets, or both, should be applied to specified locations. When sealant is applied, parts should be installed before sealant hardens to prevent leakage.
  — Oil should be applied to the moving components of parts.
  — Specified oil or grease should be applied at the prescribed locations (such as oil seals) before reassembly.

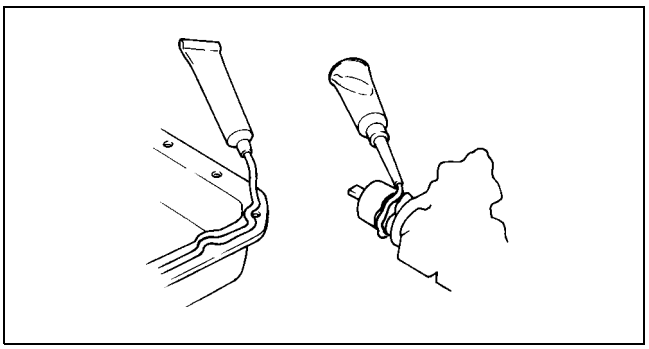

WGIWXX0032J

ADJUSTMENT

- Use suitable gauges and/or testers when making adjustments.

AME201400004108

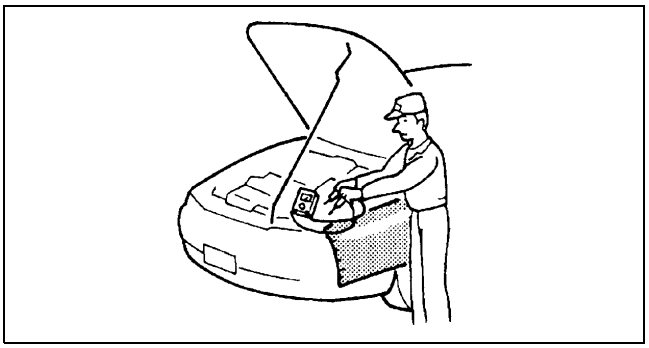

X3U000WAS

RUBBER PARTS AND TUBING

- Prevent gasoline or oil from getting on rubber parts or tubing.

AME201400004109

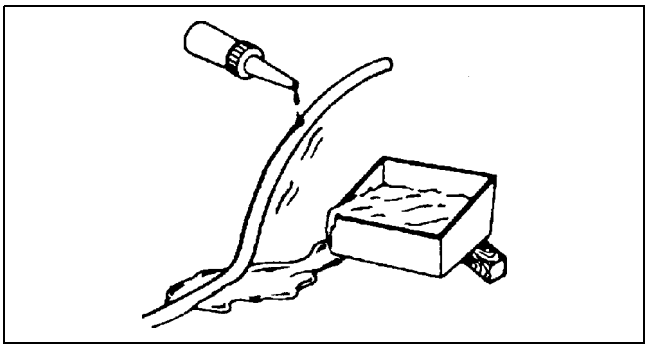

WGIWXX0034E

HOSE CLAMPS

- When reinstalling, position the hose clamp in the original location on the hose and squeeze the clamp lightly with large pliers to ensure a good fit.

AME201400004110

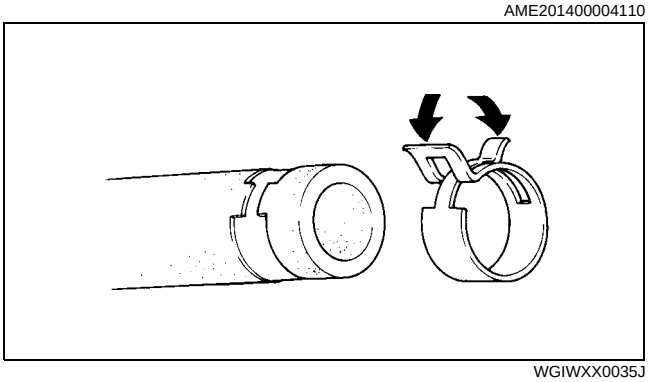

WGIWXX0035J

TORQUE FORMULAS

- When using a torque wrench-**SST** or equivalent combination, the written torque must be recalculated due to the extra length that the **SST** or equivalent adds to the torque wrench. Recalculate the torque using the following formulas. Choose the formula that applies to you.

Torque Unit	Formula
N·m	N·m × [L/(L+A)]
kgf·m	kgf·m × [L/(L+A)]
kgf·cm	kgf·cm × [L/(L+A)]
ft·lbf	ft·lbf × [L/(L+A)]
in·lbf	in·lbf × [L/(L+A)]

A : The length of the **SST** past the torque wrench drive
L : The length of the torque wrench

AME201400004111

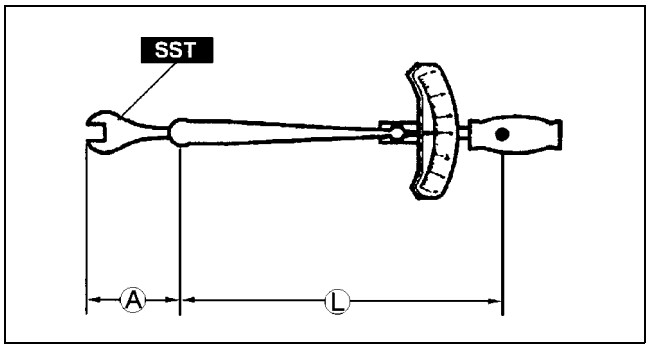

WGIWXX0036E

VISE

- When using a vise, put protective plates in the jaws of the vise to prevent damage to parts.

AME201400004112

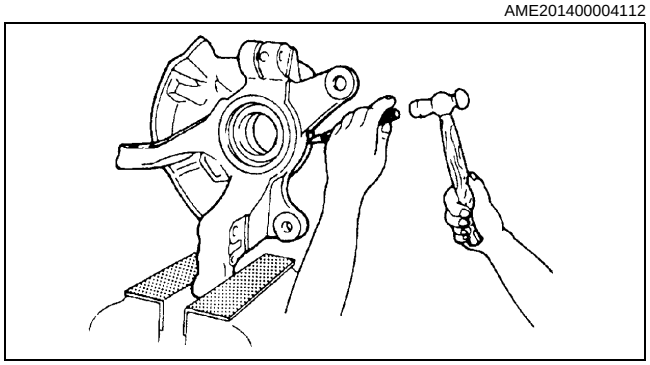

X3U000WAW

ELECTRICAL SYSTEM

ELECTRICAL PARTS

AME201700006101

Battery cable

- Before disconnecting connectors or removing electrical parts, disconnect the negative battery cable.

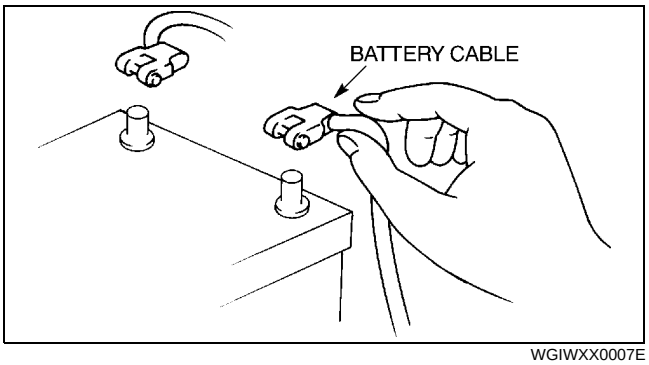

WGIWXX0007E

Wiring Harness

- To remove the wiring harness from the clip in the engine room, pry up the hook of the clip using a flathead screwdriver.

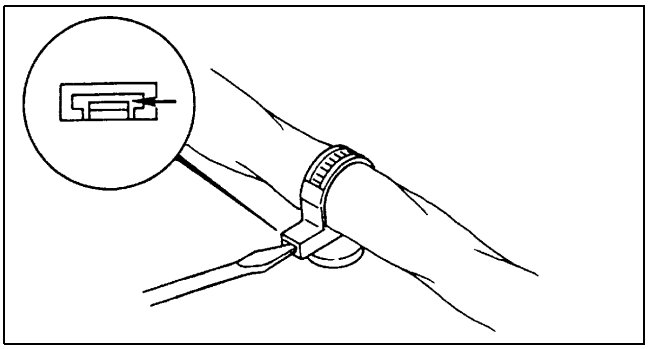

X3U000WBU

CONNECTORS

AME201700006102

Data link connector

- Insert the probe into the terminal when connecting a jumper wire to the data link connector.

Caution

- **Inserting a jumper wire probe into the data link connector terminal may damage the terminal.**

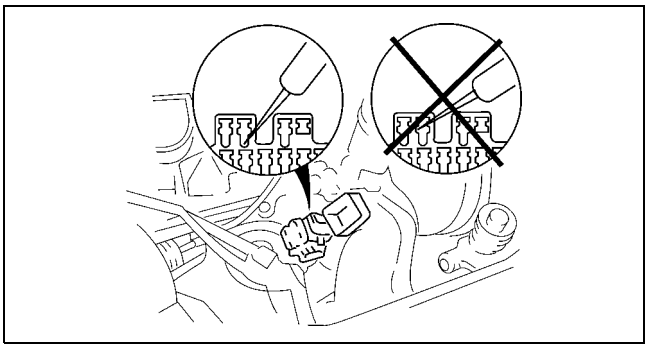

X3U000WAY

Disconnecting connectors

- When disconnecting connector, grasp the connectors, not the wires.

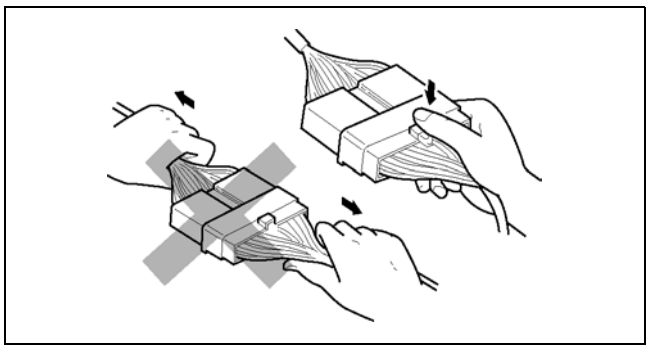

WGIWXX0041E

- Connectors can be disconnected by pressing or pulling the lock lever as shown.

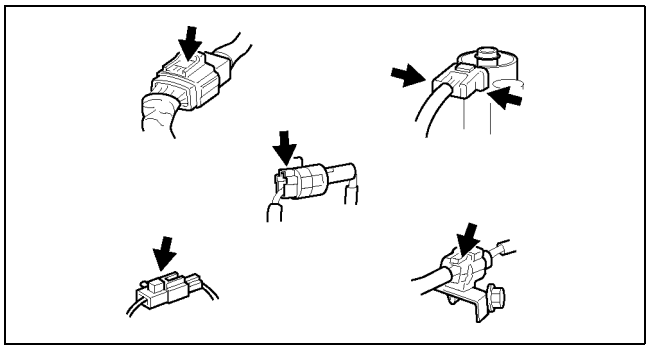

WGIWXX0042E

Locking connector

- When locking connectors, listen for a click indicating they are securely locked.

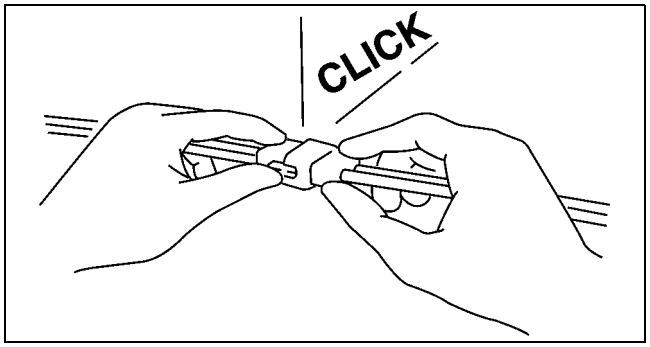

X3U000WB1

Inspection

- When a tester is used to inspect for continuity or measuring voltage, insert the tester probe from the wiring harness side.

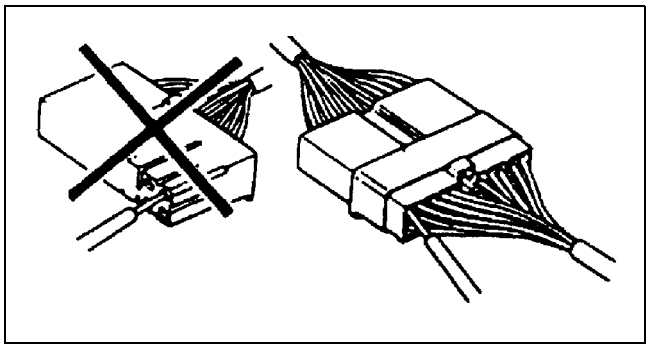

X3U000WB2

- Inspect the terminals of waterproof connectors from the connector side since they cannot be accessed from the wiring harness side.

Caution
- **To prevent damage to the terminal, wrap a thin wire around the tester probe before inserting into terminal.**

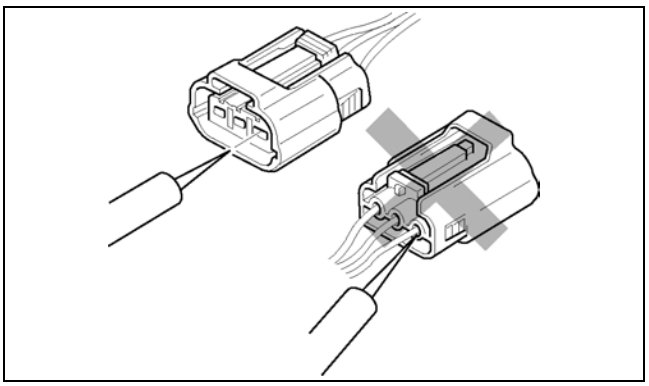

WGIWXX0045E

Terminals
Inspection

- Pull lightly on individual wires to verify that they are secured in the terminal.

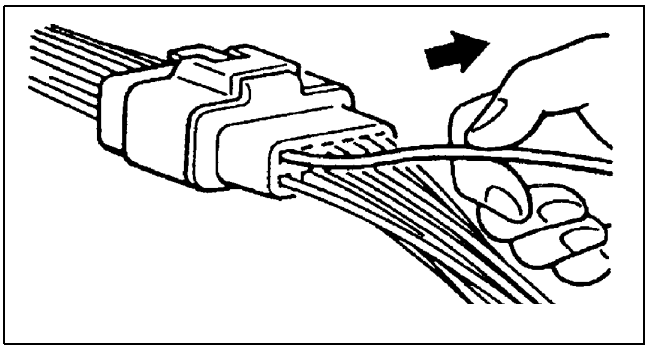

X3U000WB4

Wiring Harness
Wiring color codes

- Two-color wires are indicated by a two-color code symbol.
- The first letter indicates the base color of the wire and the second the color of the stripe.

CODE	COLOR	CODE	COLOR
B	Black	O	Orange
BR	Brown	P	Pink
G	Green	R	Red
GY	Gray	V	Violet
L	Blue	W	White
LB	Light Blue	Y	Yellow
LG	Light Green		

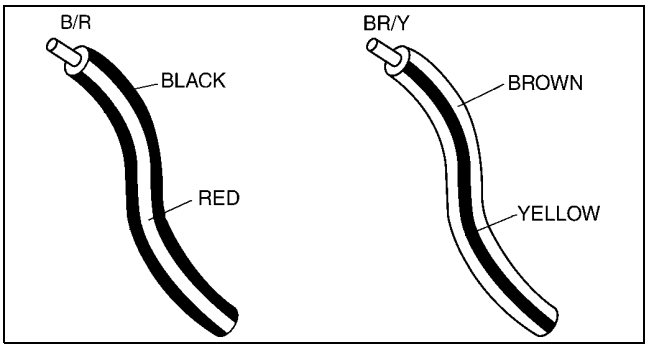

X3U000WB7

NEW STANDARDS

NEW STANDARDS

AME202800020101

- Following is a comparison of the previous standard and the new standard.

New Standard		Previous Standard		Remark
Abbreviation	Name	Abbreviation	Name	
AP	Accelerator Pedal	—	Accelerator Pedal	
ACL	Air Cleaner	—	Air Cleaner	
A/C	Air Conditioning	—	Air Conditioning	
BARO	Barometric Pressure	—	Atmospheric Pressure	
B+	Battery Positive Voltage	Vb	Battery Voltage	
—	Brake Switch	—	Stoplight Switch	
—	Calibration Resistor	—	Corrected Resistance	#6
CMP sensor	Camshaft Position Sensor	—	Crank Angle Sensor	
CAC	Charge Air Cooler	—	Intercooler	
CLS	Closed Loop System	—	Feedback System	
CTP	Closed Throttle Position	—	Fully Closed	
CPP	Clutch Pedal Position	—	Idle Switch	
CIS	Continuous Fuel Injection System	—	Clutch Position	
CS sensor	Control Sleeve Sensor	CSP sensor	Control Sleeve Position Sensor	#6
CKP sensor	Crankshaft Position Sensor	—	Crank Angle Sensor 2	
DLC	Data Link Connector	—	Diagnosis Connector	
DTM	Diagnostic Test Mode	—	Test Mode	#1
DTC	Diagnostic Trouble Code(s)	—	Service Code(s)	
DI	Distributor Ignition	—	Spark Ignition	
DLI	Distributorless Ignition	—	Direct Ignition	
EI	Electronic Ignition	—	Electronic Spark Ignition	#2
ECT	Engine Coolant Temperature	—	Water Thermo	
EM	Engine Modification	—	Engine Modification	
—	Engine Speed Input Signal	—	Engine RPM Signal	
EVAP	Evaporative Emission	—	Evaporative Emission	
EGR	Exhaust Gas Recirculation	—	Exhaust Gas Recirculation	
FC	Fan Control	—	Fan Control	
FF	Flexible Fuel	—	Flexible Fuel	
4GR	Fourth Gear	—	Overdrive	
—	Fuel Pump Relay	—	Circuit Opening Relay	#3
FSO solenoid	Fuel Shut Off Solenoid	FCV	Fuel Cut Valve	#6
GEN	Generator	—	Alternator	
GND	Ground	—	Ground/Earth	
HO2S	Heated Oxygen Sensor	—	Oxygen Sensor	With heater
IAC	Idle Air control	—	Idle Speed Control	
—	IDM Relay	—	Spill Valve Relay	#6
—	Incorrect Gear Ratio	—	—	
—	Injection Pump	FIP	Fuel Injection Pump	#6
—	Input/Turbine Speed Sensor	—	Pulse Generator	
IAT	Intake Air Temperature	—	Intake Air Thermo	
KS	Knock Sensor	—	Knock Sensor	
MIL	Malfunction Indicator Lamp	—	Malfunction Indicator Light	
MAP	Manifold Absolute Pressure	—	Intake Air Pressure	
MAF sensor	Mass Air Flow Sensor	—	Airflow Sensor	
MFL	Multiport Fuel Injection	—	Multiport Fuel Injection	
OBD	On-Board Diagnostic	—	Diagnosis/SelfDiagnosis	
OL	Open Loop	—	Open Loop	

New Standard		Previous Standard		Remark
Abbrevi-ation	Name	Abbrevi-ation	Name	
—	Output Speed Sensor	—	Vehicle Speed Sensor 1	
OC	Oxidation Catalytic Converter	—	Catalytic Converter	
O2S	Oxygen Sensor	—	Oxygen Sensor	
PNP	Park/Neutral Position	—	Park/Neutral Range	
—	PCM Control Relay	—	Main Relay	#6
PSP	Power Steering Pressure	—	Power Steering Pressure	
PCM	Powertrain Control Module	ECU	Engine Control Unit	#4
—	Pressure Control Solenoid	—	Line Pressure Solenoid Valve	
PAIR	Pulsed Secondary Air Injection	—	Secondary Air Injection System	Pulsed injection
—	Pump Speed Sensor	—	NE Sensor	#6
AIR	Secondary Air Injection	—	Secondary Air Injection System	Injection with air pump
SAPV	Secondary Air Pulse Valve	—	Reed Valve	
SFI	Sequential Multipoint Fuel Injection	—	Sequential Fuel Injection	
—	Shift Solenoid A	—	1–2 Shift Solenoid Valve	
		—	Shift A Solenoid Valve	
—	Shift Solenoid B	—	2–3 Shift Solenoid Valve	
		—	Shift B Solenoid Valve	
—	Shift Solenoid C	—	3–4 Shift Solenoid Valve	
3GR	Third Gear	—	3rd Gear	
TWC	Three Way Catalytic Converter	—	Catalytic Converter	
TB	Throttle Body	—	Throttle Body	
TP sensor	Throttle Position Sensor	—	Throttle Sensor	
TCV	Timer Control Valve	TCV	Timing Control Valve	#6
TCC	Torque Converter Clutch	—	Lockup Position	
TCM	Transmission (Transaxle) Control Module	—	ECAT Control Unit	
—	Transmission (Transaxle) Fluid Temperature Sensor	—	ATF Thermosensor	
TR	Transmission (Transaxle) Range	—	Inhibitor Position	
TC	Turbocharger	—	Turbocharger	
VSS	Vehicle Speed Sensor	—	Vehicle Speed Sensor	
VR	Voltage Regulator	—	IC Regulator	
VAF sensor	Volume Air Flow Sensor	—	Air flow Sensor	
WUTWC	Warm Up Three Way Catalytic Converter	—	Catalytic Converter	#5
WOT	Wide Open Throttle	—	Fully Open	

#1 : Diagnostic trouble codes depend on the diagnostic test mode
#2 : Controlled by the PCM
#3 : In some models, there is a fuel pump relay that controls pump speed. That relay is now called the fuel pump relay (speed).
#4 : Device that controls engine and powertrain
#5 : Directly connected to exhaust manifold
#6 : Part name of diesel engine

ABBREVIATIONS

ABBREVIATIONS

AME203000011101

BDC	Bottom dead center
EX	Exhaust
IN	Intake
max	Maximum
min	Minimum
SST	Special service tool
TDC	Top dead center

ENGINE

ENGINE B-2
ENGINE OVERHAUL SERVICE WARNING B-2
MOUNTING B-2
ENGINE DISMOUNTING B-3
TIMING BELT DISASSEMBLY B-3
CYLINDER HEAD (I) DISASSEMBLY B-7
CYLINDER HEAD (II) DISASSEMBLY B-8
CYLINDER BLOCK (I) DISASSEMBLY B-10
CYLINDER BLOCK (II) DISASSEMBLY B-13
CYLINDER HEAD INSPECTION B-14
VALVE, VALVE GUIDE INSPECTION B-15
VALVE GUIDE REPLACEMENT B-16
VALVE SEAT INSPECTION/REPAIR B-17
VALVE SPRING INSPECTION B-18
CAMSHAFT INSPECTION B-18
CAMSHAFT OIL CLEARANCE INSPECTION B-19
CAMSHAFT END PLAY INSPECTION B-19
CYLINDER BLOCK INSPECTION/REPAIR B-20
OIL JET VALVE, NOZZLE INSPECTION B-20
PISTON INSPECTION B-21
PISTON CLEARANCE INSPECTION/REPAIR B-21
PISTON RING CLEARANCE INSPECTION B-21
PISTON PIN CLEARANCE INSPECTION B-22
CRANKSHAFT INSPECTION B-22
CRANKSHAFT OIL CLEARANCE INSPECTION/REPAIR B-23
CRANKSHAFT END PLAY INSPECTION/REPAIR B-24
CONNECTING ROD INSPECTION B-24
CONNECTING ROD OIL CLEARANCE INSPECTION/REPAIR B-24
CONNECTING ROD SIDE CLEARANCE INSPECTION B-25
PISTON AND CONNECTING ROD INSPECTION B-25
CYLINDER HEAD BOLT INSPECTION B-25
TIMING BELT AUTO TENSIONER INSPECTION B-26
PILOT BEARING INSPECTION B-26
OIL PUMP INSPECTION B-27
VALVE CLEARANCE INSPECTION B-28
VALVE CLEARANCE ADJUSTMENT B-28
CYLINDER BLOCK (I) ASSEMBLY B-30
CYLINDER BLOCK (II) ASSEMBLY B-32
CYLINDER HEAD (I) ASSEMBLY B-37
CYLINDER HEAD (II) ASSEMBLY B-39
TIMING BELT ASSEMBLY B-43

ENGINE

ENGINE OVERHAUL SERVICE WARNING

AME222402000101

Warning
- **Continuous exposure with USED engine oil has caused skin cancer in laboratory mice. Protect your skin by washing with soap and water immediately after this work.**

MOUNTING

AME222402000102

1. Install the **SST** (arms) to the cylinder block holes as shown, and hand-tighten the **SST** (bolts).

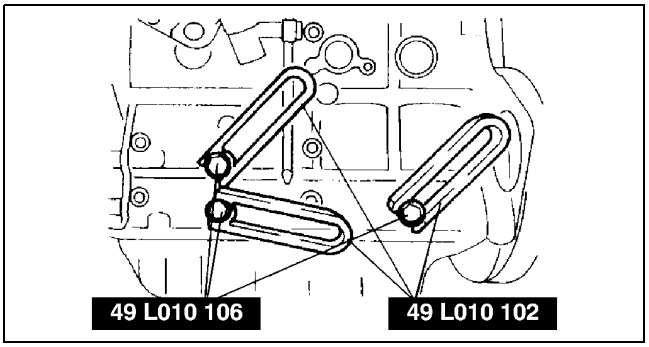

AME2524E001

2. Assemble the **SSTs** (bolts, nuts, and plate) to the specified positions.
3. Install the **SSTs** (bolts, nuts, and plate) assembled in Step 2 to the **SSTs** (arms) installed in Step 1.
4. Adjust the **SSTs** (bolts) so that the thread is exposed less than 20 mm {0.79 in}.
5. Make the **SSTs** (plate and arms) parallel by adjusting the **SSTs** (bolts and nuts).

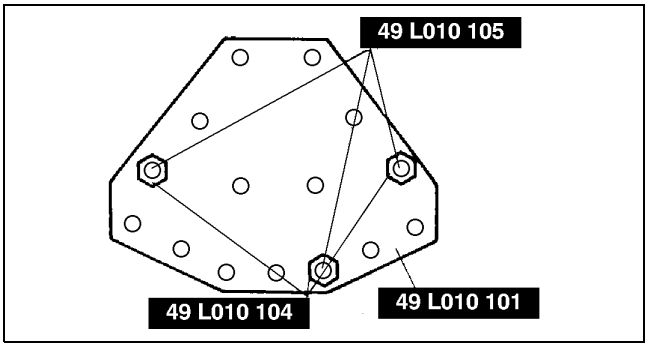

AME2524E002

6. Tighten the **SSTs** (bolts and nuts) to affix the **SST** firmly.

Warning
- **The self-locking brake system of the engine stand may not be effective when the engine is held in an unbalanced position. This could lead to sudden, rapid movement of the engine and mounting stand handle and cause serious injury. Never keep the engine in an unbalanced position, and always hold the rotating handle firmly when turning the engine.**

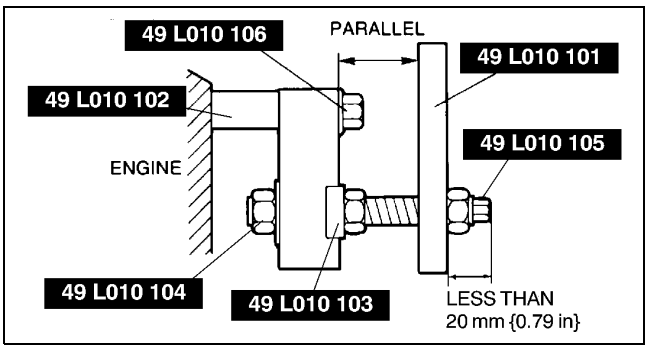

AME2524E003

7. Mount the engine on the **SST** (engine stand).
8. Drain the engine oil into a container.
9. Install the drain plug and a new washer.

Tightening torque
30—41 N·m {3.0—42 kgf·m, 22—30 ft·lbn}

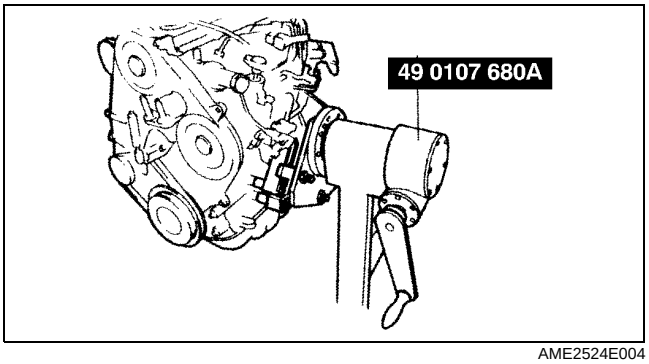

AME2524E004

ENGINE DISMOUNTING

AME222402000103

1. Dismount in the reverse order of mounting.

TIMING BELT DISASSEMBLY

AME222402000112

1. Disassemble in the order indicated in the table.

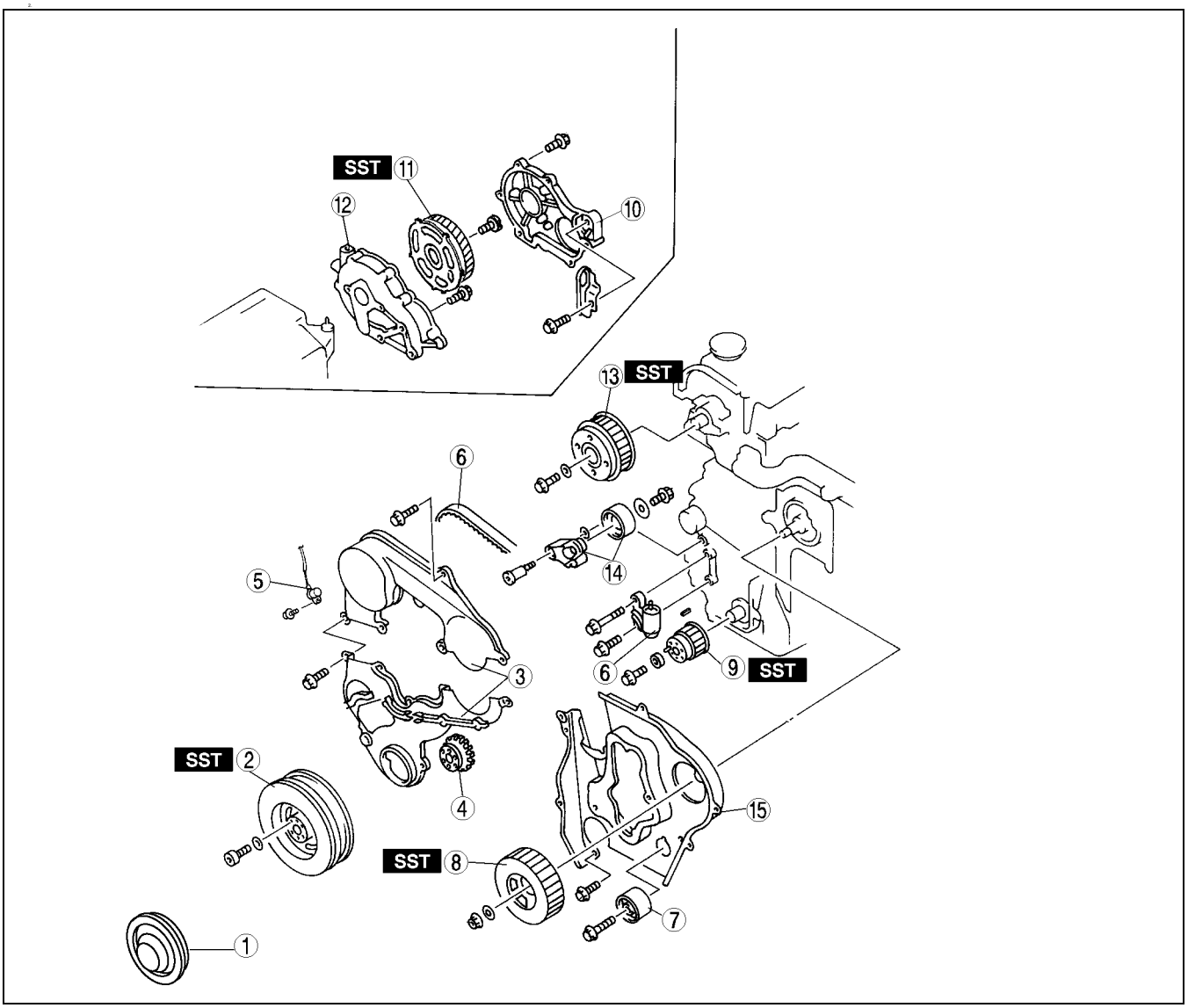

AME2516E001

1	Pulley cover
2	Crankshaft pulley (See B–4 Crankshaft Pulley Disassembly Note)
3	Timing belt cover
4	Guide plate
5	Crankshaft position sensor
6	Timing belt, timing belt auto tensioned (SeeB–4 Timing Belt, Timing Belt Auto Tensioner Disassembly Note)
7	Idler
8	Injection pump pulley (See B–5 Injection Pump Pulley Disassembly Note)

9	Timing belt pulley (See B–5 Timing Belt Pulley Disassembly Note)
10	Gear cover
11	Drive gear (See B–6 Drive Gear Disassembly Note)
12	Gear case
13	Camshaft pulley (See B–6 Camshaft Pulley Disassembly Note)
14	Tensioner
15	Seal plate

Crankshaft Pulley Disassembly Note

1. Hold the crankshaft using the **SST**.
2. Remove the crankshaft pulley lock bolt.

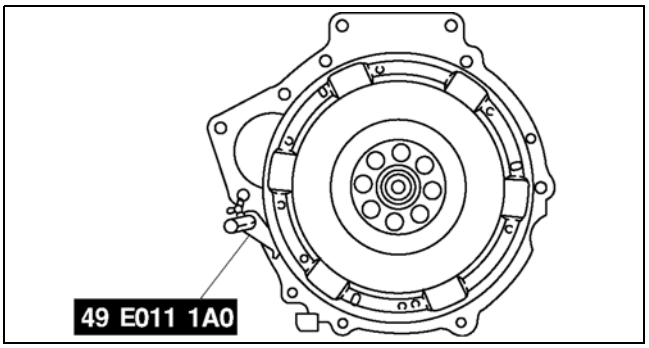

AME2524E066

Timing Belt, Timing Belt Auto Tensioner Disassembly Note

1. Turn the crankshaft clockwise and align the timing marks as shown.

   Caution
   - **The following will damage the belt and shorten its life; forcefully twisting it, turning it inside out, or allowing oil or grease on it.**
   - **After removing the timing belt, do not move the crankshaft or the camshaft pulley or both from this position because it can cause the valve and piston to contact.**

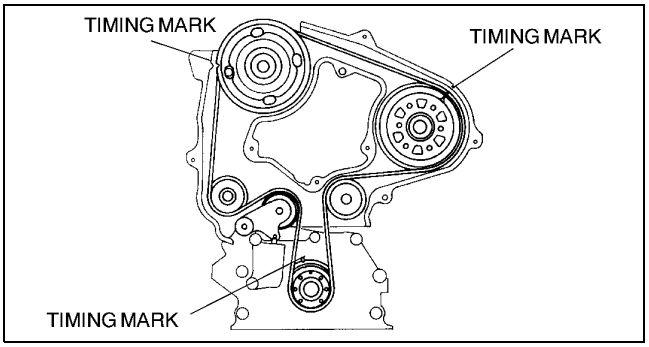

AME2516E002

2. Remove the timing belt auto tensioner.
3. Mark the timing belt rotation on the belt for proper reinstallation.

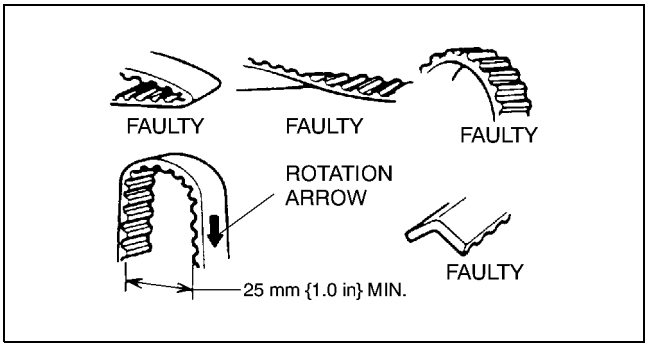

AME2516E003

Injection Pump Pulley Disassembly Note

1. Verify that timing marks are correctly aligned.

Caution

- **To prevent the bolts (M8 × 1.25) from damaging the Injection pump and pulley, do not fully tighten the detent bolt. If it contacts the pulley surface, it will damage the pulley.**

2. Fix the injection pump pulley to the bracket using two injection pump pulley fixing bolts (M8 × 1.25).
3. Loosen the injection pump pulley lock nut.

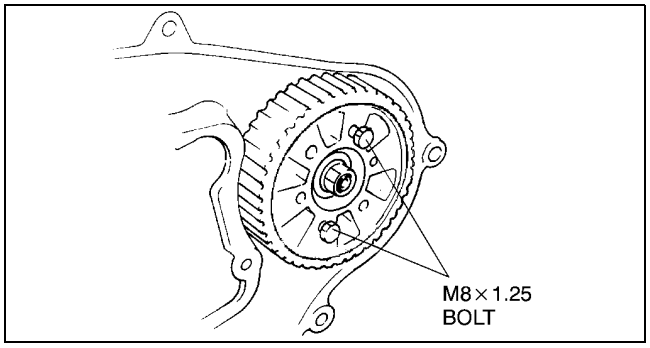

AME2524E005

4. Separate the injection pump pulley from the injection pump shaft using the **SST**.
5. Remove the injection pump pulley fixing bolts (M8 ×1.25).

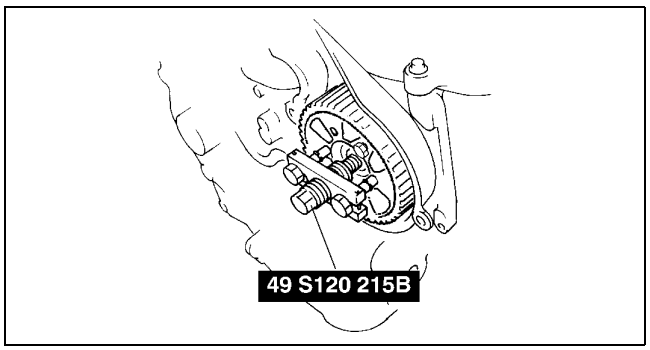

AME2524E006

Timing Belt Pulley Disassembly Note

1. Hold the crankshaft using the **SST**.
2. Remove the timing belt pulley lock bolt.

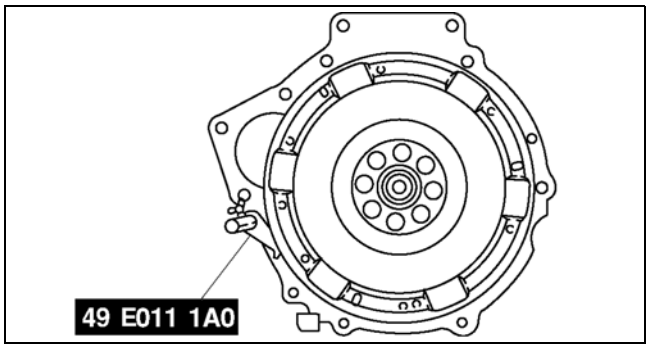

AME2524E066

3. Remove the timing belt pulley using the **SST**.

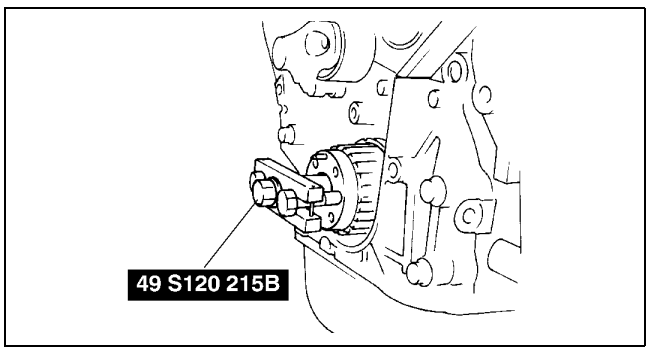

AME2524E007

Drive Gear Disassembly Note

1. Hold the camshaft using the **SST**.
2. Remove the drive gear lock bolt.

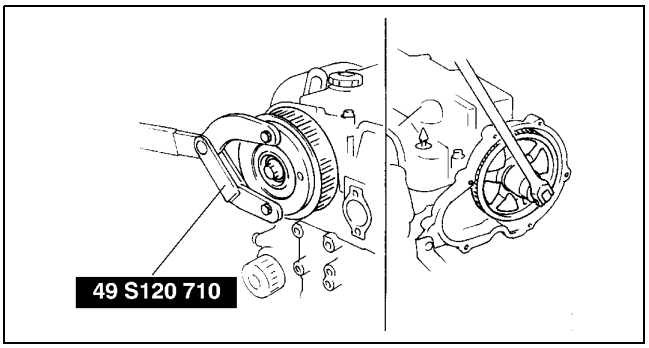

AME2524E008

Camshaft Pulley Disassembly Note

1. Hold the camshaft using the **SST**.
2. Remove the camshaft pulley lock bolt.

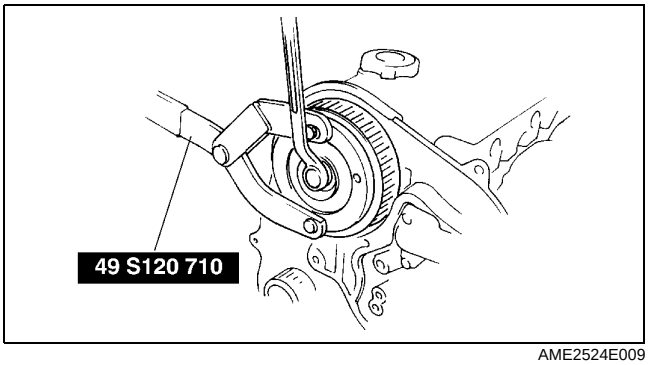

AME2524E009

3. Remove the camshaft pulley using the **SST**.

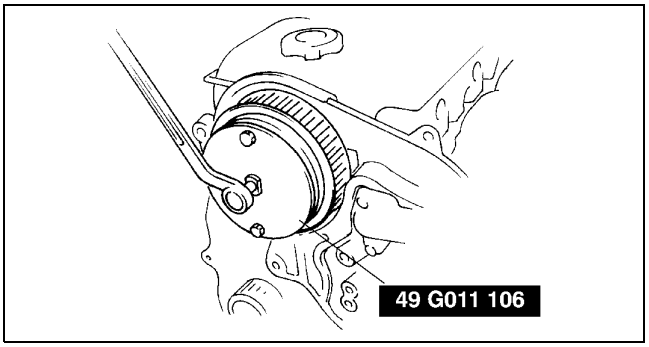

AME2524E010

CYLINDER HEAD (I) DISASSEMBLY

AME222402000104

1. Disassemble in the order indicated in the table.

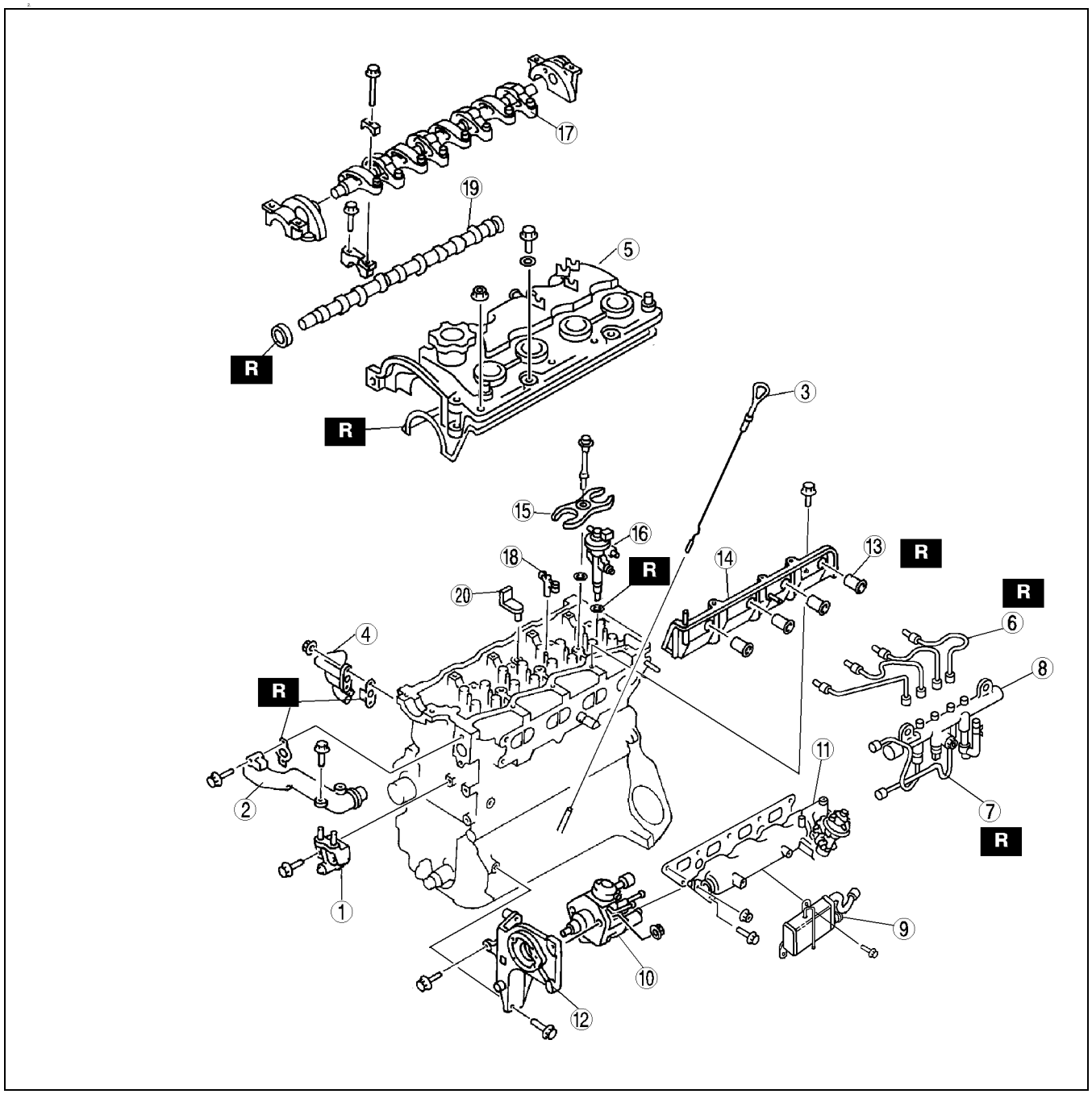

AME2524E014

1	No.3 engine mount bracket
2	Water outlet
3	Dipstick
4	Bypass pipe
5	Cylinder head cover
6	Fuel injection pipe
7	Fuel injection pipe
8	Common rail
9	EGR water cooler
10	Injection pump
11	Intake manifold

12	Injection pump bracket
13	Nozzle seal
14	Side wall
15	Injection nozzle bracket
16	Injection nozzle
17	Rocker arm and rocker arm shaft (See B–8 Rocker Arm and Rocker Arm Shaft Disassembly Note)
18	Rocker bridge
19	Camshaft
20	Breather pipe

Rocker Arm and Rocker Arm Shaft Disassembly Note

1. Inspect the camshaft end play.
   (See B–19 CAMSHAFT END PLAY INSPECTION)
2. Inspect the camshaft oil clearance.
   (See B–19 CAMSHAFT OIL CLEARANCE INSPECTION)
3. Loosen the bolts in two or three steps in the order shown.

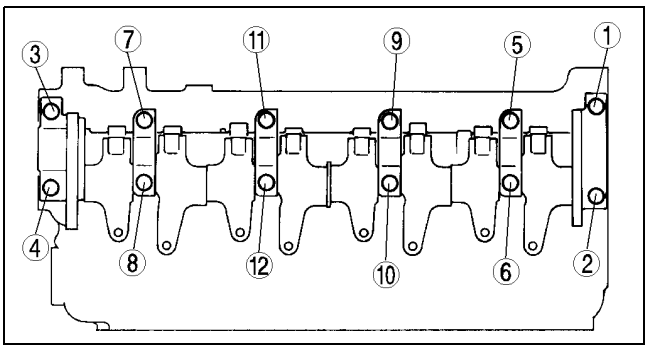

AME2521E001

CYLINDER HEAD (II) DISASSEMBLY

1. Disassemble in the order indicated in the table.

1	Glow plug, glow plug lead (See B–8 Glow Plug, Glow Plug Lead Disassembly Note)
2	Engine coolant temperature sensor
3	Cylinder head (See B–9 Cylinder Head Disassembly Note)
4	Cylinder head gasket
5	Valve keeper (See B–9 Valve Keeper Disassembly Note)
6	Upper valve spring seat
7	Valve spring
8	Lower valve spring seat
9	Valve
10	Valve seal (See B–9 Valve Seal Disassembly Note)

AME222402000115

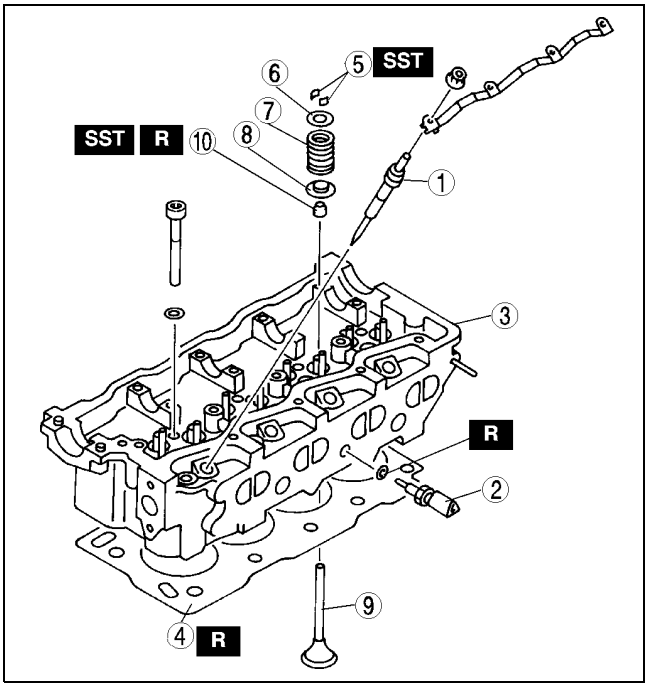

AME2524E019

Glow Plug, Glow Plug Lead Disassembly Note

Caution

- **Damaging heat-generating part of the plug can cause the plug to blow out. Do not use the plug if it is dropped from a height over 10 cm {3.9 in}.**
- **When removing the glow plug, loosen it one or more threads using tool, then further loosen by hand and remove it.**

Cylinder Head Disassembly Note

- Loosen the cylinder head bolts in two or three steps in the order shown.

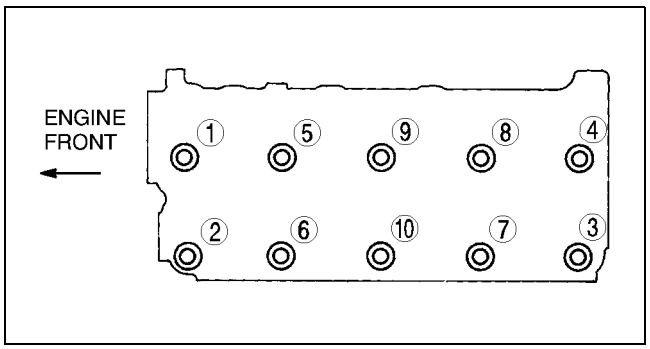

AME2524E020

Valve Keeper Disassembly Note

- Remove the valve keeper using the **SSTs**.

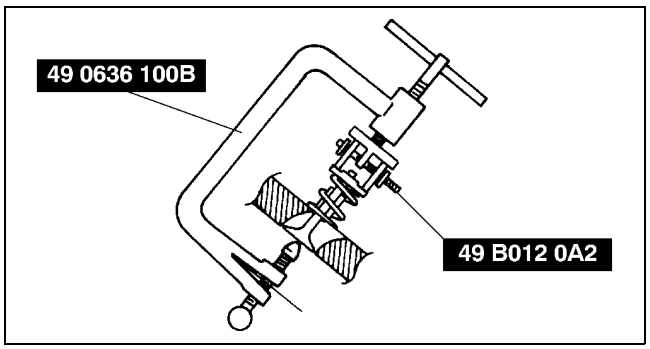

AME2511E001

Valve Seal Disassembly Note

1. Remove the valve seal using the **SST**.

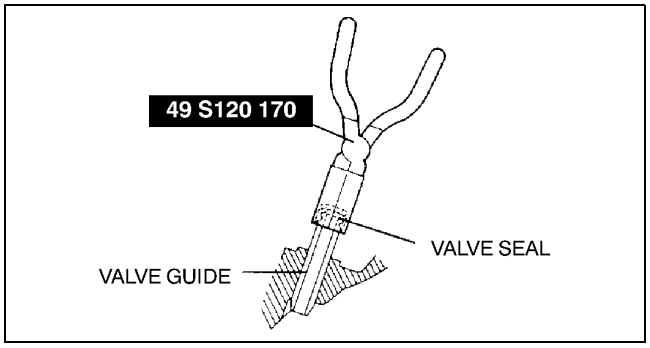

AME2511E002

CYLINDER BLOCK (I) DISASSEMBLY

AME222402000105

1. Disassemble in the order indicated in the table.

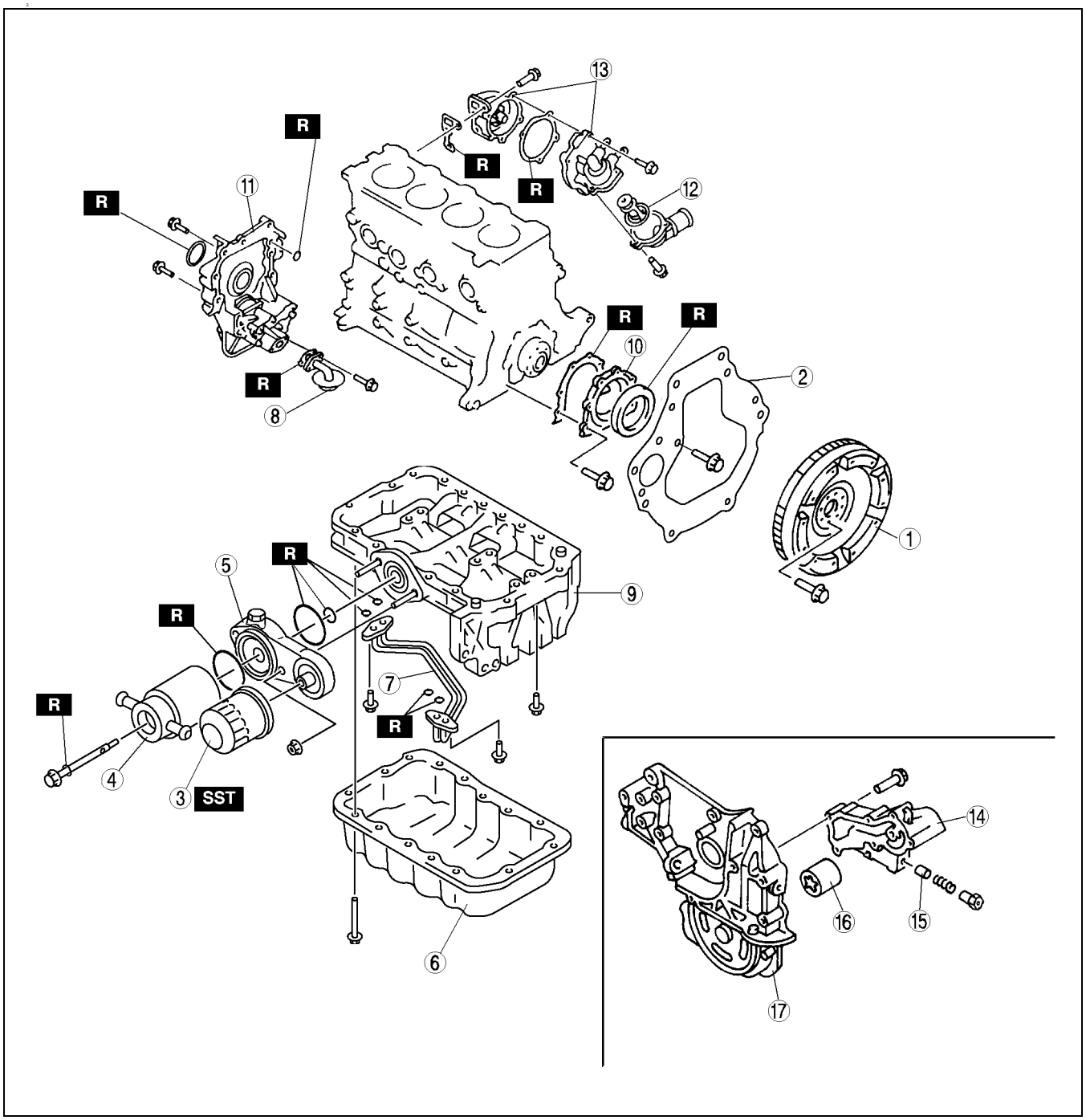

AME2524E174

1	Flywheel (See B–11 Flywheel Disassembly Note)
2	End plate
3	Oil filter
4	Oil cooler
5	Oil filter body
6	Oil pan (See B–11 Oil Pan Disassembly Note)
7	Oil pipe
8	Oil strainer
9	Oil pan upper block (See B–12 Oil Pan Upper Block Disassembly Note)

10	Rear cover (SeeB–12 Rear Cover Disassembly Note)
11	Oil pump (seeB–12 Oil Pump Disassembly Note)
12	Thermostat
13	Water pump
14	Oil pump cover
15	Relief valve
16	Outer roter
17	Oil pump body

Flywheel Disassembly Note

1. Hold the flywheel using the **SST**.
2. Loosen the bolts in two or three steps in the order shown.

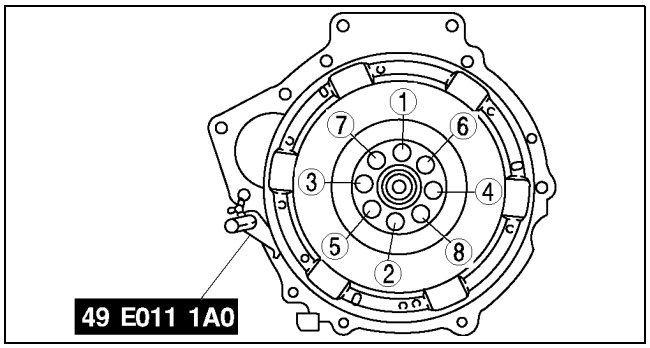

AME2524E072

Oil Pan Disassembly Note

1. Remove the oil pan mounting bolts.
2. Remove the sealant from the bolt threads.
3. Screw an oil pan bolt into the weldnut to make a small gap between the cylinder block and the oil pan.

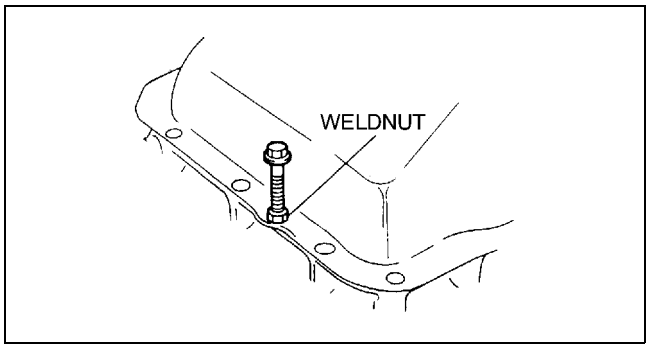

AME2524E024

4. Remove the oil pan using the separator tool.

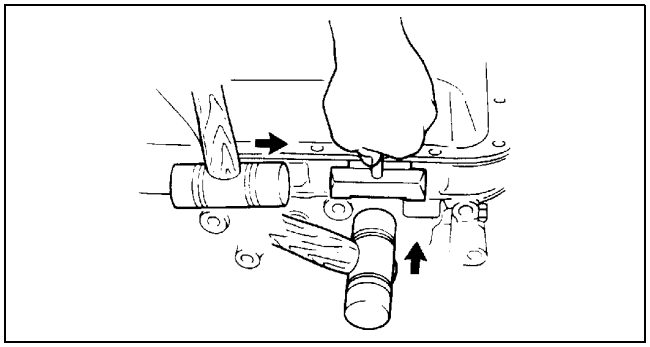

AME2524E025

Oil Pan Upper Block Disassembly Note

1. Loosen the oil pan upper block bolts in two or three steps in the order shown.
2. Remove the oil pan upper block

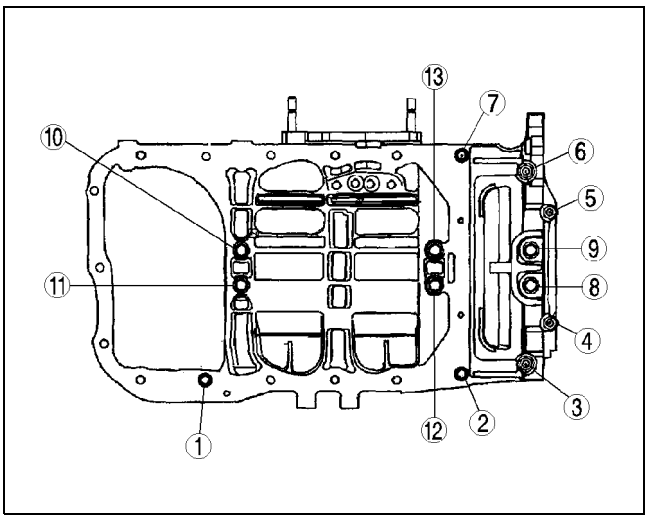

AME2524E078

Rear Cover Disassembly Note

1. Remove the oil seal using a screwdriver protected with a rag.

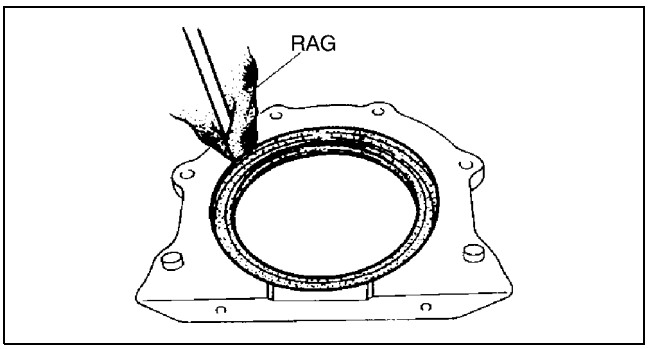

AME2522E001

Oil Pump Disassembly Note

1. Remove the oil seal using a screwdriver protected with a rag.

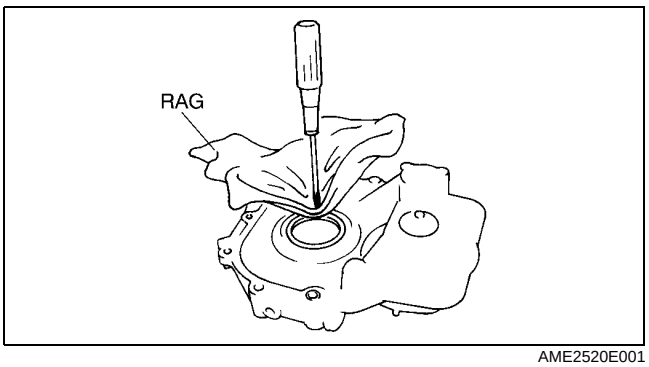

AME2520E001

CYLINDER BLOCK (II) DISASSEMBLY

AME222402000106

1. Disassemble in the order indicated in the table.

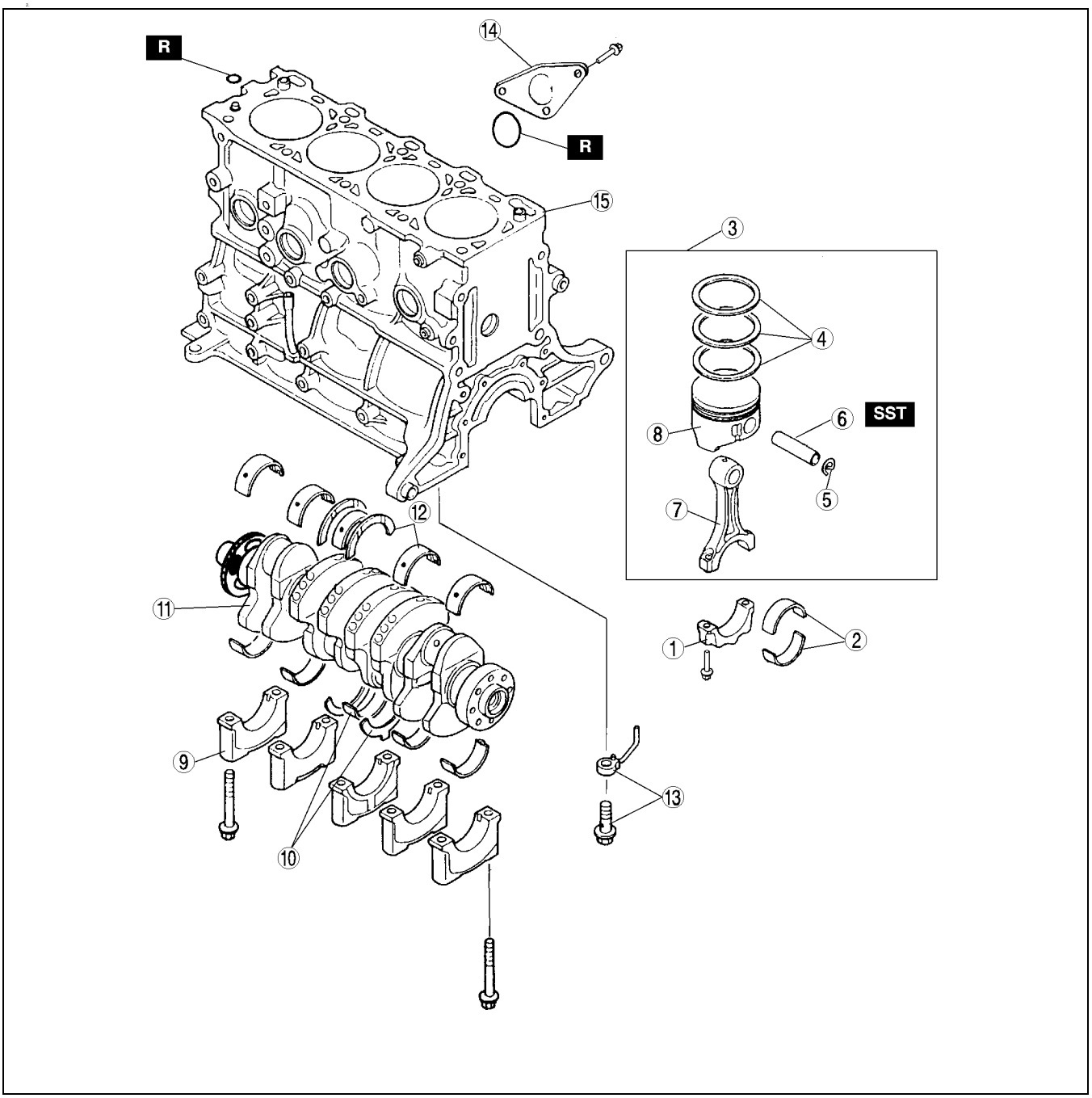

AME2524E035

1	Connecting rod cap (See B–14 Connecting Rod Cap Disassembly Note)
2	Connecting rod bearing
3	Connecting rod, piston (See B–14 Connecting Rod, Piston Disassembly Note)
4	Piston ring
5	Snap ring
6	Piston pin (See B–14 Piston Pin Disassembly Note)
7	Connecting rod

8	Piston
9	Main bearing cap (See B–14 Main Bearing Cap Disassembly Note)
10	Lower main bearing, thrust bearing
11	Crankshaft (See B–14 Crankshaft Disassembly Note)
12	Upper main bearing, thrust bearing
13	Oil jet
14	Cover
15	Cylinder block

Connecting Rod Cap Disassembly Note

1. Inspect the connecting rod side clearance.
   (See B–25 CONNECTING ROD SIDE CLEARANCE INSPECTION)

Connecting Rod, Piston Disassembly Note

1. Before disassembling the connecting rod and piston, remove the carbon on the cylinder wall.
2. Inspect the connecting rod oil clearance.
   (See B–24 CONNECTING ROD OIL CLEARANCE INSPECTION/REPAIR)

Piston Pin Disassembly Note

1. Inspect the oscillation torque.
   (See B–25 PISTON AND CONNECTING ROD INSPECTION)
2. Remove the piston pin using the **SST**.

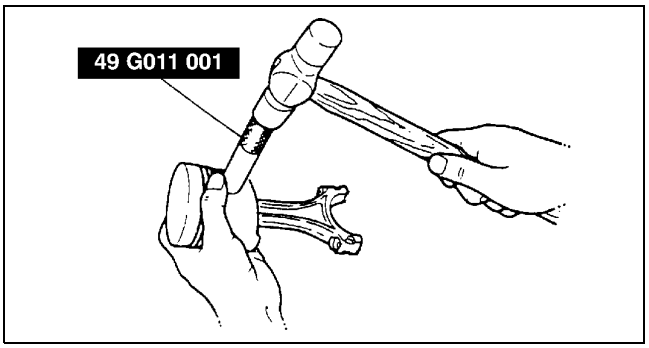

AME2524E034

Main Bearing Cap Disassembly Note

1. Inspect the crankshaft end play.
   (See B–24 CRANKSHAFT END PLAY INSPECTION/REPAIR)
2. Loosen the main bearing cap bolts in two or three steps in the order shown.

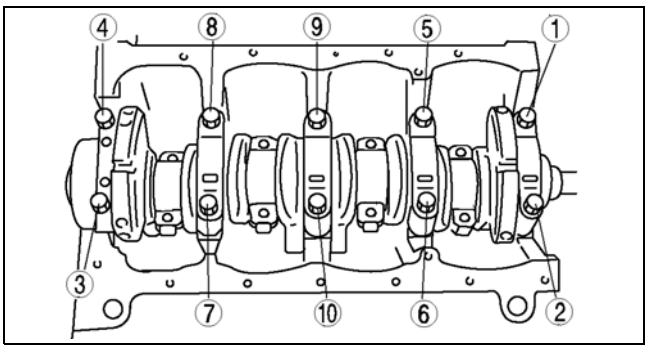

AME2524E068

Crankshaft Disassembly Note

1. Inspect the crankshaft oil clearance.
   (See B–23 CRANKSHAFT OIL CLEARANCE INSPECTION/REPAIR)

CYLINDER HEAD INSPECTION

AME222410100101

1. Carry out color contrast penetrate examination on the cylinder head surface. Replace the cylinder head if necessary.
2. Inspect for the following and repair or replace if necessary.
   (1) Sunken valve seats
   (2) Excessive camshaft oil clearance and end play

3. Measure the cylinder head for distortion in the seven directions as shown.

   Maximum distortion
   X distortion: 0.01 mm {0.0004 in}
   Y distortion: 0.04 mm {0.0016 in}

4. If the cylinder head distortion exceeds the maximum, replace the cylinder head. Do not attempt to repair the cylinder head by milling or grinding.

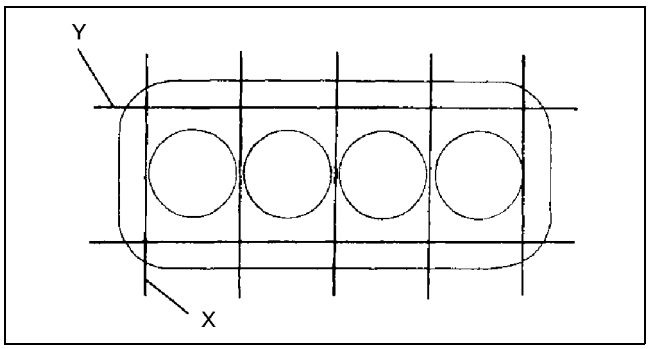

AME2524E038

5. Measure the manifold contact surface distortion as shown.

   Maximum distortion
   0.06 mm {0.0024 in}

6. If the distortion exceeds the maximum, grind the surface or replace the cylinder head.

   Maximum grinding
   0.20 mm {0.008 in}

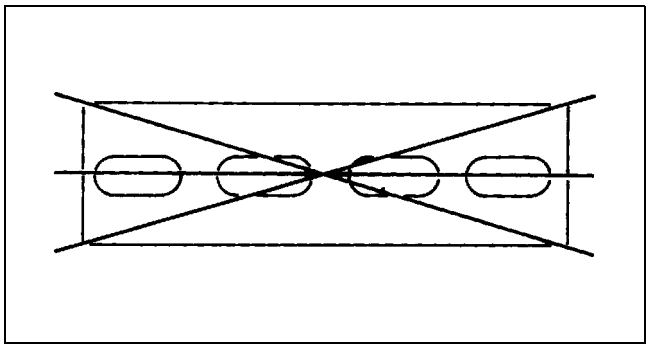
AME2524E039

VALVE, VALVE GUIDE INSPECTION

AME222412111101

1. Measure the valve head margin thickness of each valve. Replace the valve if necessary.

   Minimum margin thickness
   IN: 0.8 mm {0.0315 in}
   EX: 1.0 mm {0.0394 in}

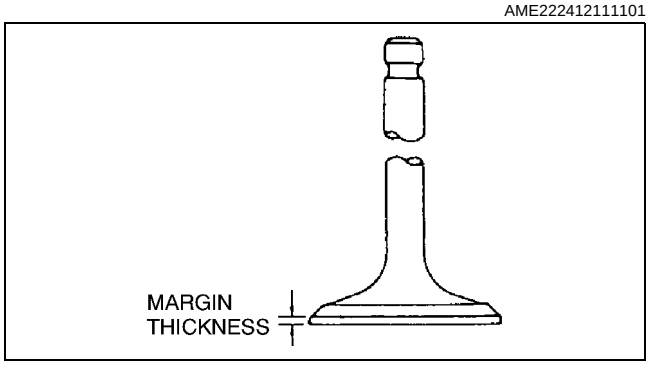

AME2511E005

2. Measure the length of each valve. Replace the valve if necessary.

   Standard length
   IN: 115.01—115.51 mm {4.528—4.547 in}
   EX: 114.35—114.85 mm {4.502—4.521 in}

   Minimum length
   IN: 114.785 mm {4.519 in}
   EX: 114.125 mm {4.493 in}

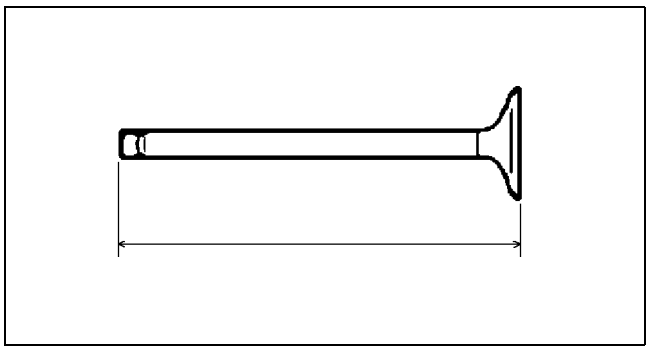
AMJ2224E071

3. Measure the stem diameter of each valve in X and Y directions at the three points (A, B, and C) shown. Replace the valve if necessary.

   Standard diameter
   IN: 5.970—5.985 mm {0.2351—0.2356 in}
   EX: 5.965—5.980 mm {0.2349—0.2354 in}

   Minimum diameter
   IN: 5.920 mm {0.2331 in}
   EX: 5.915 mm {0.2329 in}

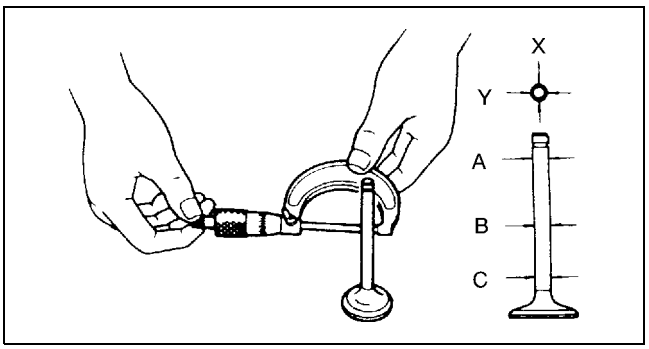

AME2511E006

4. Measure the inner diameter of each valve guide in X and Y directions at the three points (A, B, and C) shown. Replace the valve guide if necessary.

   Standard inner diameter
   6.030—6.050 mm {0.2374—0.2381 in}

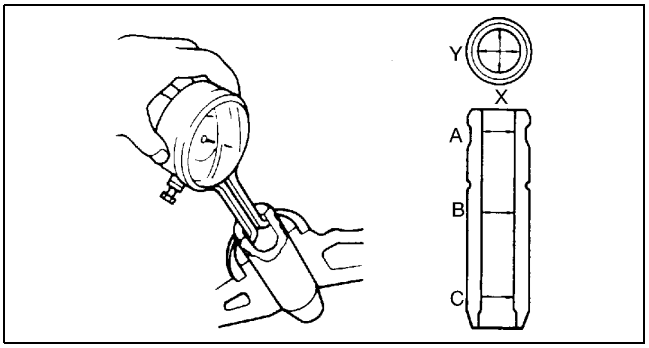

AME2511E007

5. Measure the protrusion height (dimension A) of each valve guide without lower valve spring seat. Replace the valve guide if necessary.

   Standard height
   IN: 18.7—19.2 mm {0.737—0.755 in}
   EX: 17.6—18.1 mm {0.693—0.712 in}

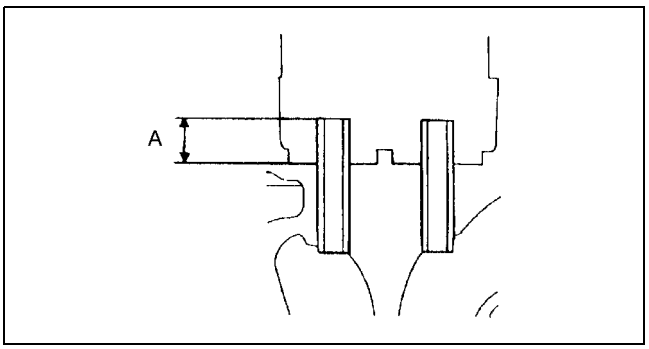

AME2511E008

VALVE GUIDE REPLACEMENT

AME222410280102

Valve Guide Removal

1. Remove the valve guide from the combustion chamber side using the **SST**.

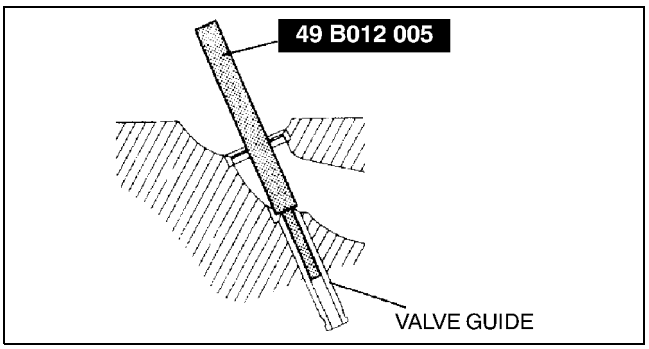

AME2511E009

Valve Guide Installation

1. Assemble the **SSTs** so that depth L is as specified.

   Depth L
   IN: 18.7—19.2 mm {0.737—0.755 in}
   EX: 17.6—18.1 mm {0.693—0.712 in}

2. Tap the valve guide in from the side opposite the combustion chamber until the **SSTs** contacts the cylinder head.

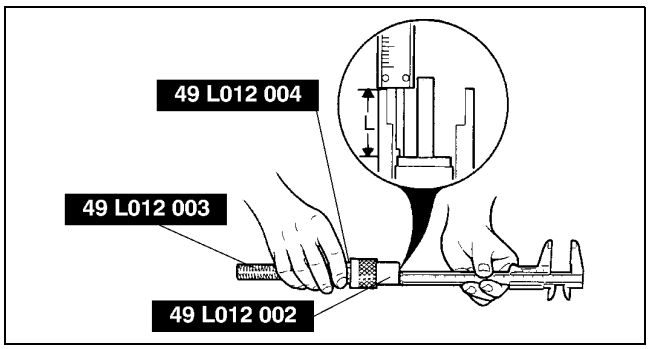

AME2511E010

3. Verify that the valve guide projection height is within the specification.

   Standard height
   IN: 18.7—19.2 mm {0.737—0.755 in}
   EX: 17.6—18.1 mm {0.693—0.712 in}

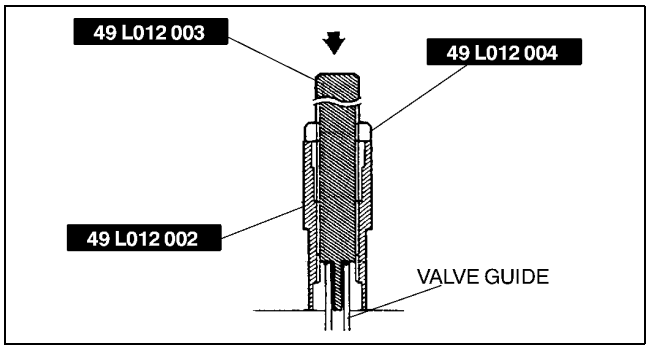

AME2511E011

VALVE SEAT INSPECTION/REPAIR

AME222410102102

1. Measure the seat contact width. If necessary, resurface the valve seat using a 45° valve seat cutter or resurface the valve face or both.

   Standard width
   IN: 1.3—1.9 mm {0.052—0.074 in}
   EX: 1.3—1.9 mm {0.052—0.074 in}

2. Verify that the valve seating position is at the center of the valve face.
   (1) If the seating position is too high, correct the valve seat using a **65°** (IN) or **75°** (EX) cutter, and a **45°** cutter.
   (2) If the seating position is too low, correct the valve seat using a **30°** cutter, and a **45°** cutter.

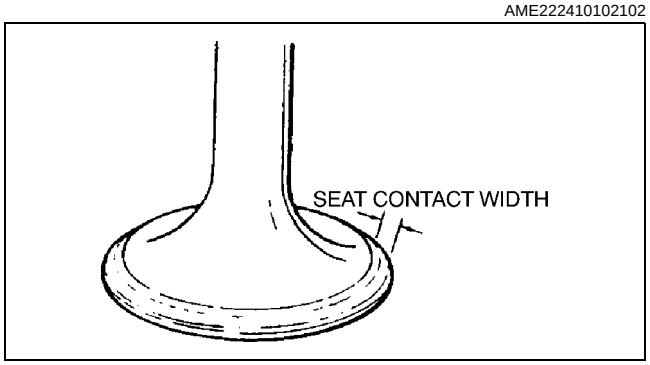

AME2511E012

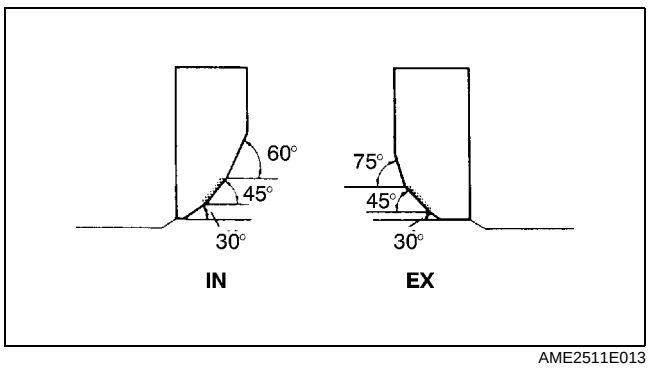

AME2511E013

3. Measure the receded amount from the cylinder head surface. If it exceeds the maximum, replace the cylinder head.

   Standard recession
   IN: 0.42—0.90 mm {0.017—0.035 in}
   EX: 0.46—0.94 mm {0.019—0.037 in}

   Maximum recession
   IN: 1.25 mm {0.049 in}
   EX: 1.29 mm {0.051 in}

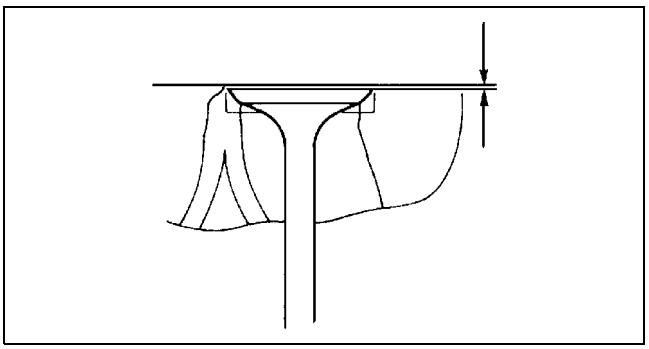

AME2511E014

VALVE SPRING INSPECTION

AME222412125101

1. Apply pressure to the pressure spring and check the spring height. Replace the valve spring if necessary.

   Pressing force
   172.1—194.9 N {17.55—19.87 kgf, 38.61—43.79 lbf}

   Standard height
   38.0 mm {1.50 in}

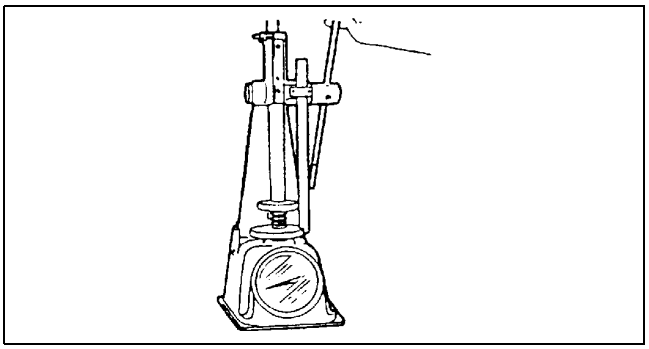

AME2511E015

2. Measure the out-of-square of the valve spring. Replace the valve spring if necessary.

   Maximum valve spring out-of-square
   1.55mm {0.061 in}

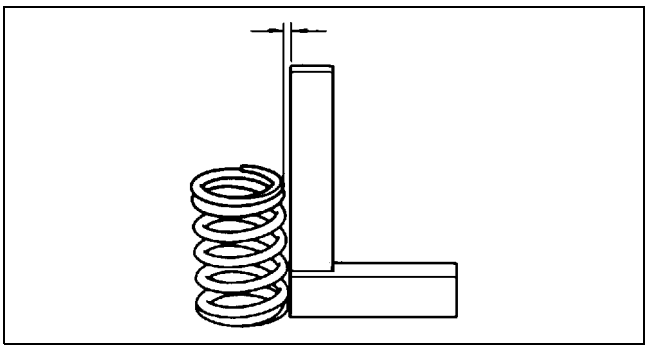

AME2511E016

CAMSHAFT INSPECTION

AME222412420102

1. Set No.1 and No.6 journals on V-blocks. Measure the camshaft runout. Replace the camshaft if necessary.

   Maximum runout
   0.03 mm {0.0012 in}

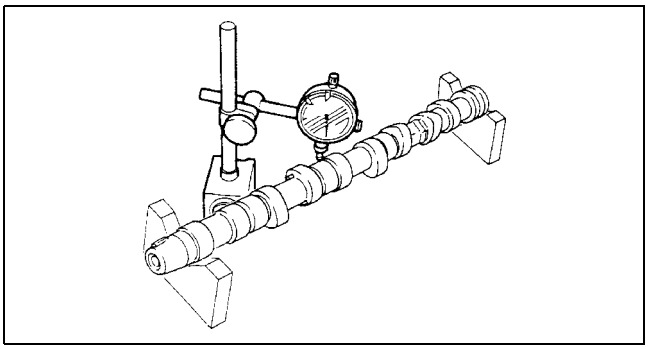

AME2517E001

2. Measure the cam lobe height at the two points as shown. Replace the camshaft if necessary.

   Standard height
   IN: 40.140 mm {1.5803 in}
   EX: 39.809 mm {1.5673 in}

   Minimum height
   IN: 39.940 mm {1.5724 in}
   EX: 39.609 mm {1.5594 in}

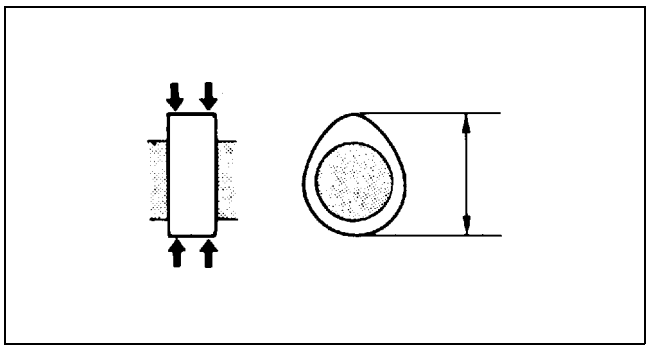

AME2517E002

3. Measure the journal diameters in X and Y directions at the two points (A and B) as shown. Replace the camshaft if necessary.

   Standard diameter
   31.950—31.975 mm {1.2579—1.2588 in}

   Minimum diameter
   31.920 mm {1.2567 in}

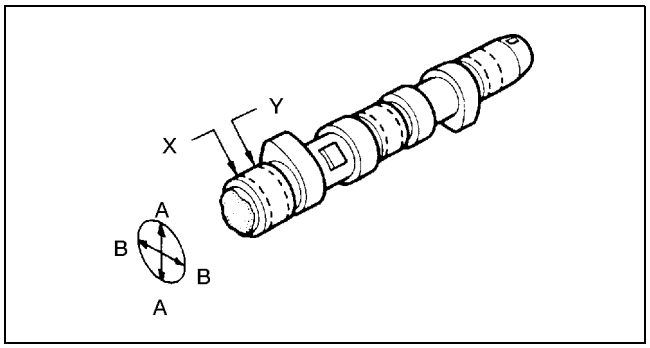

AME2517E003

CAMSHAFT OIL CLEARANCE INSPECTION

AME222412420103

1. Position plastigage atop the journals in the axial direction.
2. Install the camshaft cap and rocker arm shaft. (See B–40 Rocker Arm and Rocker Arm Shaft Assembly Note)
3. Remove the camshaft cap and rocker arm shaft. (See B–8 Rocker Arm and Rocker Arm Shaft Disassembly Note)
4. Measure the oil clearance. Replace the cylinder head if necessary.

   Standard clearance
   0.025—0.030 mm {0.0010—0.0011 in}

   Maximum clearance
   0.075 mm {0.0030 in}

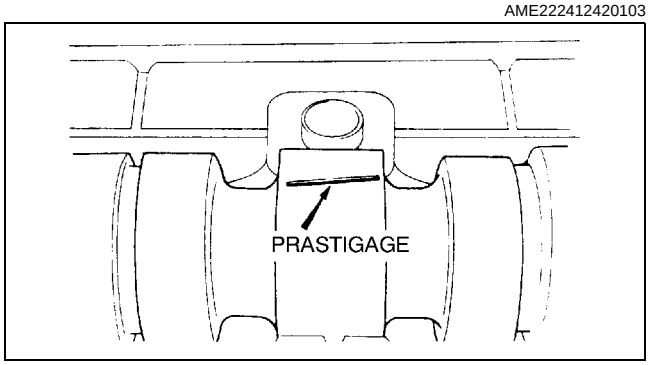

AME2517E004

CAMSHAFT END PLAY INSPECTION

AME222412420104

1. Install the camshaft cap and rocker arm shaft. (See B–40 Rocker Arm and Rocker Arm Shaft Assembly Note)

   Standard end play
   0.03—0.16 mm {0.0012—0.0062 in}

   Maximum end play
   0.20 mm {0.0079 in}

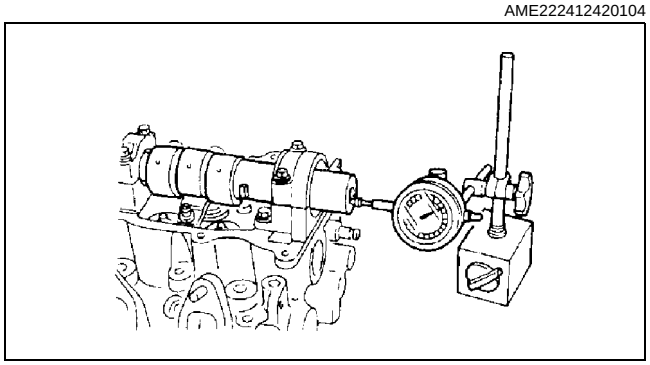

AME2517E005

2. Measure the camshaft end play. Replace the cylinder head or camshaft if necessary.
3. Remove the camshaft cap and rocker arm shaft. (See B–8 Rocker Arm and Rocker Arm Shaft Disassembly Note)

CYLINDER BLOCK INSPECTION/REPAIR

AME222410300102

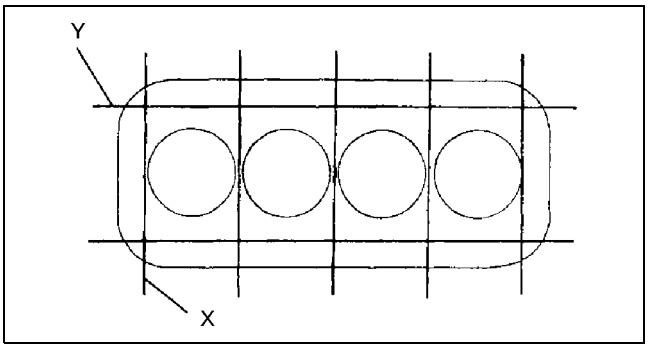

AME2524E038

1. Measure the distortion of the cylinder block top surface in the seven directions as shown. Replace in necessary.

   Maximum cylinder block distortion
   X direction 0.01 mm {0.0004 in}
   Y direction 0.03 mm {0.0012 in}

2. Measure the cylinder bores in X and Y directions at three levels (A,B and C) in each cylinder as shown.
3. If the cylinder bore exceeds the wear limit, replace the cylinder block or rebore the cylinder and install the oversize pistons so that the specified piston-to-cylinder clearance is obtained.

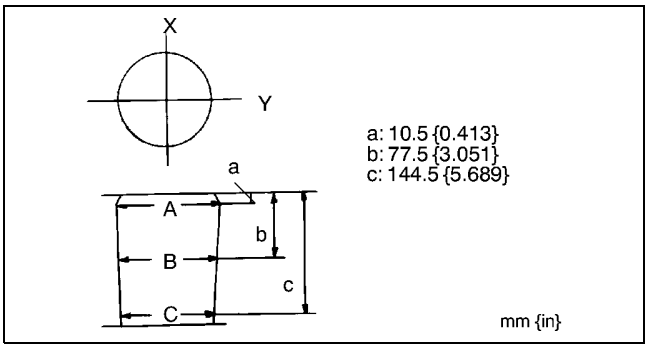

AME2524E040

Note
- Base the boring diameter on the diameter of an oversize piston. All cylinders must have the same diameter.

Cylinder bore

(mm {in})

Size	Diameter
Standard	86.000—86.022 {3.3859—3.3866}
0.25 {0.01} oversize	86.250—86.272 {3.3957—3.3965}
0.50 {0.02} oversize	86.500—86.522 {3.4055—3.4063}

Wear limit
0.15 mm {0.006 in}

OIL JET VALVE, NOZZLE INSPECTION

AME222410730101

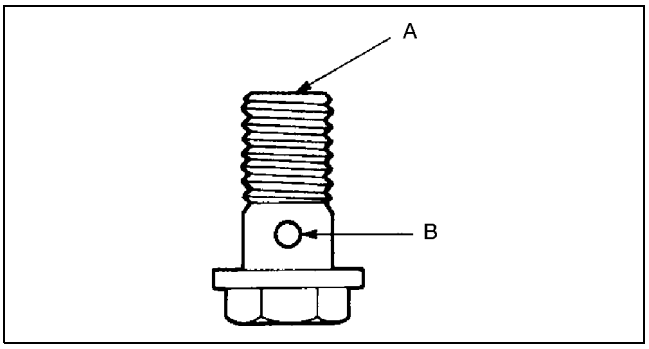

AME2524E041

1. Apply compressed air to oil jet valve port A and verify that air passes through oil jet valve port B. If not, replace the oil jet valve.

   Air pressure
   138—196 kpa {1.4—2.0 kgf/cm^2, 20—28 psi}

2. Inspect the oil jet nozzle for clogging. Replace the nozzle if necessary.

PISTON INSPECTION

AME222411010102

- Measure the outer diameter of each piston at right angle (**90°**) to the piston pin, **10.0 mm {0.39 in}** above the bottom of piston.

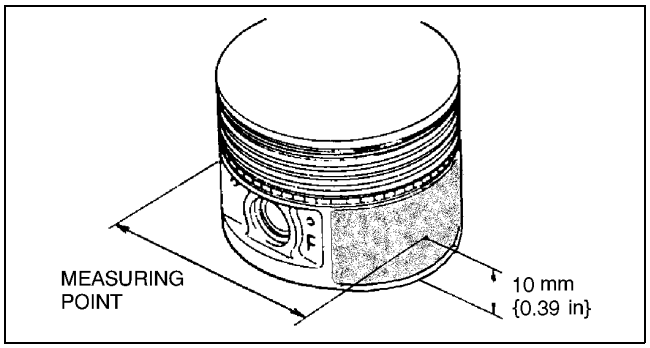

AME2524E042

Piston diameter

mm {in}

Size	Diameter
Standard	85.973—86.015 {3.3848—3.3864}
0.25 {0.01} oversize	86.223—86.265 {3.3946—3.3962}
0.50 {0.02} oversize	86.473—86.515 {3.4045—3.4061}

PISTON CLEARANCE INSPECTION/REPAIR

AME222411010103

1. Measure the piston-to-cylinder clearance.
   Replace the piston or rebore the cylinders to fit oversize piston if necessary.

   Standard clearance
   0—0.034 mm {0—0.0013 in}

   Maximum clearance
   0.10 mm {0.0039 in}

2. If the piston is replaced, the piston rings must also be replaced.

PISTON RING CLEARANCE INSPECTION

AME222411010104

1. Measure the piston ring-to-ring gloove clearance around the entire circumference. Replace the piston and piston ring if necessary.

   Standard clearance
   Top: 0.05—0.09 mm {0.0020—0.0035 in}
   Second: 0.04—0.08mm {0.0016—0.0031 in}
   Oil: 0.03—0.07mm {0.0012—0.0027 in}

   Maximum clearance
   0.15 mm {0.0059 in}

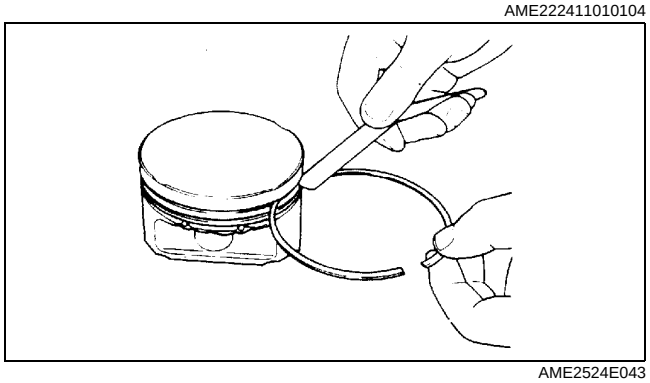

AME2524E043

2. Insert the piston ring into the cylinder by hand and use the piston to push it to the bottom of the ring travel.
3. Measure each piston ring end gap using a feeler gauge. Replace the piston ring if necessary.

   Standard end gap
   Top: 0.20—0.30 mm {0.008—0.011 in}
   Second: 0.20—0.30 mm {0.008—0.011 in}
   Oil rail: 0.20—0.30 mm {0.008—0.011 in}

   Maximum end gap
   1.0 mm {0.039 in}

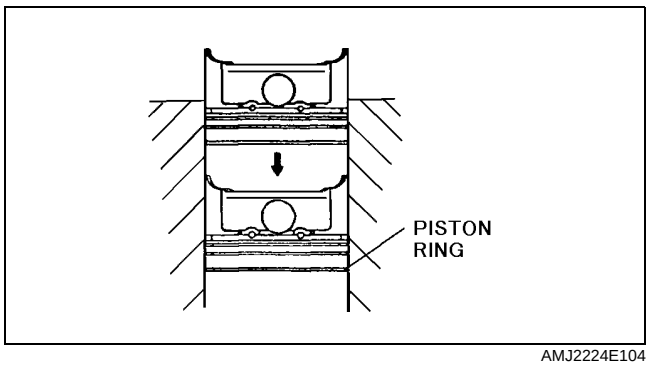

AMJ2224E104

PISTON PIN CLEARANCE INSPECTION

AME222411010105

1. Measure each piston pin hole diameter in X and Y directions at the four points (A, B, C, and D) as shown.

   Standard diameter
   29.997—30.007 mm {1.1810—1.1813 in}

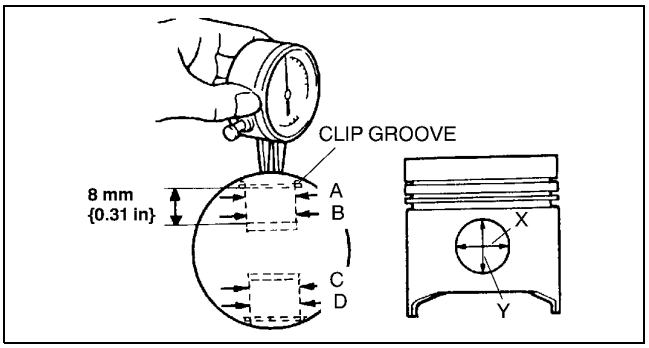

AME2524E044

2. Measure each connecting rod small end inner diameter in X and Y directions as shown.

   Standard diameter
   30.014—30.030 mm {1.1817—1.1822 in}

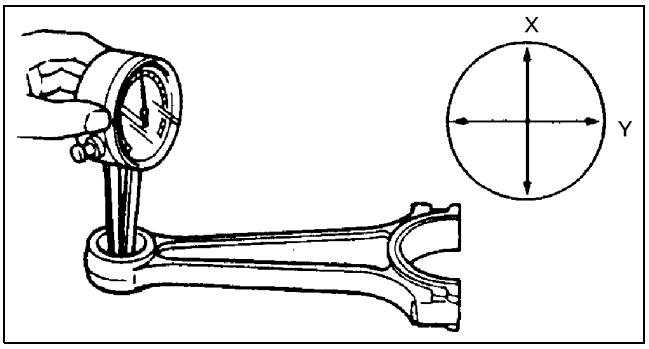

AME2524E045

3. Measure each piston pin diameter in X and Y directions at the four points (A, B, C, and D) as shown.

   Standard diameter
   29.994—30.000 mm {1.1809—1.1811 in}

4. Calculate the piston pin-to-piston pin bore clearance. Replace the piston or piston pin or both if necessary.

   Standard clearance
   - 0.003—0.013 mm {-0.00011—0.00051 in}

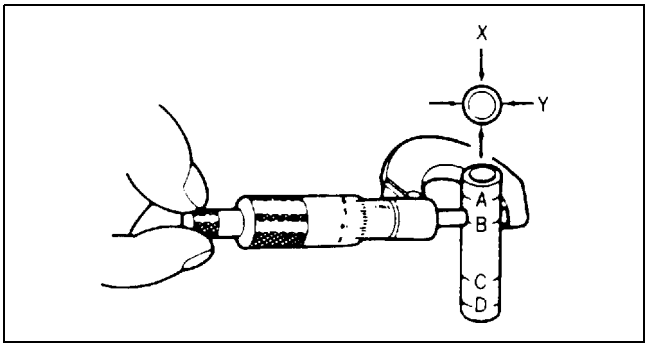

AME2524E046

5. Calculate the clearance between connecting rod small end and piston pin. Replace the connecting rod or piston pin if necessary.

   Standard clearance
   0.014—0.036 mm {0.00056—0.00141 in}

CRANKSHAFT INSPECTION

AME222411301101

1. Measure the crankshaft runout. Replace the crankshaft if necessary.

   Maximum runout
   0.03 mm {0.001 in}

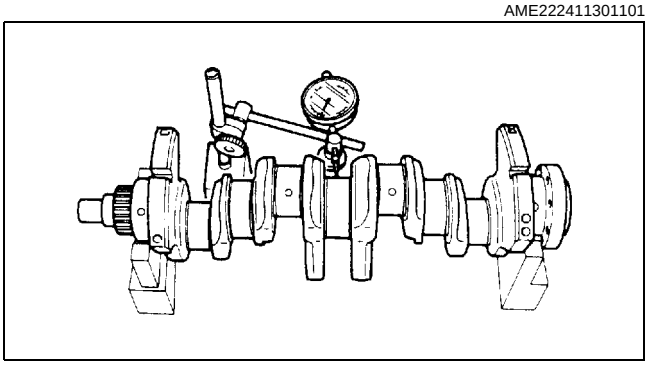

AME2524E047

2. Measure the journal diameter in X and Y direction at the two points (A and B) as shown. Replace the crankshaft or grind the journal, and install the undersize bearing if necessary.

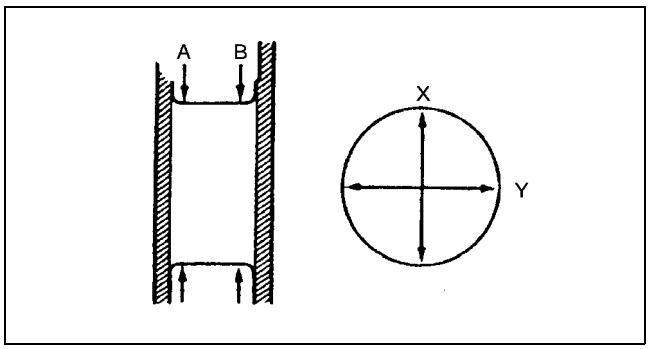

AMJ2224E036

Main Journal

(mm {in})

Bearing size	Diameter
Standard	59.937—59.955 {2.3598—2.3604}
0.25 {0.01} undersize	59.687—59.705 {2.3499—2.3505}
0.50 {0.02} undersize	59.437—59.455 {2.3401—2.3407}
0.75 {0.03} undersize	59.187—59.205 {2.3302—2.3309}

Out-of-round
0.03 mm {0.001 in} max.

Crank pin

(mm {in})

Bearing size	Diameter
Standard	50.940—50.955 {2.0056—2.0060}
0.25 {0.01} undersize	50.690—50.705 {1.9957—1.9962}
0.50 {0.02} undersize	50.440—50.455 {1.9859—1.9864}
0.75 {0.03} undersize	50.190—50.205 {1.9760—1.9765}

Out-of-round
0.03 mm {0.001 in} max.

CRANKSHAFT OIL CLEARANCE INSPECTION/REPAIR

AME222411301102

1. Position a plastigage above the journals in the axial direction.
2. Install the main bearing cap. (See B–31 Main Bearing Cap Assembly Note)
3. Remove the main bearing cap. (See B–14 Main Bearing Cap Disassembly Note)
4. Measure the main journal oil clearance. If the clearance exceeds the maximum, replace the main bearing or grind the main journal, and install the undersize bearings so that the specified oil clearance is obtained.

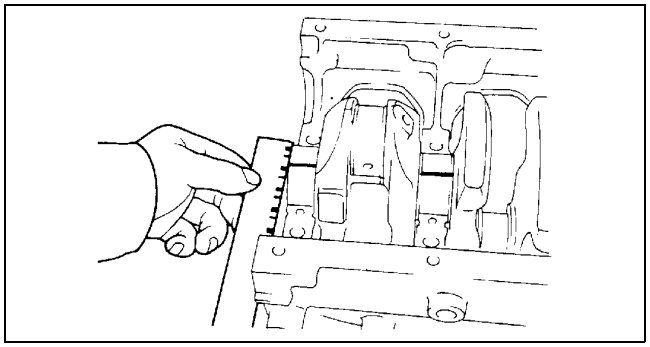
AME2524E049

Standard clearance
0.025—0.044 mm {0.0010—0.0017 in}

Maximum clearance
0.08 mm {0.003 in}

(mm {in})

Bearing size	Bearing thickness
Standard	2.007—2.022 {0.0791—0.0796}
0.25 {0.01} oversize	2.129—2.139 {0.0839—0.0842}
0.50 {0.02} oversize	2.254—2.264 {0.0888—0.0891}
0.75 {0.03} oversize	2.379—2.389 {0.0937—0.0940}

CRANKSHAFT END PLAY INSPECTION/REPAIR

AME222411301103

1. Install the main bearing cap. (See B–31 Main Bearing Cap Assembly Note)
2. Measure the crankshaft end play. If the end play exceeds the maximum, replace the thrust bearing or grind the crankshaft, and install an undersize bearing so that the specified end play is obtained.

   Standard end play
   0.040—0.282 mm {0.00158—0.01110 in}

   Maximum end play
   0.30 mm {0.012 in}

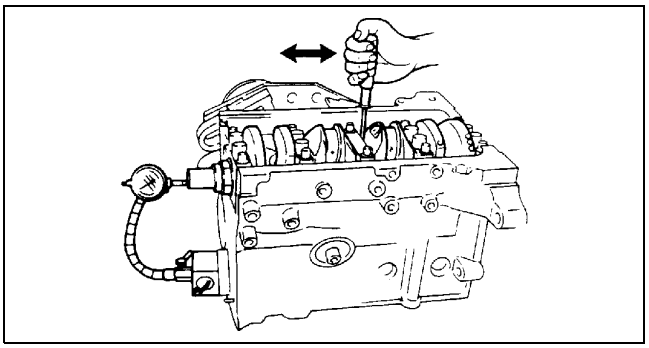

AME2524E050

(mm {in})

Bearing size	Bearing thickness
Standard	2.00—2.05 {0.0788—0.0807}
0.35 {0.01} oversize	2.175—2.225 {0.0857—0.0876}

3. Remove the main bearing cap. (See B–14 Main Bearing Cap Disassembly Note)

CONNECTING ROD INSPECTION

AME222411211101

- Measure bending and distortion for each connecting rod. Replace the connecting rod if necessary.

  Bending
  0.080 mm {0.0031 in} max. /50 mm {2.0 in}

  Distortion
  0.080 mm {0.0031 in} max. /50 mm {2.0 in}

  Center-to-center distance
  151.95—152.05 mm {5.983—5.986 in}

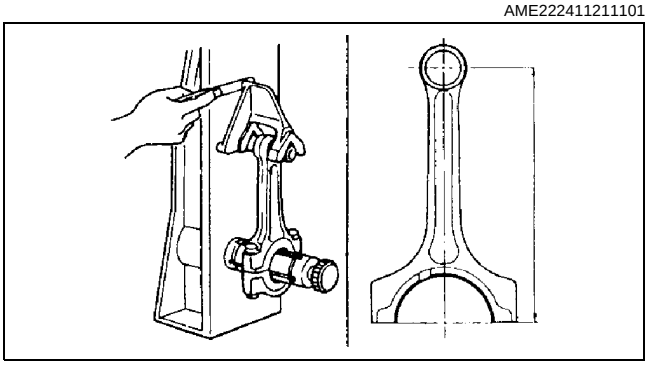

AME2524E051

CONNECTING ROD OIL CLEARANCE INSPECTION/REPAIR

AME222411211102

1. Position a plastigage above the journals in the axial direction.
2. Install the connecting rod cap. (See B–32 Connecting Rod Cap Assembly Note)
3. Remove the connecting rod cap.
4. Measure the crankpin oil clearance. If the clearance exceeds the maximum, replace the connecting rod bearing or grind the crankpin and use undersize bearings so that the specified clearance is obtained.

   Standard clearance
   0.027—0.055 mm {0.0011—0.0021in}

   Maximum clearance
   0.10 mm {0.0039 in}

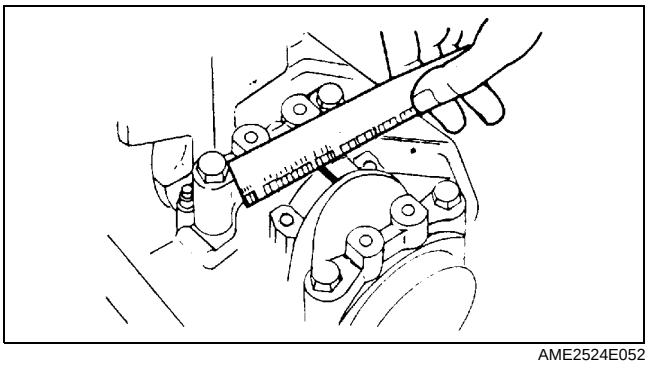

AME2524E052

(mm {in})

Bearing size	Bearing thickness
Standard	1.506—1.515{0.0593—0.0596}
0.25 {0.01} oversize	1.630—1.640{0.0642—0.0645}
0.50 {0.02} oversize	1.755—1.765{0.0691—0.0694}
0.75 {0.03} oversize	1.880—1.890{0.0741—0.0744}

CONNECTING ROD SIDE CLEARANCE INSPECTION

AME222411211103

1. Install the connecting rod cap. (See B–32 Connecting Rod Cap Assembly Note)
2. Measure the connecting rod large end side clearance. Replace the connecting rod and cap if necessary.

   Standard clearance
   0.110—0.262 mm {0.0044—0.0103 in}

   Maximum clearance
   0.512 mm {0.0202 in}

3. Remove the connecting rod cap.

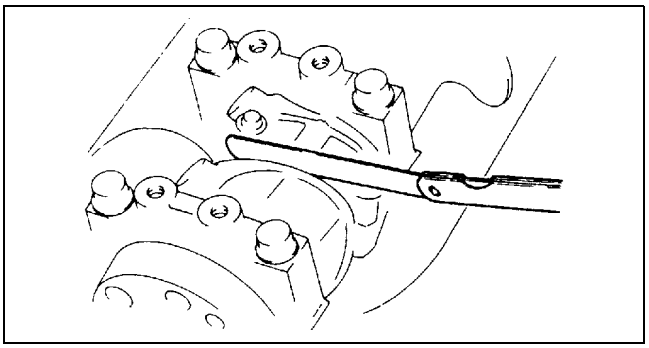

AME2524E053

PISTON AND CONNECTING ROD INSPECTION

AME222411010106

- Insert the oscillation torque as shown.
  If the large end does not drop by its own weight, replace the piston or the piston pin.

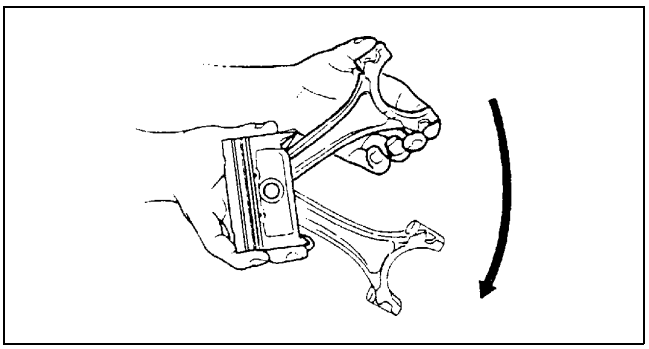

AME2524E054

CYLINDER HEAD BOLT INSPECTION

AME222410100102

- Measure the length of each connecting rod bolt. Replace if necessary.

  Maximum length
  161.0 mm {6.338 in}

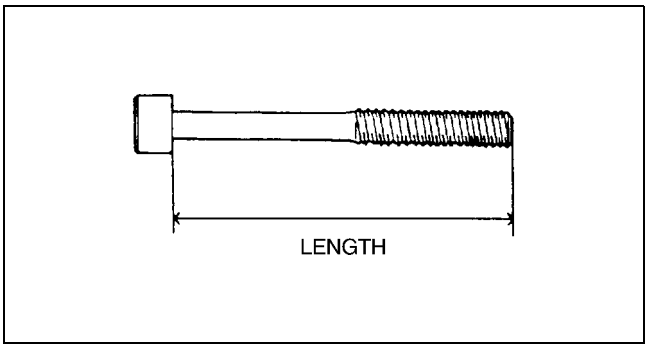

AME2524E055

TIMING BELT AUTO TENSIONER INSPECTION

AME222412711102

1. Measure the tensioner rod projection length.
2. Inspect the auto tensioner for oil leakage.
   Replace the auto tensioner if necessary.

   Projection (Free length)
   12.9—14.6 mm {0.508—0.574 in}

3. Inspect for the resistance of the auto tensioner rod, when it is pushed with a force of approximately **235 N {24 kgf, 53 lbf}**.
   If there is no resistance on the tensioner rod is not resistance and it moves slightly, perform the following procedure.

   Caution
   - **To prevent damage to the inside of the auto tensioner, do not press down the auto tensioner rod with a force greater than the specified 235 N {24 kgf, 53 lbf}. Be careful that the rod does not touch the bottom.**

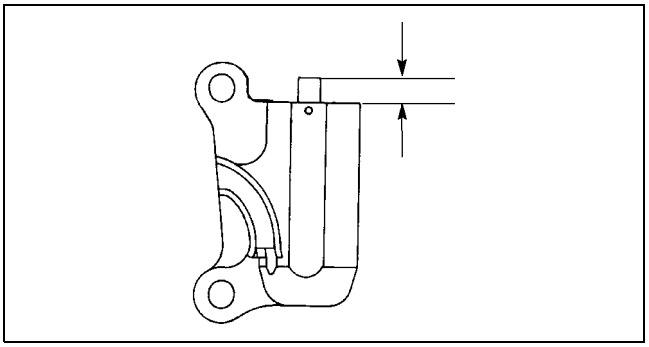

AME2524E056

   (1) Push it down slowly two or three times to the bottom end of the end.
   (2) When the rod protrudes approximately **8.1 mm {0.32 in}**, verify that the resistance is restored on the tensioner rod.
   If the resistance is not restored, replace the auto tensioner.

PILOT BEARING INSPECTION

AME222411501101

- Verify that the pilot bearing rotates smoothly without any abnormal noise. Replace if necessary.

Replacement

1. Remove the pilot bearing from the crankshaft using the **SST**.

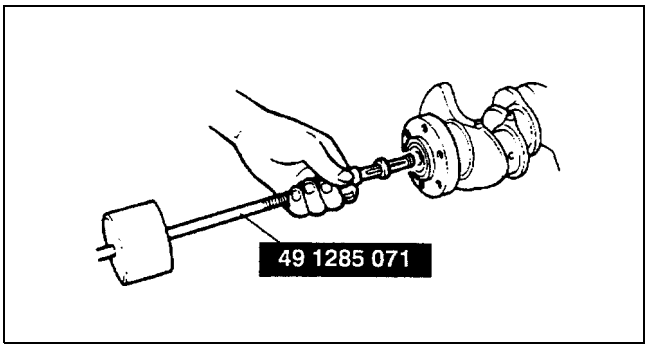

AME2524E080

2. Install the pilot bearing using the **SSTs**.

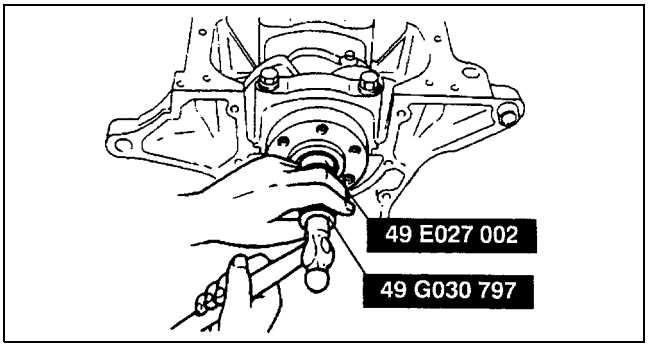

AME2524E081

OIL PUMP INSPECTION

AME222419220101

Relief Spring

- Measure the free length of the relief spring. Replace the relief spring if necessary.

Free length
43.8 mm {1.724 in}

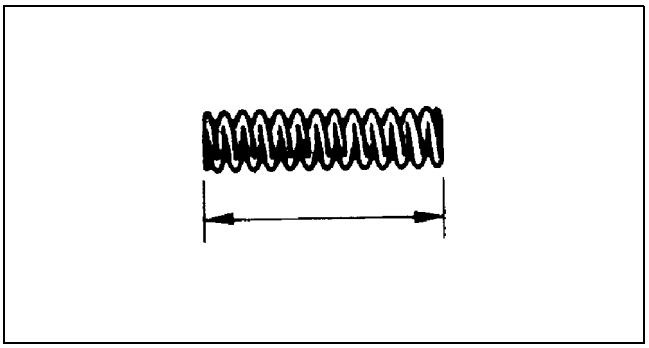

AME2524E057

Rotor Clearance

- Measure the following clearances. Replace the rotor if necessary.

Tooth tip clearance
0.030—0.120 mm {0.0012—0.0047 in}

Maximum tip clearance
0.16 mm {0.006 in}

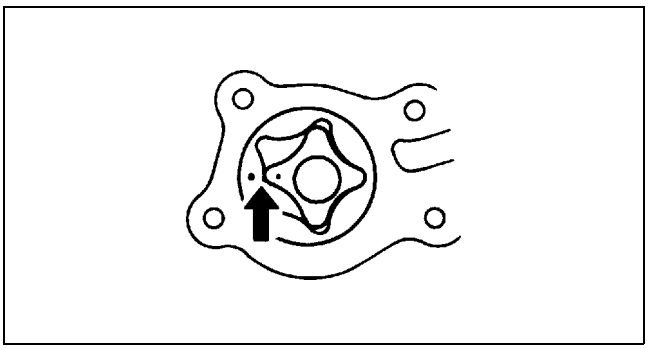

AME2524E058

Outer rotor-to-pump body clearance
0.200—0.294 mm {0.0079—0.0115 in}

Maximum clearance
0.35 mm {0.013 in}

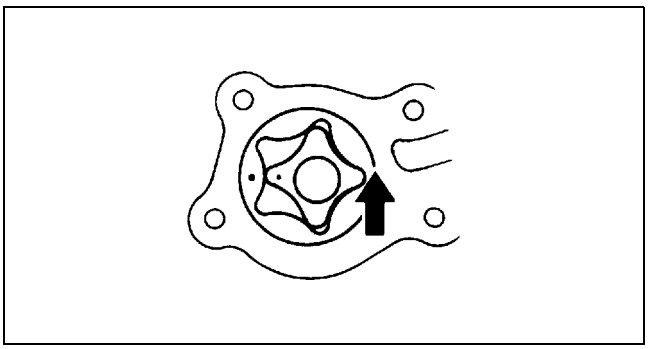

AME2524E059

Side clearance
0.040—0.100 mm {0.0016—0.0039 in}

Maximum clearance
0.15 mm {0.0059 in}

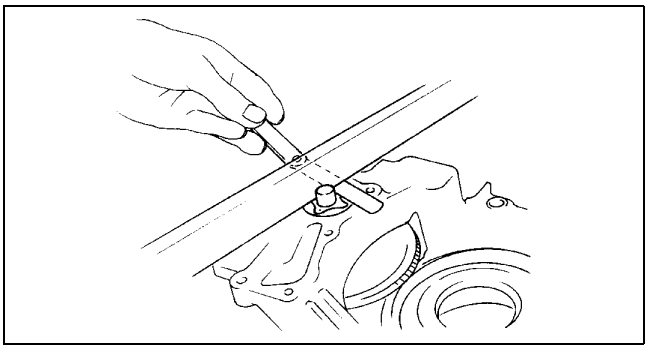

AME2524E060

VALVE CLEARANCE INSPECTION

AME222412111105

1. Remove the cylinder head cover.
2. Turn the crankshaft and align the timing marks so that the piston of the No.1 or No.4 cylinder is at TDC of compression.
3. Measure the valve clearances A with the No.1 cylinder at TDC of compression, and those of B with the No.4 cylinder at TDC of compression.

   Standard valve clearance [Engine cold]
   IN: 0.12—0.18 mm {0.0048—0.0070 in}
   (0.15±0.03 mm {0.0059±0.0012 in})
   EX: 0.32—0.38 mm {0.0126—0.0149 in}
   (0.35±0.03 mm {0.0138±0.0012 in})

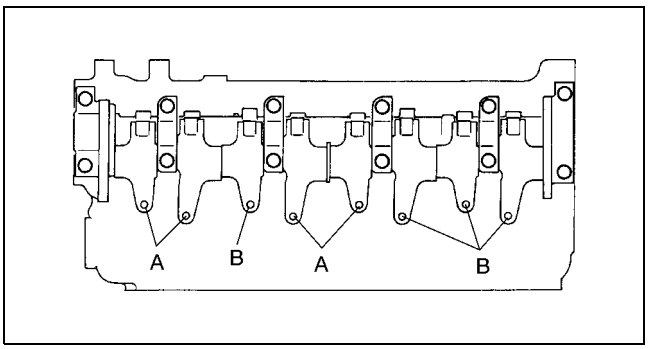

AME2512E001

4. If the valve clearance is not within the specification, adjust the valve clearance. (See B–28 VALVE CLEARANCE ADJUSTMENT)
5. Turn the crankshaft one full turn and measure the remaining valve clearances. Adjust the valve clearance if necessary.

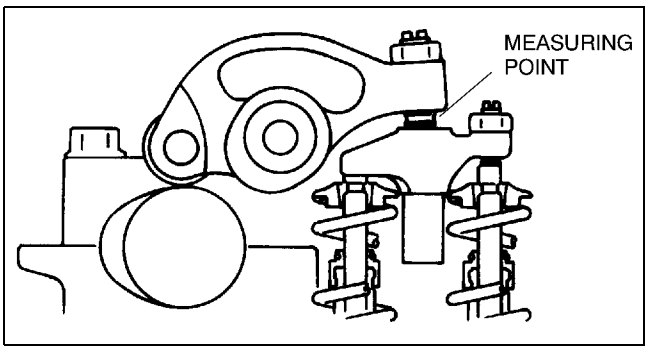

AME2512E002

VALVE CLEARANCE ADJUSTMENT

AME222412111106

1. Remove the injection nozzle bracket.
2. Remove the injection nozzle.

Caution
- **When removing the injection nozzle bracket, always replace the injection nozzle washer. When replacing the injection nozzle washer, wipe off any carbon adhering to the nozzle installation surface of the cylinder head with a clean cloth before installing.**

3. Turn the crankshaft clockwise and set the No.1 cylinder to compression TDC.
4. Adjust the valve clearance A with the No.1 cylinder at TDC of compression, and those of B with the No.4 cylinder at TDC compression.
   (1) Hold the rocker bridge using the **SST** (49 G012 006).

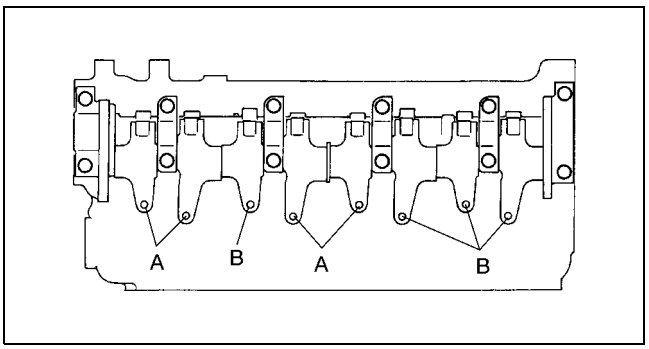

AME2512E001

   (2) Loosen the locknut (d) using the **SST** (49 G012 004), and then turn the adjusting screw (c) using the **SST** (49 G012 005) until it is separated from the valve stem completely.

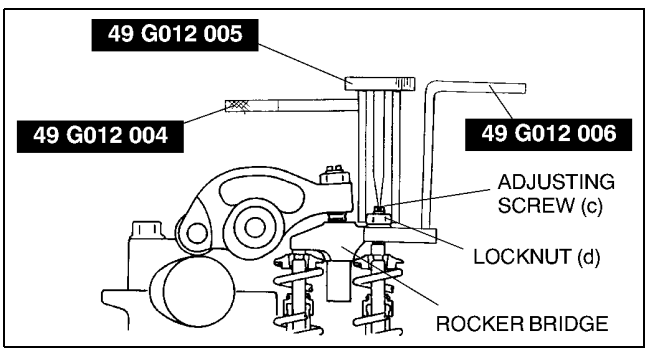

AME2512E003

(3) Loosen the rocker arm locknut (b) using the **SST** (49 G012 004), and then turn the adjusting screw (a) using the **SST** (49 G012 005) until it is separated from the rocker bridge completely.
(4) Insert a feeler gauge between the rocker arm and rocker bridge (e).

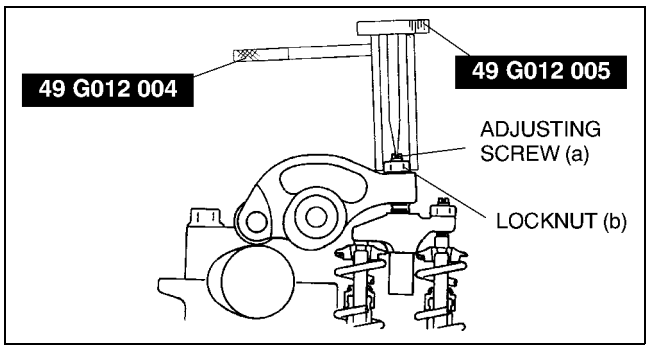

AME2512E004

Standard valve clearance [Engine cold]
IN: 0.12—0.18 mm {0.0048—0.0070 in}
(0.15±0.03 mm {0.0059±0.0012 in})
EX: 0.32—0.38 mm {0.0126—0.0149 in}
(0.35±0.03 mm {0.0138±0.0012 in})

(5) Adjust the valve clearance by turning the adjuster (a) using the **SST** (49 G012 005). Then temporarily tighten locknut (b) using the **SST** (49 G012 004).
(6) With the feeler gauge inserted between the rocker arm end rocker bridge, verify that the feeler gauge remains firmly in place even when the adjusting screw (c) is loosened. If the feeler gauge does not remain firmly in place, repeat procedures from Step 1.
(7) Turn the adjusting screw (c) using the **SST** (49 G012 005) until it reaches the valve stem and the feeler gauge fits more firmly. Then tighten the locknut (d) using the **SST** (49 G012 004) to specified torque.

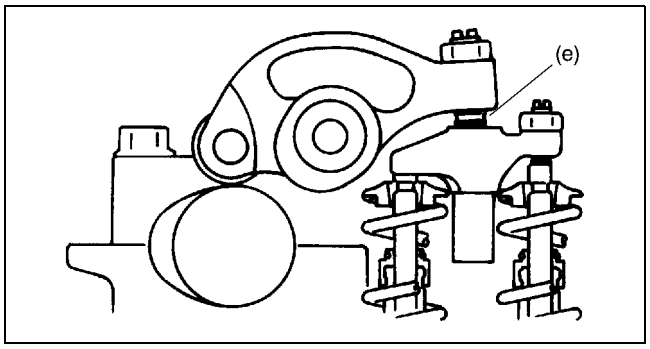

AME2512E005

Tightening torque
16—20 N·m {1.6—2.1 kgf·cm, 12—15 in·lbf}

(8) Loosen the locknut (b) using the **SST** (49 G012 004) and readjust the valve clearance (e).

Standard valve clearance [Engine cold]
IN: 0.12—0.18 mm {0.0048—0.0070 in} (0.15±0.03 mm {0.0059±0.0012 in})
EX: 0.32—0.38 mm {0.0126—0.0149 in} (0.35±0.03 mm {0.0138±0.0012 in})

(9) Tighten the locknut (b) using the **SST** (49 G012 004) to specified torque.

Tightening torque
16—20 N·m {1.6—2.1 kgf·cm, 12—15 in·lbf}

(10)Verify the valve clearance at (e).

Standard valve clearance [Engine cold]
IN: 0.12—0.18 mm {0.0048—0.0070 in} (0.15±0.03 mm {0.0059±0.0012 in})
EX: 0.32—0.38 mm {0.0126—0.0149 in} (0.35±0.03 mm {0.0138±0.0012 in})

5. Turn the crankshaft one full turn and adjust the remaining valve clearances.
6. Install the injection nozzle.
7. Install the injection nozzle bracket.
(See B–41 Injection Nozzle Assembly Note)

CYLINDER BLOCK (I) ASSEMBLY

1. Assemble in the order indicated in the table.

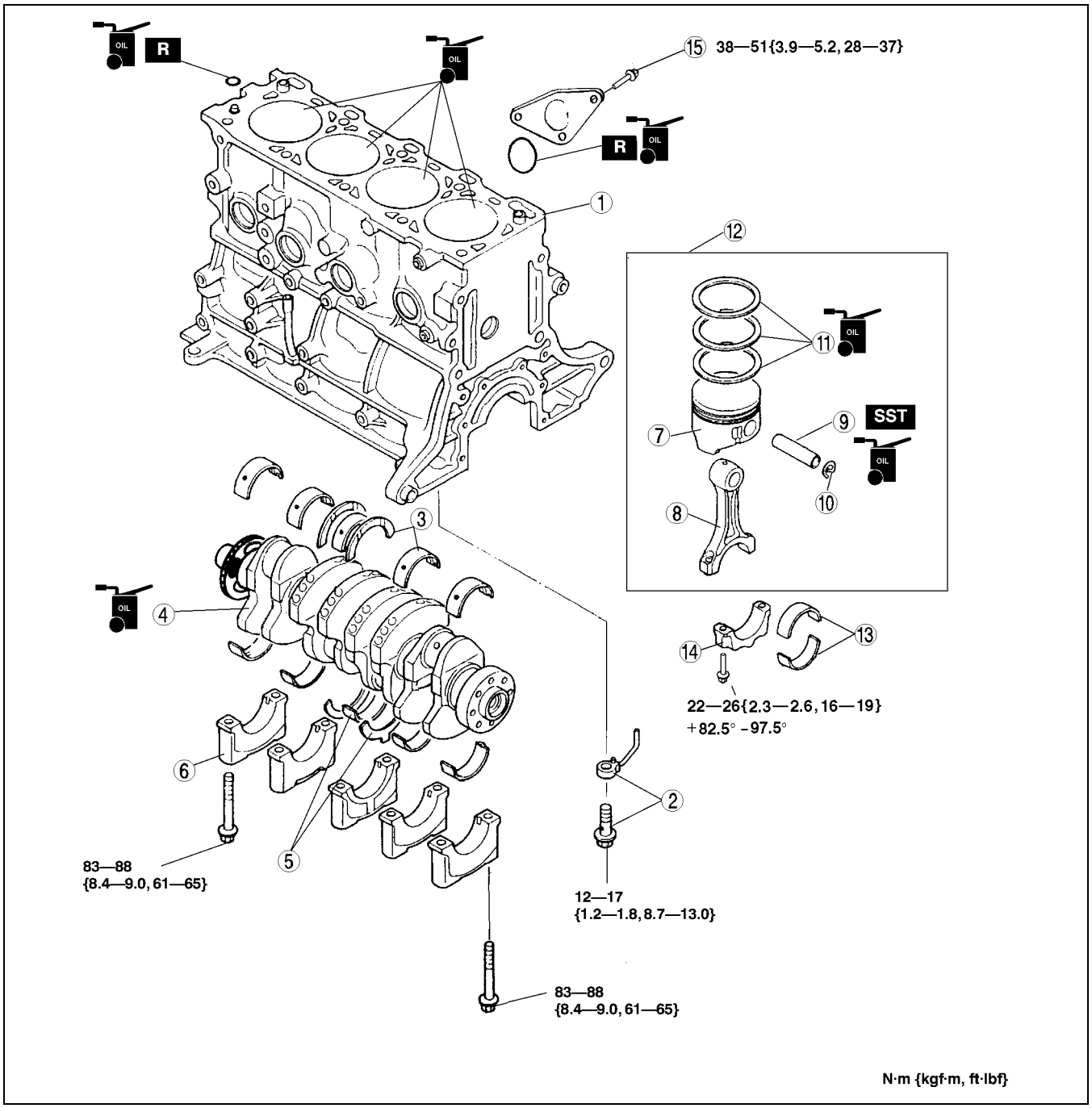

AME2524E075

1	Cylinder block
2	Oil jet
3	Upper main bearing, thrust bearing
4	Crankshaft
5	Lower main bearing, thrust bearing
6	Main bearing cap (See B–31 Main Bearing Cap Assembly Note)
7	Piston (See B–31 Piston Assembly Note)
8	Connecting rod

9	Piston Pin
10	Snap ring
11	Piston ring (See B–31 Piston Ring Assembly Note)
12	Connecting rod, piston (See B–31 Piston Ring Assembly Note)
13	Connecting rod bearing
14	Connecting rod cap (See B–32 Connecting Rod Cap Assembly Note)
15	Cover

Main Bearing Cap Assembly Note

1. Tighten the bolts in the order shown.

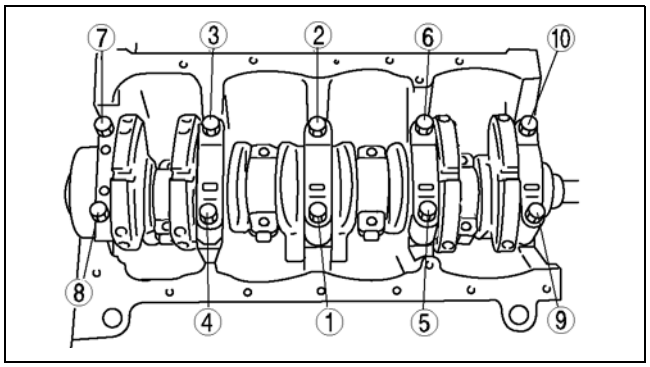

AME2524E067

Piston Assembly Note

1. Assemble the piston and the connecting rod in the direction from which they were disassembled.
2. Apply clean engine oil to the piston pin.
3. Install the piston pin until the pin contacts the clip. If the pin cannot be installed easily, heat the piston.

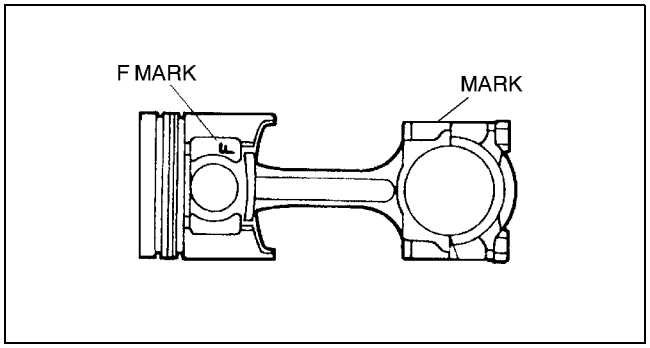

AME2524E036

Piston Ring Assembly Note

1. Install the first and second rings as shown.

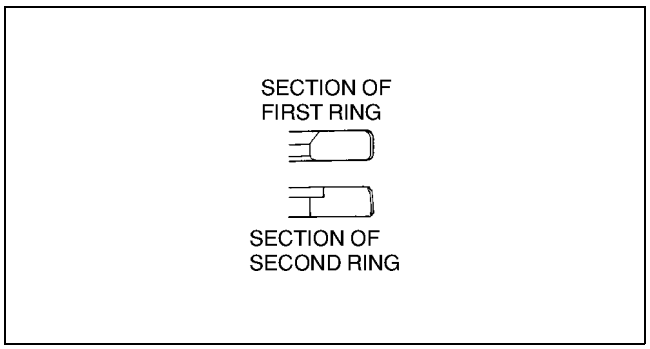

AME2524E037

Connecting Rod, Piston Assembly Note

1. Insert the piston and connecting rod into the cylinder with the F mark facing the front of the engine.

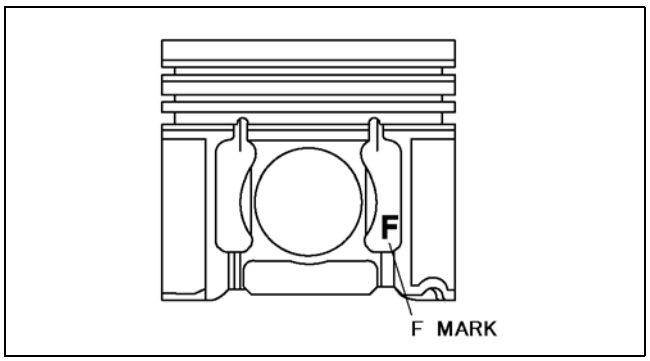

AME2524E062

Connecting Rod Cap Assembly Note

1. Install the connecting rod caps with the knock pins aligned.

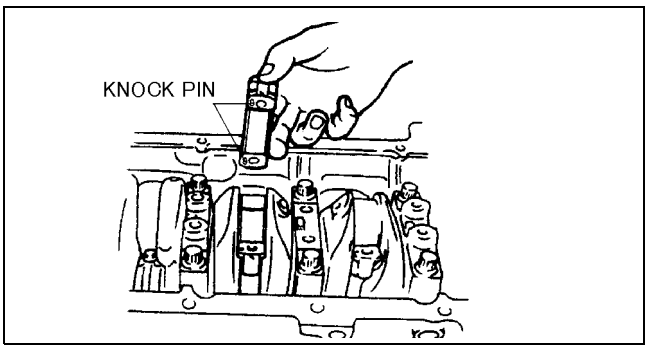

AME2524E061

CYLINDER BLOCK (II) ASSEMBLY

1. Assemble in the order indicated in the table.

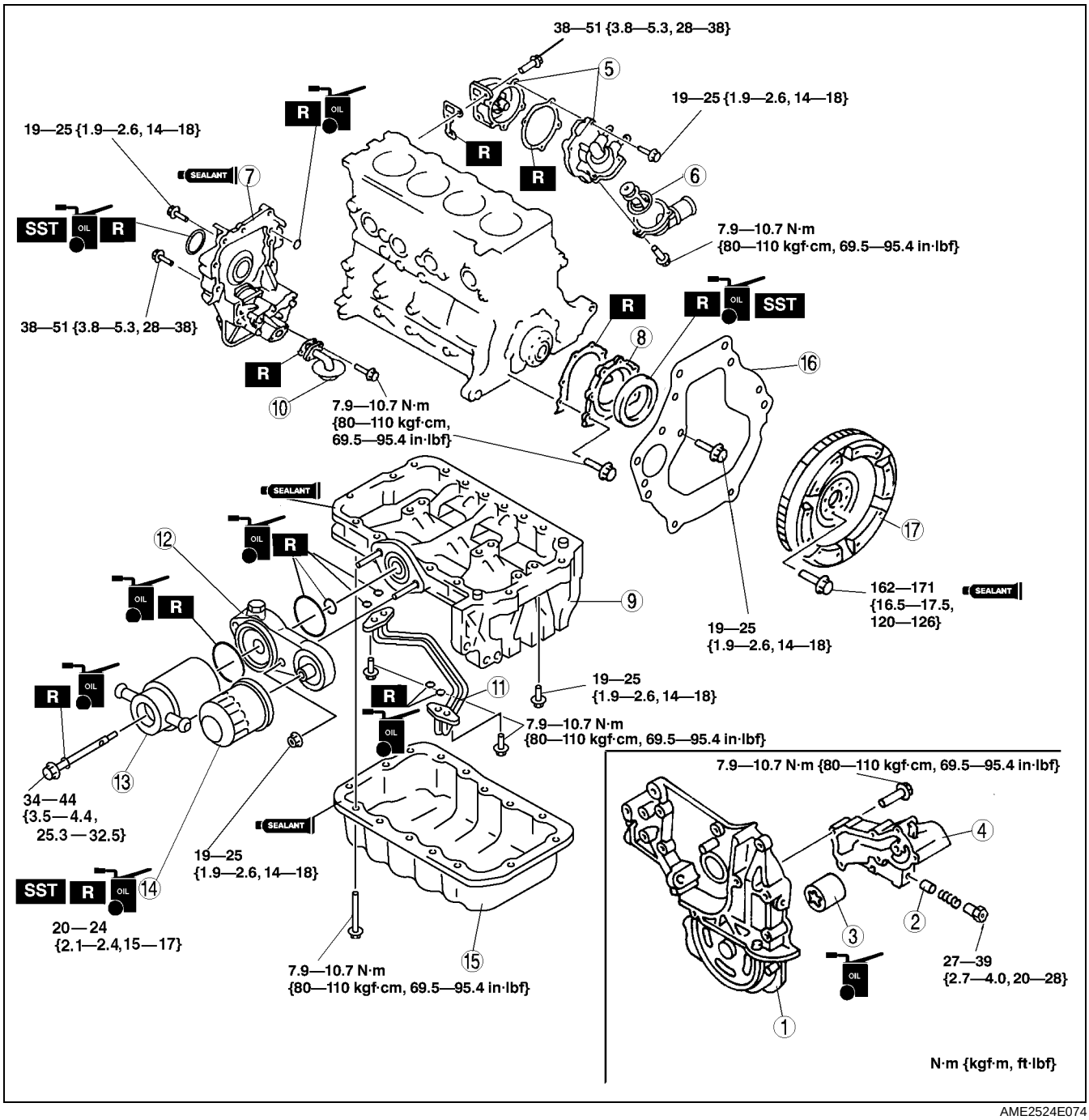

AME2524E074

1	Oil pump body
2	Relief valve
3	Outer rotor
4	Oil pump cover (See B–33 Oil Pump Cover Assembly Note)
5	Water Pump
6	Thermostat (See B–33 Thermostat Assembly Note)
7	Oil pump (See B–34 Oil Pump Assembly Note)
8	Rear cover (See B–35 Rear Cover Assembly Note)
9	Oil pan upper block (See B–35 Oil Pan Upper Block Assembly Note)
10	Oil Strainer
11	Oil pipe
12	Oil filter body
13	Oil cooler
14	Oil filter
15	Oil pan (See B–36 Oil Pan Assembly Note)
16	End plate
17	Flywheel (See B–36 Flywheel Assembly Note)

Oil Pump Cover Assembly Note

1. Install the oil pump cover in the order shown.
2. Verify that the oil pump rotates smoothly when turned driven gear by hand.

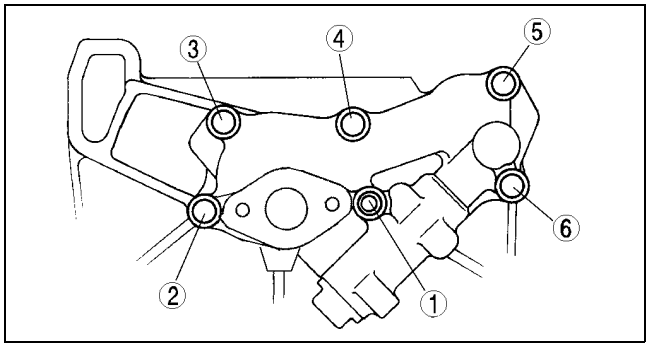

AME2524E026

Thermostat Assembly Note

1. Verity that the jiggle pin is aligned with the projection of the thermostat gasket as shown.
2. Install the thermostat and gasket into the thermostat cover, aligning the projection with the cover as shown.

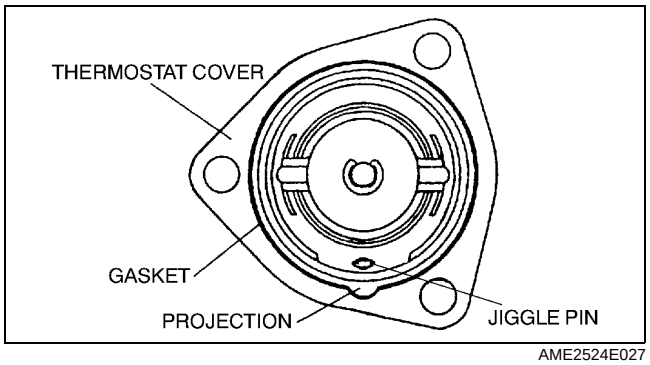

AME2524E027

Oil Pump Assembly Note

1. Apply clean engine oil to the oil seal.
2. Push the oil seal slightly in by hand.
3. Set the oil pump and **SSTs**.

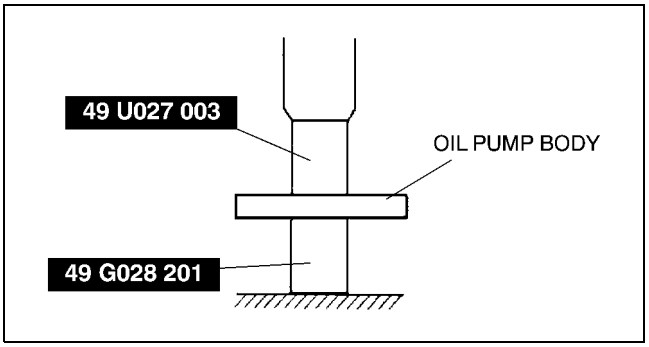

AME2524E028

4. Press the oil seal in evenly using the **SST**.

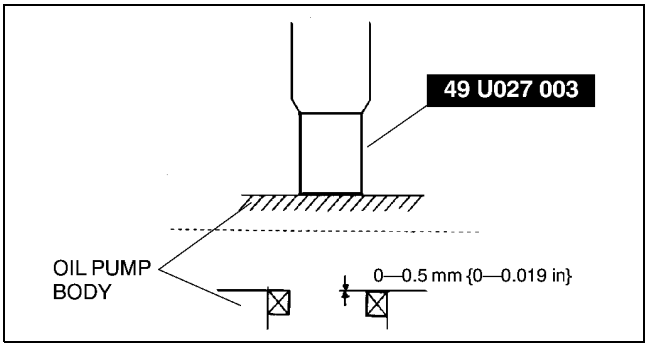

AME2524E029

5. Apply silicone sealant to the oil pump housing continuously as shown.

   Thickness
   1.0—2.0 mm {0.040—0.078 in}

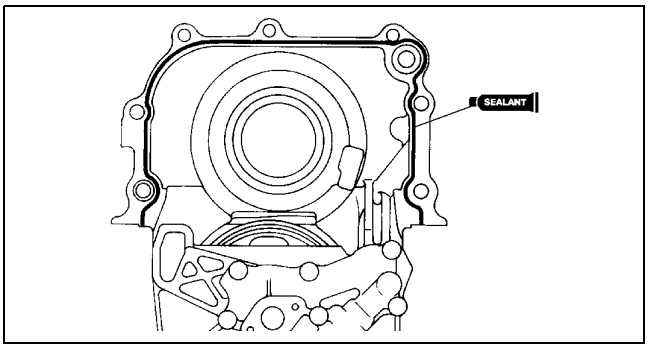

AME2524E030

6. Install the oil pump.

   Tightening torque
   A: 19—25 N·m {1.9—2.6 kgf·m, 14—l8 ft·lbf}
   B: 38—51 N·m {3.8—5.3 kgf·m, 2—38 ft·lbf}

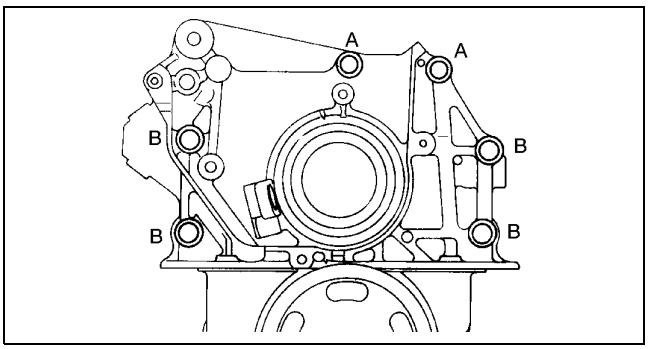

AME2524E031

Oil Pan Upper Block Assembly Note

1. Apply silicone sealant to the oil pan upper block as shown.

   Thickness
   2.0—3.0 mm {0.08—0.11 in}

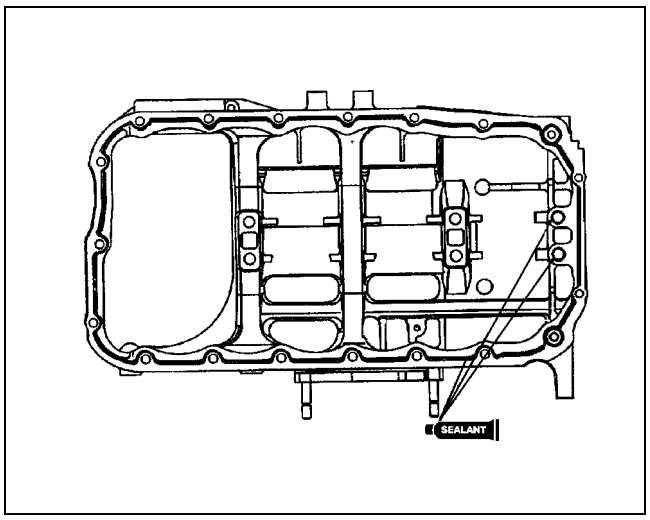

AME2524E077

2. Tighten the oil pan upper block bolts in two or three steps in the order shown.

Bolt No.	Tightening Torque
1—6	**19—25 N·m {1.9—2.6 kgf·m, 14—18 ft·lbf}**
7—13	**7.9—10.7 N·m {80—110 kgf·cm, 69.5—95.4 in·lbf}**

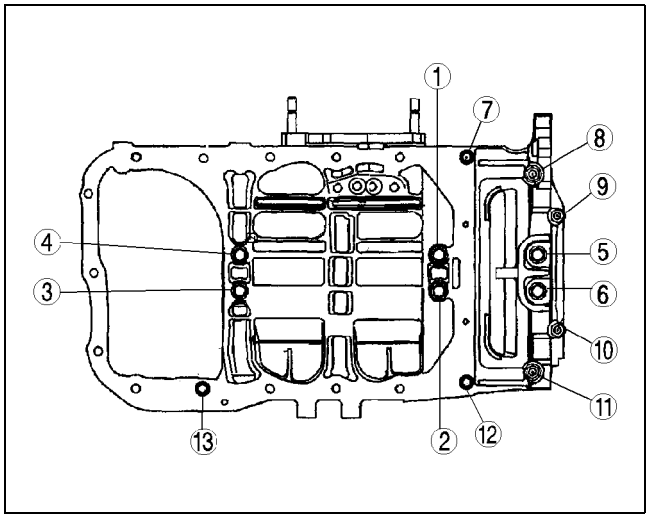

AME2524E079

Rear Cover Assembly Note

1. Apply clean engine oil to the oil seal.
2. Push the oil seal slightly in by hand.
3. Press the oil seal in evenly using the **SSTs**.

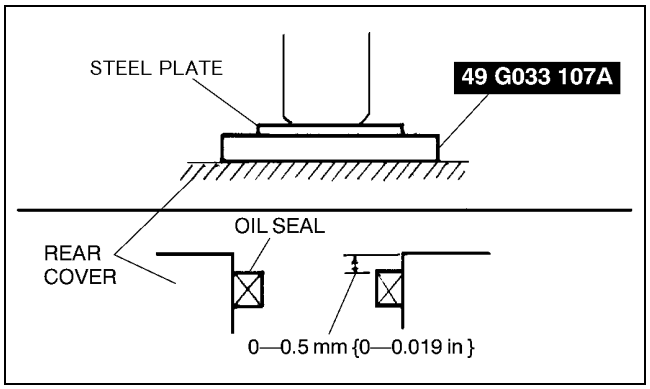

AME2524E032

Oil Pan Assembly Note

Caution
- **If the bolts are reused, remove the old sealant from the bolt threads. Tightening a bolt that has old sealant on it can cause bolt hole damage.**

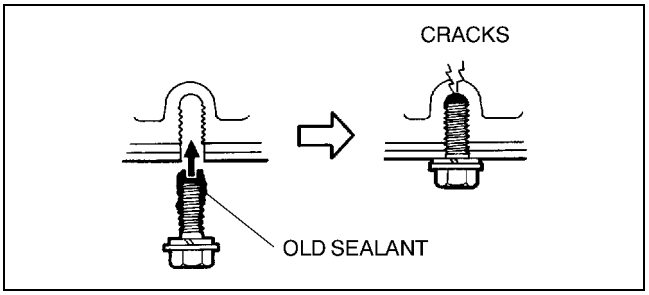

AME2524E033

1. Apply silicone sealant to the oil pan along the inside of the bolt holes and overlap the ends.

   Thickness
   2.5—3.5 mm {0.099—0.137 in}

2. Install the oil pan.
3. Hand tighten the flangeless bolts and tighten the flanged bolts.

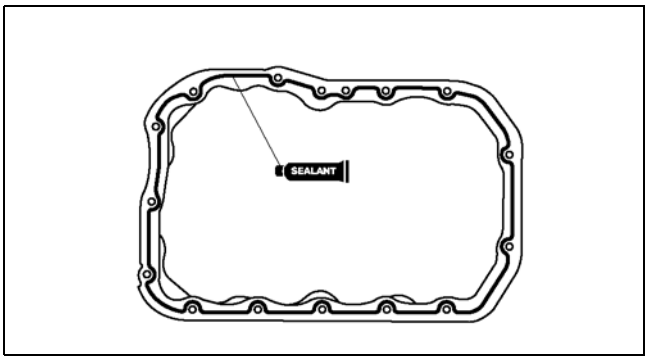

AME2524E063

Flywheel Assembly Note
1. Hold the flywheel using the **SST**.
2. When reusing the bolts, clean and apply sealant to the threads.

Note
- No sealant is needed when new bolts are use.

3. Tighten the bolts in two or three steps in the order shown.

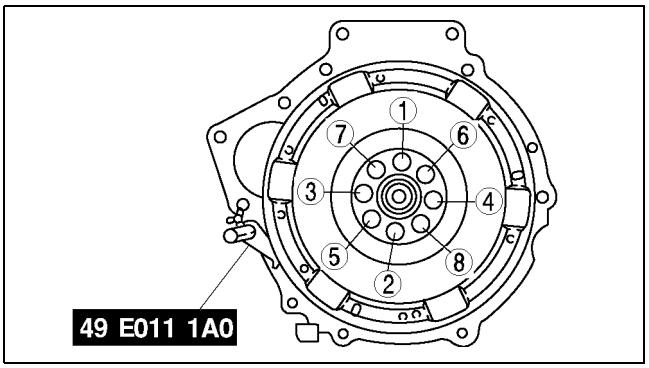

AME2524E072

CYLINDER HEAD (I) ASSEMBLY

1. Assemble in the order indicated in the table.

1	Valve Seal (See B–37 Valve Seal Assembly Note)
2	Valve
3	Lower valve spring seat
4	Valve spring
5	Upper valve spring seat
6	Valve keeper (See B–38 Valve Keeper Assembly Note)
7	Cylinder head gasket
8	Cylinder head (See B–38 Cylinder Head Assembly Note)
9	Engine coolant temperature sensor
10	Glow plug, Grow Plug Lead (See B–38 Glow Plug, Glow Plug Lead Assembly Note)

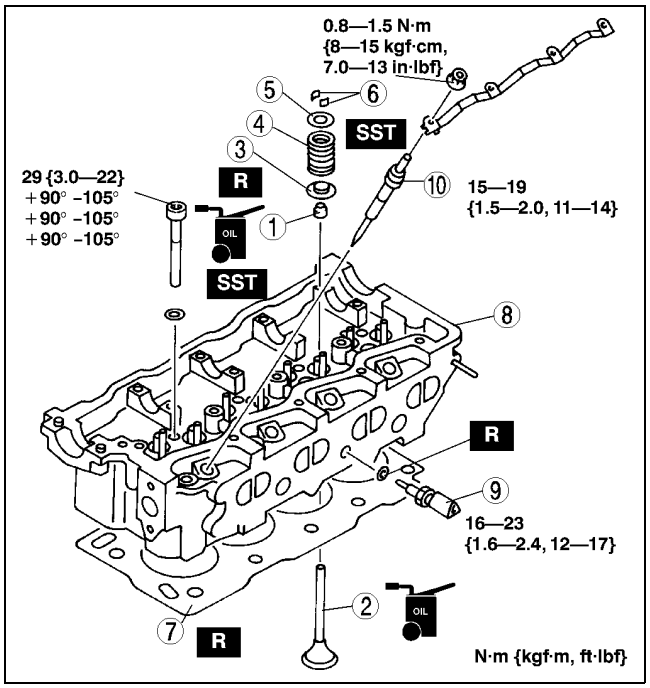

AME2524E073

Valve Seal Assembly Note

1. Assemble the **SSTs** so that depth L is as specified.
2. Press the valve seal onto the valve guide by hand.

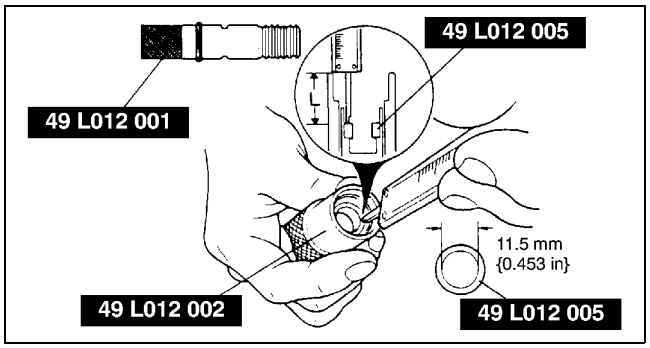

AME2511E003

3. Tap the **SSTs** using a plastic hammer until its lower end touches the cylinder head.

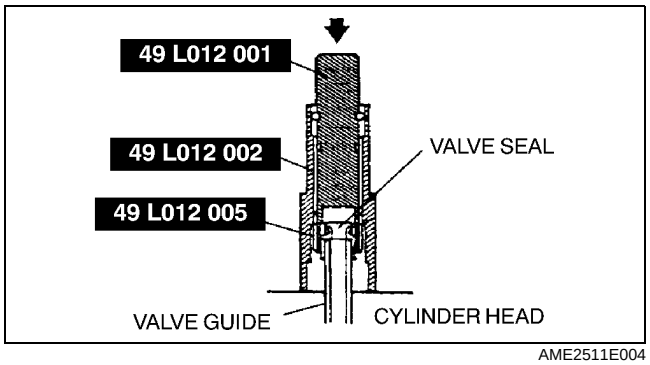

AME2511E004

Valve Keeper Assembly Note

1. Install the valve keeper using the **SSTs**.

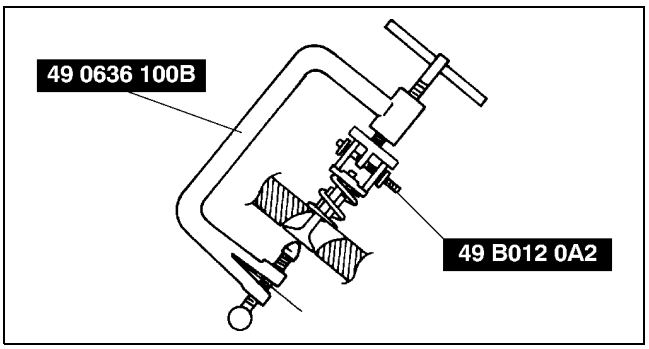

AME2511E001

Cylinder Head Assembly Note

1. Tighten the bolts in two or three steps in the order shown.

   Tightening torque
   29 N·m {3.0 kgf·m, 22 ft·lbf}

2. Put a paint mark on each bolt head.
3. Using the marks as a reference, tighten the bolts by turning each **90°—105°** in the sequence shown.
4. Further tighten each bolt by turning another **90°—105°**.

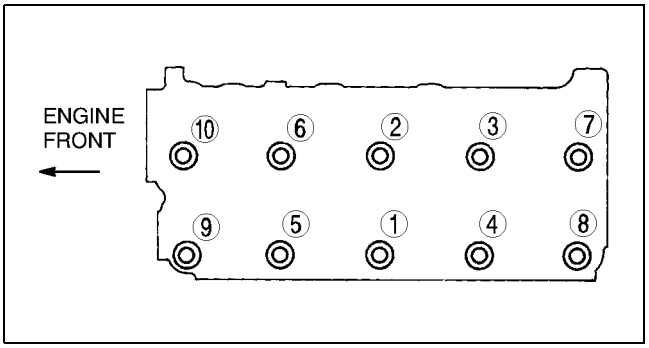

AME2524E021

5. Further tighten each bolt by turning another **90°—105°**.

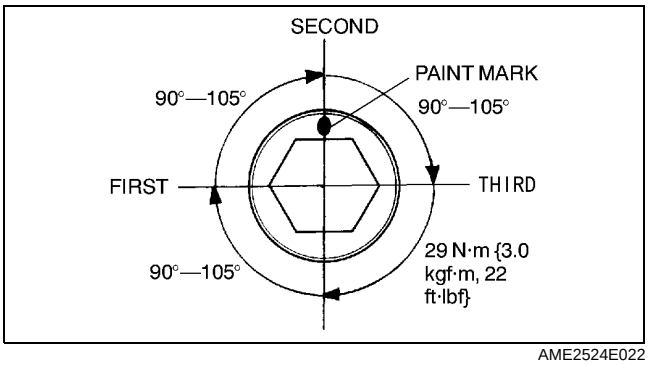

AME2524E022

Glow Plug, Glow Plug Lead Assembly Note

Caution

- **Damaging heat-generating part of the plug can cause the plug to blow out. Do not use the plug if it is dropped from a height over 10 cm {3.9 in}.**
- **When installing the glow plug, tighten it one or more threads by hand, then further tighten using tool.**

CYLINDER HEAD (II) ASSEMBLY

1. Assemble in the order indicated in the table.

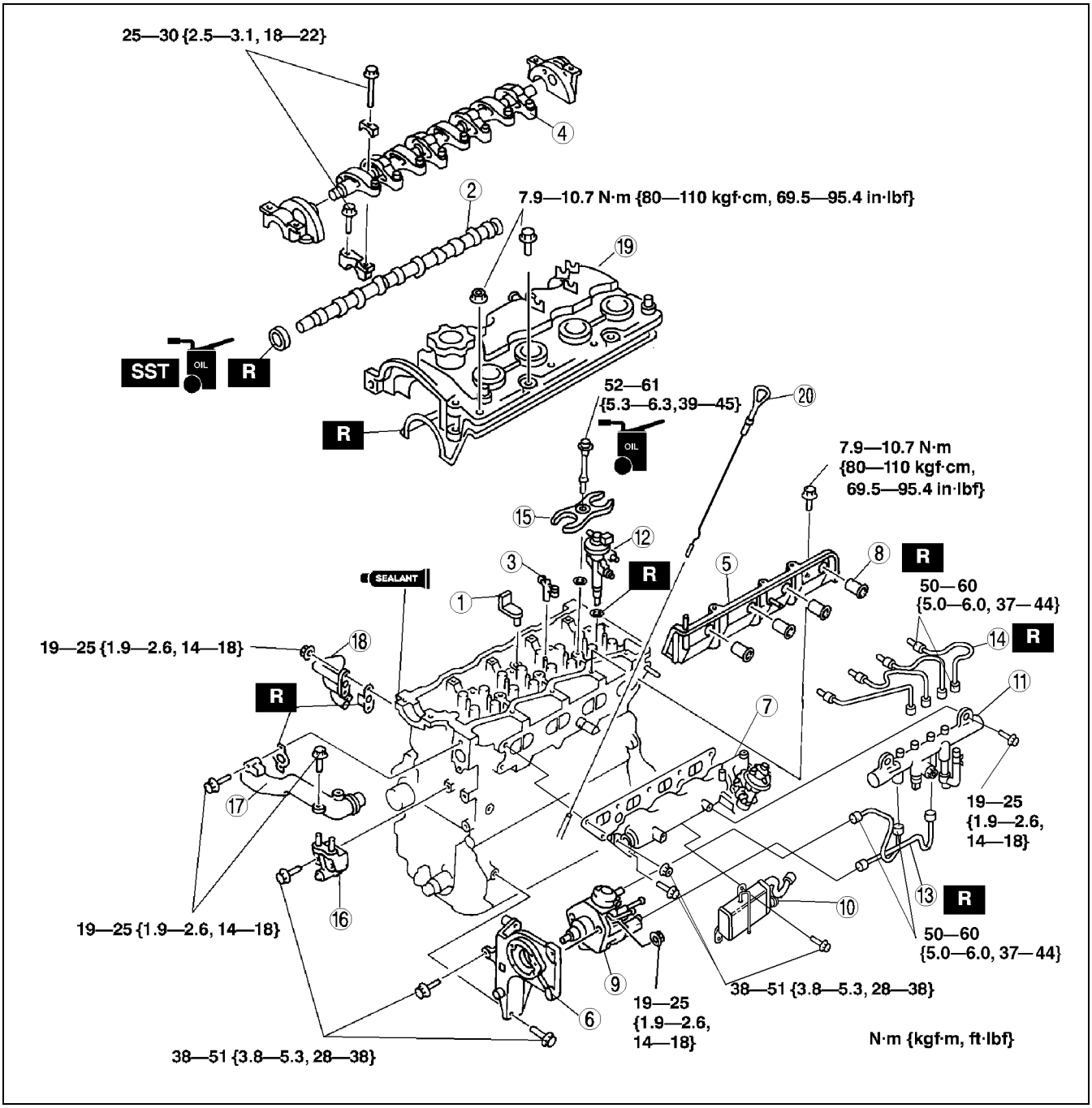

AME2524E023

1	Breather pipe
2	Camshaft
3	Rocker bridge
4	Rocker arm and rocker arm shaft (See B–40 Rocker Arm and Rocker Arm Shaft Assembly Note)
5	Side wall
6	Injection pump bracket (See B–41 Injection Pump Bracket Assembly Note)
7	Intake manifold (See B–41 Intake Manifold Assembly Note)
8	Nozzle seal
9	Injection pump
10	EGR water cooler

11	Common rail
12	Injection nozzle (See B–41 Injection Nozzle Assembly Note)
13	Fuel injection pipe
14	Fuel injection pipe
15	Injection nozzle bracket
16	No. 3 engine mount bracket
17	Water outlet (See B–42 Water Outlet Assembly Note)
18	Bypass pipe
19	Cylinder head cover (See B–42 Cylinder Head Cover Assembly Note)
20	Dipstick

Rocker Arm and Rocker Arm Shaft Assembly Note

1. Apply sealant as shown in the figure.

   Thickness
   2.0 mm {0.079 in} min.

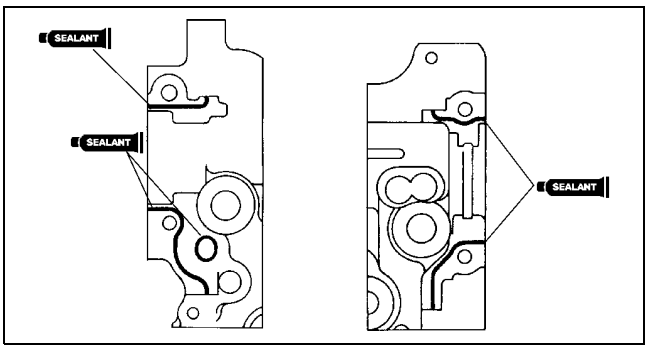

AME2521E002

2. Install the camshaft caps according to the cap number.

3. Install the rocker arm shaft plane side upward.

   Caution
   - **Because there is little camshaft thrust clearance, the camshaft must be held horizontally while it is installed. Otherwise, excessive force will be applied to the thrust area, causing burr on the thrust receiving area of the cylinder head journal. To avoid this, the following procedure must be observed.**

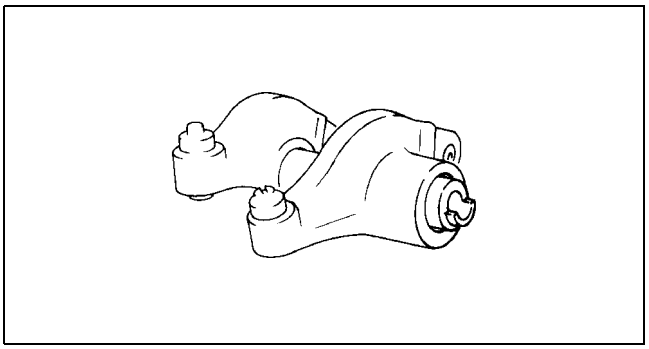
AME2521E003

4. Tighten the bolts in two or three steps in the order shown.
5. Apply clean engine oil to the new oil seal.
6. Push the oil seal slightly in by hand.

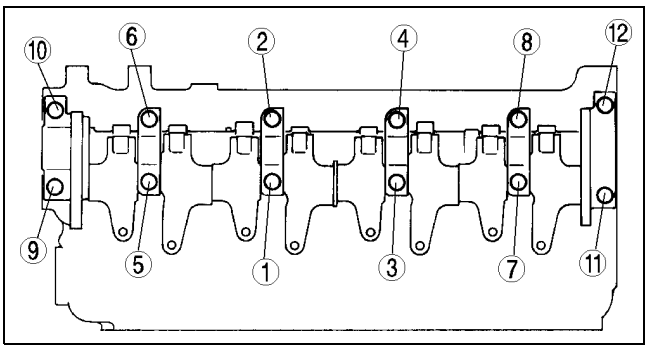

AME2521E004

7. Tap the oil seal into the cylinder head using the **SST** and a hammer.

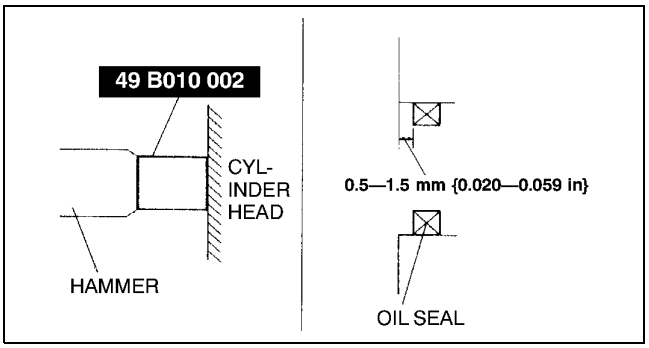

AME2524E015

Side Wall Assembly Note

1. Apply silicone sealant as shown in the figure.

   Thickness
   2.0 mm {0.079 in} min.

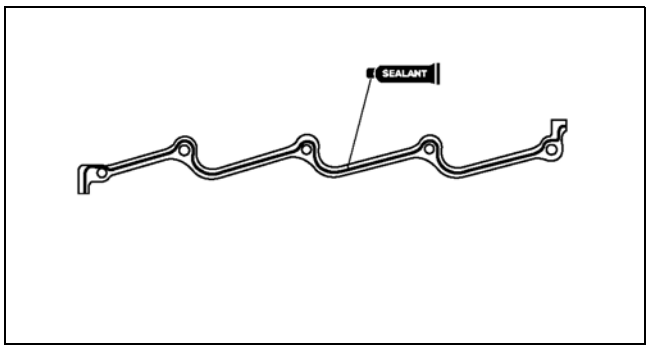

AME2524E069

Injection Pump Bracket Assembly Note

1. Tighten the bolts in the order shown.

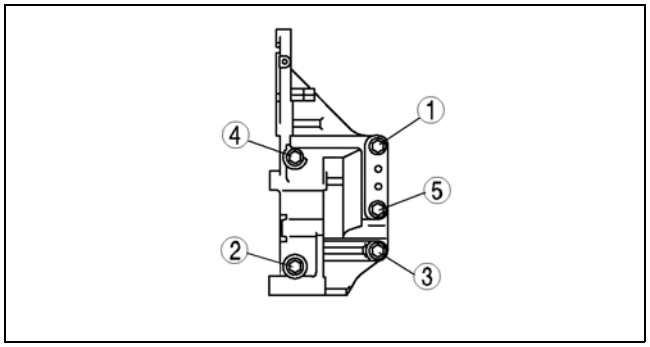

AME2524E070

Intake Manifold Assembly Note

- Tighten from centre to outwards.

Injection Nozzle Assembly Note

1. Temporarily tighten the injection nozzle bracket.

   Tightening torque
   10—20 N·m {1.0—2.0 kgf·m, 8—l4 ft·lbf}

2. Temporarily tighten the common rail.
3. Temporarily tighten the injection pipes.
4. Fully tighten the injector side injection pipes, then tighten the common rail side.

   Tightening torque
   50—60 N·m {5.0—6.0 kgf·m, 37—44 ft·lbf}

5. Fully tighten the injection pump side and common rail side injection pipes.

   Tightening torque
   50—60 N·m {5.0—6.0 kgf·m, 37—44 ft·lbf}

6. Fully tighten the injection nozzle bracket.

   Tightening torque
   52—61 N·m {5.3—6.3 kgf·m, 39—45 ft·lbf}

7. Fully tighten the common rail.

   Tightening torque
   19—25 N·m {1.9—2.6 kgf·m, 14—18 ft·lbf}

Cylinder Head Cover Assembly Note

1. Apply silicone sealant to the shaded areas.

   Thickness
   2.0 mm {0.079 in} min.

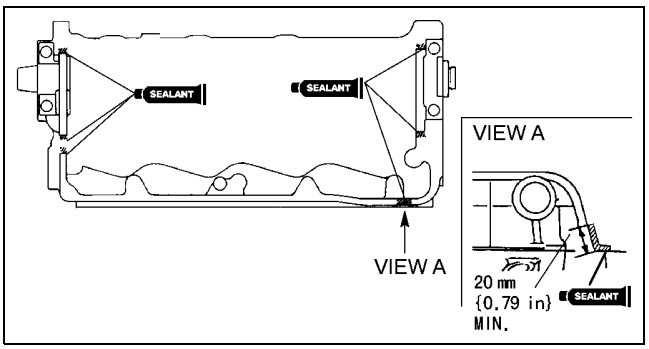

AME2524E017

2. Tighten the bolts in the order shown.

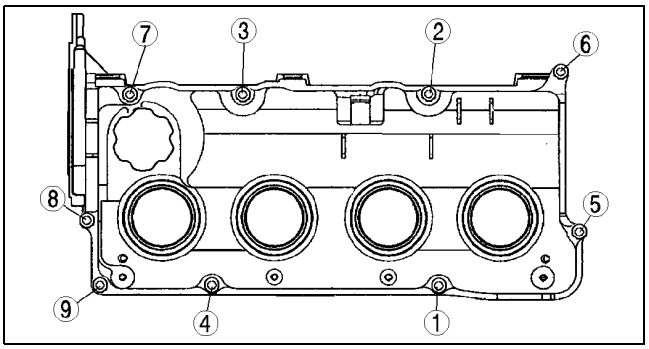

AME2524E777

Water Outlet Assembly Note

1. Tighten the bolts in the order shown.

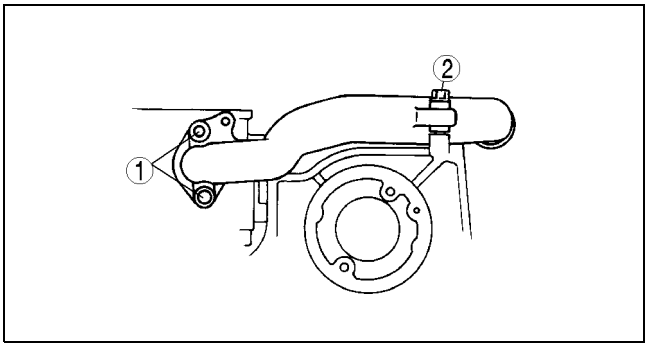

AME2524E018

TIMING BELT ASSEMBLY

1. Assemble in the order indicated in the table.

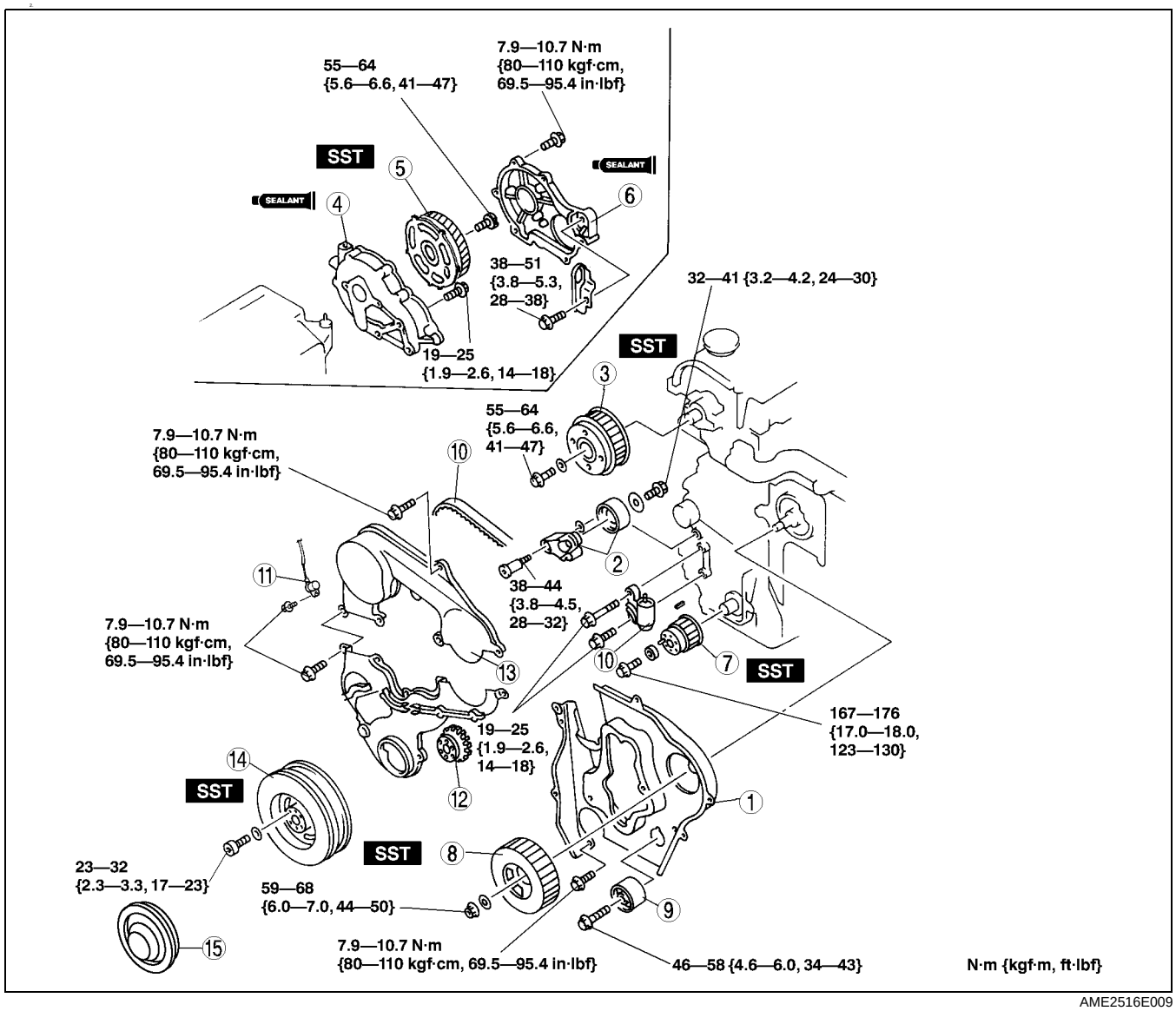

AME2516E009

1	Seal plate (See B–44 Seal Plate Assembly Note)
2	Tensioner
3	Camshaft pulley (See B–44 Camshaft Pulley Assembly Note)
4	Gear case (See B–44 Gear Case Assembly Note)
5	Drive gear (See B–44 Drive Gear Assembly Note)
6	Gear cover (See B–45 Gear Cover Assembly Note)
7	Timing belt pulley (See B–45 Timing Belt Pulley Assembly Note)

8	Injection pump pulley (See B–45 Injection Pump Pulley Assembly Note)
9	Idler (See B–46 Idler Assembly Note)
10	Timing belt, timing belt auto tensioner (See B–46 Timing Belt, Timing Belt Auto Tensioner Assembly Note)
11	Crankshaft position sensor
12	Guide plate
13	Timing belt cover
14	Crankshaft pulley (See B–48 Crankshaft Pulley Assembly Note)
15	Pulley cover

Seal Plate Assembly Note

1. Install the seal plate and hand tighten the bolts in the order A to B.
2. Tighten the bolts in the order shown.

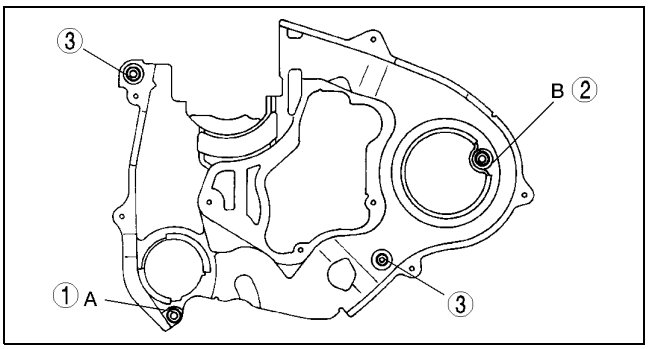

AME2516E004

Camshaft Pulley Assembly Note

1. Hold the camshaft using the **SST**.

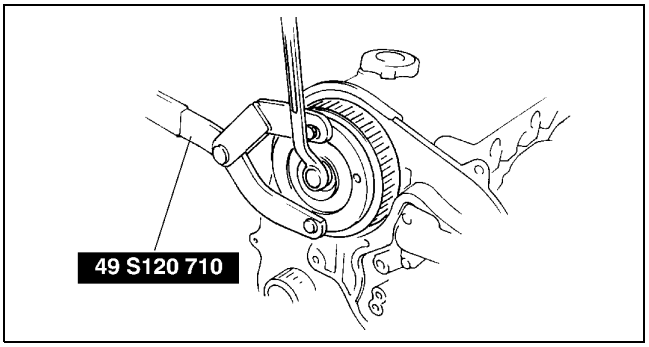

AME2524E009

Gear Case Assembly Note

1. Apply silicone sealant as shown in the figure.

   Thickness
   1.5—2.5 mm {0.059—1.098 in}

2. Tighten the bolts in clockwise order.

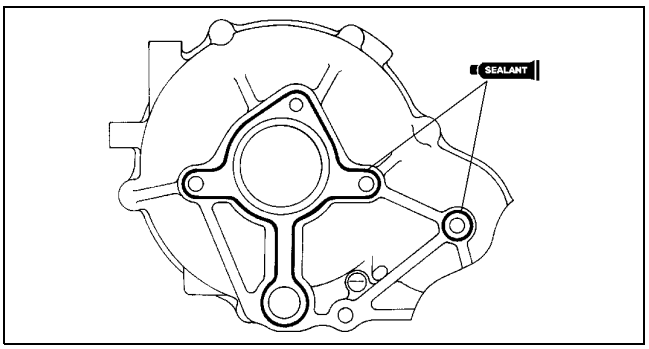

AME2524E011

Drive Gear Assembly Note

1. Hold the camshaft using the **SST**.
2. Remove the drive gear lock bolt.

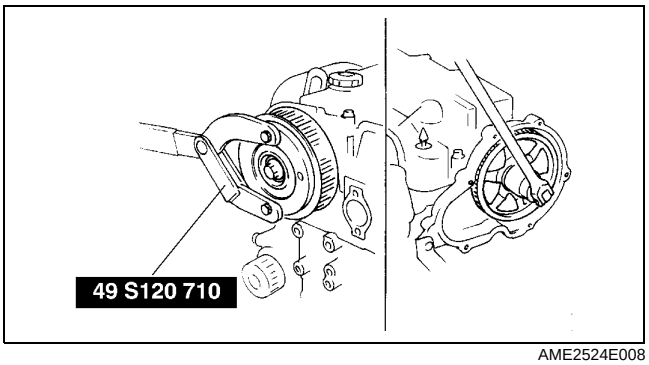

AME2524E008

Gear Cover Assembly Note

1. Apply silicone sealant as shown in the figure.

   Thickness
   1.5—2.5 mm {0.059—1.098 in}

2. Tighten the bolts in clockwise order.

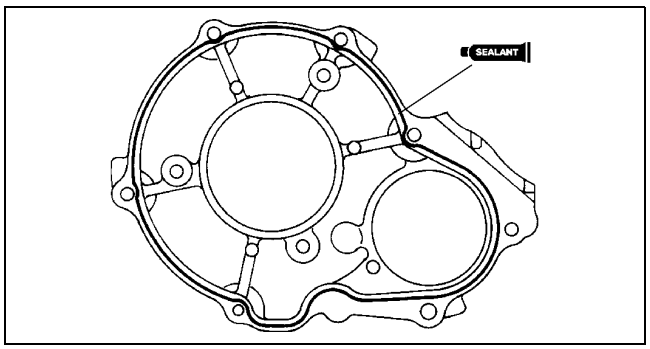

AME2524E012

Timing Belt Pulley Assembly Note

1. Hold the crankshaft using the **SST**.
2. Tighten the timing belt pulley lock bolt.

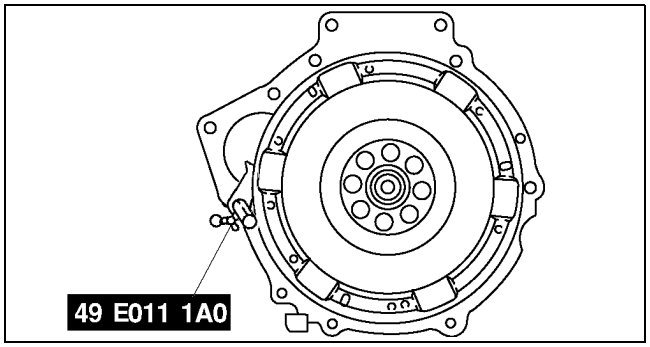

AME2524E065

Injection Pump Pulley Assembly Note

Caution

- **To prevent the bolts (M8 x 1.25) from damaging the injection pump and pulley, do not fully tighten the detent bolt. If it contacts the pulley surface, it will damage the pulley.**

1. Fix the injection pump pulley to the bracket using two bolts (M8 x 1.25).

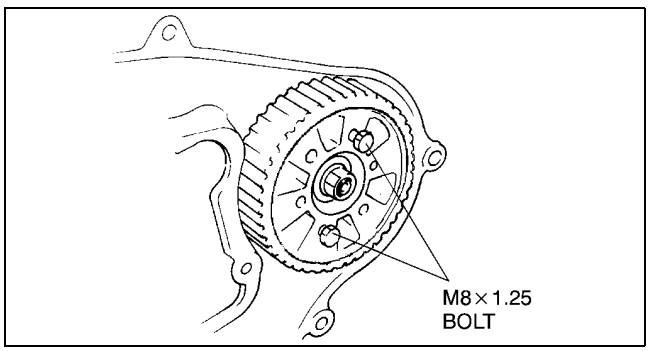

AME2524E005

Idler Assembly Note

Caution
- **The idler has a front and back relative to the engine, therefore when installing make sure that the longer projection of the shaft is on the engine side as indicated in the figure.**

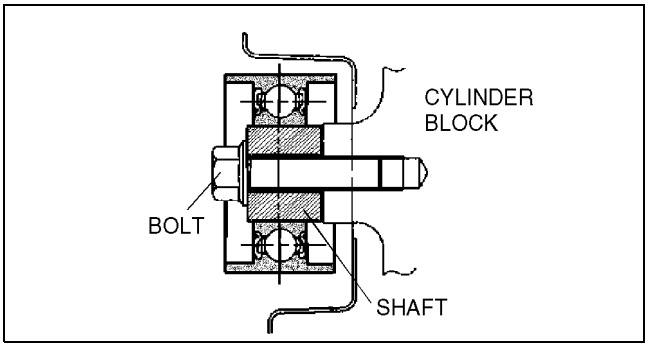

AME2524E099

Timing Belt, Timing Belt Auto Tensioner Assembly Note

Caution
- **Placing the auto tensioner horizontally can cause oil leakage and damage the auto tensioner. Place the auto tensioner vertically when using a vise.**

1. Verify the thrust of the auto tensioner rod in the following order:
   (1) If the tensioner rod is rigid when it is pushed with a force of approximately 235 N {24 kgf, 53 lbf}, push it down slowly and fix the pin in the hole.
   (2) If there is no resistance on the tensioner rod and it moves slightly when it is pushed with a force of approximately **235 N {24 kgf, 53 lbf}**;

Caution
- **To prevent damage to the inside of the auto tensioner, do not press down the auto tensioner rod with a force greater than the specified 235 N {24 kgf, 53 lbf}. Be careful that the rod does not touch the bottom.**

1) Push it down slowly two or three times to the bottom end of the rod.
2) If the rod protrudes approximately 8.1 mm {0.32 in}, verify that there is resistance on the tensioner rod.
- If the resistance is restored, push it down slowly and fix the pin in the hole. If the resistance is not restored, replace the auto tensioner.

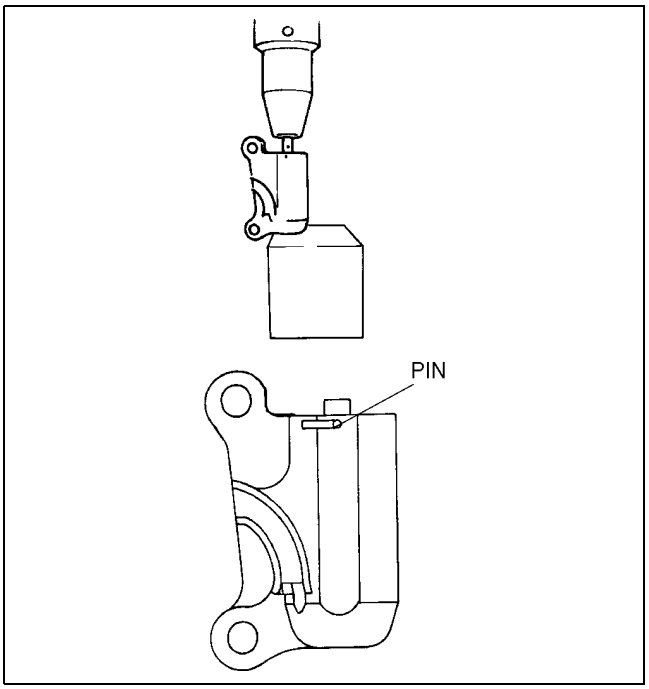

AME2516E005

Caution
- **To prevent the bolts (M8 x 1.25) from damaging the injection pump and pulley, do not fully tighten the detent bolt. If it contacts the pulley surface, it will damage the pulley.**

2. Verify that all timing marks are correctly aligned.
3. Fix the camshaft pulley to the cylinder head using bolt (M8 x 1.25).

4. Fix the injection pump pulley to the bracket using two bolts (M8 x 1.25).
5. If not, align all timing marks according to the following procedure.

Caution

- **Turn the crankshaft in the direction which will prevent the TDC and BDC from being passed. Otherwise it can cause the valve and piston to contact.**

(1) Turn the crankshaft and set it an angle of 45° or more away from the TDC and BDC.
(2) Align the timing marks of the camshaft pulley.
(3) Align the timing marks of the injection pump pulley.
(4) Turn the crankshaft and align the timing marks of the timing belt pulley.

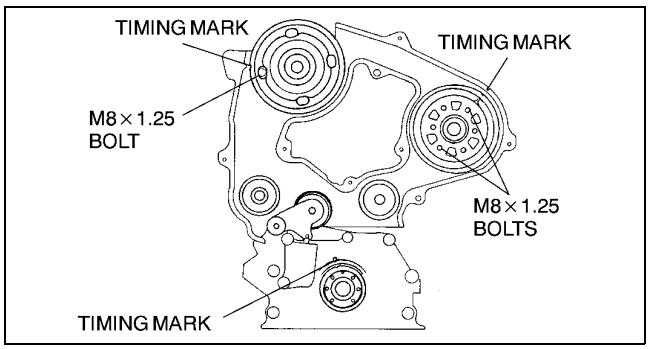

AME2516E006

6. Install the timing belt on the pulleys in the following order.
(1) Timing belt pulley
(2) Idler
(3) Injection pump pulley
(4) Camshaft pulley
(5) Water pump pulley
(6) Tensioner
7. Remove the injection pump pulley fixing bolts and camshaft pulley fixing bolt (M8 x 1.25).
8. Hand–tighten the auto tensioner bolts in the order A to B.

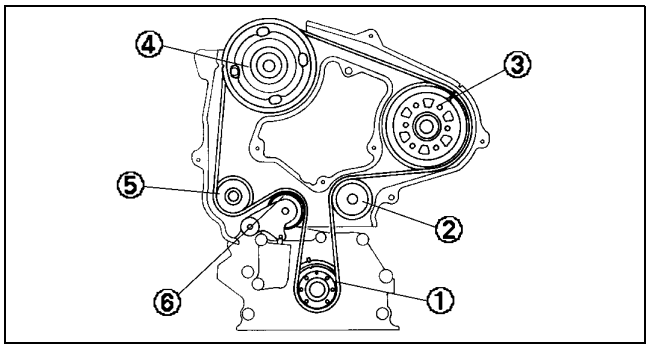

AME2516E007

9. Tighten the auto tensioner bolts in the order A to B.
10. Remove the pin from the auto tensioner to apply tension to the belt.
11. Turn the crankshaft clockwise twice, and align the timing marks.
12. Verify that all timing marks are correctly aligned. If not, repeat from **Timing Belt, Timing Belt Auto Tensioner Removal Note**.

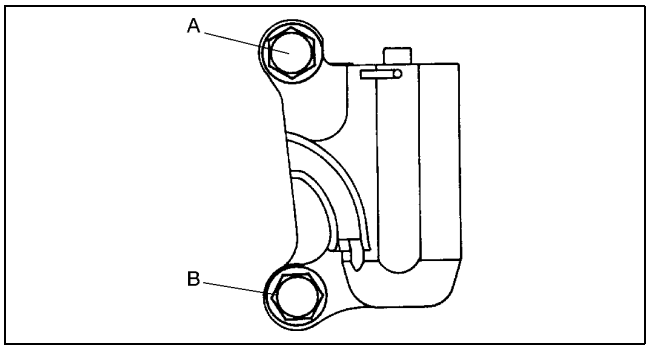

AME2516E008

Crankshaft Pulley Assembly Note

1. Hold the crankshaft using the **SST**.

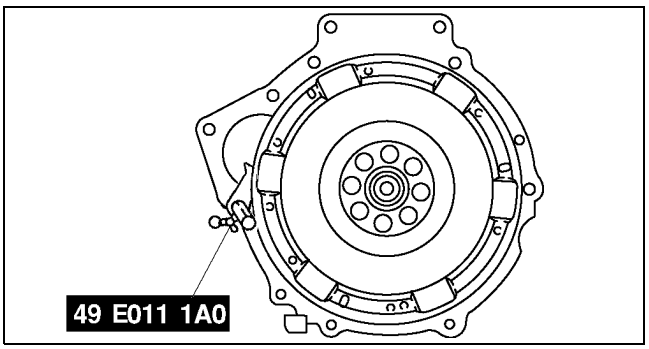

AME2524E065

2. Tighten the bolts in the order shown.

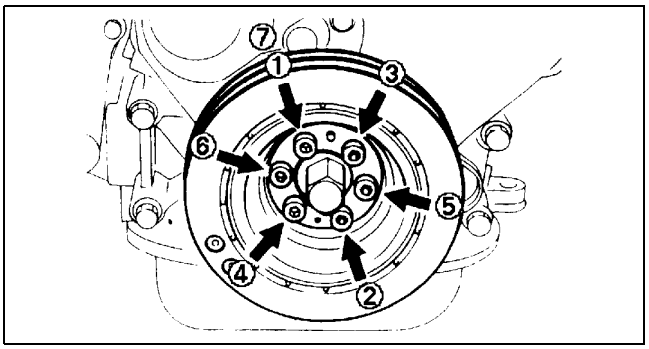

AME2524E013

TECHNICAL DATA

TECHNICAL DATA TD-2
ENGINE TD-2

TECHNICAL DATA

ENGINE

AME931001001101

Item			Specification
Cylinder head			
Valve clearance [Engine cold] (mm {in})		IN	0.12—0.18 {0.0048—0.0070} (0.15 ± 0.03 {0.0059 ± 0.0012})
		EX	0.32—0.38 {0.0126—0.0149} (0.35 ± 0.03 {0.0138 ± 0.0012})
Cylinder head gasket contact surfaces distortion (mm {in})		Maximum	X direction:0.01 {0.0004} Y direction:0.04 {0.0016}
Manifold contact surfaces direction (mm {in})		Maximum	0.06 {0.0024}
		Maximum grinding	0.20 {0.008}
Valve and valve guide			
Margin thickness (mm {in})		IN	0.8 {0.0315}
		EX	1.0 {0.0394}
Valve length (mm{in})	IN	Standard	115.01—115.51 {4.528—4.547}
		Minimum	114.785 {4.519}
	EX	Standard	114.35—114.85 {4.502—4.521}
		Minimum	114.125 {4.493}
Valve stem diameter (mm {in})	IN	Standard	5.970—5.985 {0.2351—0.2356}
		Minimum	5.920 {0.2331}
	EX	Standard	5.965—5.980 {0.2349—0.2354}
		Minimum	5.915 {0.2329}
Valve guide inner diameter (mm {in})			6.030—6.050 {0.2374—0.2381}
Valve guide protrusion height (mm {in})		IN	18.7—19.2 {0.737—0.755}
		EX	17.6—18.1 {0.693—0.712}
Valve seat contact width (mm {in})		IN	1.3—1.9 {0.052—0.074}
		EX	1.3—1.9 {0.052—0.074}
Valve seat angle		IN	45°
		EX	45°
Valve recession (mm{in})	IN	Standard	0.42—0.90 {0.017—0.035}
		Maximum	1.25 {0.049}
	EX	Standard	0.46—0.94 {0.019—0.037}
		Maximum	1.29 {0.051}
Valve spring			
Standard height (mm {in})		IN	38.0 {1.50}
		EX	38.0 {1.50}
Pressing force/height (N {kgf, lbf}/mm{in})		IN	172.1—194.9 {17.55—19.87,38.61—43.79}/38.0 {1.50}
		EX	172.1—194.9 {17.55—19.87,38.61—43.79}/38.0 {1.50}
Out-of-square (mm{in})		Maximum	1.55 {0.061}
Camshaft			
Runout (mm {in})		Maximum	0.03 {0.0012}
Cam lobe height (mm {in})	IN	Standard	40.140 {1.5803}
		Minimum	39.940 {1.5724}
	EX	Standard	39.809 {1.5673}
		Minimum	39.609 {1.5594}
Journal diameter (mm {in})		Standard	31.950—31.975 {1.2579—1.2588}
		Minimum	31.920 {1.2567}
Journal oil clearance (mm {in})		Standard	0.025—0.030 {0.0010—0.0011}
		Maximum	0.075 {0.0030}
End play (mm {in})		Standard	0.03—0.16 {0.0012—0.0062}
		Maximum	0.20 {0.0079}

Item			Specification
Cylinder block			
Cylinder head gasket contact surfaces distortion (mm {in})		Maximum	X direction: 0.01 {0.0004}
			Y direction: 0.03 {0.0012}
Cylinder bore diameter (mm {in})	Standard		86.000—86.022 {3.3859—3.3866}
	0.25 {0.01} oversize		86.250—86.272 {3.3957—3.3965}
	0.50 {0.02} oversize		86.500—86.522 {3.4055—3.4063}
Wear limit (mm {in})			0.15 {0.006}
Oil jet valve,nozzle			
Nozzle opening pressure (kPa{kgf/cm ^{2},psi})			138—196 {1.4—2.0,20—28}
Piston			
Piston diameter [Measured at 90° to pin bore axis and 10mm {0.39 in} above the bottom of piston] (mm {in})	Standard		85.973—86.015 {3.3848—3.3864}
	0.25 {0.01} oversize		86.223—86.265 {3.3946—3.3962}
	0.50 {0.02} oversize		86.473—86.515 {3.4045—3.4061}
Piston-to-cylinder clearance (mm {in})		Standard	0—0.034 {0—0.0013}
		Maximum	0.10 {0.0039}
Piston pin bore diameter (mm {in})			29.997—30.007 {1.1810—1.1813}
Piston ring			
Piston ring-to-ring groove clearance (mm {in})		Top	0.05—0.09 {0.0020—0.0035}
		Second	0.04—0.08 {0.0016—0.0031}
		Oil	0.03—0.07 {0.0012—0.0027}
		Maximum	0.15 {0.0059}
End gap [Measured in cylinder] (mm {in})		Top	0.20—0.30 {0.008—0.011}
		Second	0.20—0.30 {0.008—0.011}
		Oil	0.20—0.30 {0.008—0.011}
		Maximum	1.0 {0.039}
Piston pin			
Diameter (mm {in})			29.994—30.000 {1.1809—1.1811}
Connecting rod-to-piston pin clearance (mm {in})			0.014—0.036 {0.00056—0.00141}
Piston-to-piston pin clearance (mm {in})			-0.003—0.013 {-0.00011—0.00051}
Crankshaft			
Runout (mm {in})			0.03 {0.001}
Main journal diameter (mm {in}	Standard		59.937—59.955 {2.3598—2.3604}
	0.25{0.01} undersize		59.687—59.705 {2.3499—2.3505}
	0.50{0.02} undersize		59.437—59.455 {2.3401—2.3407}
	0.75{0.03} undersize		59.187—59.205 {2.3302—2.3309}
Out-of-round (mm {in})			0.03 {0.001}
Crank pin diameter mm {in})	Standard		50.940—50.955 {2.0056—2.0060}
	0.25{0.01} undersize		50.690—50.705 {1.9957—1.9962}
	0.50{0.02} undersize		50.440—50.455 {1.9859—1.9864}
	0.75{0.03} undersize		50.190—50.205 {1.9760—1.9765}
Out-of-round (mm {in})			0.03 {0.001}
Main journal oil clearance (mm {in})		Standard	0.025—0.044 {0.0010—0.0017}
		Maximum	0.08 {0.003}
Main journal brearing thickness (mm {in}	Standard		2.007—2.022 {0.0791—0.0796}
	0.25{0.01} undersize		2.129—2.139 {0.0839—0.0842}
	0.50{0.02} undersize		2.254—2.264 {0.0888—0.0891}
	0.75{0.03} undersize		2.379—2.389 {0.0937—0.0940}
Crankshaft end play (mm {in}		Standard	0.040—0.282 {0.00158—0.01110}
		Maximum	0.30 {0.012}
Trust bearing thickness (mm {in}	Standard		2.00—2.05 {0.0788—0.0807}
	0.35{0.01}undersize		2.175—2.225 {0.0857—0.0876}

Item			Specification
Connecting rod			
Small end inner diameter	(mm {in})		30.014—30.030 {1.1817—1.1822}
Length (Center to center)	(mm {in})		151.95—152.05 {5.983—5.986}
Bending	(mm {in})		0.080 {0.0031} max./50 {2.0}
Distortion	(mm {in})		0.080 {0.0031} max./50 {2.0}
Connecting rod bearing oil clearance	(mm {in})	Standard	0.027—0.055 {0.0011—0.0021}
		Maximum	0.10 {0.0039}
Connecting rod bearing thickness	(mm {in})	Standard	1.506—1.515 {0.0593—0.0596}
		0.25 {0.01}undersize	1.630—1.640 {0.0642—0.0645}
		0.50 {0.02}undersize	1.755—1.765 {0.0691—0.0694}
		0.75 {0.03}undersize	1.880—1.890 {0.0741—0.0744}
Connecting rod side clearance	(mm {in})	Standard	0.110—0.262 {0.0044—0.0103}
		Maximum	0.512 {0.0202}
Bolt			
Cylinder head bolt length	(mm {in})	Maximum	161.0 {6.338}
Timing belt auto tensioner			
Rod project ion[Free length]	(mm {in})		12.9—14.6 {0.508—0.574}
Oil pump			
Relief spring free length	(mm {in})		43.8 {1.724}
Inner rotor tooth tip to outer rotor clearance	(mm {in})	Standard	0.030—0.120 {0.0012—0.0047}
		Maximum	0.16 {0.006}
Outer rotor to body clearance	(mm {in})	Standard	0.200—0.294 {0.0079—0.0115}
		Maximum	0.35 {0.013}
Side clearance	(mm {in})	Standard	0.040—0.100 {0.0016—0.0039}
		Maximum	0.15 {0.0059}
Oil seal			
Camshaft oil seal tapping amount	(mm {in})		0.5—1.5 {0.020—0.059}
Rear oil seal tapping amount	(mm {in})		0—0.5 {0—0.019}
Front oil seal tapping amount	(mm {in})		0—0.5 {0—0.019}

SPECIAL TOOLS

SPECIAL TOOLS ST-2
ENGINE ST-2

SPECIAL TOOLS

ENGINE

AME941001001101

49 0107 680A Engine stand 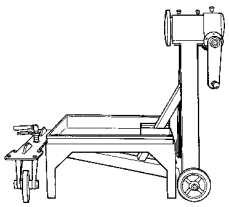	49 L010 1A0 Engine hanger set 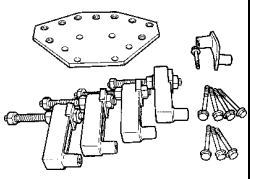	49 E011 1A0 Ring gear brake set 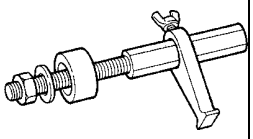
49 0636 100B Valve spring lifter arm 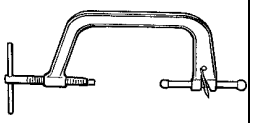	49 B012 0A2 Pivot 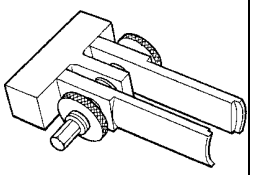	49 S120 170 Valve seal remover 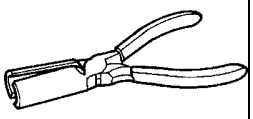
49 B012 005 Valve guide remover & installer 	49 L012 0A0B Valve seal & valve guide installer set 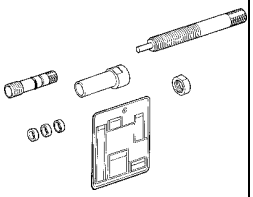	49 S120 215B Pulley puller 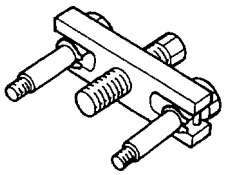
49 G011 001 Piston pin replacer 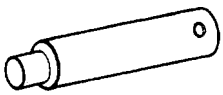	49 G011 106 Camshaft pulley puller 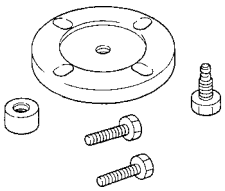	49 S120 710 Coupling flange holder 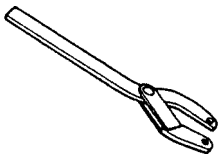
49 G033 107A Dust cover installer 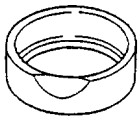	49 B010 002 Oil seal installer 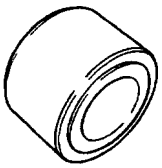	49 1285 071 Bearing puller 
49 U027 003 Oil seal installer 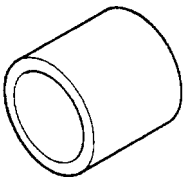	49 G012 0A0 Tappet adjust wrench set 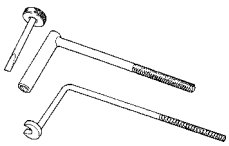	49 G030 797 Handle (Part of 49 G030 795) 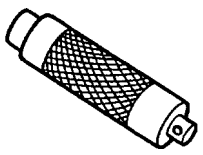
49 G028 201 Support block 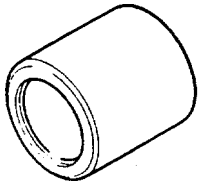	49 E027 002 Attachment 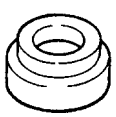	–

Manual Transaxle Workshop Manual A65M–R

FOREWORD

This manual explains the structure, operation, and service points for the above-indicated manual transaxle. In order to do these procedures safely, quickly, and correctly, you must first read this manual and any other relevant service materials carefully.

The information in this manual is current up to April, 2002. Any changes that occur after that time will not be reflected in this particular manual. Therefore, the contents of this manual may not exactly match the mechanism that you are currently servicing.

Mazda Motor Corporation
HIROSHIMA, JAPAN

CONTENTS

Title	Section
General Information	GI
Overhaul	J
Technical Data	TD
Special Tools	ST

© 2002 Mazda Motor Corporation
PRINTED IN THE NETHERLANDS, APRIL 2002
1739–1E–02D

WARNING

Servicing a vehicle can be dangerous. If you have not received service-related training, the risks of injury, property damage, and failure of servicing increase. The recommended servicing procedures for the vehicle in this workshop manual were developed with Mazda-trained technicians in mind. This manual may be useful to non-Mazda trained technicians, but a technician with our service-related training and experience will be at less risk when performing service operations. However, all users of this manual are expected to at least know general safety procedures.

This manual contains "Warnings" and "Cautions" applicable to risks not normally encountered in a general technician's experience. They should be followed to reduce the risk of injury and the risk that improper service or repair may damage the vehicle or render it unsafe. It is also important to understand that the "Warnings" and "Cautions" are not exhaustive. It is impossible to warn of all the hazardous consequences that might result from failure to follow the procedures.

The procedures recommended and described in this manual are effective methods of performing service and repair. Some require tools specifically designed for a specific purpose. Persons using procedures and tools which are not recommended by Mazda Motor Corporation must satisfy themselves thoroughly that neither personal safety nor safety of the vehicle will be jeopardized.

The contents of this manual, including drawings and specifications, are the latest available at the time of printing, and Mazda Motor Corporation reserves the right to change the vehicle designs and alter the contents of this manual without notice and without incurring obligation.

Parts should be replaced with genuine Mazda replacement parts or with parts which match the quality of genuine Mazda replacement parts. Persons using replacement parts of lesser quality than that of genuine Mazda replacement parts must satisfy themselves thoroughly that neither personal safety nor safety of the vehicle will be jeopardized.

Mazda Motor Corporation is not responsible for any problems which may arise from the use of this manual. The cause of such problems includes but is not limited to insufficient service-related training, use of improper tools, use of replacement parts of lesser quality than that of genuine Mazda replacement parts, or not being aware of any revision of this manual.

GENERAL INFORMATION

HOW TO USE THIS MANUAL GI-2
RANGE OF TOPICS GI-2
SERVICING PROCEDURE GI-2
SYMBOLS GI-3
ADVISORY MESSAGES GI-4
UNITS GI-5
UNITS TABLE GI-5
FUNDAMENTAL PROCEDURES GI-6
PREPARATION OF TOOLS AND MEASURING EQUIPMENT GI-6
SPECIAL SERVICE TOOLS GI-6
DISASSEMBLY GI-6
INSPECTION DURING REMOVAL, DISASSEMBLY GI-6
ARRANGEMENT OF PARTS GI-7
CLEANING OF PARTS GI-7
REASSEMBLY GI-7
ADJUSTMENT GI-8
RUBBER PARTS AND TUBING GI-8
HOSE CLAMPS GI-8
TORQUE FORMULAS GI-8
VISE GI-9
ELECTRICAL SYSTEM GI-9
CONNECTORS GI-9
NEW STANDARDS GI-12
NEW STANDARDS TABLE GI-12
ABBREVIATIONS GI-14
ABBREVIATIONS TABLE GI-14

HOW TO USE THIS MANUAL

RANGE OF TOPICS

AME201000001M01

- This manual contains procedures for performing all required service operations. The procedures are divided into the following five basic operations:
  - — Removal/Installation
  - — Disassembly/Assembly
  - — Replacement
  - — Inspection
  - — Adjustment
- Simple operations which can be performed easily just by looking at the vehicle (i.e., removal/installation of parts, jacking, vehicle lifting, cleaning of parts and visual inspection) have been omitted.

SERVICING PROCEDURE

AME201000001M02

Inspection, Adjustment

- Inspection and adjustment procedures are divided into steps. Important points regarding the location and contents of the procedures are explained in detail and shown in the illustrations.

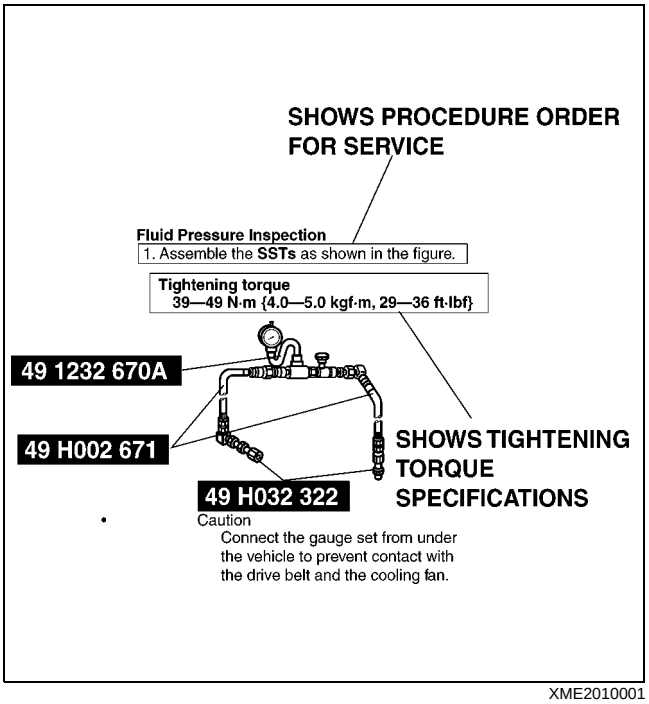

XME2010001

Repair Procedure

1. Most repair operations begin with an overview illustration. It identifies the components, shows how the parts fit together, and describes visual part inspection. However, only removal/installation procedures that need to be performed methodically have written instructions.
2. Expendable parts, tightening torques, and symbols for oil, grease, and sealant are shown in the overview illustration. In addition, symbols indicating parts requiring the use of special service tools or equivalent are also shown.

3. Procedure steps are numbered and the part that is the main point of the procedure is shown in the illustration with the corresponding number. Occasionally, there are important points or additional information concerning a procedure. Refer to this information when servicing the related part.

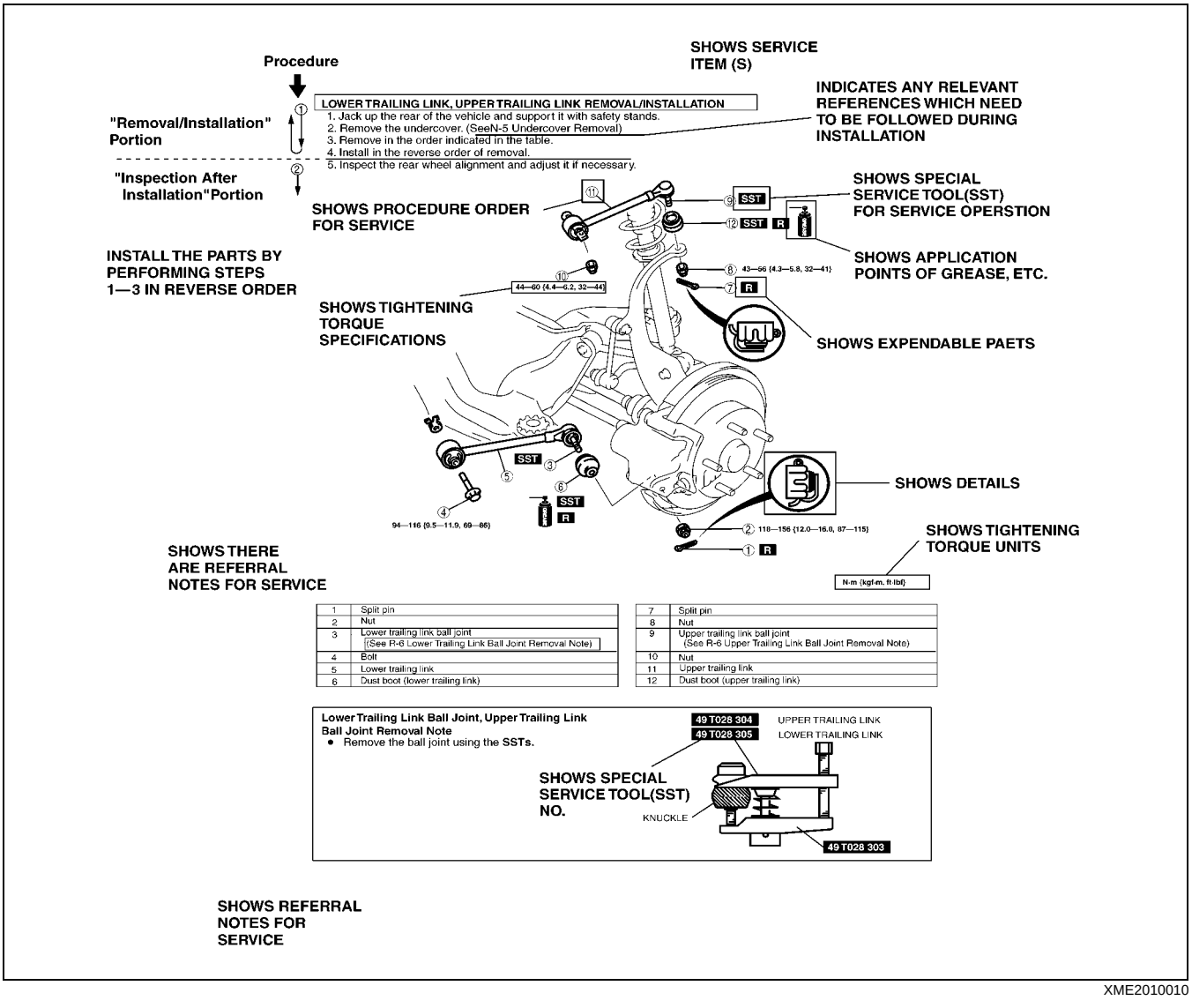

XME2010010

SYMBOLS

AME201000001M03

- There are eight symbols indicating oil, grease, fluids, sealant, and the use of **SST** or equivalent. These symbols show application points or use of these materials during service.

Symbol	Meaning	Kind
	Apply oil	New appropriate engine oil or gear oil
	Apply brake fluid	New appropriate brake fluid
	Apply automatic transaxle/transmission fluid	New appropriate automatic transaxle/transmission fluid

Symbol	Meaning	Kind
	Apply grease	Appropriate grease
	Apply sealant	Appropriate sealant
	Apply petroleum jelly	Appropriate petroleum jelly
	Replace part	O-ring, gasket, etc.
	Use SST or equivalent	Appropriate tools

ADVISORY MESSAGES

AME201000001M04

- You will find several **Warnings**, **Cautions**, **Notes**, **Specifications** and **Upper and Lower Limits** in this manual.

Warning
- A Warning indicates a situation in which serious injury or death could result if the warning is ignored.

Caution
- A Caution indicates a situation in which damage to the vehicle or parts could result if the caution is ignored.

Note
- A Note provides added information that will help you to complete a particular procedure.

Specifications
- The values indicate the allowable range when performing inspections or adjustments.

Upper and Lower Limits
- The values indicate the upper and lower limits that must not be exceeded when performing inspections or adjustments.

UNITS

UNITS TABLE

AME201200002M01

Electrical current	A (ampere)
Electric power	W (watt)
Electric resistance	ohm
Electric voltage	V (volt)
Length	mm (millimeter)
	in (inch)
Negative pressure	kPa (kilo pascal)
	mmHg (millimeters of mercury)
	inHg (inches of mercury)
Number of revolutions	rpm (revolutions per minute)
Positive pressure	kPa (kilo pascal)
	kgf/cm^2 (kilogram force per square centimeter)
	psi (pounds per square inch)
Torque	N·m (Newton meter)
	kgf·m (kilogram force meter)
	kgf·cm (kilogram force centimeter)
	ft·lbf (foot pound force)
	in·lbf (inch pound force)
Volume	L (liter)
	US qt (U.S. quart)
	imp qt (Imperial quart)
	ml (milliliter)
	cc (cubic centimeter)
	cu in (cubic inch)
	fl oz (fluid ounce)
Weight	N (Newton)
	g (gram)
	oz (ounce)

Conversion to SI Units (Système International d'Unités)

- All numerical values in this manual are based on SI units. Numbers shown in conventional units are converted from these values.

Rounding Off

- Converted values are rounded off to the same number of places as the SI unit value. For example, if the SI unit value is 17.2 and the value after conversion is 37.84, the converted value will be rounded off to 37.8.

Upper and Lower Limits

- When the data indicates upper and lower limits, the converted values are rounded down if the SI unit value is an upper limit and rounded up if the SI unit value is a lower limit. Therefore, converted values for the same SI unit value may differ after conversion. For example, consider 2.7 kgf/cm^2 in the following specifications:

  210—260 kPa {2.1—2.7 kgf/cm^2, 30—38 psi}
  270—310 kPa {2.7—3.2 kgf/cm^2, 39—45 psi}

- The actual converted values for 2.7 kgf/cm^2 are 265 kPa and 38.4 psi. In the first specification, 2.7 is used as an upper limit, so the converted values are rounded down to 260 and 38. In the second specification, 2.7 is used as a lower limit, so the converted values are rounded up to 270 and 39.

FUNDAMENTAL PROCEDURES

PREPARATION OF TOOLS AND MEASURING EQUIPMENT

- Be sure that all necessary tools and measuring equipment are available before starting any work.

AME201400004M01

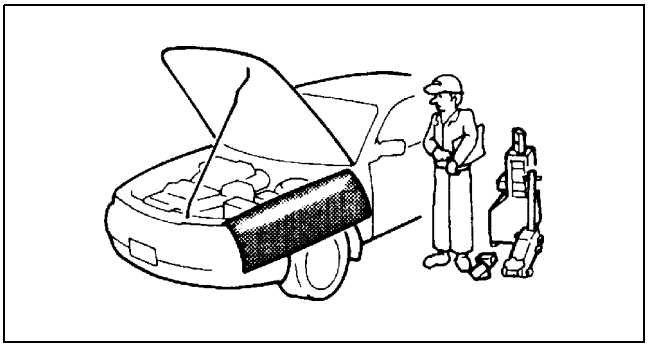

WGIWXX0023E

SPECIAL SERVICE TOOLS

- Use special service tools or equivalent when they are required.

AME201400004M02

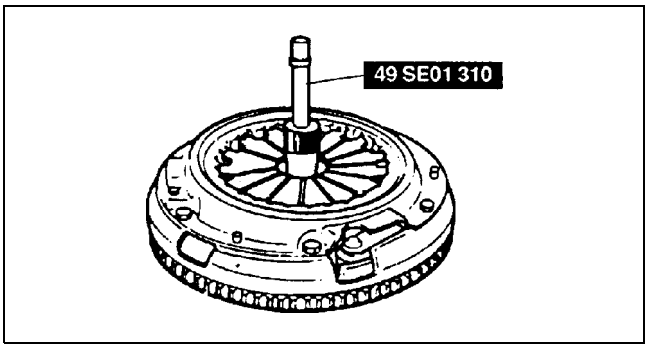

WGIWXX0024E

DISASSEMBLY

- If the disassembly procedure is complex, requiring many parts to be disassembled, all parts should be marked in a place that will not affect their performance or external appearance and identified so that reassembly can be performed easily and efficiently.

AME201400004M03

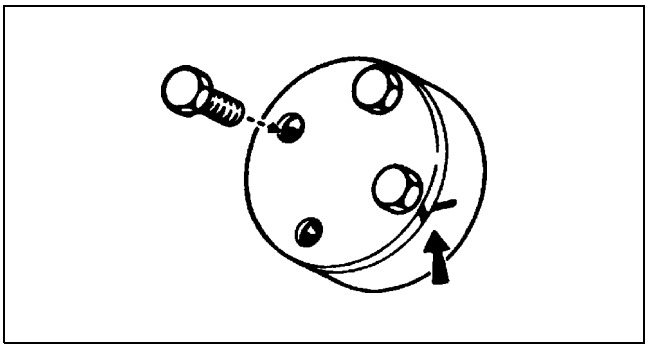

WGIWXX0027E

INSPECTION DURING REMOVAL, DISASSEMBLY

- When removed, each part should be carefully inspected for malfunction, deformation, damage, and other problems.

AME201400004M04

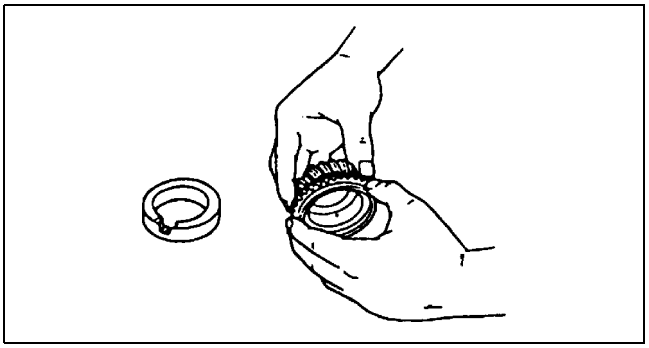

WGIWXX0028E

ARRANGEMENT OF PARTS

- All disassembled parts should be carefully arranged for reassembly.
- Be sure to separate or otherwise identify the parts to be replaced from those that will be reused.

AME201400004M05

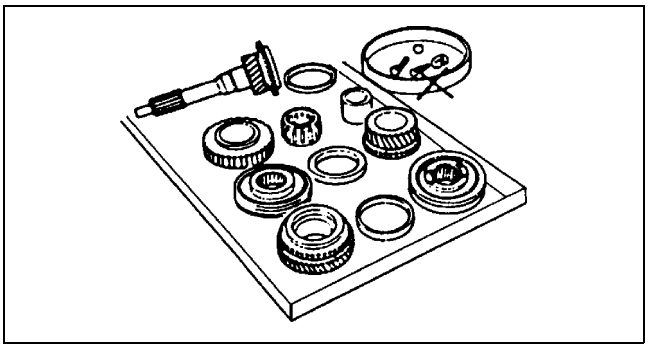

WGIWXX0029E

CLEANING OF PARTS

- All parts to be reused should be carefully and thoroughly cleaned in the appropriate method.

  Warning
  - **Using compressed air can cause dirt and other particles to fly out causing injury to the eyes. Wear protective eye wear whenever using compressed air.**

AME201400004M06

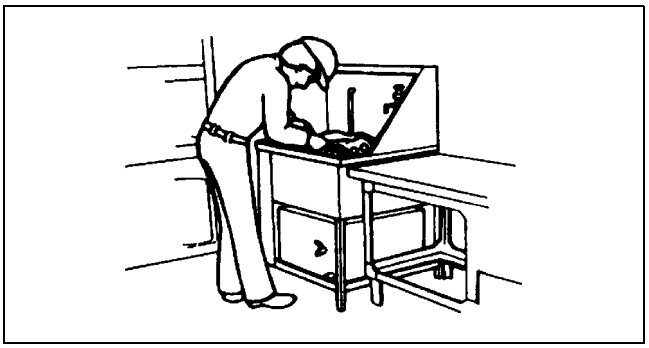

WGIWXX0030E

REASSEMBLY

- Standard values, such as torques and certain adjustments, must be strictly observed in the reassembly of all parts.
- If removed, these parts should be replaced with new ones:
  - — Oil seals
  - — Gaskets
  - — O-rings
  - — Lockwashers
  - — Cotter pins
  - — Nylon nuts

AME201400004M07

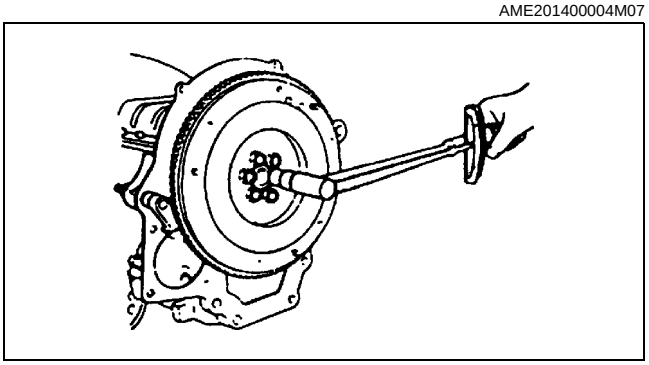

WGIWXX0031E

- Depending on location:
  - — Sealant and gaskets, or both, should be applied to specified locations. When sealant is applied, parts should be installed before sealant hardens to prevent leakage.
  - — Oil should be applied to the moving components of parts.
  - — Specified oil or grease should be applied at the prescribed locations (such as oil seals) before reassembly.

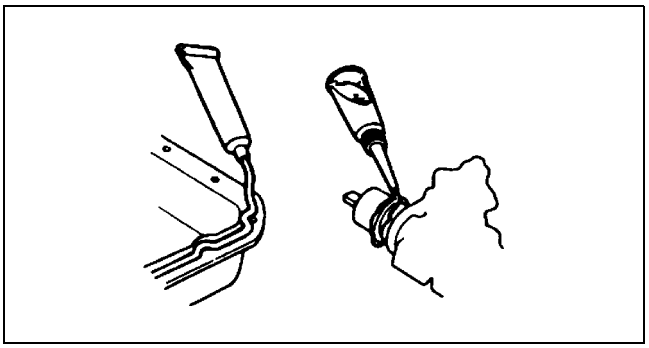

WGIWXX0032E

ADJUSTMENT

- Use suitable gauges and/or testers when making adjustments.

AME201400004M08

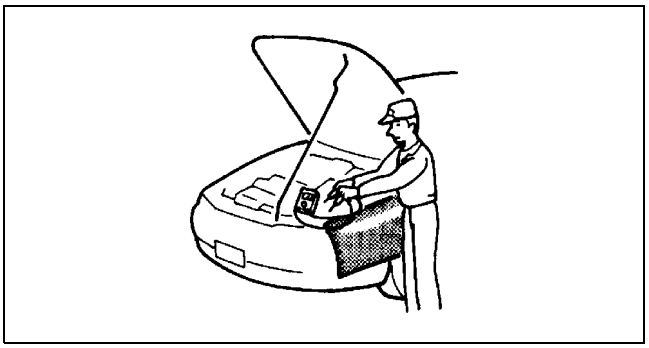

WGIWXX0033E

RUBBER PARTS AND TUBING

- Prevent gasoline or oil from getting on rubber parts or tubing.

AME201400004M09

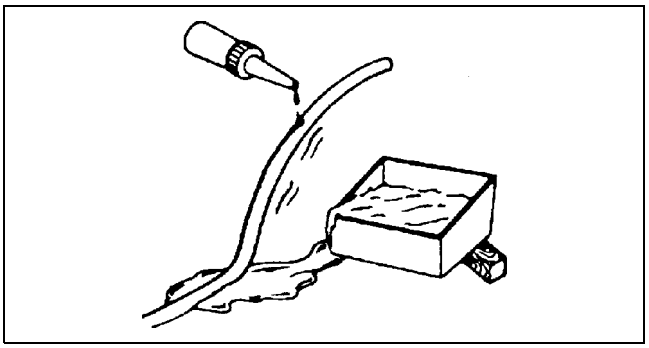

WGIWXX0034E

HOSE CLAMPS

- When reinstalling, position the hose clamp in the original location on the hose and squeeze the clamp lightly with large pliers to ensure a good fit.

AME201400004M10

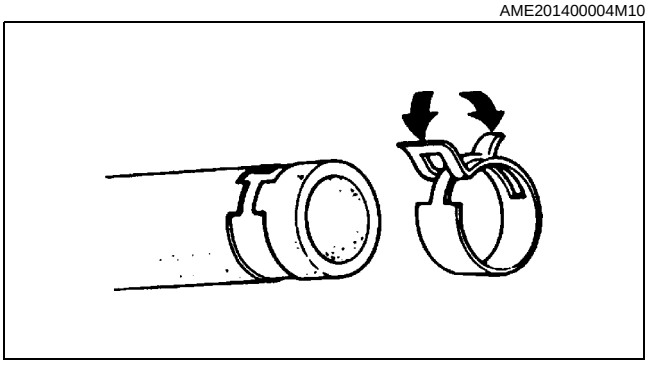

WGIWXX0035E

TORQUE FORMULAS

- When using a torque wrench-SST or equivalent combination, the written torque must be recalculated due to the extra length that the SST or equivalent adds to the torque wrench. Recalculate the torque using the following formulas. Choose the formula that applies to you.

Torque Unit	Formula
N·m	N·m × [L/(L+A)]
kgf·m	kgf·m × [L/(L+A)]
kgf·cm	kgf·cm × [L/(L+A)]
ft·lbf	ft·lbf × [L/(L+A)]
in·lbf	in·lbf × [L/(L+A)]

A : The length of the **SST** past the torque wrench drive
L : The length of the torque wrench

AME201400004M11

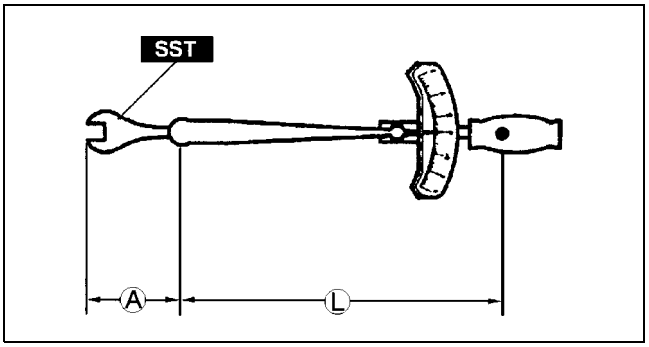

WGIWXX0036E

VISE

- When using a vise, put protective plates in the jaws of the vise to prevent damage to parts.

AME201400004M12

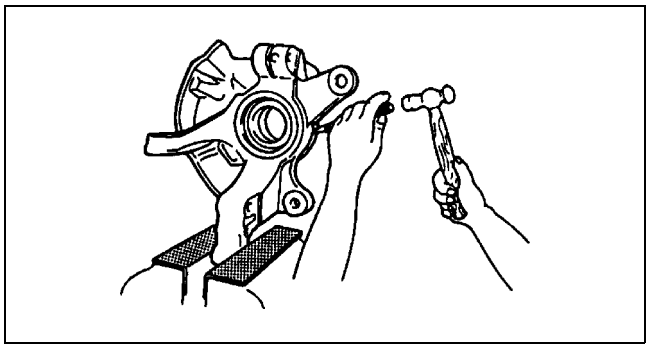

WGIWXX0037E

ELECTRICAL SYSTEM

CONNECTORS

AME201700006M01

Data Link Connector

- Insert the probe into the service hole when connecting a jumper wire to the data link connector.

Caution

- **Inserting a jumper wire probe into the data link connector terminal may damage the terminal.**

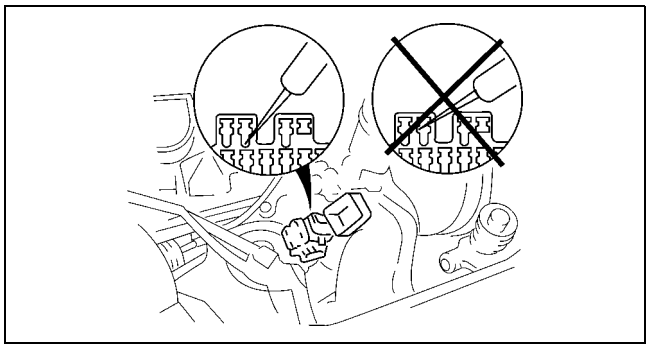

X3U000WAY

Disconnecting Connectors

- When disconnecting connector, grasp the connectors, not the wires.

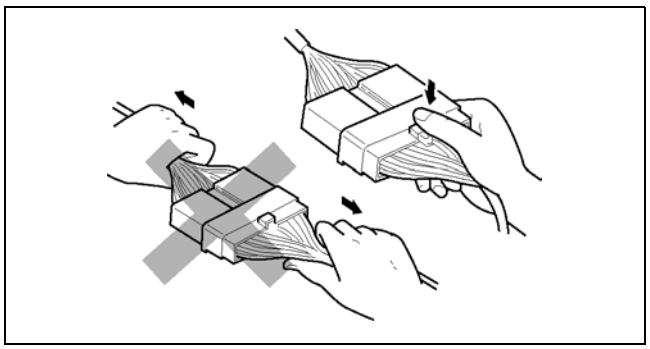

WGIWXX0041E

- Connectors can be disconnected by pressing or pulling the lock lever as shown.

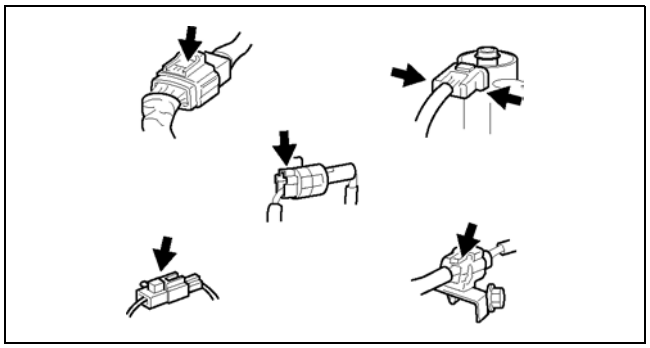

WGIWXX0042E

Locking Connector

- When locking connectors, listen for a click indicating they are securely locked.

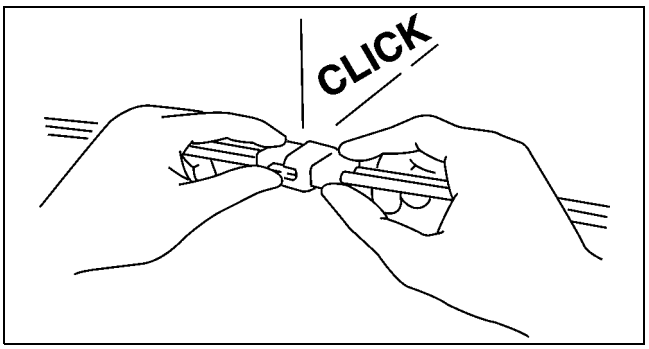

X3U000WB1

Inspection

- When a tester is used to inspect for continuity or measuring voltage, insert the tester probe from the wiring harness side.

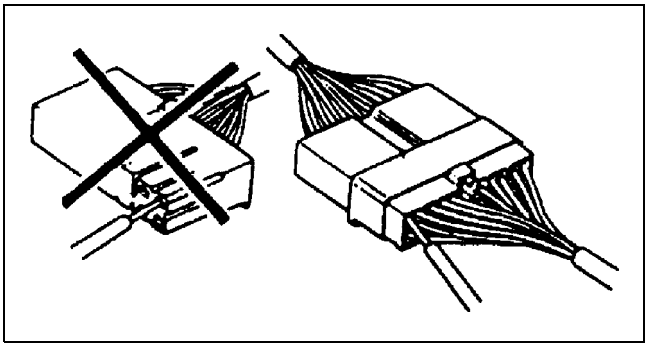

WGIWXX0044E

- Inspect the terminals of waterproof connectors from the connector side since they cannot be accessed from the wiring harness side.

  Caution
  - **To prevent damage to the terminal, wrap a thin wire around the tester probe before inserting into terminal.**

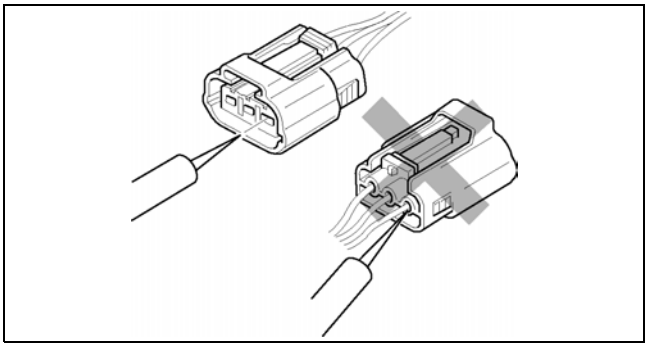

WGIWXX0045E

Terminals
Inspection

- Pull lightly on individual wires to verify that they are secured in the terminal.

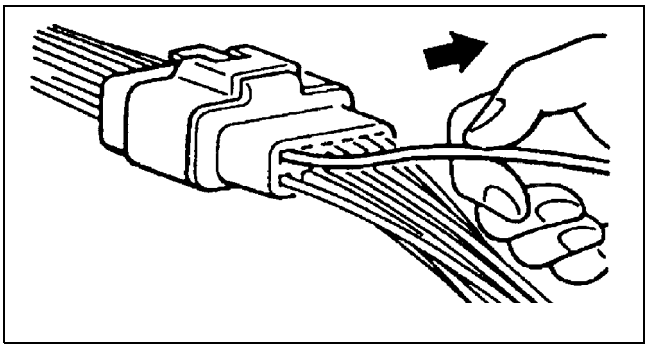

WGIWXX0064E

Replacement

- Use the appropriate tools to remove a terminal as shown. When installing a terminal, be sure to insert it until it locks securely.
- Insert a thin piece of metal from the terminal side of the connector and with the terminal locking tab pressed down, pull the terminal out from the connector.

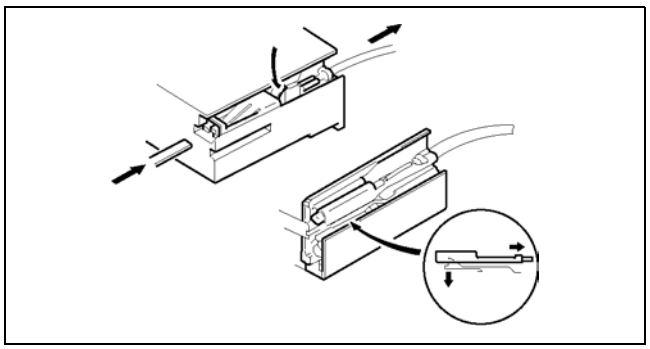

WGIWXX0046E

Sensors, Switches, and Relays

- Handle sensors, switches, and relays carefully. Do not drop them or strike them against other objects.

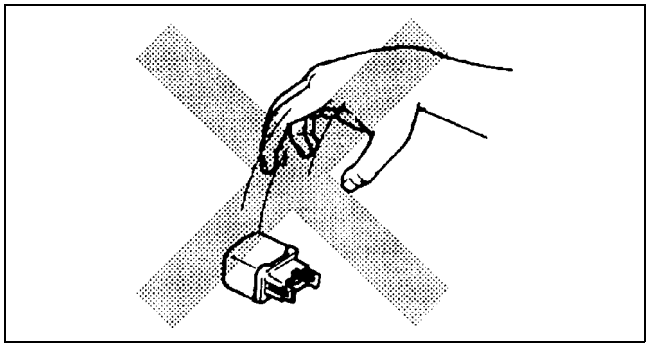

WGIWXX0047E

Wiring Harness

Wiring color codes

- Two-color wires are indicated by a two-color code symbol.
- The first letter indicates the base color of the wire and the second the color of the stripe.

CODE	COLOR	CODE	COLOR
B	Black	O	Orange
BR	Brown	P	Pink
G	Green	R	Red
GY	Gray	V	Violet
L	Blue	W	White
LB	Light Blue	Y	Yellow
LG	Light Green		

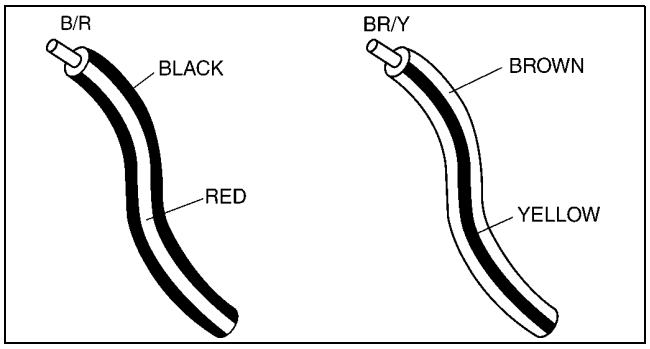

X3U000WB7

NEW STANDARDS

NEW STANDARDS TABLE

AME202800020M01

- Following is a comparison of the previous standard and the new standard.

New Standard		Previous Standard		Remark
Abbreviation	Name	Abbreviation	Name	
AP	Accelerator Pedal	—	Accelerator Pedal	
ACL	Air Cleaner	—	Air Cleaner	
A/C	Air Conditioning	—	Air Conditioning	
BARO	Barometric Pressure	—	Atmospheric Pressure	
B+	Battery Positive Voltage	V_B	Battery Voltage	
—	Brake Switch	—	Stoplight Switch	
—	Calibration Resistor	—	Corrected Resistance	#6
CMP sensor	Camshaft Position Sensor	—	Crank Angle Sensor	
CAC	Charge Air Cooler	—	Intercooler	
CLS	Closed Loop System	—	Feedback System	
CTP	Closed Throttle Position	—	Fully Closed	
CPP	Clutch Pedal Position	—	Idle Switch	
CIS	Continuous Fuel Injection System	—	Clutch Position	
CS sensor	Control Sleeve Sensor	CSP sensor	Control Sleeve Position Sensor	#6
CKP sensor	Crankshaft Position Sensor	—	Crank Angle Sensor 2	
DLC	Data Link Connector	—	Diagnosis Connector	
DTM	Diagnostic Test Mode	—	Test Mode	#1
DTC	Diagnostic Trouble Code(s)	—	Service Code(s)	
DI	Distributor Ignition	—	Spark Ignition	
DLI	Distributorless Ignition	—	Direct Ignition	
EI	Electronic Ignition	—	Electronic Spark Ignition	#2
ECT	Engine Coolant Temperature	—	Water Thermo	
EM	Engine Modification	—	Engine Modification	
—	Engine Speed Input Signal	—	Engine RPM Signal	
EVAP	Evaporative Emission	—	Evaporative Emission	
EGR	Exhaust Gas Recirculation	—	Exhaust Gas Recirculation	
FC	Fan Control	—	Fan Control	
FF	Flexible Fuel	—	Flexible Fuel	
4GR	Fourth Gear	—	Overdrive	
—	Fuel Pump Relay	—	Circuit Opening Relay	#3
FSO solenoid	Fuel Shut Off Solenoid	FCV	Fuel Cut Valve	#6
GEN	Generator	—	Alternator	
GND	Ground	—	Ground/Earth	
HO2S	Heated Oxygen Sensor	—	Oxygen Sensor	With heater
IAC	Idle Air Control	—	Idle Speed Control	
—	IDM Relay	—	Spill Valve Relay	#6
—	Incorrect Gear Ratio	—	—	
—	Injection Pump	FIP	Fuel Injection Pump	#6
—	Input/Turbine Speed Sensor	—	Pulse Generator	
IAT	Intake Air Temperature	—	Intake Air Thermo	
KS	Knock Sensor	—	Knock Sensor	
MIL	Malfunction Indicator Lamp	—	Malfunction Indicator Light	
MAP	Manifold Absolute Pressure	—	Intake Air Pressure	
MAF sensor	Mass Air Flow Sensor	—	Airflow Sensor	
MFL	Multiport Fuel Injection	—	Multiport Fuel Injection	
OBD	On-Board Diagnostic	—	Diagnosis/Self Diagnosis	
OL	Open Loop	—	Open Loop	

NEW STANDARDS

New Standard		Previous Standard		Remark
Abbreviation	Name	Abbreviation	Name	
—	Output Speed Sensor	—	Vehicle Speed Sensor 1	
OC	Oxidation Catalytic Converter	—	Catalytic Converter	
O2S	Oxygen Sensor	—	Oxygen Sensor	
PNP	Park/Neutral Position	—	Park/Neutral Range	
—	PCM Control Relay	—	Main Relay	#6
PSP	Power Steering Pressure	—	Power Steering Pressure	
PCM	Powertrain Control Module	ECU	Engine Control Unit	#4
—	Pressure Control Solenoid	—	Line Pressure Solenoid Valve	
PAIR	Pulsed Secondary Air Injection	—	Secondary Air Injection System	Pulsed injection
—	Pump Speed Sensor	—	NE Sensor	#6
AIR	Secondary Air Injection	—	Secondary Air Injection System	Injection with air pump
SAPV	Secondary Air Pulse Valve	—	Reed Valve	
SFI	Sequential Multipoint Fuel Injection	—	Sequential Fuel Injection	
—	Shift Solenoid A	—	1-2 Shift Solenoid Valve	
		—	Shift A Solenoid Valve	
—	Shift Solenoid B	—	2-3 Shift Solenoid Valve	
		—	Shift B Solenoid Valve	
—	Shift Solenoid C	—	3-4 Shift Solenoid Valve	
3GR	Third Gear	—	3rd Gear	
TWC	Three Way Catalytic Converter	—	Catalytic Converter	
TB	Throttle Body	—	Throttle Body	
TP sensor	Throttle Position Sensor	—	Throttle Sensor	
TCV	Timer Control Valve	TCV	Timing Control Valve	#6
TCC	Torque Converter Clutch	—	Lockup Position	
TCM	Transmission (Transaxle) Control Module	—	ECAT Control Unit	
—	Transmission (Transaxle) Fluid Temperature Sensor	—	ATF Thermosensor	
TR	Transmission (Transaxle) Range	—	Inhibitor Position	
TC	Turbocharger	—	Turbocharger	
VSS	Vehicle Speed Sensor	—	Vehicle Speed Sensor	
VR	Voltage Regulator	—	IC Regulator	
VAF sensor	Volume Air Flow Sensor	—	Air flow Sensor	
WUTWC	Warm Up Three Way Catalytic Converter	—	Catalytic Converter	#5
WOT	Wide Open Throttle	—	Fully Open	

#1 : Diagnostic trouble codes depend on the diagnostic test mode
#2 : Controlled by the PCM
#3 : In some models, there is a fuel pump relay that controls pump speed. That relay is now called the fuel pump relay (speed).
#4 : Device that controls engine and powertrain
#5 : Directly connected to exhaust manifold
#6 : Part name of diesel engine

ABBREVIATIONS

ABBREVIATIONS TABLE

AME203000011M01

SST	Special service tool

OVERHAUL

J

MANUAL TRANSAXLE J-2
- PRECAUTION J-2
- CLUTCH HOUSING AND TRANSAXLE CASE COMPONENTS DISASSEMBLY J-3
- PRIMARY SHAFT COMPONENTS PREINSPECTION J-8
- PRIMARY SHAFT COMPONENTS DISASSEMBLY J-9
- PRIMARY SHAFT COMPONENTS INSPECTION J-11
- PRIMARY SHAFT COMPONENTS ASSEMBLY J-13
- SECONDARY SHAFT COMPONENTS PREINSPECTION J-18
- SECONDARY SHAFT COMPONENTS DISASSEMBLY J-19
- SECONDARY SHAFT COMPONENTS INSPECTION J-20
- SECONDARY SHAFT COMPONENTS ASSEMBLY J-24
- REVERSE IDLER SHAFT COMPONENTS DISASSEMBLY/ASSEMBLY J-30
- REVERSE IDLER SHAFT COMPONENTS INSPECTION J-31
- DIFFERENTIAL PREINSPECTION J-32
- DIFFERENTIAL DISASSEMBLY J-32
- DIFFERENTIAL ASSEMBLY J-33
- PRIMARY SHAFT END PLAY ADJUSTMENT .. J-35
- SECONDARY SHAFT END PLAY ADJUSTMENT J-36
- REVERSE IDLER GEAR END PLAY ADJUSTMENT J-37
- DIFFERENTIAL SIDE BEARING PRELOAD ADJUSTMENT J-38
- CLUTCH HOUSING AND TRANSAXLE CASE COMPONENTS ASSEMBLY J-40

MANUAL TRANSAXLE

PRECAUTION

AME511201029M09

1. Clean the transaxle exterior thoroughly using a steam cleaner or cleaning solvents before disassembly.

Warning

- **Using compressed air can cause dirt and other particles to fly out, causing injury to the eyes. Wear protective eye wear whenever using compressed air.**

Caution

- **Cleaning sealed bearings using cleaning fluids or a steam cleaner can wash the grease out of the bearing.**

2. Clean the removed parts using cleaning solvent, and dry them using compressed air.
3. Clean out all holes and passages using compressed air, and check that there are no obstructions.
4. Use a plastic hammer when disassembling the transaxle case and other light alloy metal parts.
5. Make sure each part is cleaned before assembling.
6. Coat all movable parts with the specified oil.
7. Replace parts whenever required.
8. Remove old sealant from contact surfaces before applying new sealant.
9. Assemble the parts within **10 minutes** after applying sealant. Allow all sealant to cure at least **30 minutes** after assembly before filling the transaxle with transaxle oil.

Warning

- **Although the stand has a self-locking brake system, there is a possibility that the brake may not hold when the transaxle is held in a lopsided position on the stand. This would cause the transaxle to turn suddenly, causing serious injury. Never keep the transaxle tilted to one side. Always hold the rotating handle firmly when turning the transaxle.**

CLUTCH HOUSING AND TRANSAXLE CASE COMPONENTS DISASSEMBLY

AME511217010M01

Disassembly Components

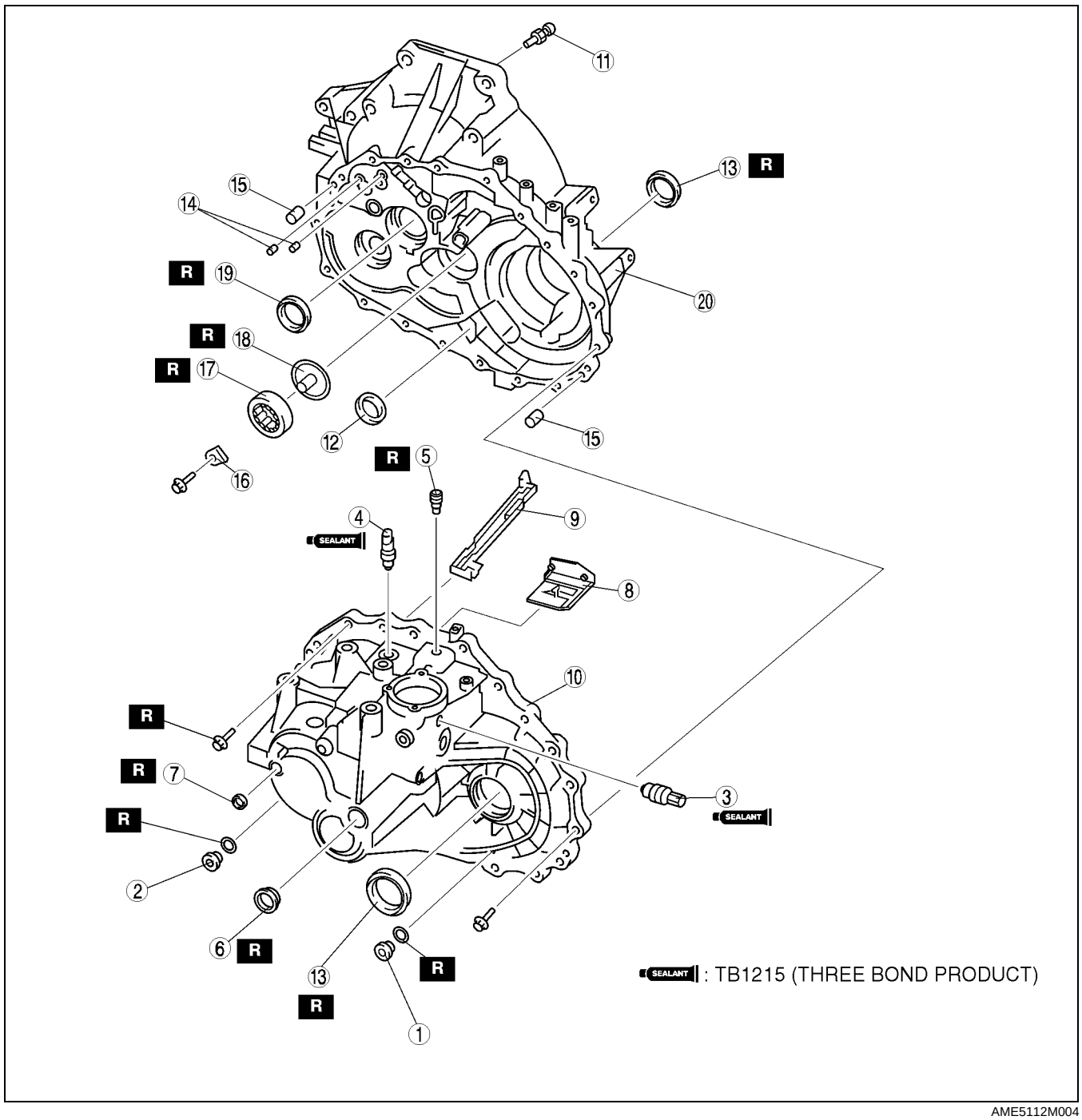

AME5112M004

1	Drain plug
2	Filler cap
3	Neutral switch
4	Reverse switch
5	Air-bleed plug
6	Bore plug
7	Welt plug
8	Baffle plate
9	Oil pass
10	Transaxle case

11	Pivot pin
12	Magnet
13	Differential oil seal
14	Knock pin
15	Dowel pin
16	Secondary shaft bearing retainer
17	Secondary shaft front bearing
18	Oil channel
19	Primary shaft oil seal
20	Clutch housing

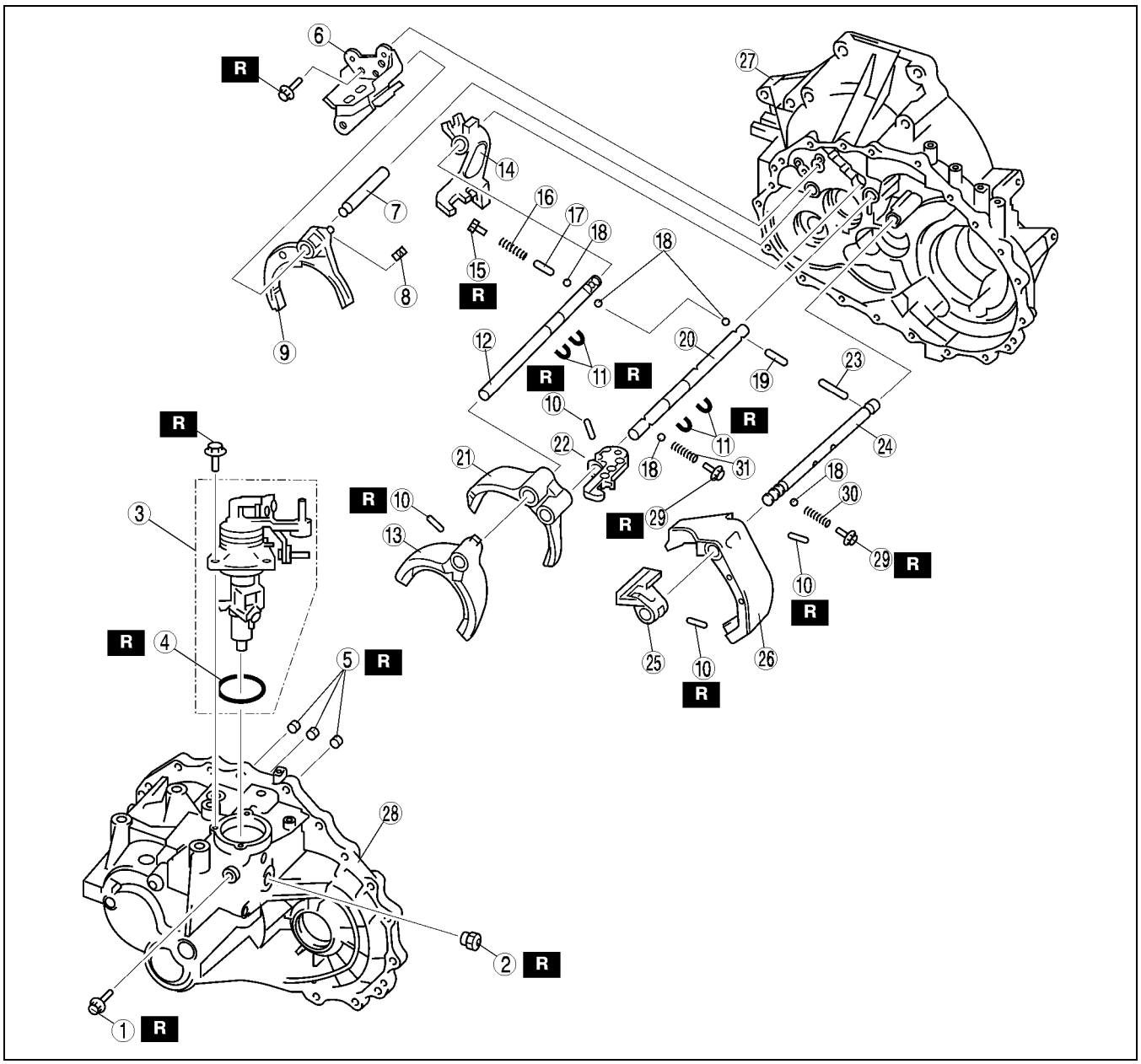

AME5112M097

1	Stopper bolt
2	Shift check bolt
3	Shift control component
4	O ring
5	Rod bushing
6	Reverse lever component
7	Reverse fork rod
8	Cap
9	Reverse shift fork
10	Retaining pin
11	C ring
12	5th/Reverse fork rod
13	5th shift fork
14	5th/reverse bracket
15	Check plug (5th/reverse)
16	Check spring (5th/reverse)

17	Shift check sleeve (5th/reverse)
18	Check ball
19	Inter lock pin
20	3rd/4th fork rod
21	3rd/4th shift fork
22	3rd/4th bracket
23	Shift check sleeve (1st/2nd)
24	1st/2nd fork rod
25	1st/2nd bracket
26	1st/2nd shift fork
27	Clutch housing
28	Transaxle case
29	Check plug (1st/2nd, 3rd/4th)
30	Check spring (1st/2nd)
31	Check spring (3rd/4th)

Disassembly Procedure

1. Remove the drain plug and the filler cap.
2. Remove the neutral switch and reverse switch.
3. Remove the shift check bolt and stopper bolt.
4. Remove the shift control component.

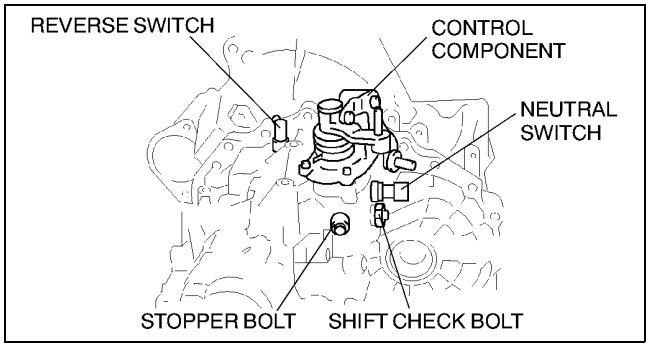

AME5112M098

5. Remove the check plugs, check springs, check balls, and shift check sleeve as shown in the figure.

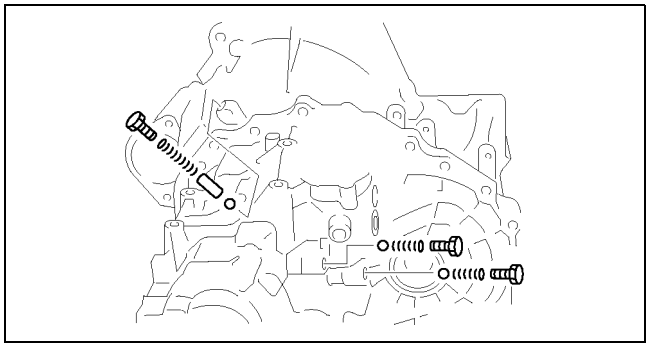

AME5112M142

6. Remove the transaxle case installation bolt.
7. Remove the bore plug using screwdriver.
8. Stretch the snap ring of the secondary shaft rear bearing at the bore plug hole, and remove the transaxle case.
9. Remove the baffle plate and the oil pass.
10. Remove the snap ring, secondary shaft adjust shim, primary shaft rear bearing adjust shim from the transaxle case.

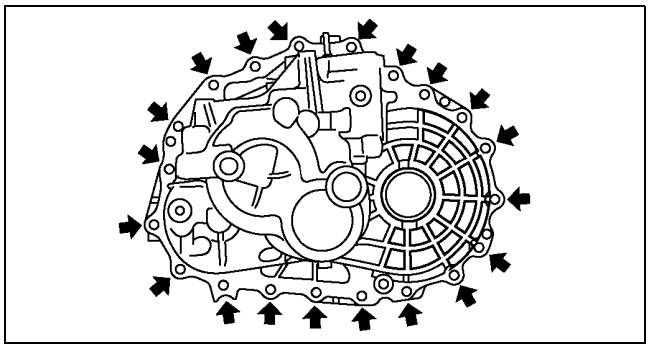

AME5112M007

11. Remove the differential side bearing outer race (transaxle case side) using the **SST**, and remove the adjust shim.

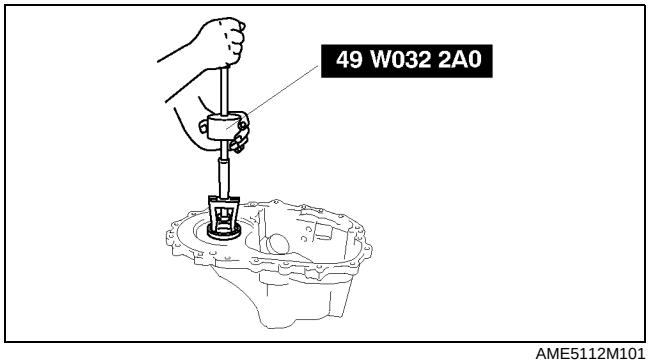

AME5112M101

12. Remove the welt plug using a fit stick.
13. Remove the differential oil seal (transaxle case side) using a screwdriver.
14. Remove the magnet from clutch housing.
15. Shift to 5th gear.

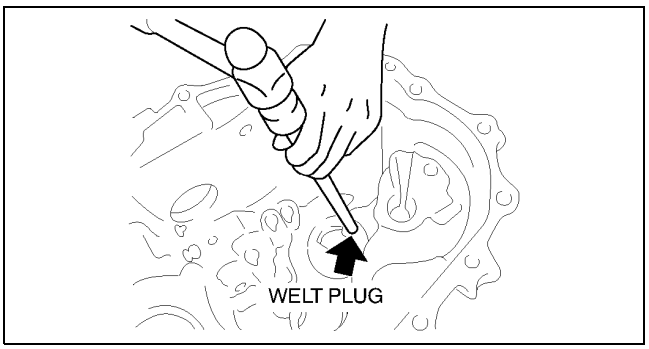

AME5112M008

16. Remove the reverse lever component bracket bolt.
17. Lift the reverse lever component, and remove it.
18. Remove the reverse fork rod.
19. Remove the reverse shift fork.

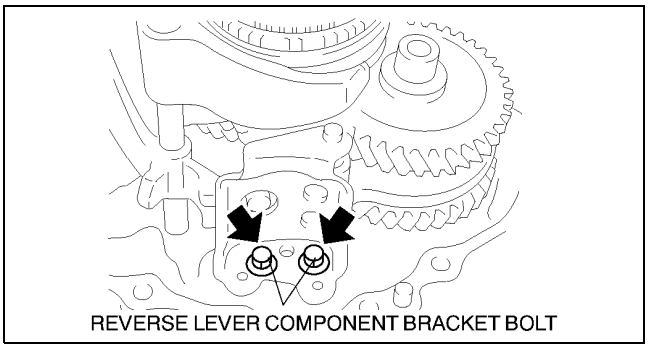

AME5112M009

20. Shift 3rd/4th fork rod to the 3rd gear, and remove the retaining pin of 5th shift fork using a pin punch.

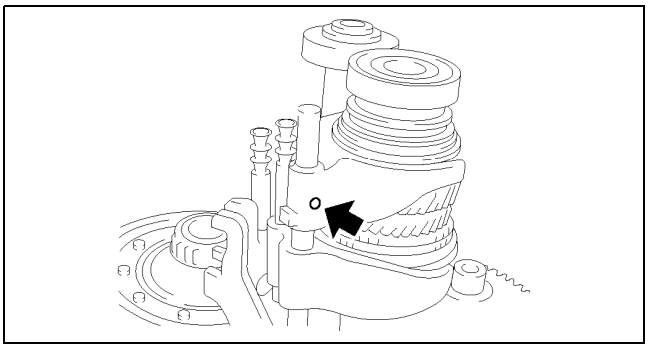
AME5112M010

21. Remove the C ring of the 5th/reverse bracket.
22. Remove the 5th/reverse fork rod, and remove the 5th shift fork and 5th/reverse bracket.
23. Remove the check balls and the interlock pin from the clutch housing.

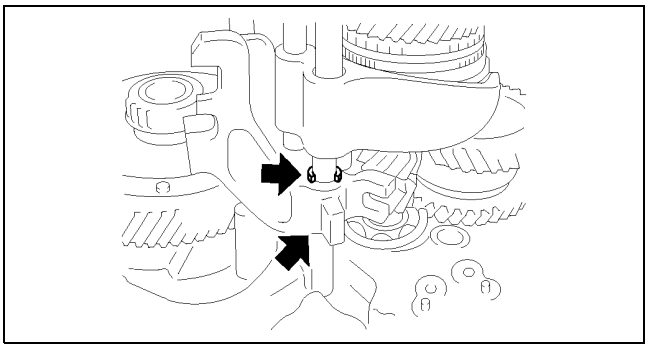
AME5112M011

24. Remove the retaining pin of 3rd/4th fork rod bracket using a pin punch.
25. Remove the two C rings of the 3rd/4th shift fork.
26. Remove the 3rd/4th fork rod, and remove the 3rd/4th shift fork and 3rd/4th bracket.
27. Remove the shift check sleeve from the clutch housing.

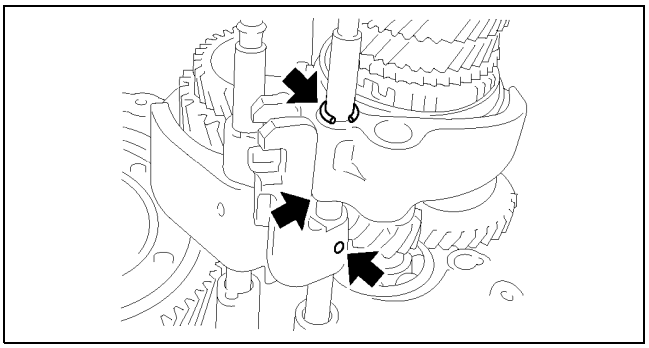
AME5112M012

28. Remove the retaining pin of 1st/2nd shift fork using a pin punch.
29. Remove the 1st/2nd fork rod and 1st/2nd bracket at a time.
30. Remove the 1st/2nd shift fork.
31. Remove the retaining pin of the 1st/2nd bracket using a pin punch, and remove the 1st/2nd bracket from the 1st/2nd fork rod.

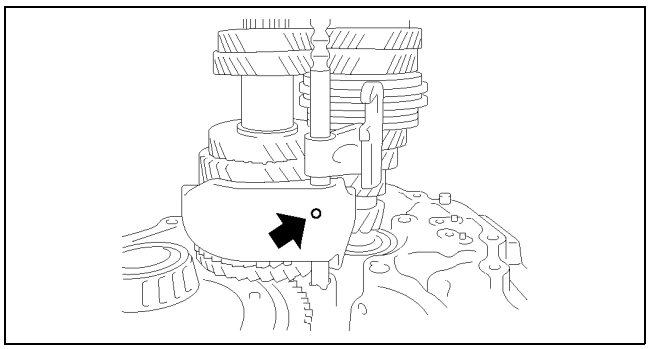

AME5112M013

32. Remove each gear component.
    (1) Tap the primary shaft using a plastic hammer.

Caution
- **The oil channel in the clutch housing can be damaged when removing the secondary shaft component. Remove the secondary shaft component to right above.**

    (2) Remove the primary shaft component, secondary shaft component, and reverse idler gear component at the same time.
    (3) Remove the differential.

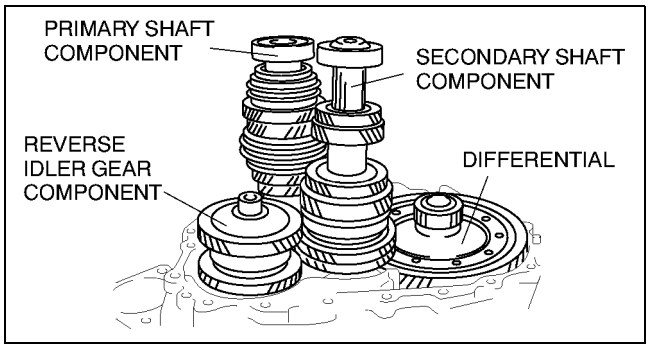

AME5112M014

33. Remove the secondary shaft bearing retainer.

Warning
- **Using a heat gun can will cause the clutch housing to heat up greatly. To prevent burns wear gloves whenever using a heat gun.**

Caution
- **The clutch housing will be damaged if heated above 120 °C. Heat the clutch housing below 120 °C.**

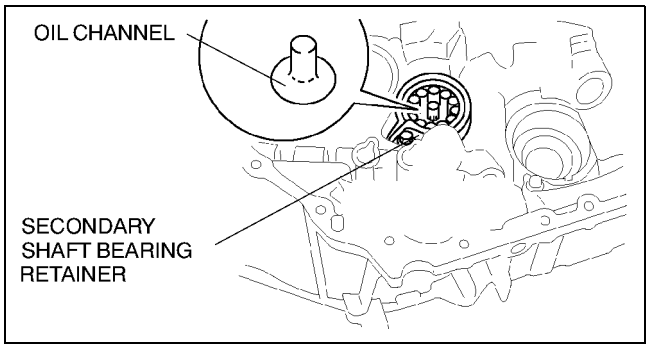

AME5112M015

Note
- If the secondary shaft front bearing can't be removed easily, heat the clutch housing to about 100 °C using a heat gun and remove it.

34. Remove the secondary shaft front bearing using a screwdriver.
35. Remove the oil channel of the secondary shaft.
36. Remove the differential oil seal (clutch housing side) using a screwdriver.

Warning
- **Using a heat gun will cause the clutch housing to heat up greatly. To prevent burns wear gloves whenever using a heat gun.**

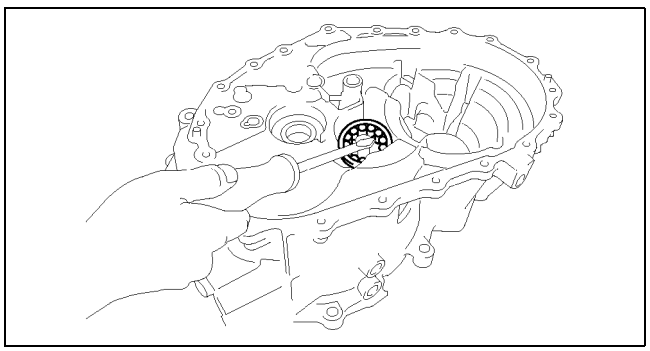

AME5112M074

Caution
- **The clutch housing will be damaged if heated above 120 °C. Heat the clutch housing below 120 °C.**

Note
- If the differential side bearing outer race can't be removed easily, heat the clutch housing to about 100 °C using a heat gun and remove it.

37. Remove the differential side bearing outer race using the **SST**.

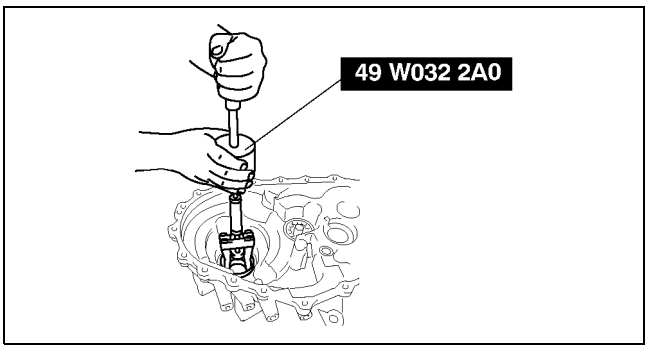

AME5112M102

38. Remove the primary shaft oil seal using a screwdriver.

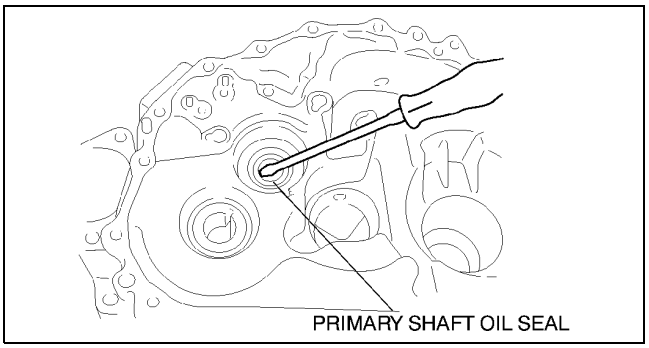

AME5112M016

PRIMARY SHAFT COMPONENTS PREINSPECTION

AME511217201M01

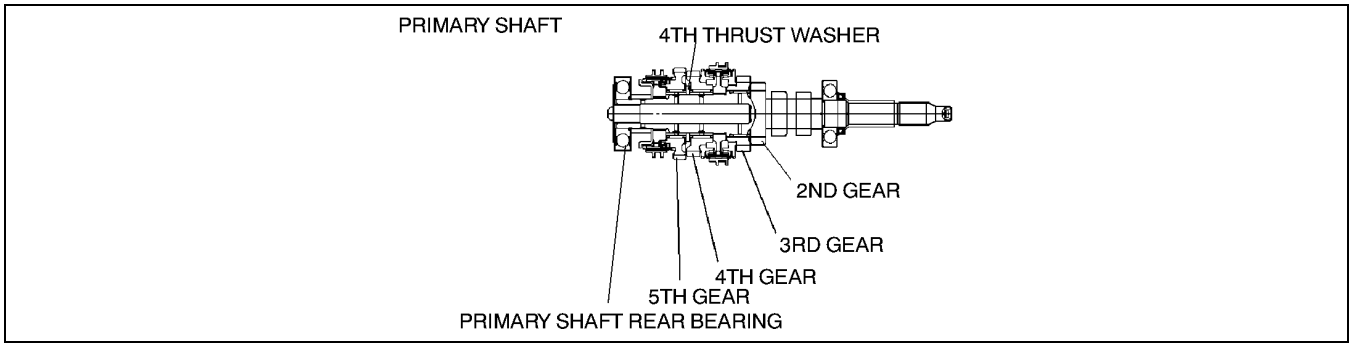

AME5112M093

3rd Gear Thrust Clearance

1. Measure the clearance between the 3rd gear and 2nd gear.
   - If not as specified, assemble the primary shaft component again.

Clearance
0.18—0.31 mm {0.0071—0.0122 in}

5th Gear Thrust Clearance

1. Measure the clearance between 4th thrust washer and the 5th gear.
   - If not as specified, assemble the primary shaft component again.

Clearance
0.06—0.16 mm {0.0024—0.0063 in}

4th Gear End Play

1. Remove the primary shaft rear bearing.
2. Set up the primary shaft component, and fix it.
3. Slide the 4th gear up and down, and measure the length of the movement.
   - If not as specified, assemble the primary shaft component again.

Length of the movement
0.20—0.30 mm {0.0078—0.0118 in}

PRIMARY SHAFT COMPONENTS DISASSEMBLY

AME511217201M02

1. Disassemble in the order shown in the figure.

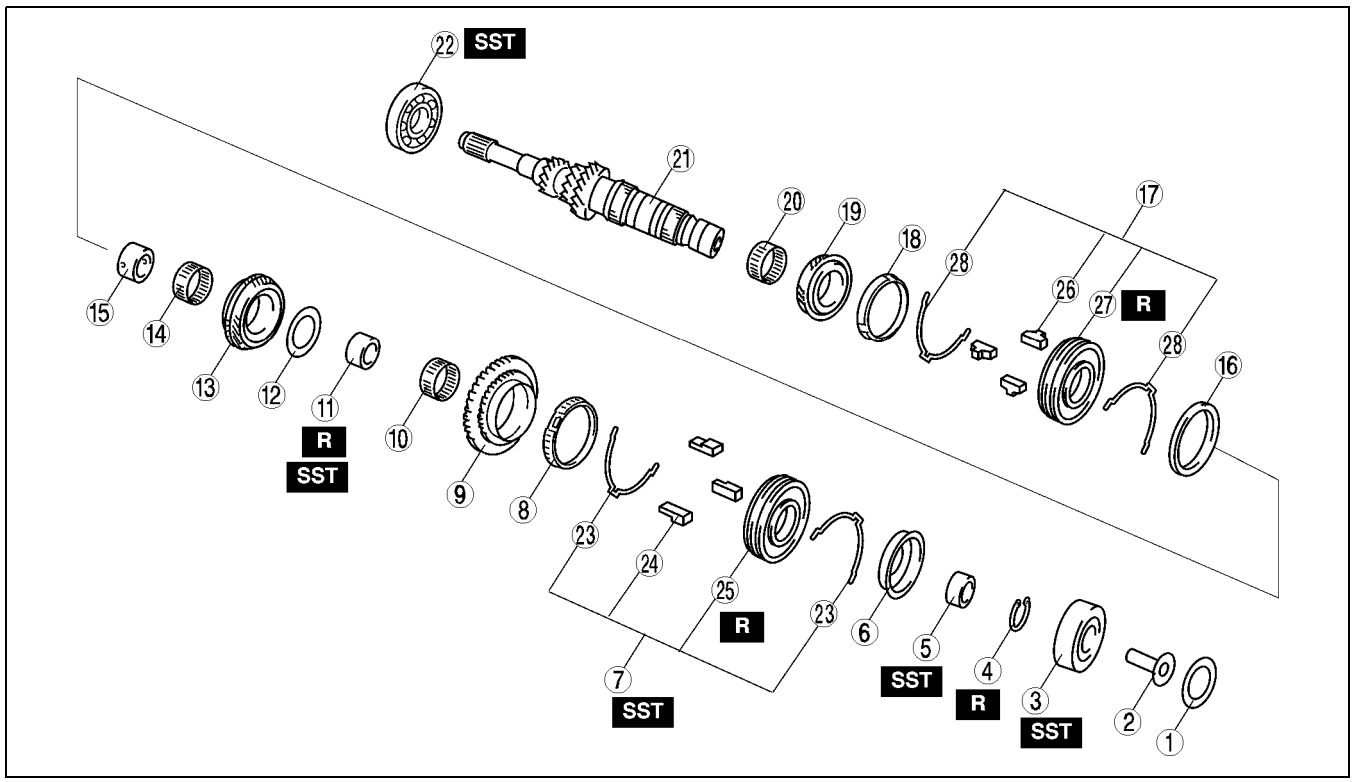

AME5112M095

1	Primary shaft rear bearing adjust shim
2	Oil channel
3	Primary shaft rear bearing (See J–10 Primary Shaft Rear Bearing Disassembly Note)
4	Snap ring
5	Primary shaft bearing spacer (See J–10 Primary Shaft Bearing Spacer and 5th Gear Stopper Disassembly Note)
6	5th gear stopper
7	5th clutch hub set (See J–10 5th Clutch Hub Set, 5th Synchronizer Ring and 5th Gear Disassembly Note)
8	5th synchronizer ring
9	5th gear
10	5th needle bearing
11	5th bushing (See J–10 5th Bushing, Thrust Washer, 4th Gear, 4th Needle Bearing, 4th Bushing, 4th Synchronizer Ring, 3rd/4th Clutch Hub Set, 3rd Synchronizer Ring and 3rd Gear Disassembly Note)
12	Thrust washer
13	4th gear

14	4th needle bearing
15	4th bushing
16	4th synchronizer ring
17	3rd/4th clutch hub set
18	3rd synchronizer ring
19	3rd gear
20	3rd needle bearing
21	Primary shaft
22	Primary shaft front bearing (See J–11 Primary Shaft Front Bearing Disassembly Note)
23	Synchronizer key spring (5th)
24	5th synchronizer key
25	5th clutch hub and sleeve
26	3rd/4th synchronizer key
27	3rd/4th clutch hub and sleeve
28	Synchronizer key spring (3rd/4th)

Primary Shaft Rear Bearing Disassembly Note

1. Remove the bearing using the **SSTs**.

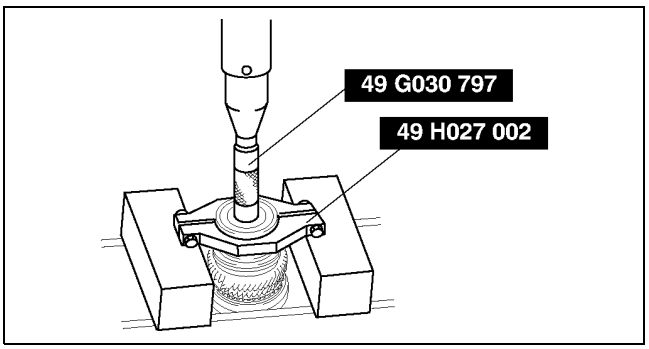

AME5112M103

Primary Shaft Bearing Spacer and 5th Gear Stopper Disassembly Note

1. Remove the primary shaft bearing spacer and 5th gear stopper at the same time using the **SSTs**.

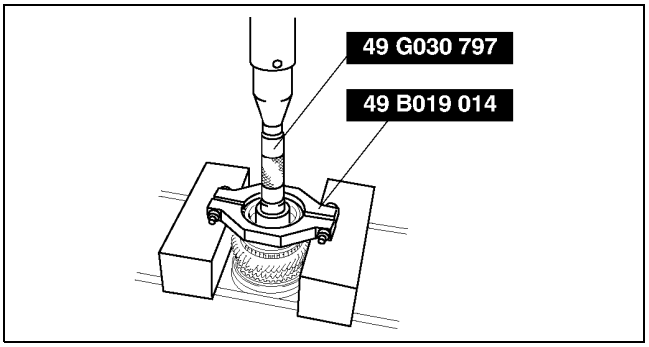

AME5112M106

5th Clutch Hub Set, 5th Synchronizer Ring and 5th Gear Disassembly Note

1. Remove the 5th clutch hub set, 5th synchronizer ring and 5th gear at the same time using the **SSTs**.

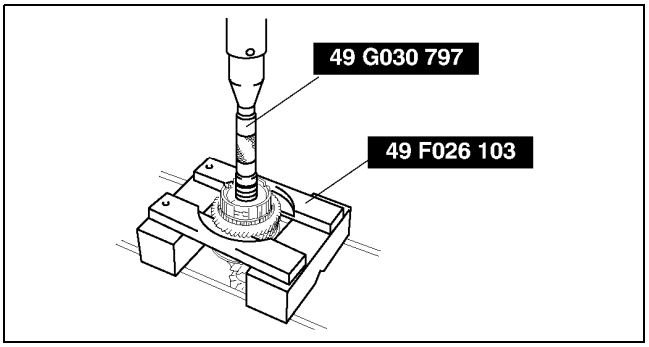

AME5112M108

5th Bushing, Thrust Washer, 4th Gear, 4th Needle Bearing, 4th Bushing, 4th Synchronizer Ring, 3rd/4th Clutch Hub Set, 3rd Synchronizer Ring and 3rd Gear Disassembly Note

1. Remove the 5th bushing, thrust washer, 4th gear, 4th needle bearing, 4th bushing, 4th synchronizer ring, 3rd/4th clutch hub set, 3rd synchronizer ring and 3rd gear at the same time using the **SSTs**.

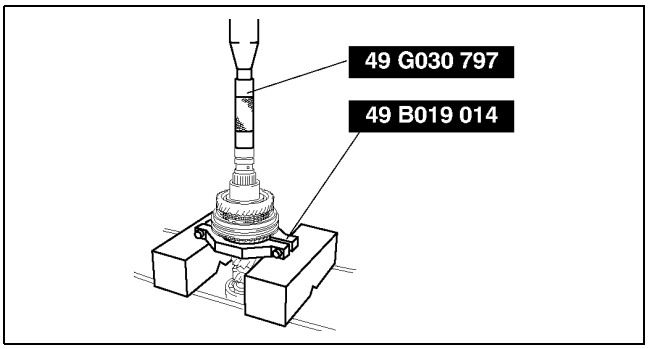

AME5112M109

Primary Shaft Front Bearing Disassembly Note

1. Remove the primary shaft front bearing using the **SST**.

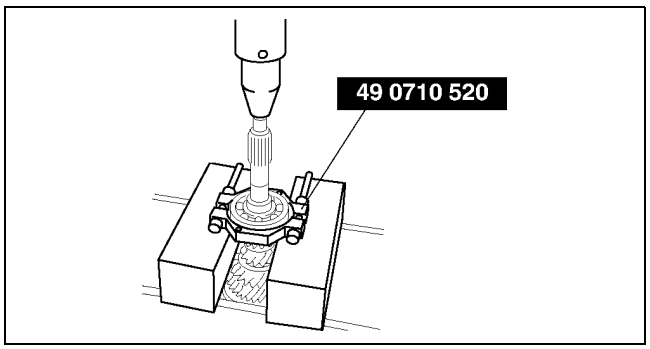

AME5112M107

PRIMARY SHAFT COMPONENTS INSPECTION

AME511217201M03

Primary Shaft and Gear Inspection

1. Inspect the shaft for damage, abnormal wear, dents, flaking, or bending.
   - If there is malfunction, replace the shaft.
2. Inspect the gears for damage, abnormal wear, dents, flaking, or bending.
   - If there is malfunction, replace the gear.
3. Inspect the oil passage for clogging.
   - If there is malfunction, replace the shaft.

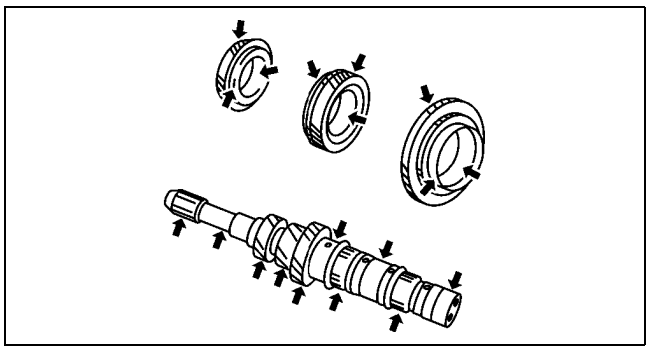

AME5112M044

Synchronizer Ring and Clutch Hub Component Inspection

1. Inspect the clutch hub sleeve, clutch hub, and synchronizer key contact surface for damage and abnormal wear.
   - If there is malfunction, replace the part where necessary.
2. Verify that the clutch hub sleeve and clutch hub for move smoothly.
   - If there is malfunction, replace parts as necessary.

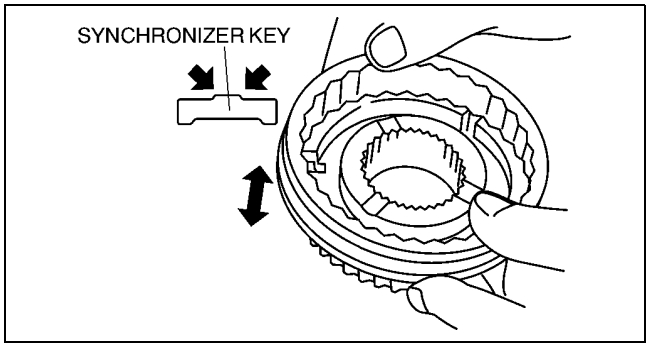

AME5112M045

3. Inspect the synchronizer ring teeth and grooves for damage, abnormal wear, and cracks.
   - If there is malfunction, replace the synchronizer ring.
4. Inspect the tapered surface for abnormal wear and cracks.
   - If there is malfunction, replace parts as necessary.

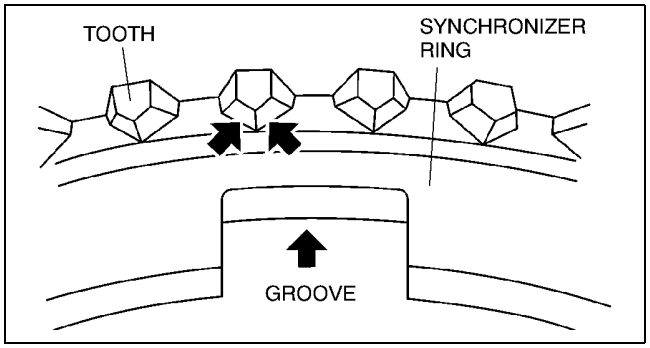

AME5112M046

5. Measure the clearance between the synchronizer ring and the flank surface of the gear.
   - If not as specified, replace the synchronizer ring.

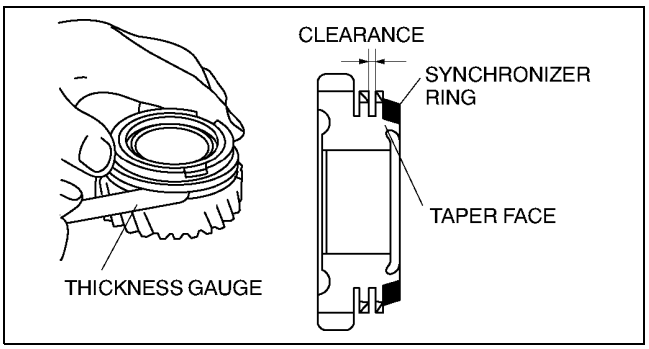

AME5112M070

Note
- Set the synchronizer ring squarely in the gear; then measure around the circumference.

Standard clearance
3rd: 0.90—1.45 mm {0.035—0.057 in}
4th: 0.90—1.45 mm {0.035—0.057 in}
5th: 0.95—1.40 mm {0.037—0.055 in}
Minimum clearance
0.70 mm {0.028 in}

Bearing Inspection

1. Inspect the ball and the ball contact surface for damage and abnormal wear.
   - If there is malfunction, replace the bearing.
2. Verify that the bearing to rotates smoothly.
   - If there is malfunction, replace the bearing.

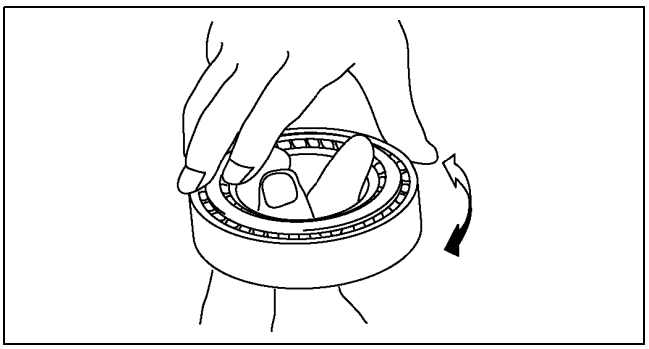
AME5112M072

PRIMARY SHAFT COMPONENTS ASSEMBLY

AME511217201M04

1. Assemble in the order shown in the figure.

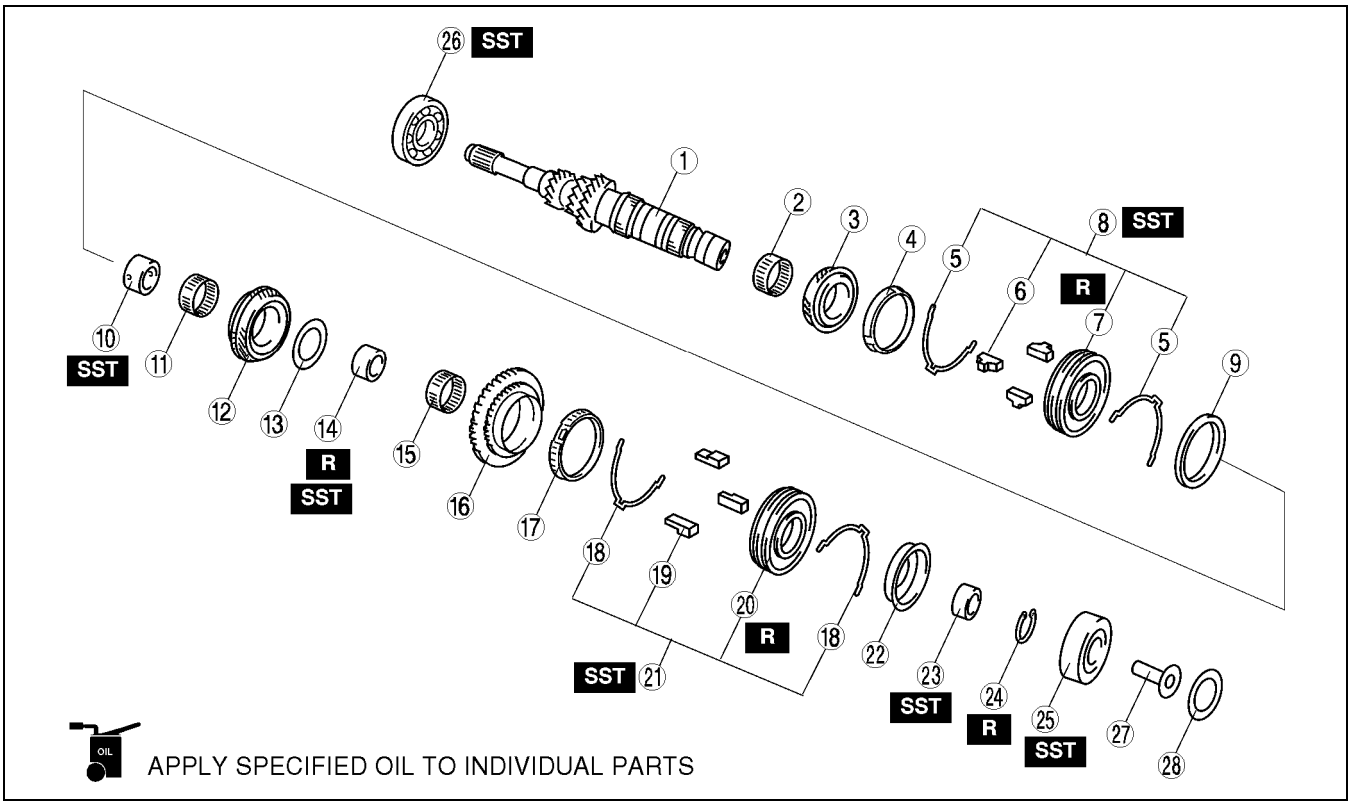

AME5112M135

1	Primary shaft
2	3rd needle bearing
3	3rd gear
4	3rd synchronizer ring
5	3rd/4th synchronizer key spring (See J–14 3rd/4th Synchronizer Key Spring, 3rd/4th Synchronizer Key and 3rd/4th Clutch Hub and Sleeve Assembly Note)
6	3rd/4th synchronizer key
7	3rd/4th clutch hub and sleeve
8	3rd/4th clutch hub set (See J–14 3rd/4th Clutch Hub Set Assembly Note)
9	4th synchronizer ring
10	4th bushing (See J–15 4th Bushing Assembly Note)
11	4th needle bearing
12	4th gear
13	Primary shaft thrust washer (See J–15 Primary Shaft Thrust Washer Assembly Note)
14	5th bushing (See J–16 5th Bushing Assembly Note)
15	5th needle bearing

16	5th gear
17	5th synchronizer ring
18	5th synchronizer key spring (See J–16 5th Synchronizer Key Spring, 5th Synchronizer Key and 5th Clutch Hub and Sleeve Assembly Note)
19	5th synchronizer key
20	5th clutch hub and sleeve
21	5th clutch hub set (See J–17 5th Clutch Hub Set Assembly Note)
22	5th gear stopper
23	Primary shaft bearing spacer (See J–17 Primary Shaft Bearing Spacer Assembly Note)
24	Snap ring (See J–17 Snap Ring Assembly Note)
25	Primary shaft rear bearing (See J–18 Primary Shaft Rear Bearing Assembly Note)
26	Primary shaft front bearing (See J–18 Primary Shaft Front Bearing Assembly Note)
27	Oil channel
28	Primary shaft rear bearing adjust shim

3rd/4th Synchronizer Key Spring, 3rd/4th Synchronizer Key and 3rd/4th Clutch Hub and Sleeve Assembly Note

1. Install the 3rd/4th synchronizer key spring, 3rd/4th synchronizer key and 3rd/4th clutch hub to the 3rd/4th clutch sleeve.
   (1) Install a new 3rd/4th clutch hub in the direction as shown in the figure.

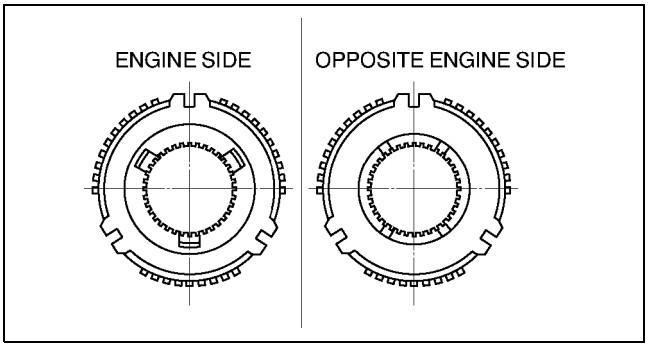

AME5112M047

   (2) Install a new 3rd/4th clutch sleeve in the direction as shown in the figure.

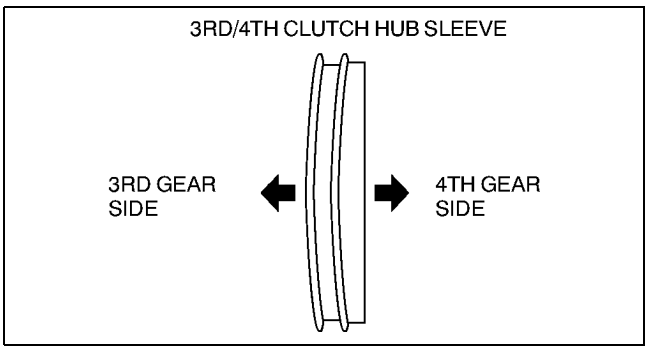

AME5112M048

   (3) Install center projection parts of 3rd/4th synchronizer key springs to different synchronizer keys on each side.

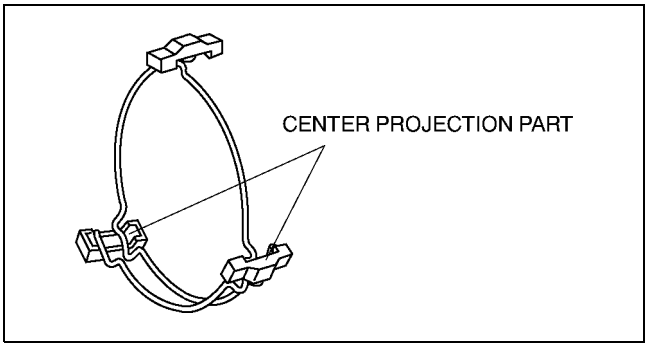

AME5112M049

3rd/4th Clutch Hub Set Assembly Note

Note
- Align the synchronizer ring grooves with the synchronizer key during assembly.

1. Install the 3rd/4th clutch hub set using the **SSTs**.

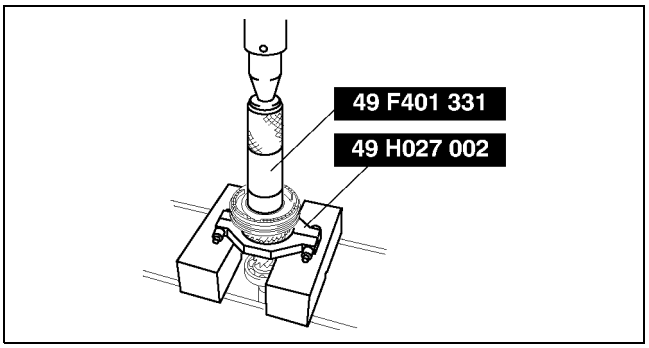

AME5112M110

4th Bushing Assembly Note

1. Install the 4th bushing using the **SSTs**.

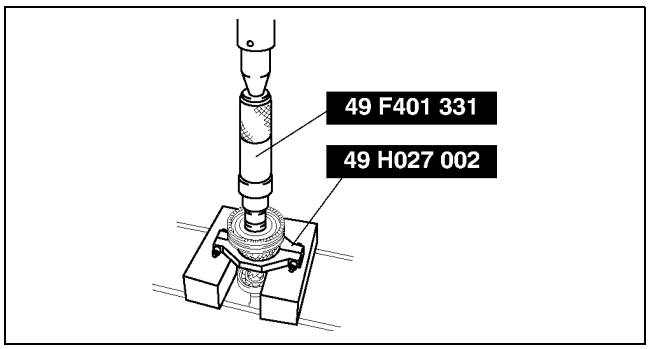

AME5112M114

Primary Shaft Thrust Washer Assembly Note

1. Install the primary shaft thrust washer using the **SSTs**.

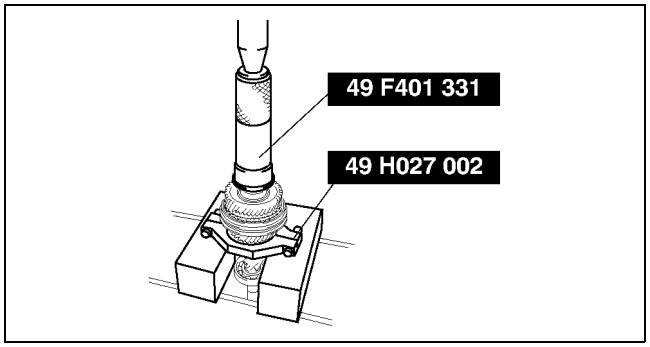

AME5112M115

2. Measure length C1 as shown in the figure.
   - If it is not within the specification, adjust it by selecting a proper thrust washer from below.
   - Select only one thrust washer.

   Specification C1
   154.7—154.8 mm {6.091—6.094 in}

Primary shaft thrust washer size

Thickness (mm {in})	
3.84 {0.151}	4.02 {0.158}
3.90 {0.154}	4.08 {0.161}
3.96 {0.156}	4.14 {0.163}

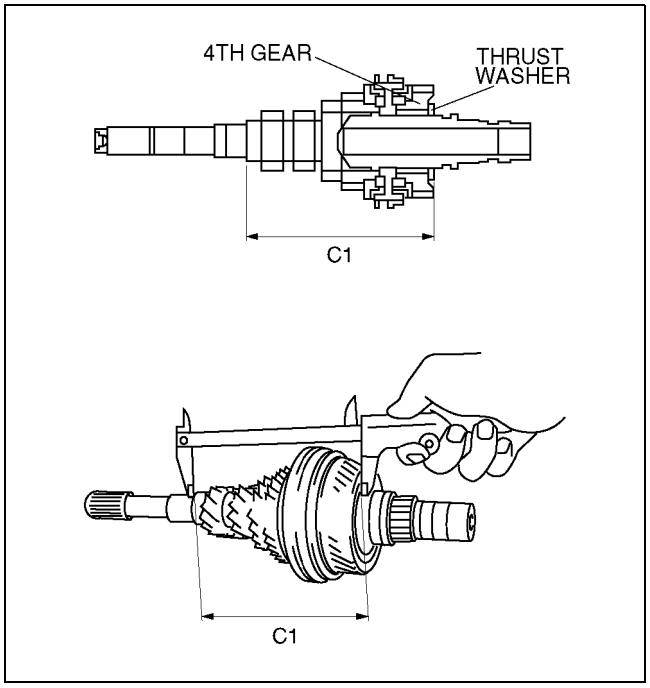

AME5112M050

5th Bushing Assembly Note

1. Install a new 5th bushing using the **SSTs**.

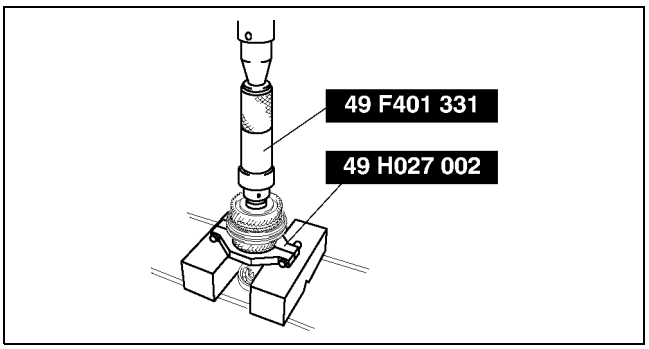

AME5112M116

5th Synchronizer Key Spring, 5th Synchronizer Key and 5th Clutch Hub and Sleeve Assembly Note

1. Assembly the 5th synchronizer key springs, 5th synchronizer key and 5th clutch hub to the 5th clutch sleeve.
   (1) Install a new 5th clutch hub in the direction as shown in the figure.

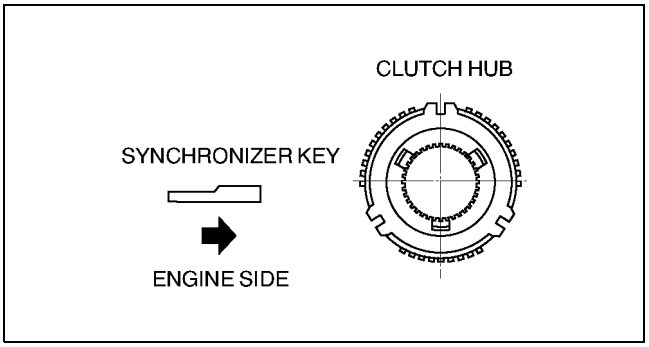

AME5112M051

   (2) Install a new 5th clutch sleeve in the direction as shown in the figure.

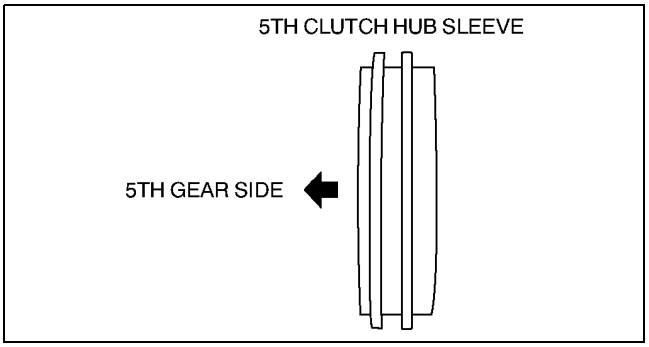

AME5112M052

   (3) Install center projection parts of 5th synchronizer key springs to different synchronizer keys on each side.

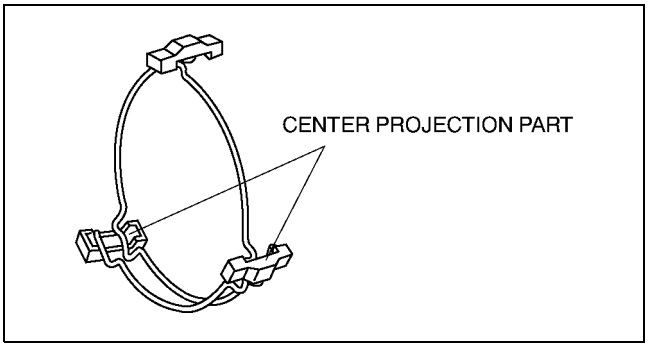

AME5112M049

5th Clutch Hub Set Assembly Note

Note
- Align the synchronizer ring grooves with the synchronizer key during assembly.

1. Install the 5th clutch hub set using the **SSTs**.

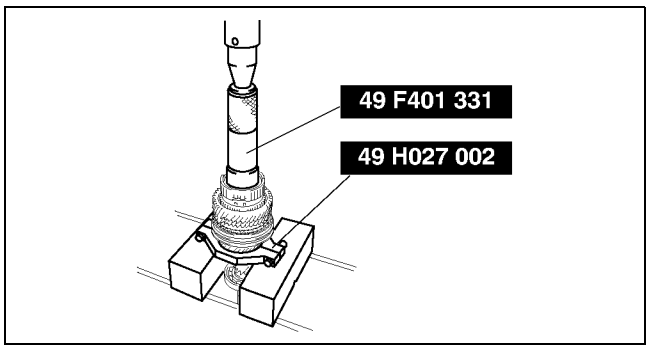

AME5112M117

Primary Shaft Bearing Spacer Assembly Note

1. Install the primary shaft bearing spacer using the **SSTs**.

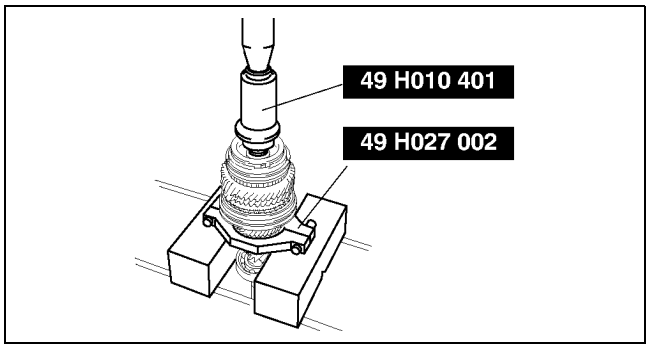

AME5112M118

Snap Ring Assembly Note

1. Install a new snap ring to the primary shaft.
2. Measure the clearance between the snap ring and the primary shaft bearing spacer.
   - If it is not within the specification, adjust it by selecting a proper snap ring from below.

Clearance
0.0—0.1 mm {0.0000—0.0039 in}

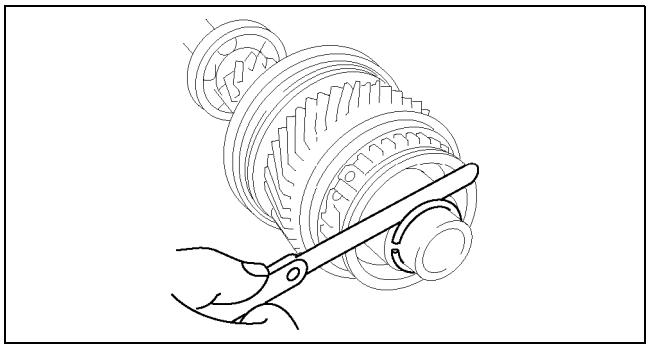

AME5112M053

Snap ring size

Thickness (mm {in})	
1.71 {0.067}	2.01 {0.079}
1.76 {0.069}	2.06 {0.081}
1.81 {0.071}	2.11 {0.083}
1.86 {0.073}	2.16 {0.085}
1.91 {0.075}	2.21 {0.087}
1.96 {0.077}	2.26 {0.089}

Primary Shaft Rear Bearing Assembly Note

1. Place the primary shaft rear bearing with the brown side facing toward the 5th gear.
2. Install the primary shaft rear bearing using the **SSTs**.

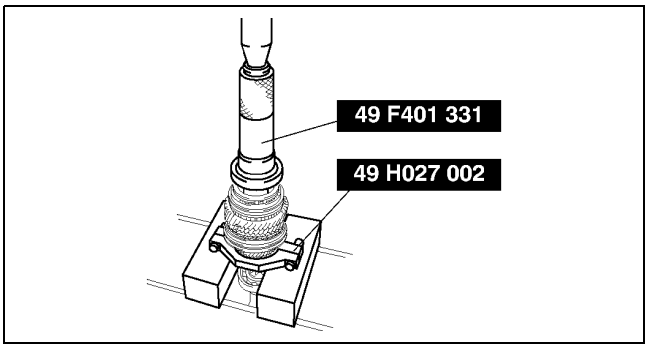

AME5112M119

Primary Shaft Front Bearing Assembly Note

1. Install the primary shaft front bearing using the **SSTs**.
2. Inspect the 3rd gear and 5th gear thrust clearance and 4th gear end play. (See J–8 PRIMARY SHAFT COMPONENTS PREINSPECTION.)

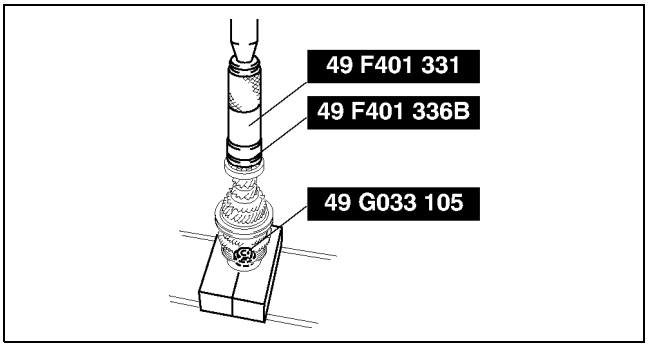

AME5112M120

SECONDARY SHAFT COMPONENTS PREINSPECTION

AME511217301M01

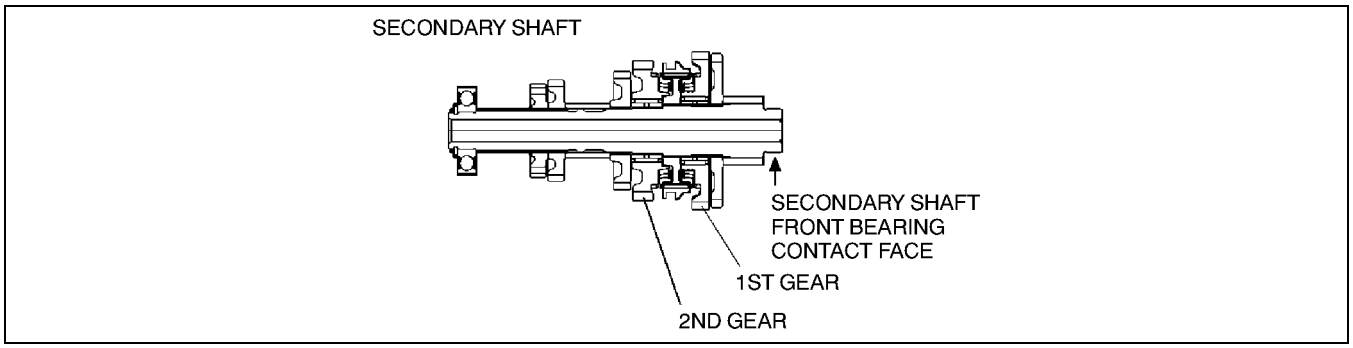

AME5112M094

1st Gear End Play

1. Set up the secondary shaft component, and fix it.
2. Slide the 1st gear up and down, and measure the length of the movement.
   - If not as specified, assemble the secondary shaft component again.

Length of the movement
0.20—0.30 mm {0.0078—0.0118 in}

2nd Gear End Play

1. Set up the secondary shaft component, and fix it.
2. Slide the 2nd gear up and down, and measure the length of the movement.
   - If not as specified, assemble the secondary shaft component again.

Length of the movement
0.06—0.16 mm {0.0024—0.0063 in}

SECONDARY SHAFT COMPONENTS DISASSEMBLY

AME511217301M02

1. Disassemble in the order shown in the figure.

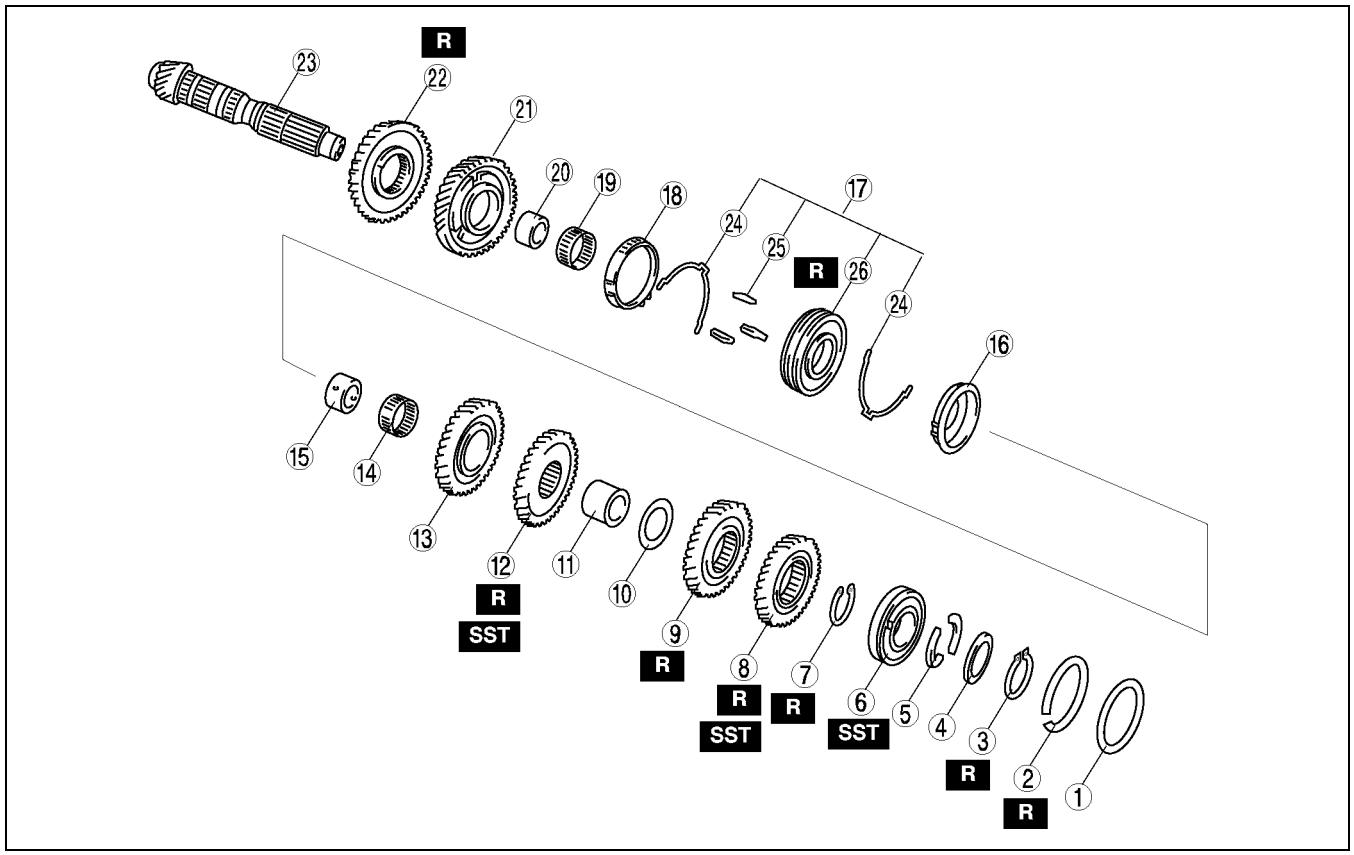

AME5112M096

1	Secondary shaft rear bearing adjust shim
2	Snap ring
3	Snap ring
4	C ring holder
5	Secondary shaft C ring
6	Secondary shaft rear bearing (See J–20 Secondary Shaft Rear Bearing Disassembly Note)
7	Snap ring
8	5th gear (See J–20 4th Gear and 5th Gear Disassembly Note)
9	4th gear
10	4th gear adjustment shim
11	3rd/4th secondary shaft spacer
12	3rd gear (See J–20 3rd Gear, 2nd Gear, 2nd Needle Bearing, 2nd Bushing, 2nd Inner Synchronizer Component, 1st/2nd Clutch Hub Set, 1st Inner Synchronizer Component, 1st Needle Bearing, 1st Bushing, 1st Gear and Reverse Main Gear Disassembly Note)

13	2nd gear
14	2nd needle bearing
15	2nd bushing
16	2nd inner synchronizer component
17	1st/2nd clutch hub set
18	1st inner synchronizer component
19	1st needle bearing
20	1st bushing
21	1st gear
22	Reverse main gear
23	Secondary shaft
24	Synchronizer key spring
25	1st/2nd synchronizer key
26	1st/2nd clutch hub and sleeve

Secondary Shaft Rear Bearing Disassembly Note

1. Remove the secondary shaft rear bearing using the **SSTs**.

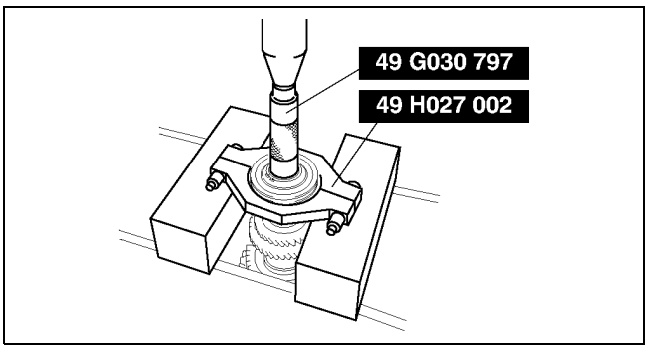

AME5112M113

4th Gear and 5th Gear Disassembly Note

1. Remove the 4th gear and 5th gear at the same time using the **SSTs**.

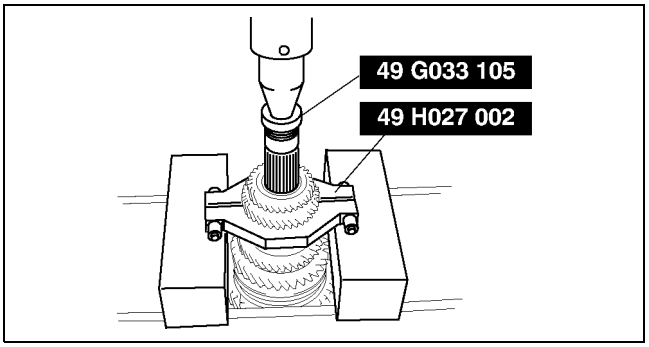

AME5112M111

3rd Gear, 2nd Gear, 2nd Needle Bearing, 2nd Bushing, 2nd Inner Synchronizer Component, 1st/2nd Clutch Hub Set, 1st Inner Synchronizer Component, 1st Needle Bearing, 1st Bushing, 1st Gear and Reverse Main Gear Disassembly Note

1. Remove the 3rd gear, 2nd gear, 2nd needle bearing, 2nd bushing, 2nd inner synchronizer component, 1st/2nd clutch hub set, 1st inner synchronizer component, 1st needle bearing, 1st bushing, 1st gear and reverse main gear at the same time using the **SST**.

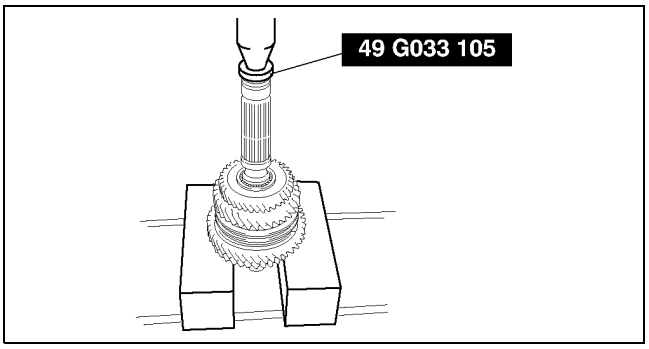

AME5112M112

SECONDARY SHAFT COMPONENTS INSPECTION

AME511217301M03

Secondary Shaft and Gear Inspection

1. Inspect the shaft for damage, abnormal wear, dents, flaking, or bending.
   - If there is malfunction, replace the shaft.
2. Inspect the gears for damage, abnormal wear, dents, flaking, or bending.
   - If there is malfunction, replace the gear.
3. Inspect the oil passage for clogging.
   - If there is malfunction, replace the shaft.

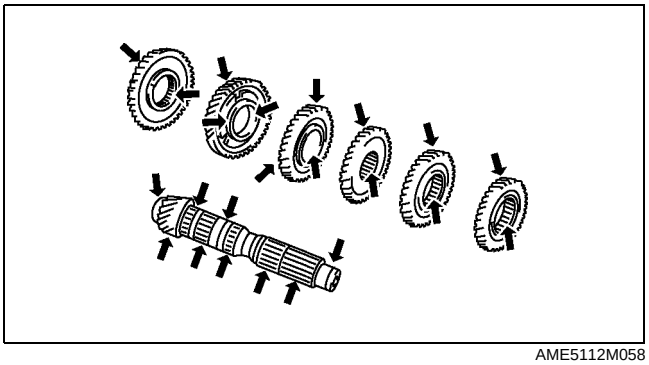

AME5112M058

Synchronizer Ring and Clutch Hub Component Inspection

1. Inspect the clutch hub sleeve, clutch hub, and synchronizer key contact surface for damage and abnormal wear.
   - If there is malfunction, replace the part where necessary.
2. Verify that the clutch hub sleeve and clutch hub move smoothly.
   - If there is malfunction, replace parts as necessary.

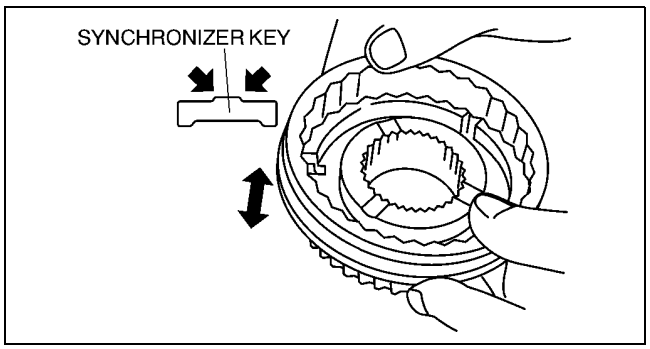

AME5112M045

3. Inspect the synchronizer ring teeth and grooves for damage, abnormal wear, and cracks.
   - If there is malfunction, replace the synchronizer ring.
4. Inspect the tapered surface for abnormal wear and cracks.
   - If there is malfunction, replace parts as necessary.

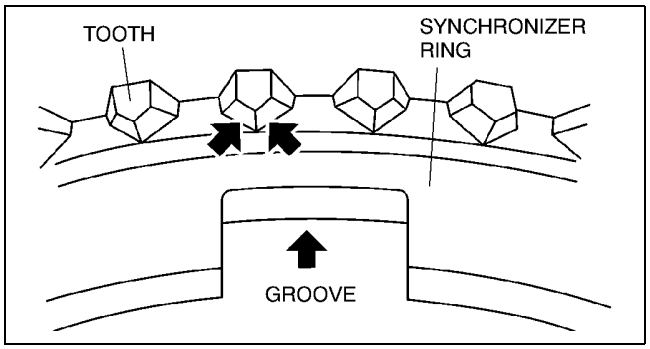

AME5112M046

Synchronizer Ring Clearance Inspection
Synchronizer component (1st gear)

1. Measure the clearance of synchronizer component outer, middle and inner synchronizer rings.
   - If clearances A and B exceed the maximum, replace as a set.

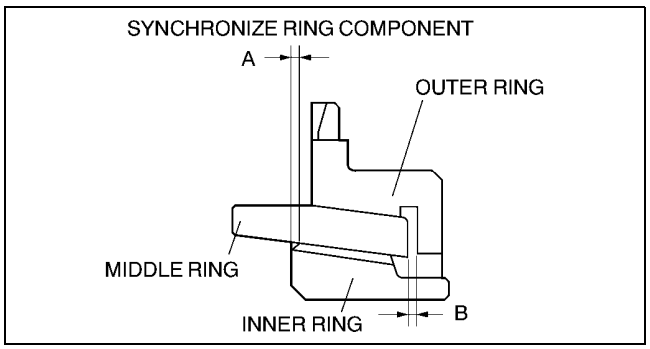

AME5112M059

   (1) Measure clearance A in two places or more and on opposite sides using a dial gauge, and calculate the average value.

   Clearance A
   Standard: 0.60—0.80 mm {0.0236—0.0315 in}
   Maximum: 0.20 mm {0.0079 in} or less

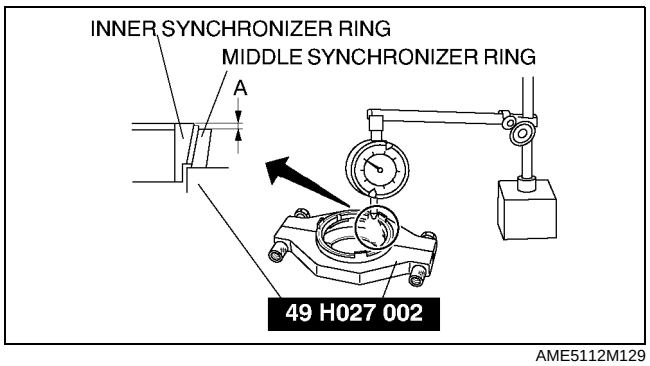

AME5112M129

(2) Measure clearance B in two places or more and on opposite sides using a feeler gauge, and calculate the average value.

Clearance B
Standard: 0.60—1.10 mm {0.0236—0.0433 in}
Maximum: 0.20 mm {0.0079 in} or less

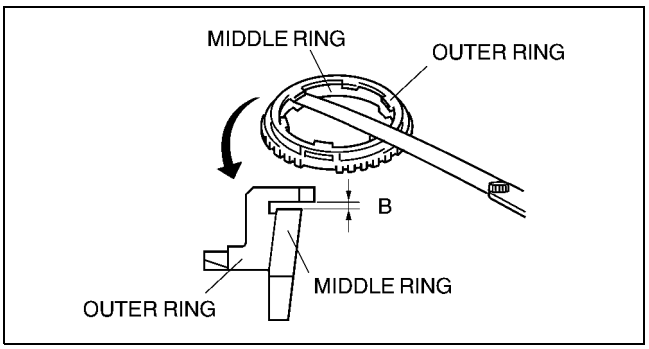

AME5112M060

Synchronizer component (2nd gear)

1. Inspect clearance of the synchronizer component outer, middle, and inner synchronizer rings.
   - If the clearance A, B and C exceed the maximum, replace as a set.

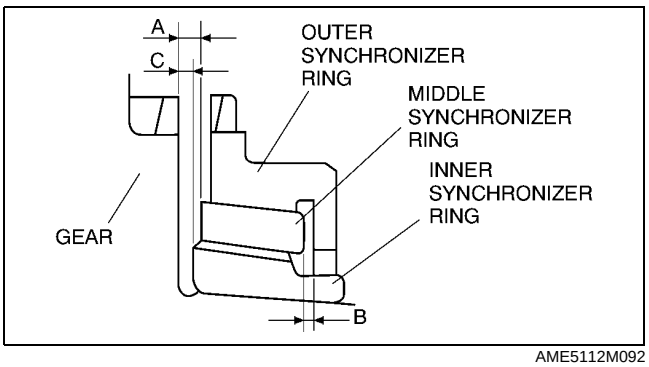

AME5112M092

(1) Measure clearance A in two places or more and on opposite sides using a feeler gauge while the synchronizer ring is manually press fit to the taper surface of the clutch gear, and calculate the average value.

Clearance A
Standard: 0.60—1.20 mm {0.0236—0.0472 in}
Maximum: 0.30 mm {0.0118 in} or less

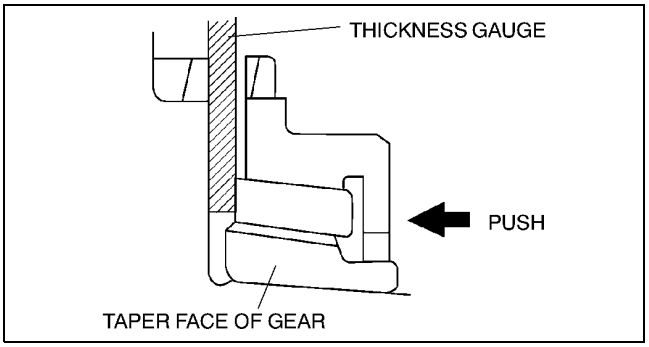

AME5112M090

(2) Measure clearance B in two places or more and on opposite sides with a feeler gauge, and calculate the average value.

Clearance B
Standard: 0.60—1.10 mm {0.0236—0.0433 in}
Maximum: 0.20 mm {0.0079 in} or less

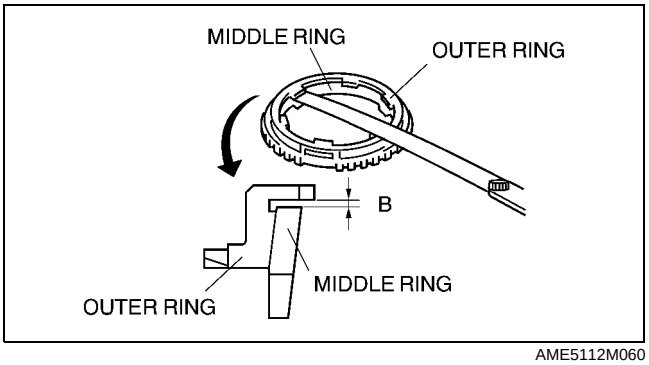

AME5112M060

(3) Measure clearance C in two places or more and on opposite sides with a feeler gauge while the synchronizer ring is manually press fit to the taper surface of the clutch gear, and calculate the average value.

Clearance C
Standard: 0.70—1.10 mm {0.0276—0.0433 in}
Maximum: 0.30 mm {0.0118 in} or less

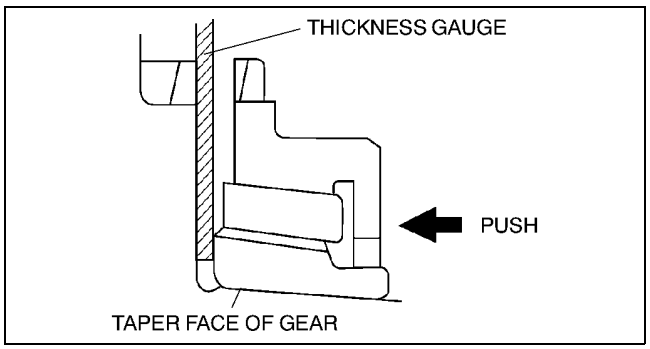

AME5112M091

Bearing Inspection

1. Inspect the ball and the ball contact surface for damage and abnormal wear.
   - If there is malfunction, replace the bearing.
2. Verify that the bearing rotates smoothly.
   - If there is malfunction, replace the bearing.

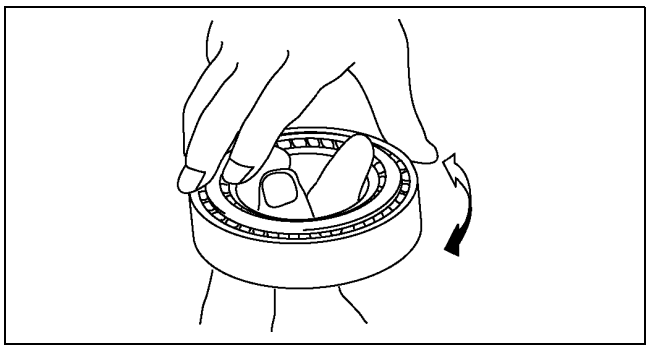
AME5112M072

SECONDARY SHAFT COMPONENTS ASSEMBLY

AME511217301M04

1. Assemble in the order shown in the figure.

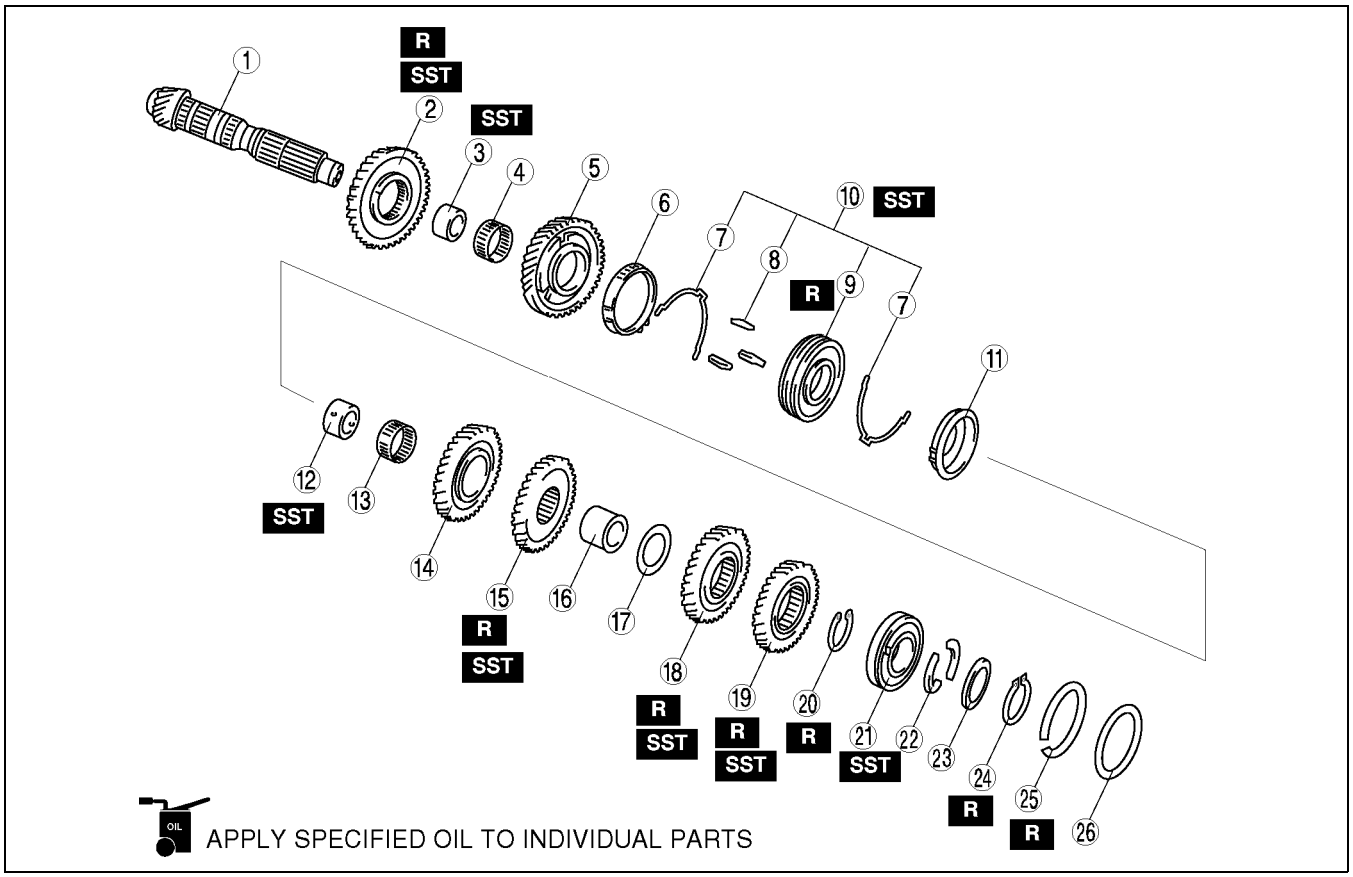

AME5112M136

1	Secondary shaft
2	Reverse main gear (See J–25 Reverse Main Gear Assembly Note)
3	1st bushing (See J–25 1st Bushing Assembly Note)
4	1st needle bearing
5	1st gear
6	1st inner synchronizer component
7	Synchronizer key spring (See J–26 Synchronizer Key Spring, 1st/2nd Synchronizer Key and 1st/2nd Clutch Hub and Sleeve Assembly Note)
8	1st/2nd synchronizer key
9	1st/2nd clutch hub and sleeve
10	1st/2nd clutch hub set (See J–26 1st/2nd Clutch Hub Set Assembly Note)
11	2nd inner synchronizer component
12	2nd bushing (See J–27 2nd Bushing Assembly Note)
13	2nd needle bearing
14	2nd gear

15	3rd gear (See J–27 3rd Gear Assembly Note)
16	3rd/4th secondary shaft spacer
17	4th gear adjustment shim (See J–27 4th Gear Adjustment Shim Assembly Note)
18	4th gear (See J–28 4th Gear Assembly Note)
19	5th gear (See J–28 5th Gear Assembly Note)
20	5th gear Snap ring (See J–28 5th Gear Snap Ring Assembly Note)
21	Secondary shaft rear bearing (See J–28 Secondary Shaft Rear Bearing Assembly Note)
22	Secondary shaft C ring (See J–29 Secondary Shaft C Ring Assembly Note)
23	C ring holder
24	Snap ring
25	Snap ring
26	Secondary shaft rear bearing adjust shim

Reverse Main Gear Assembly Note

1. Place a new reverse main gear with the bevel edge facing toward the engine.

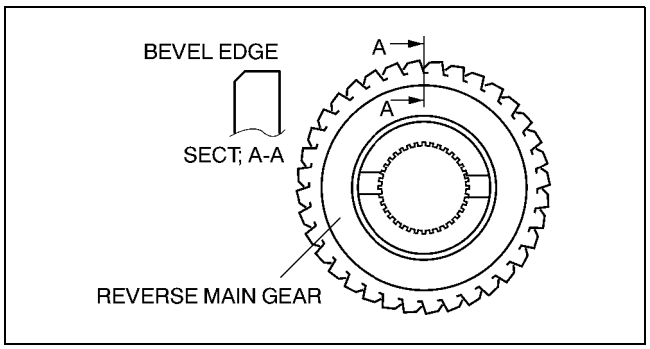

AME5112M062

2. Install the reverse main gear using the **SST**.

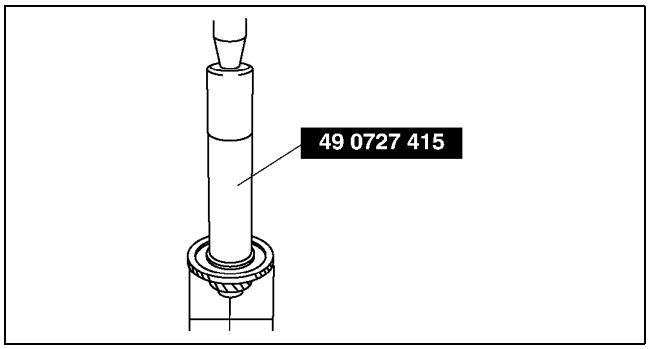

AME5112M133

1st Bushing Assembly Note

Caution

- **The shaft can be damaged when installing the 1st bushing if the SST touchedes the secondary shaft. Install the SST to the shaft without touching the shaft.**

1. Place the 1st bushing, and assemble the **SST** as shown in the figure.

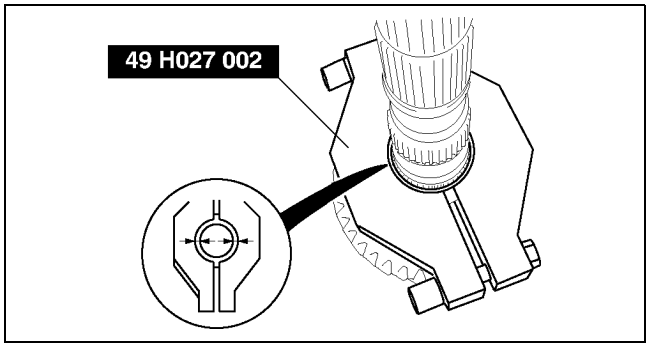

AME5112M122

2. Install the 1st bushing using the **SSTs**.

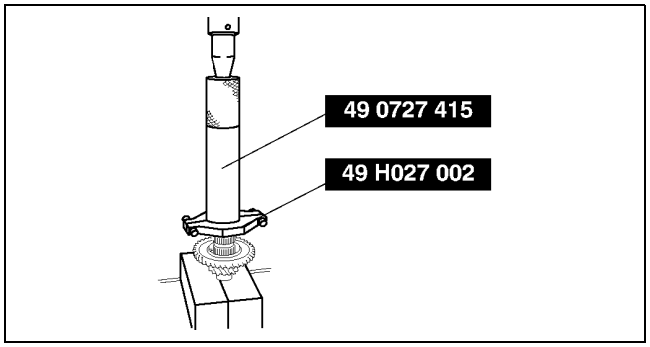

AME5112M121

Synchronizer Key Spring, 1st/2nd Synchronizer Key and 1st/2nd Clutch Hub and Sleeve Assembly Note

1. Install the synchronizer key spring, 1st/2nd synchronizer key and 1st/2nd clutch hub to the 1st/2nd clutch sleeve.
   (1) Install a new 1st/2nd clutch hub in the direction as shown in the figure.

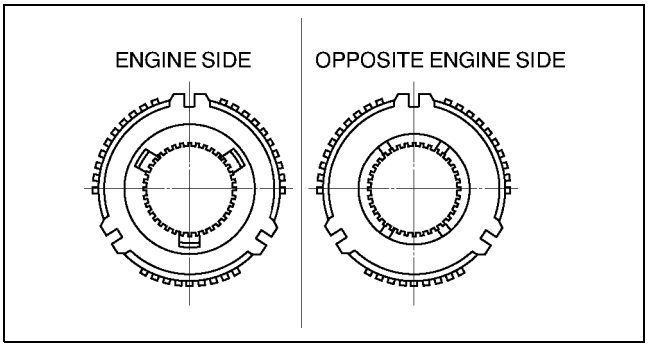

AME5112M047

   (2) Install the 1st/2nd clutch sleeve in the direction as shown in the figure.

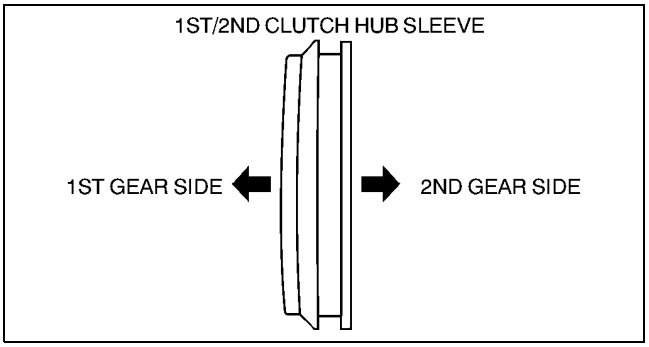

AME5112M063

   (3) Install center projection parts of synchronizer key springs to different synchronizer keys at each side.

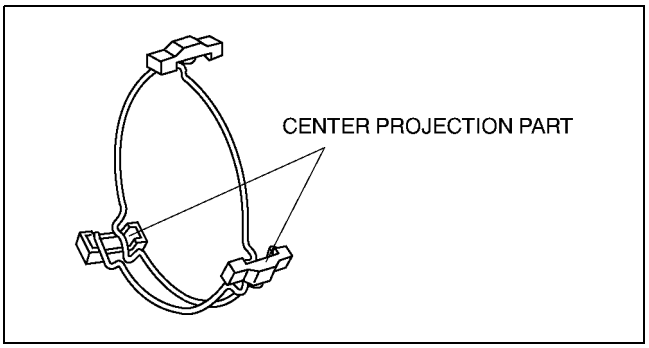

AME5112M049

1st/2nd Clutch Hub Set Assembly Note

Note
- Align the synchronizer ring grooves with the synchronizer key during assembly.

1. Install the 1st/2nd clutch hub set using the **SSTs**.

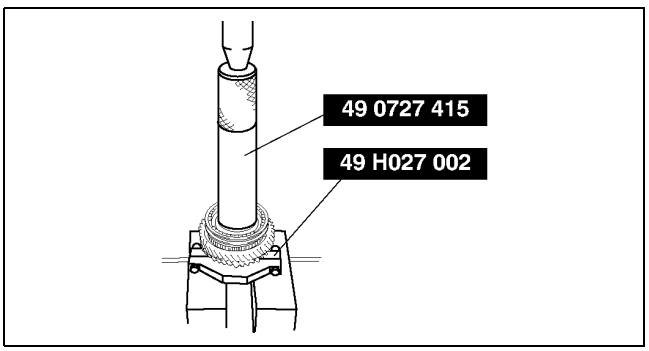

AME5112M123

2nd Bushing Assembly Note

1. Install the 2nd bushing using the **SSTs**.

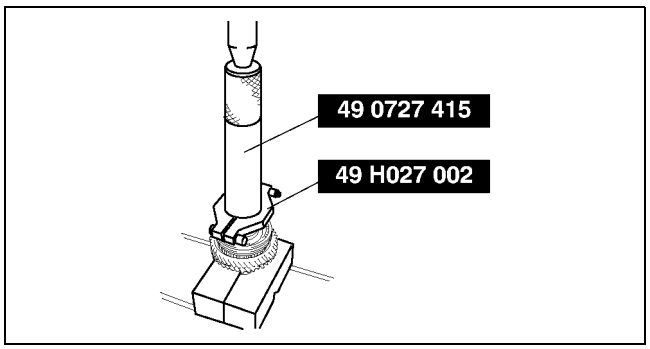

AME5112M124

3rd Gear Assembly Note

1. Place a new 3rd gear in the direction as shown in the figure.
2. Install the 3rd gear using the **SST**.

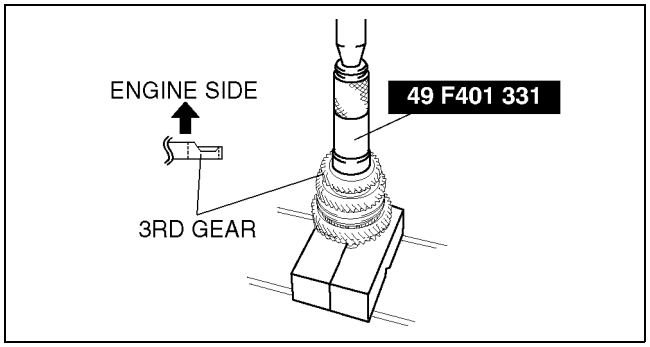

AME5112M125

4th Gear Adjustment Shim Assembly Note

1. Install the 4th gear adjustment shim washer.
2. Measure length C2 as shown in the figure.
   - If it is not within the specification, adjust it by selecting a proper 4th gear adjustment shim from below.
   - Select only one 4th gear adjustment shim.

Specification C2
173.85—173.95 mm {6.844—6.848 in}

4th gear adjustment shim size

Thickness (mm {in})	
0.52 {0.021}	0.84 {0.033}
0.60 {0.024}	0.92 {0.036}
0.68 {0.027}	1.00 {0.039}
0.76 {0.030}	1.08 {0.043}

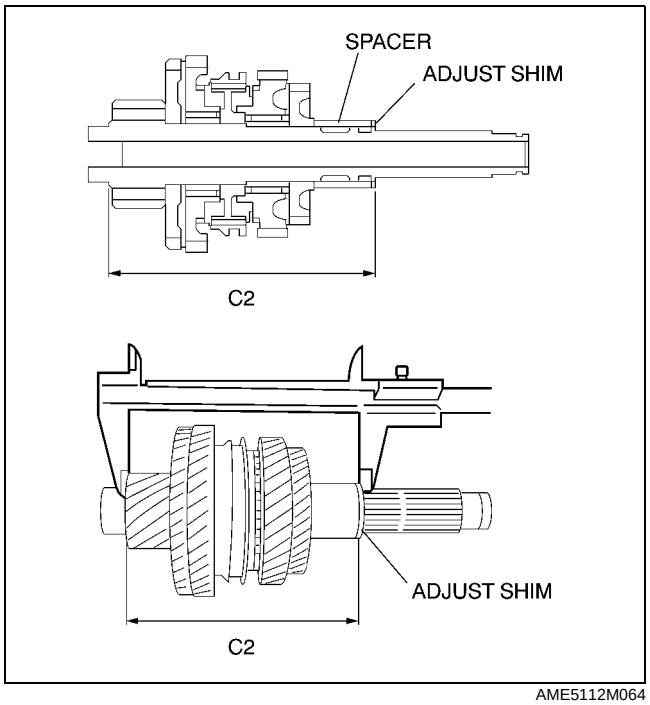

AME5112M064

4th Gear Assembly Note

1. Place a new 4th gear in the direction as shown in the figure.
2. Install the 4th gear using the **SST**.

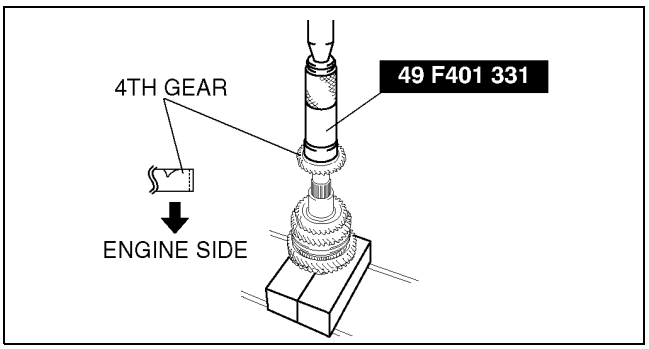

AME5112M126

5th Gear Assembly Note

1. Place a new 5th gear in the direction as shown in the figure.
2. Install the 5th gear using the **SSTs**.

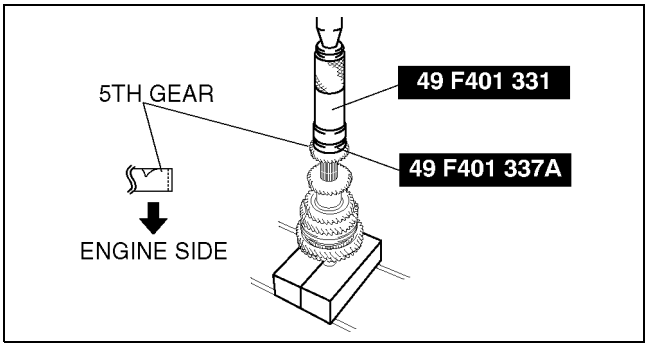

AME5112M127

5th Gear Snap Ring Assembly Note

1. Install a new 5th gear snap ring to the secondary shaft.
2. Measure the clearance between the 5th gear snap ring and the 5th gear.
   - If it is not within the specification, adjust it by selecting a proper snap ring from below.

Clearance
0.0—0.1 mm {0.0000—0.0039 in}

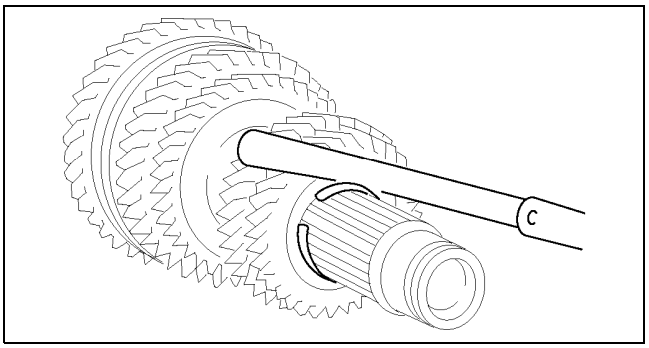

AME5112M065

5th gear snap ring size

Thickness (mm {in})	
1.85 {0.073}	2.05 {0.081}
1.90 {0.075}	2.10 {0.083}
1.95 {0.077}	2.15 {0.085}
2.00 {0.079}	2.20 {0.087}

Secondary Shaft Rear Bearing Assembly Note

1. Install the secondary shaft rear bearing using the **SSTs**.

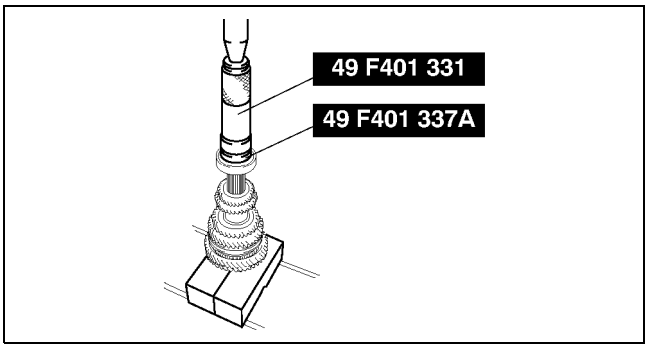

AME5112M128

Secondary Shaft C Ring Assembly Note

1. Install the secondary shaft C ring to the secondary shaft.
2. Measure the clearance between the secondary shaft C ring and the secondary shaft rear bearing.
   - If it is not within the specification, adjust it by selecting a proper C ring from below.

Clearance
0.00—0.06 mm {0.0000—0.0024 in}

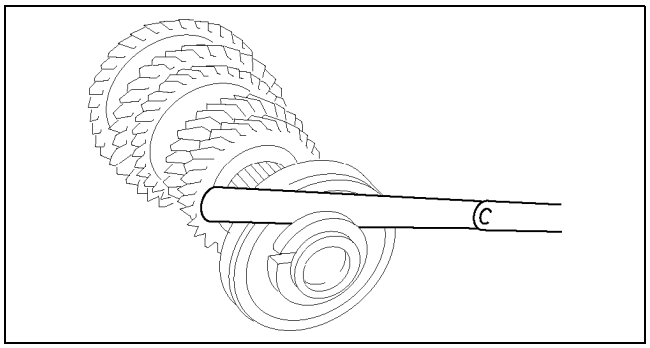

AME5112M066

Secondary shaft C ring size

Thickness (mm {in})	
2.535 {0.0998}	2.835 {0.1116}
2.565 {0.1010}	2.865 {0.1128}
2.595 {0.1022}	2.895 {0.1140}
2.625 {0.1033}	2.925 {0.1152}
2.655 {0.1045}	2.955 {0.1163}
2.685 {0.1057}	2.985 {0.1175}
2.715 {0.1069}	3.015 {0.1187}
2.745 {0.1081}	3.045 {0.1199}
2.775 {0.1093}	3.075 {0.1211}
2.805 {0.1104}	—

3. Inspect the 1st gear and 2nd gear end play. (See J–18 SECONDARY SHAFT COMPONENTS PREINSPECTION.)

REVERSE IDLER SHAFT COMPONENTS DISASSEMBLY/ASSEMBLY

AME511217315M01

1. Disassemble in the order shown in the figure.
2. Assemble in the reverse order of disassembly.

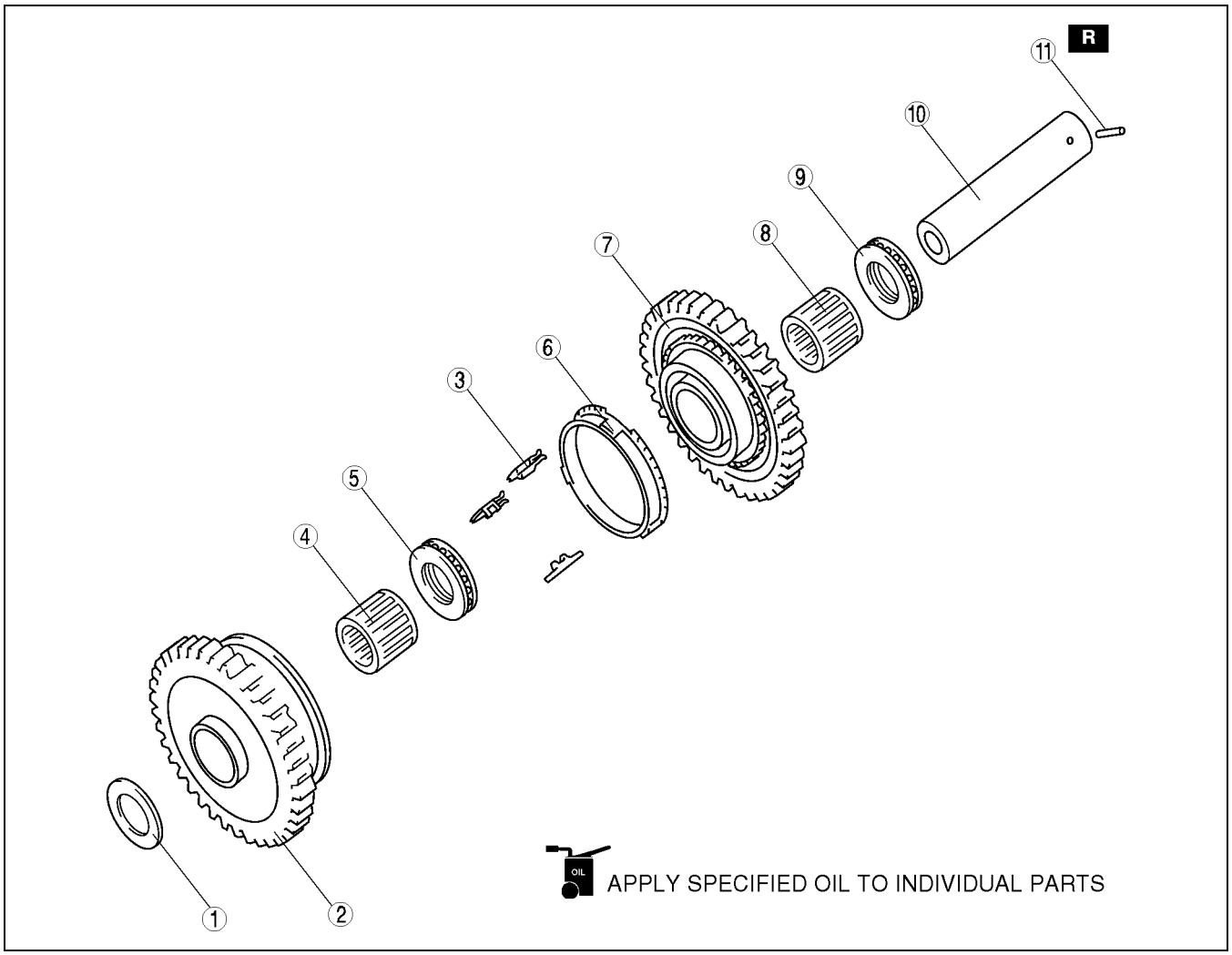

AME5112M005

1	Reverse idler adjust shim
2	Reverse idler rear gear and reverse coupling sleeve
3	Insert spring (See J–30 Insert Spring Assembly Note)
4	Reverse idler needle bearing
5	Thrust needle bearing

6	Reverse synchronizer ring
7	Reverse idler front gear
8	Reverse idler needle bearing
9	Thrust needle bearing
10	Reverse idler shaft
11	Spring pin

Insert Spring Assembly Note

1. Install the insert spring in the direction as shown in the figure.

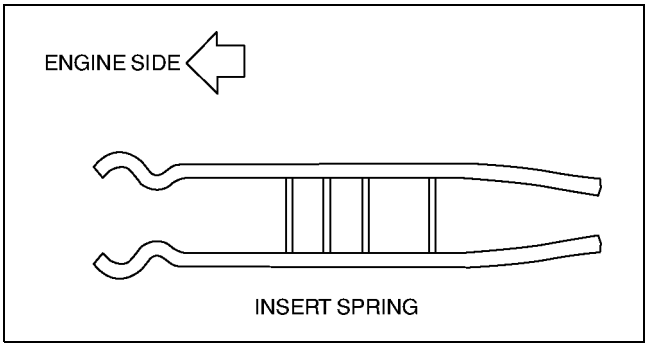

AME5112M071

REVERSE IDLER SHAFT COMPONENTS INSPECTION

AME511217315M02

Reverse idler shaft and gears Inspection

1. Inspect the shaft for damage, abnormal wear, dents, flaking, or bending.
   - If there is malfunction, replace the shaft.
2. Inspect the gears for damage, abnormal wear, dents, flaking, or bending.
   - If there is malfunction, replace the gear.

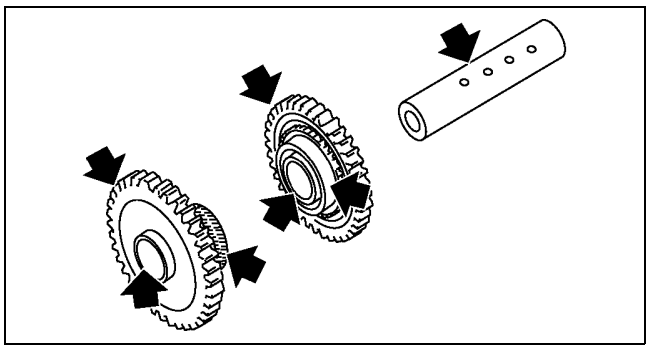

AME5112M068

Synchronizer Ring and Clutch Hub Component Inspection

1. Inspect the clutch hub sleeve, clutch hub, and insert spring contact surface for damage, abnormal wear, or bending.
   - If there is malfunction, replace the part where necessary.
2. Verify that the clutch hub sleeve and clutch hub move smoothly.
   - If there is malfunction, replace parts as necessary.

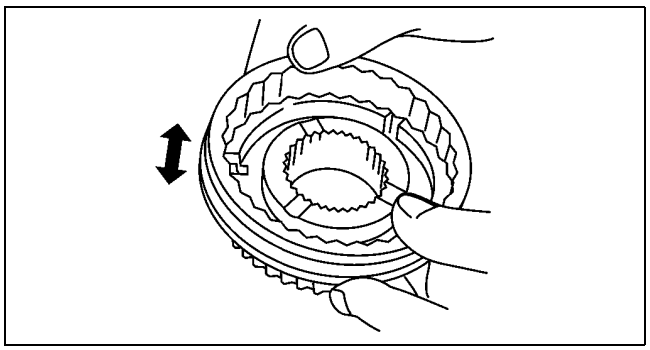

AME5112M139

3. Inspect the synchronizer ring teeth and grooves for damage, abnormal wear, and cracks.
   - If there is malfunction, replace the synchronizer ring.
4. Inspect the tapered surface for abnormal wear and cracks.
   - If there is malfunction, replace parts as necessary.

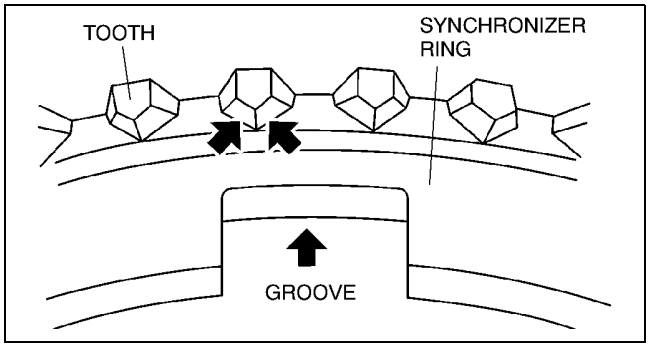

AME5112M046

5. Measure the clearance between the synchronizer ring and the flank surface of the gear.
   - If not as specified, replace the synchronizer ring.

Note
- Set the synchronizer ring squarely in the gear; then measure around the circumference.

Standard clearance
0.95—1.40 mm {0.037—0.055 in}
Minimum clearance
0.70 mm {0.028 in}

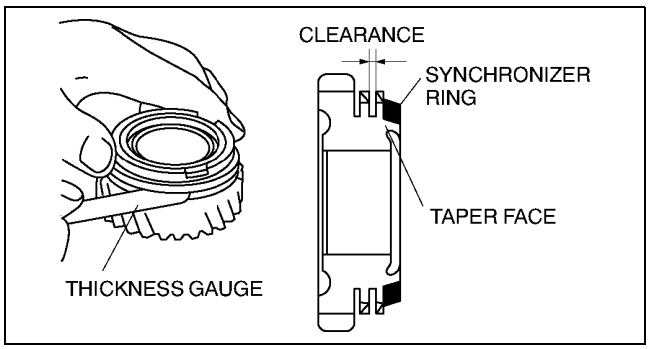

AME5112M070

Bearing Inspection

1. Inspect the ball and the ball contact surface for damage and abnormal wear.
   - If there is malfunction, replace the bearing.
2. Verify that the bearing rotates smoothly.
   - If there is malfunction, replace the bearing.

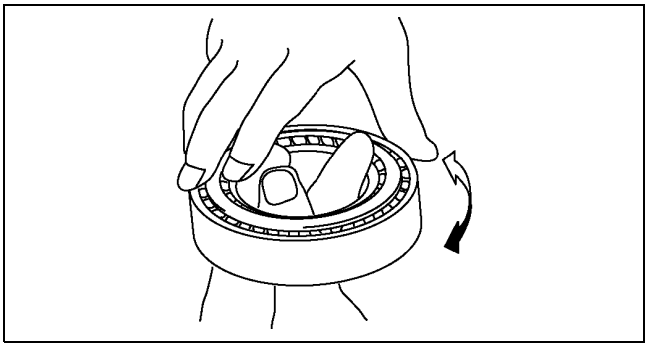

AME5112M072

DIFFERENTIAL PREINSPECTION

AME511227100M01

Backlash Inspection

1. Measure the backlash of the side gear.
   - If not as specified, replace parts as necessary.

Standard
0.10—0.20 mm {0.0039—0.0079 in}

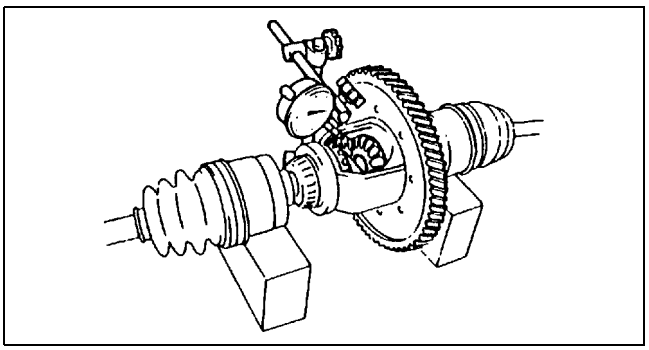

AME5112M140

DIFFERENTIAL DISASSEMBLY

AME511227100M02

1. Disassemble in the order shown in the figure.

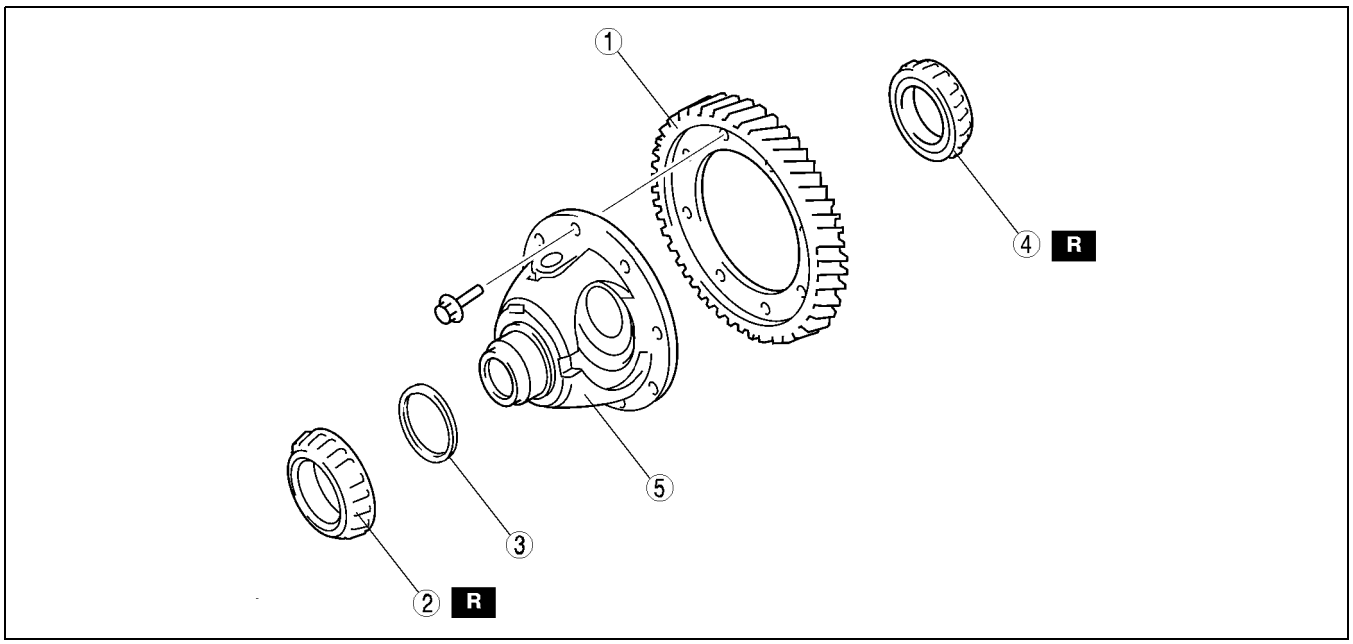

AME5112M006

1	Ring gear
2	Bearing (ring gear-opposite side) (See J–33 Bearing (Ring Gear-Opposite Side) Disassembly Note)
3	Spacer

4	Bearing (ring gear side) (See J–33 Bearing (Ring Gear Side) Disassembly Note)
5	Gear case component

Bearing (Ring Gear-Opposite Side) Disassembly Note

1. Remove the bearing using the **SST**.

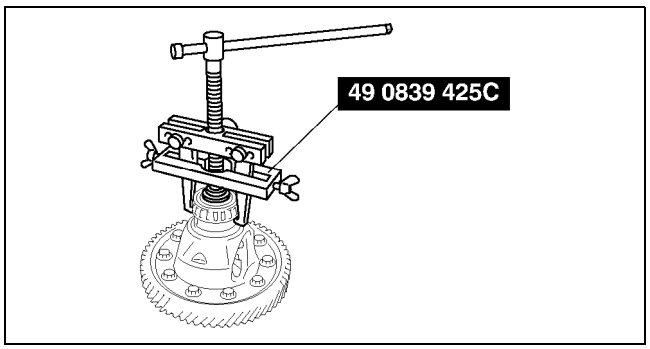

AME5112M130

Bearing (Ring Gear Side) Disassembly Note

1. Remove the bearing using the **SSTs**.

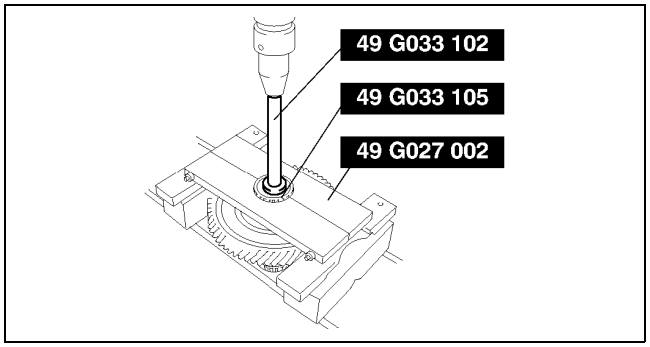

AME5112M134

DIFFERENTIAL ASSEMBLY

AME511227100M03

1. Assemble in the order shown in the figure.

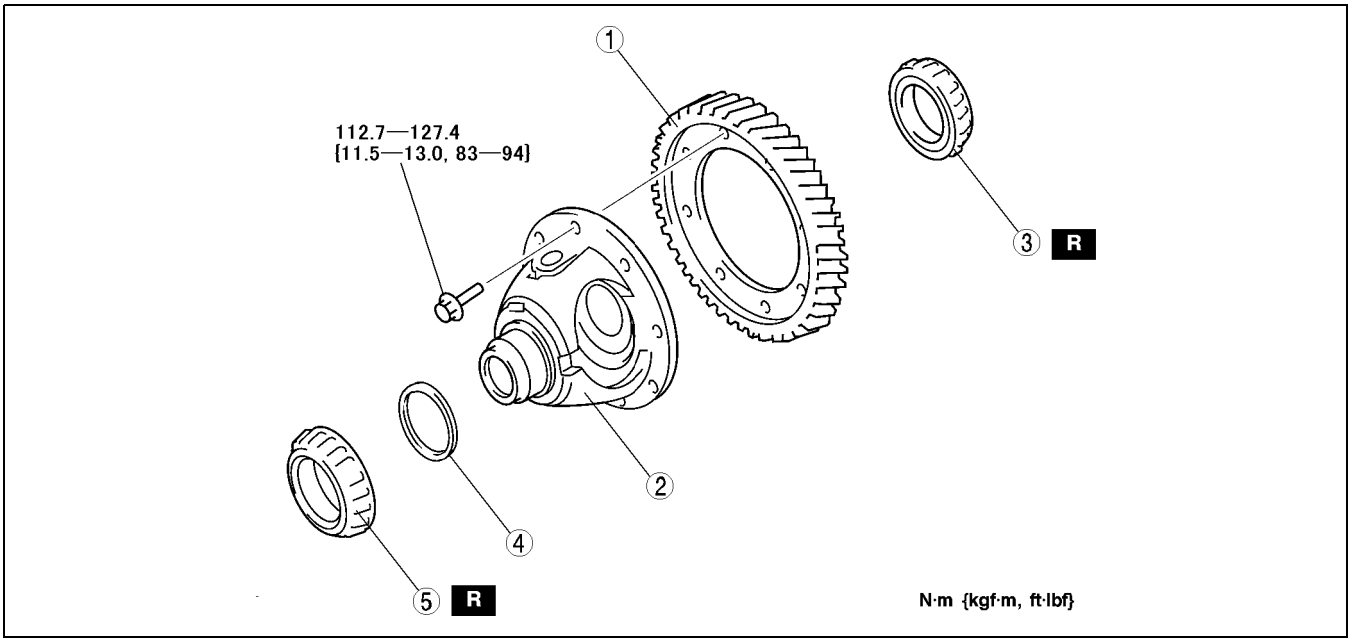

AME5112M141

1	Ring gear (See J–34 Ring Gear Assembly Note)
2	Gear case component
3	Bearing (ring gear side) (See J–34 Bearing (Ring Gear Side) Assembly Note)
4	Spacer (See J–34 Spacer Assembly Note)
5	Bearing (ring gear-opposite side) (See J–34 Bearing (Ring Gear-Opposite Side) Assembly Note)

Ring Gear Assembly Note

1. Install the gear case component, and tighten a bolt in the order shown in the figure.

Tightening torque
112.7—127.4 N·m
{11.5—13.0 kgf·m, 83—94 ft·lbf}

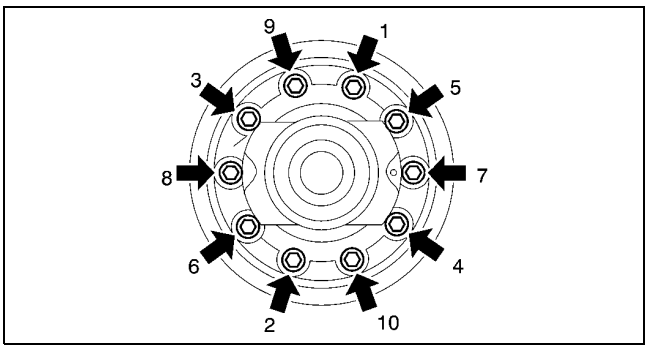

AME5112M075

Bearing (Ring Gear Side) Assembly Note

1. Install a new bearing using the **SSTs**.

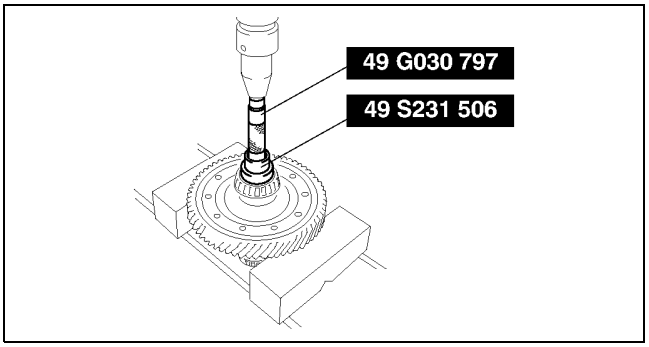

AME5112M073

Spacer Assembly Note

1. Install the spacer using the **SST**.

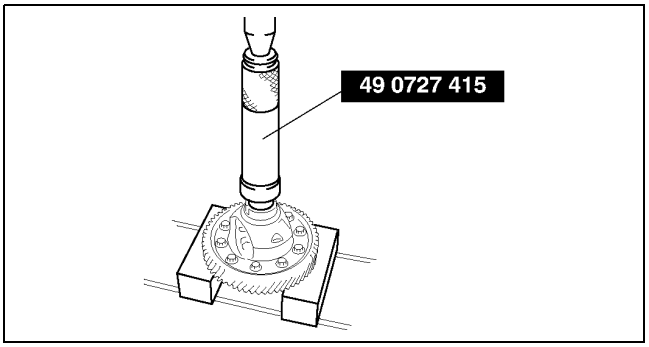

AME5112M131

Bearing (Ring Gear-Opposite Side) Assembly Note

1. Install a new bearing using the **SSTs**.

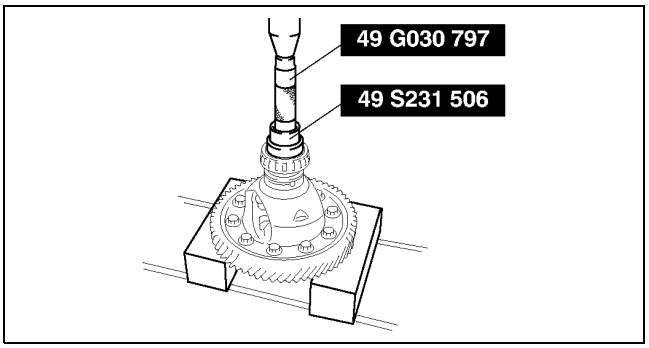

AME5112M132

PRIMARY SHAFT END PLAY ADJUSTMENT

AME511201029M07

Note

- Adjust the primary shaft end play by measuring the clearance between the transaxle case and the primary shaft rear bearing, and selecting a primary shaft bearing adjustment shim.
- Calculate adjustment shim thickness O as defined below to adjust the primary shaft bearing end play to standard value.

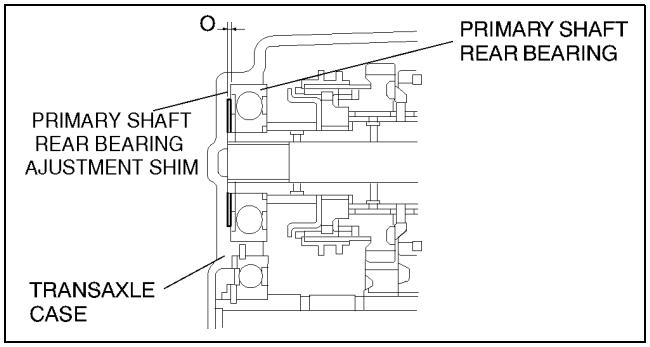

AME5112M030

Standard value: 0.00—0.06 mm {0.0000—0.0024 in}
Dimension O = (O1 - O2) + end play
O: adjustment shim thickness
O1: transaxle case contact face and adjustment shim installation surface dimension
O2: clutch housing contact face and primary shaft rear bearing contact face dimension

Adjustment shim thickness

(mm {in})

0.40 {0.016}	0.76 {0.030}	1.12 {0.044}	1.48 {0.058}
0.44 {0.017}	0.80 {0.031}	1.16 {0.046}	1.52 {0.060}
0.48 {0.019}	0.84 {0.033}	1.20 {0.047}	1.56 {0.061}
0.52 {0.020}	0.88 {0.035}	1.24 {0.049}	1.60 {0.063}
0.56 {0.022}	0.92 {0.036}	1.28 {0.050}	1.64 {0.065}
0.60 {0.024}	0.96 {0.038}	1.32 {0.052}	1.68 {0.066}
0.64 {0.025}	1.00 {0.039}	1.36 {0.054}	1.72 {0.068}
0.68 {0.027}	1.04 {0.041}	1.40 {0.055}	—
0.72 {0.028}	1.08 {0.043}	1.44 {0.057}	—

1. Measure dimension O1 for the clutch housing installation surface of the transaxle case and the adjustment shim installation surface using a depth gauge and straight edge.

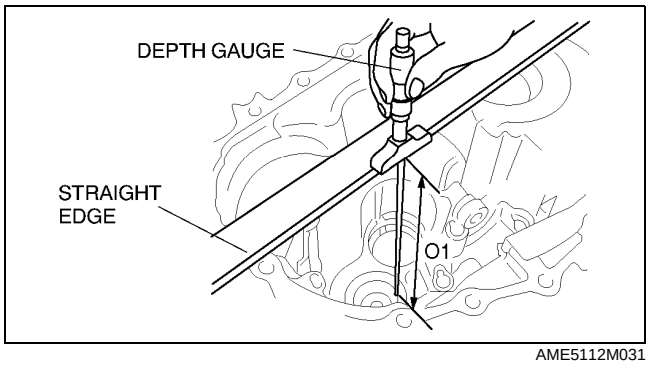

AME5112M031

2. Measure dimension O2 for the transaxle case installation surface of the clutch housing and the primary shaft rear bearing contact face using a depth gauge and straight edge.

Note

- Select only one adjustment shim.

3. Install the selected primary shaft rear bearing adjustment shim in the primary shaft component.

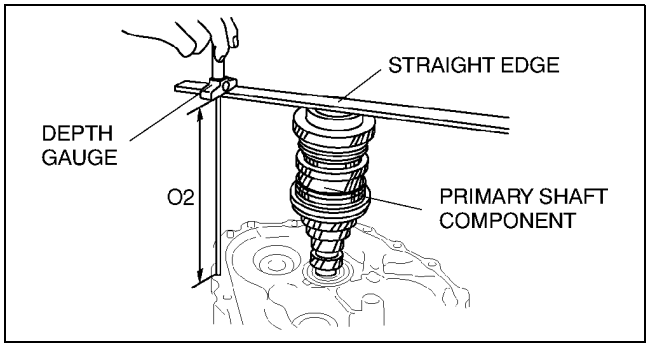

AME5112M032

SECONDARY SHAFT END PLAY ADJUSTMENT

AME511201029M08

Note

- Adjust the secondary shaft end play by measuring clearance M between the transaxle case and the secondary shaft rear bearing, and selecting a secondary shaft bearing adjustment shim.
- Calculate adjustment shim thickness P as defined below to adjust the secondary shaft bearing end play to standard value.

Standard value: 0.00—0.06 mm {0.0000—0.0024 in}
Dimension P = M + end play
P: adjustment shim thickness
M: transaxle case contact face and secondary shaft rear bearing contact

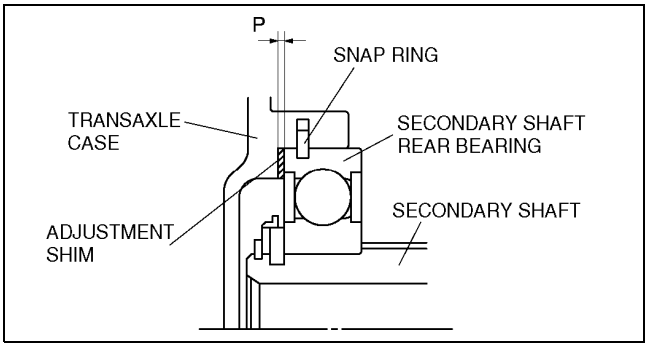

AME5112M033

Adjustment shim thickness

(mm {in})

0.40 {0.016}	0.64 {0.025}	0.84 {0.033}	1.04 {0.041}
0.48 {0.019}	0.68 {0.027}	0.88 {0.035}	1.08 {0.043}
0.52 {0.020}	0.72 {0.028}	0.92 {0.036}	—
0.56 {0.022}	0.76 {0.030}	0.96 {0.038}	—
0.60 {0.024}	0.80 {0.031}	1.00 {0.039}	—

1. Install the secondary shaft component to the clutch housing.
2. Install the snap ring to the transaxle case.
3. Attach the transaxle case to the clutch housing, and temporarily install installation bolts. Temporarily attach the snap ring to the secondary shaft rear bearing.
4. Set a dial gauge to the secondary shaft rear bearing through the snap ring installation hole.
5. While expanding the snap ring, lift the secondary shaft component through the control component installation hole until it contacts the transaxle case.
6. Release the secondary shaft component so that it moves back down and the snap ring resets to the secondary shaft rear bearing. Dimension M is the measured distance that the secondary shaft component moves.

   Note
   - Select only one adjustment shim.

7. Install the selected primary shaft rear bearing adjustment shim in the primary shaft component.

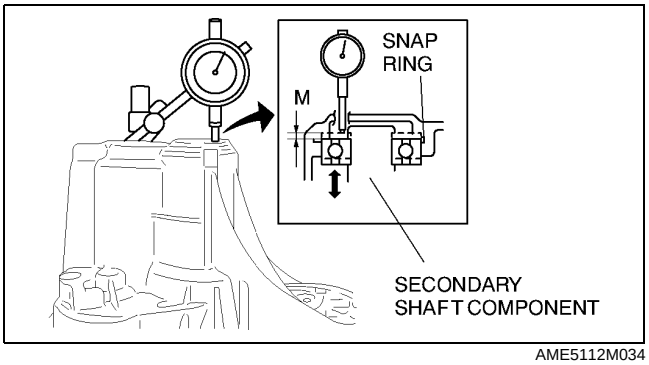

AME5112M034

REVERSE IDLER GEAR END PLAY ADJUSTMENT

AME511201029M06

Note

- Adjust the reverse idler gear end play by measuring the clearance between the transaxle case and a reverse idler gear (rear), and selecting a reverse idler gear adjustment shim.
- Calculate dimension Q for the adjustment shim thickness as defined below to adjust the reverse idler gear end play to standard value.

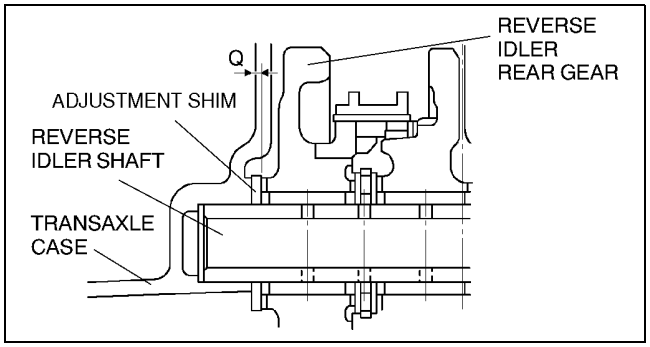

AME5112M039

Standard value: 0.04—0.10 mm {0.0016—0.0039 in}
Dimension Q = (Q1 + Q2) + end play
Q: adjustment shim thickness
Q1: transaxle case contact face and adjustment shim installation surface dimension
Q2: clutch housing contact face and reverse idler gear (rear) contact face dimension

Adjustment shim thickness

(mm {in})

1.76 {0.069}	2.00 {0.007}	2.24 {0.088}	2.48 {0.098}
1.80 {0.070}	2.04 {0.080}	2.28 {0.090}	2.52 {0.099}
1.84 {0.072}	2.08 {0.082}	2.32 {0.091}	2.56 {0.101}
1.88 {0.074}	2.12 {0.083}	2.36 {0.093}	2.60 {0.102}
1.92 {0.076}	2.16 {0.085}	2.40 {0.094}	2.64 {0.104}
1.96 {0.077}	2.20 {0.087}	2.44 {0.096}	—

1. Measure dimension Q1 between clutch housing installation surface of the transaxle case and adjustment shim installation surface using a depth gauge and straight edge.

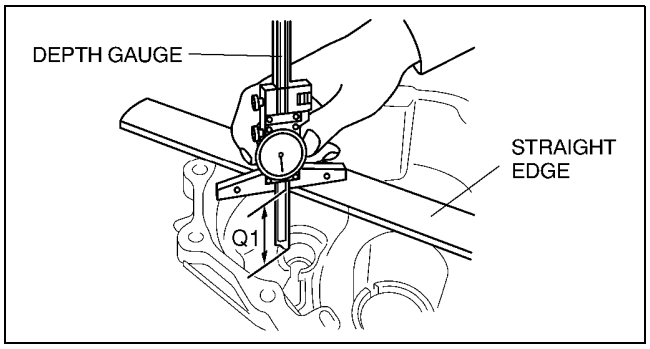

AME5112M040

2. Measure dimension Q2 between the transaxle case installation surface of the clutch housing and the reverse idler gear (rear) contact face using a depth gauge and straight edge.

Note

- Select only one adjustment shim.

3. Install the selected reverse idler gear adjustment shim in the reverse idler gear component.

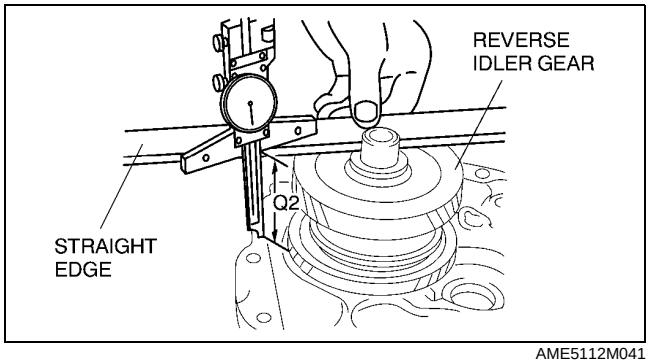

AME5112M041

DIFFERENTIAL SIDE BEARING PRELOAD ADJUSTMENT

AME511201029M05

Note

- Adjust the differential side bearing preload by measuring clearance L between the transaxle case and the differential side bearing outer race, and selecting a differential side bearing adjustment shim.
- Calculate dimension L for the adjustment shim thickness as defined below to adjust the differential side bearing preload to standard value.

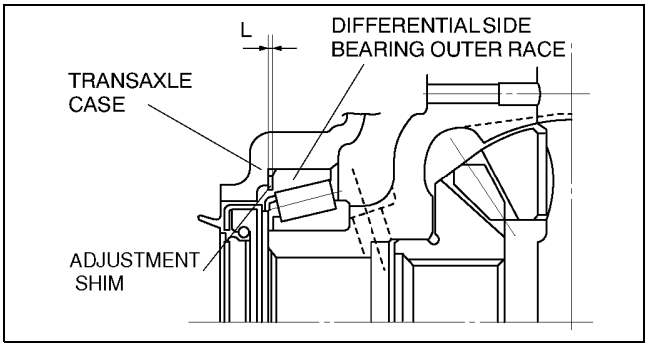

AME5112M035

Standard value: 0.15—0.21 mm {0.0059—0.0083 in}
Dimension L = (L1 + L2) + preload
L: adjustment shim thickness
L1: transaxle case contact face and adjustment shim installation surface dimension
L2: clutch housing contact face and differential side bearing contact face dimension

Adjustment shim thickness

(mm {in})

0.48 {0.019}	0.60 {0.024}	0.72 {0.028}	0.84 {0.033}
0.52 {0.020}	0.64 {0.025}	0.76 {0.030}	0.88 {0.035}
0.56 {0.022}	0.68 {0.027}	0.80 {0.031}	0.92 {0.036}

1. Measure dimension L1 between the clutch housing installation surface of the transaxle case and the adjustment shim installation surface using a depth gauge and straight edge.
2. Install the outer race to the ring gear side of the differential side bearing and, keeping the outer race level, lightly push it in and rotate the final gear 5 times or more.

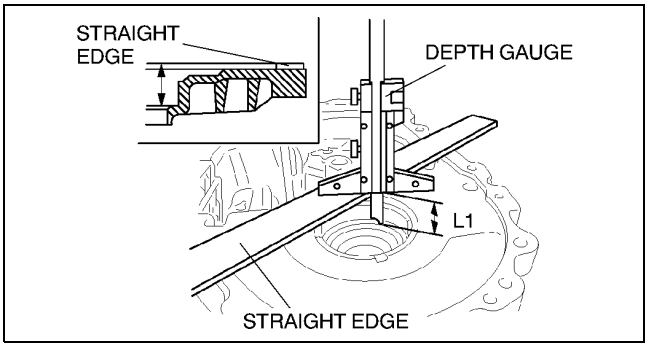

AME5112M036

3. Verify dimension L2 between the differential side bearing outer race and the transaxle case installation surface of the clutch housing using a depth gauge and straight edge.

Note

- Select up to 2 adjustment shims.

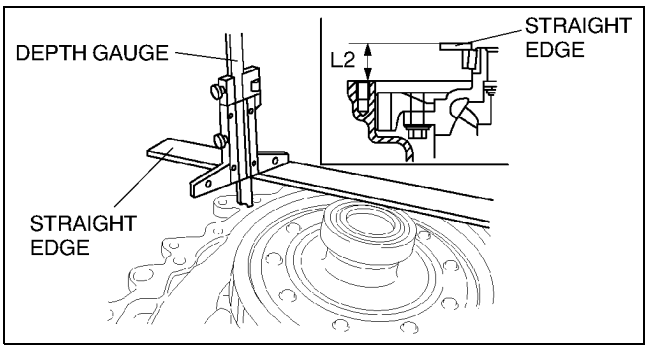

AME5112M037

4. Install selected adjustment shim, and install the differential side bearing outer race using the **SSTs**.

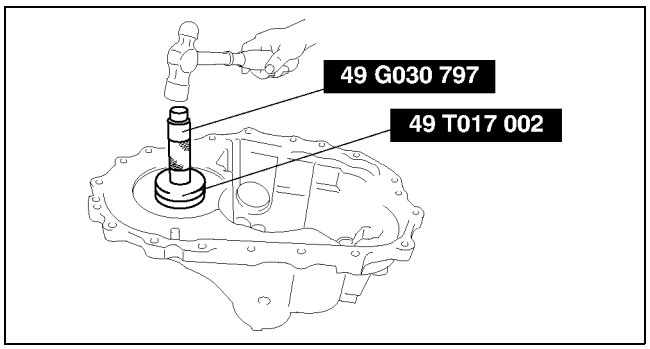

AME5112M038

CLUTCH HOUSING AND TRANSAXLE CASE COMPONENTS ASSEMBLY

AME511217010M05

Assembly Components

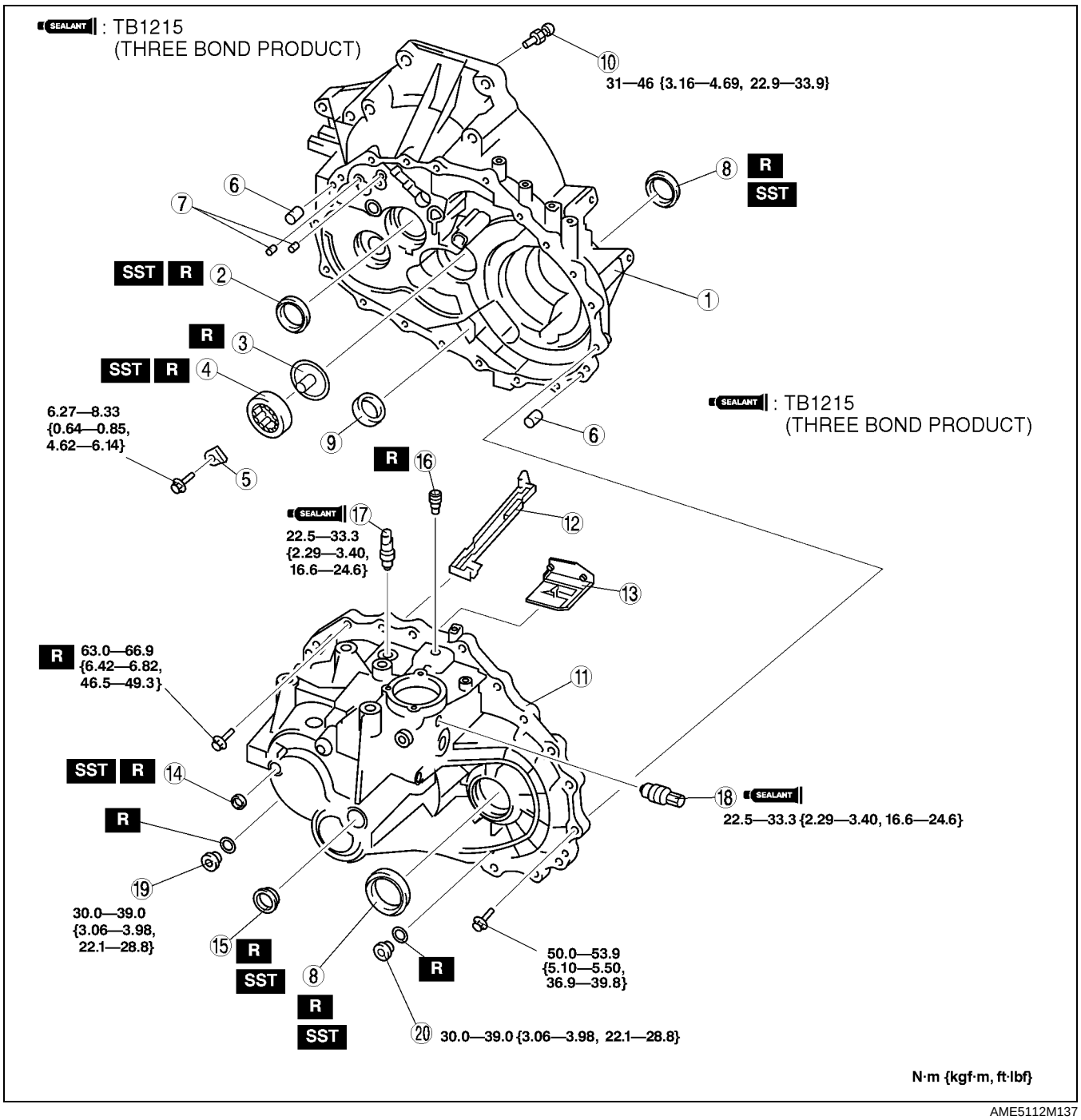

AME5112M137

1	Clutch housing
2	Primary shaft oil seal
3	Oil channel
4	Secondary shaft front bearing
5	Secondary shaft bearing retainer
6	Dowel pin
7	Knock pin
8	Differential oil seal
9	Magnet
10	Pivot pin

11	Transaxle case
12	Oil pass
13	Baffle plate
14	Welt plug
15	Bore plug
16	Air-bleed plug
17	Reverse switch
18	Neutral switch
19	Filler cap
20	Drain plug

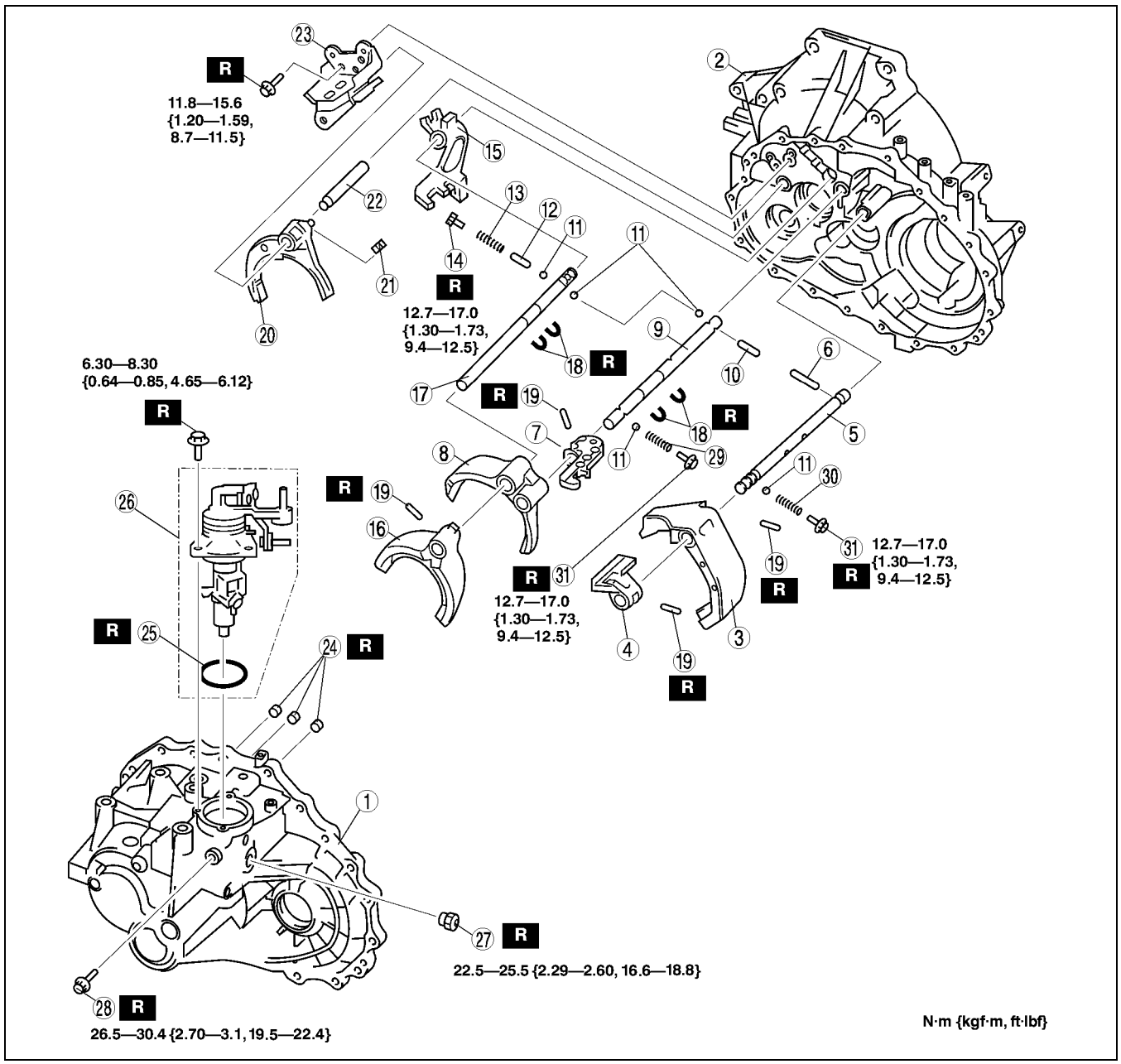

AME5112M138

1	Transaxle case
2	Clutch housing
3	1st/2nd shift fork
4	1st/2nd bracket
5	1st/2nd fork rod
6	Shift check sleeve (1st/2nd)
7	3rd/4th bracket
8	3rd/4th shift fork
9	3rd/4th fork rod
10	Inter lock pin
11	Check ball
12	Shift check sleeve (5th/reverse)
13	Check spring (5th/reverse)
14	Check plug (5th/reverse)
15	5th/reverse bracket
16	5th shift fork

17	5th/Reverse fork rod
18	C ring
19	Retaining pin
20	Reverse shift fork
21	Cap
22	Reverse fork rod
23	Reverse lever component
24	Rod bushing
25	O ring
26	Shift control component
27	Shift check bolt
28	Stopper bolt
29	Check spring (3rd/4th)
30	Check spring (1st/2nd)
31	Check plug (1st/2nd, 3rd/4th)

Assembly Procedure

1. Install a new primary shaft oil seal in the clutch housing using the **SST**.

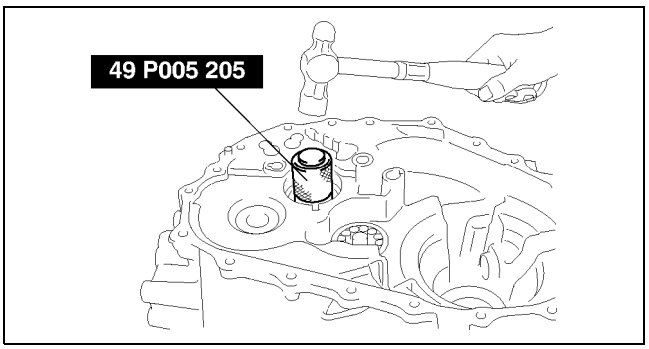

AME5112M017

2. Install a new differential oil seal (clutch housing side) using the **SSTs** so that the seal is flush with the housing surface.

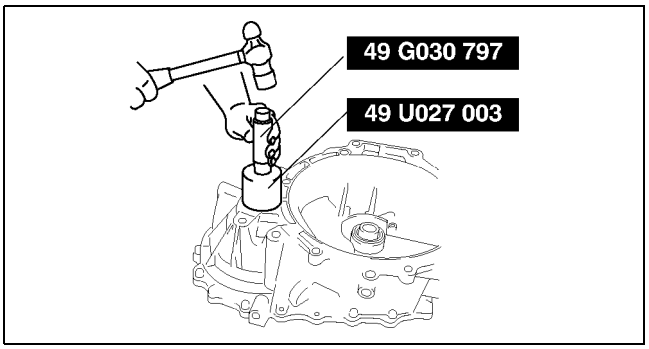

AME5112M105

3. Install a new oil channel in the secondary shaft.

   Note
   - When installing the oil channel, set the rib part of the oil channel to the hollow processing part of the clutch housing.

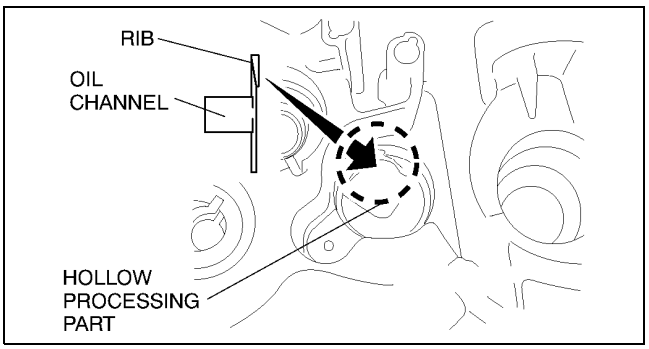

AME5112M018

4. Install a new secondary shaft front bearing using the **SSTs** as shown in the figure.

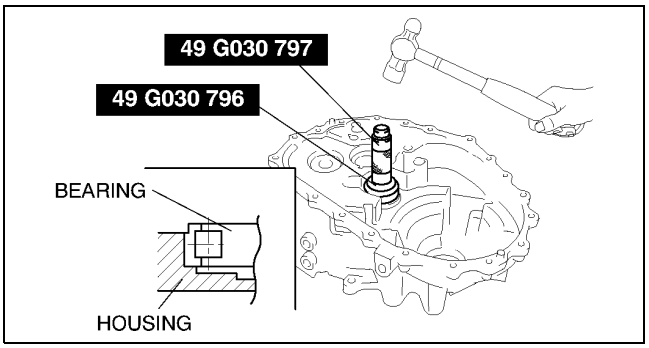

AME5112M019

5. Install the bearing retainer with the stamp facing up.

   Tightening torque
   6.27—8.33 N·m
   {0.64—0.85 kgf·m, 4.62—6.14 ft·lbf}

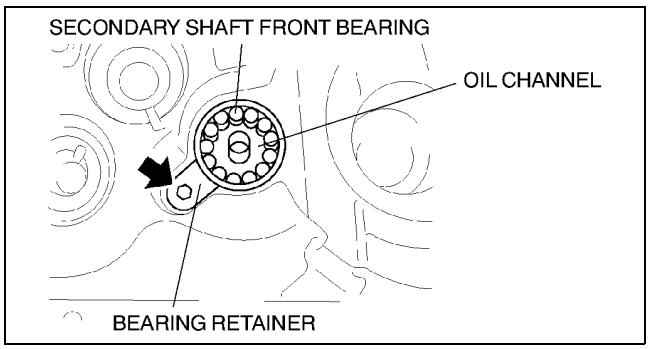

AME5112M020

6. Measure the differential preload, and install the differential side bearing outer race using the **SSTs**. (See J–38 DIFFERENTIAL SIDE BEARING PRELOAD ADJUSTMENT.)

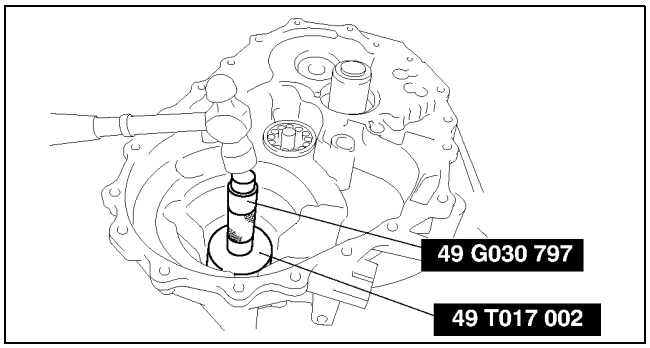

AME5112M021

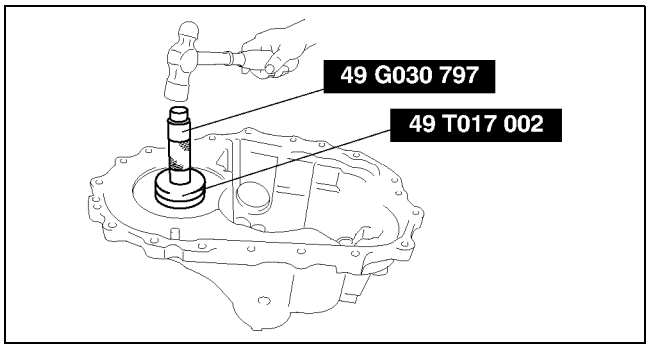

AME5112M038

7. Install the differential to the clutch housing.

   Caution
   - **Installing the primary shaft can damage the oil seal, reducing the performance of the transaxle. When installing the primary shaft to the clutch housing, be careful not to damage it.**

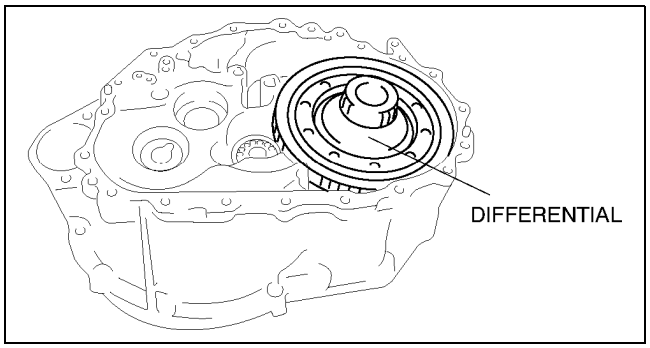

AME5112M022

8. Install the primary shaft component, secondary shaft component, and reverse idler component to the clutch housing at the same time.

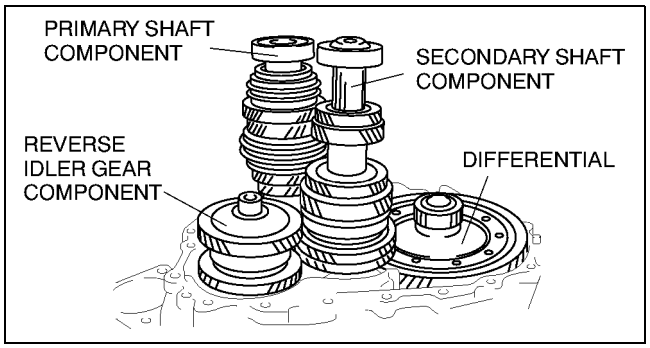

AME5112M014

9. Install the 1st /2nd bracket to the 1st/2nd fork rod, and install a new retaining pin.

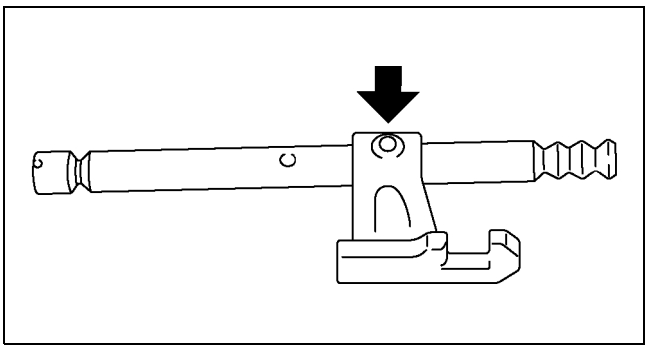

AME5112M023

10. Install the 1st/2nd fork rod and 1st/2nd shift fork to the clutch housing, and install a new retaining pin.
11. Install the shift check sleeve.
12. Install the interlock pin to the 3rd/4th fork rod.
13. Install the 3rd/4th bracket, 3rd/4th shift fork, and 3rd/4th fork rod to the clutch housing.

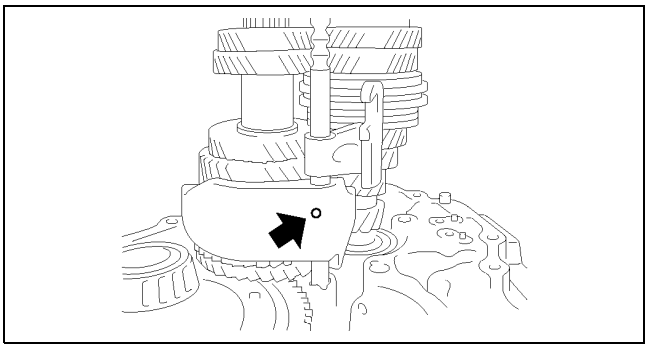

AME5112M013

14. Install a new C ring to the 3rd/4th shift fork.
15. Install a new retaining pin to the 3rd/4th bracket.
16. Install two check balls.
17. Install the 5th/reverse bracket, 5th shift fork, and 5th/reverse fork rod.

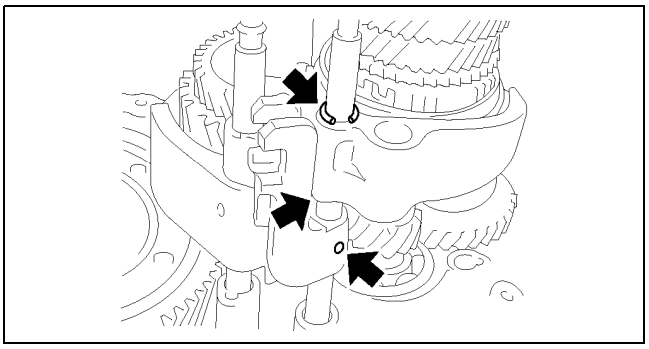

AME5112M012

18. Install a new C ring to the 5th/reverse fork rod.
19. Install a new retaining pin to the 5th shift fork.
20. Install the reverse shift fork and reverse fork rod.

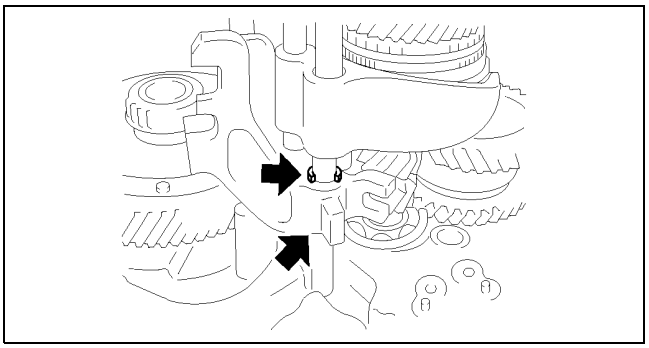

AME5112M011

21. Install the reverse lever component.
    (1) Install the cap to the cam part of the reverse lever component, and the reverse lever component to the reverse shift fork.

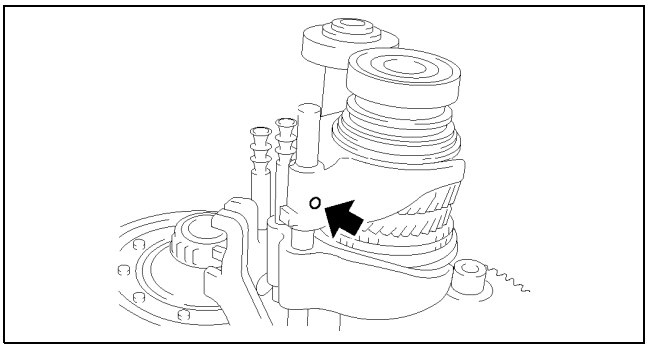

AME5112M010

(2) Lift the reverse shift fork, and install the cam part of the reverse lever component to the 5th/reverse bracket.

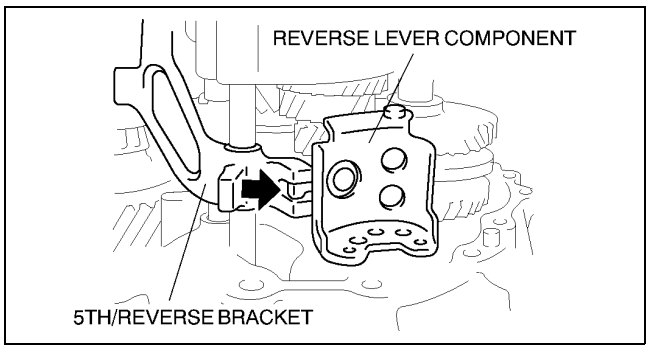

AME5112M024

(3) Install a new reverse lever component installation bolt.

Tightening torque
11.8—15.6 N·m
{1.20—1.59 kgf·m, 8.7—11.5 ft·lbf}

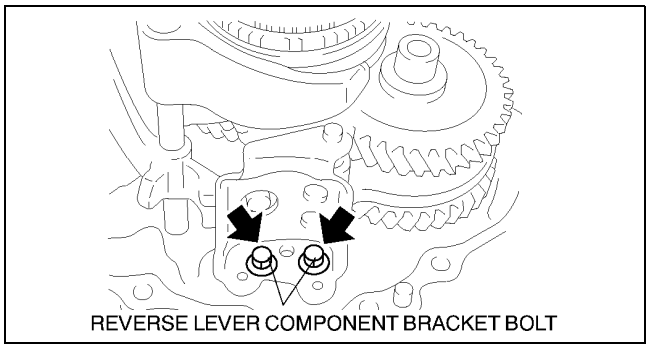

AME5112M009

Note
- When install the check ball, keep the check ball from dropping into the mold groove of the hole.

22. Install the check ball, the shift check sleeve (5th/reverse), the check spring (5th/reverse), and a new check plug (5th/reverse).
23. Install the magnet to the clutch housing.
24. Install a new differential oil seal to the transaxle case using the **SSTs** so that the seal is flush with the case surface.
25. Adjust the primary shaft end play. (See J–35 PRIMARY SHAFT END PLAY ADJUSTMENT.)
26. Install the primary shaft adjustment shim to the primary shaft.
27. Install the baffle plate and oil pass.
28. Install the transaxle case.
    (1) Adjust the secondary shaft end play. (See J–36 SECONDARY SHAFT END PLAY ADJUSTMENT.)
    (2) Install the secondary shaft rear bearing adjustment shim to the transaxle case.
    (3) Install a new snap ring of the secondary shaft rear bearing to the transaxle case.
    (4) Apply a light coat of silicone sealant to the contact surfaces of the transaxle case and the clutch housing.

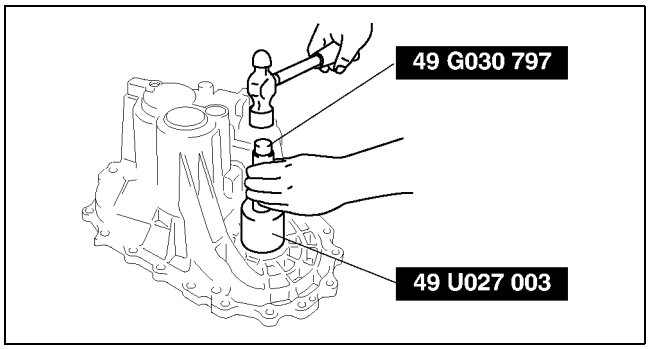

AME5112M104

Sealant
Three Bond product: TB1215

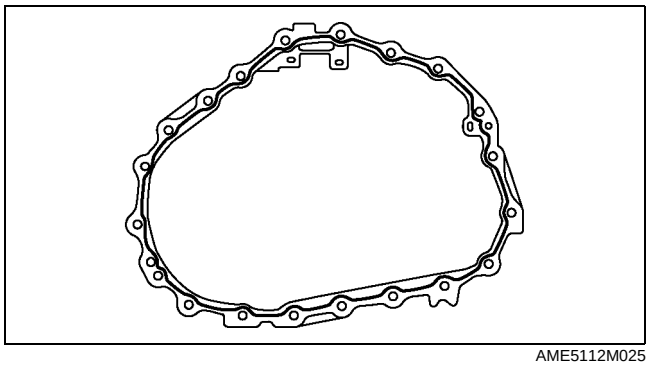
AME5112M025

(5) Place the transaxle case to the clutch housing.

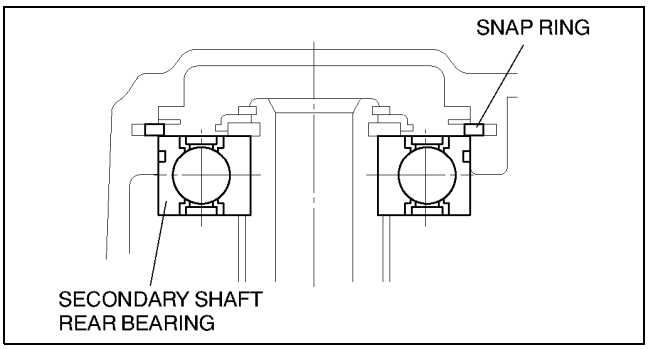

AME5112M026

(6) Stretch the snap ring at the bore plug hole while lifting the secondary shaft at the control component installation hole.
(7) Install the snap ring to the groove of the secondary shaft rear bearing.

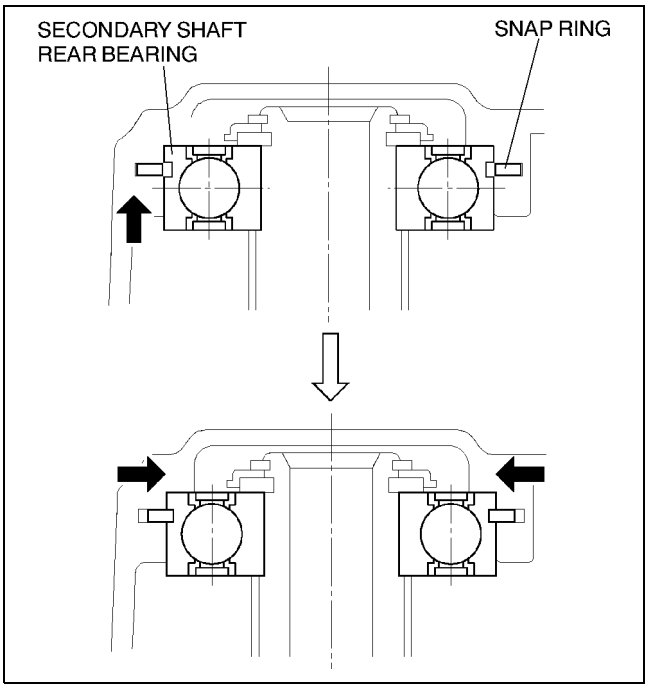

AME5112M100

(8) Install the A bolt and a new B bolt to the transaxle case as shown in the figure.

Tightening torque
A: 50.0—53.9 N·m
{5.1—5.5 kgf·m, 36.9—39.8 ft·lbf}
B: 63.0—66.9 N·m
{6.4—6.8 kgf·m, 46.5—49.3 ft·lbf}

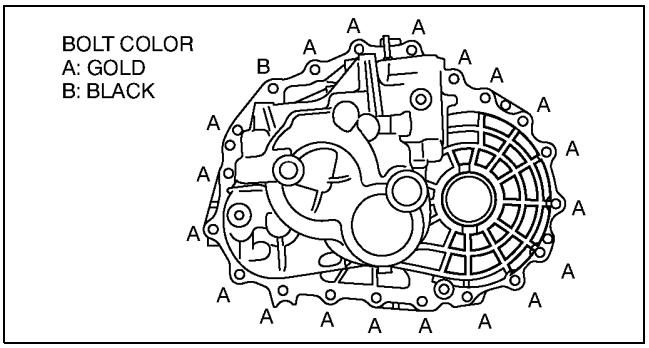

AME5112M027

29. Install a new bore plug using the **SSTs**.

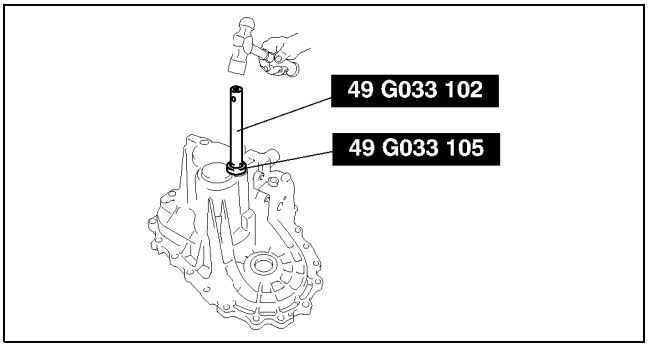

AME5112M028

30. Install a new welt plug using the **SSTs**.

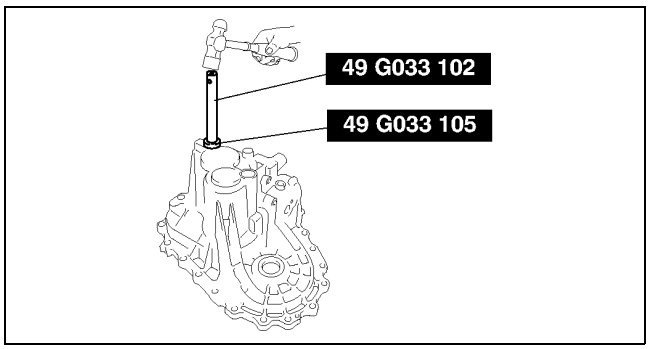

AME5112M029

31. Install the shift check sleeve, the check balls, check springs, and a new check ball plugs as shown in the figure.

    Tightening torque
    12.7—17.0 N·m
    {1.30—1.73 kgf·m, 9.4—12.5 ft·lbf}

32. Install a new O ring to the control component.

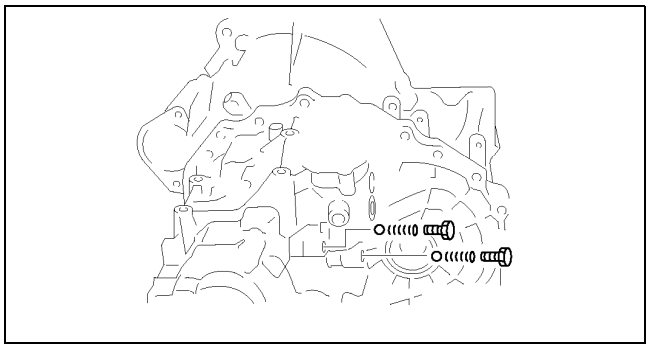
AME5112M099

33. Install the control component.

    Tightening torque
    6.30—8.30 N·m
    {0.64—0.85 kgf·m, 4.65—6.12 ft·lbf}

34. Install a new shift check bolt.

    Tightening torque
    22.5—25.5 N·m
    {2.29—2.60 kgf·m, 16.6—18.8 ft·lbf}

35. Install a new stopper bolt.

    Tightening torque
    26.5—30.4 N·m
    {2.70—3.10 kgf·m, 19.5—22.4 ft·lbf}

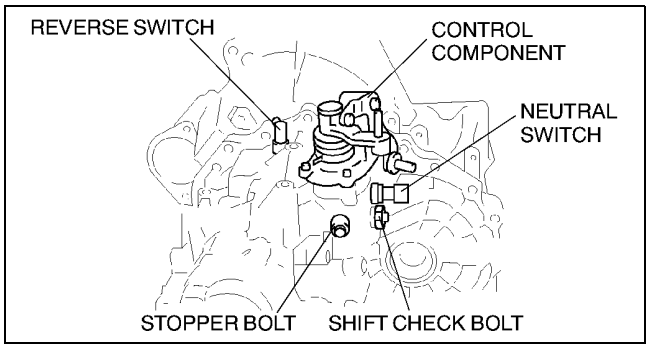

AME5112M098

36. Apply a light coat of silicone sealant to the screw of the neutral switch, and install it to the transaxle case.

    Sealant
    Three Bond product: TB1215
    Tightening torque
    22.5—33.3 N·m {2.29—3.40 kgf·m, 16.6—24.6 ft·lbf}

37. Apply a light coat of silicone sealant to the screw of the reverse switch, and install it to the transaxle case.

    Sealant
    Three Bond product: TB1215
    Tightening torque
    22.5—33.3 N·m {2.29—3.40 kgf·m, 16.6—24.6 ft·lbf}

38. Install a new drain plug.

    Tightening torque
    30.0—39.0 N·m {3.06—3.98 kgf·m, 22.1—28.8 ft·lbf}

39. Install a new gasket to the filler cap, and Install it to the transaxle case.

    Tightening torque
    30.0—39.0 N·m {3.06—3.98 kgf·m, 22.1—28.8 ft·lbf}

TECHNICAL DATA

TECHNICAL DATA TD-2
MANUAL TRANSAXLE TD-2

TECHNICAL DATA

MANUAL TRANSAXLE

AME931001029M01

Item				Specification
Transaxle type				A65M-R
Gear clearance	1st gear	End play	(mm {in})	0.20—0.30 {0.0078—0.0118}
	2nd gear	End play	(mm {in})	0.06—0.16 {0.0024—0.0063}
	3rd gear	Thrust clearance	(mm {in})	0.18—0.31 {0.0071—0.0122}
	4th gear	End play	(mm {in})	0.20—0.30 {0.0078—0.0118}
	5th gear	Thrust clearance	(mm {in})	0.06—0.16 {0.0024—0.0063}
Synchronizer ring	1st gear	Clearance B*1	(mm {in})	0.60—1.10 {0.0236—0.0433}
		Clearance C*1	(mm {in})	0.60—0.80 {0.0236—0.0315}
	2nd gear	Clearance A*1	(mm {in})	0.60—1.20 {0.0236—0.0472}
		Clearance B*1	(mm {in})	0.60—1.10 {0.0236—0.0433}
		Clearance C*1	(mm {in})	0.70—1.10 {0.0276—0.0433}
	3rd gear	Clearance	(mm {in})	0.90—1.45 {0.035—0.057}
	4th gear	Clearance	(mm {in})	0.90—1.45 {0.035—0.057}
	5th gear	Clearance	(mm {in})	0.95—1.40 {0.037—0.055}
	Reverse idler gear	Clearance	(mm {in})	0.95—1.40 {0.037—0.055}
Primary shaft	End play		(mm {in})	0.00—0.06 {0.0000—0.0024}
	Adjustment shim thickness		(mm {in})	0.40 {0.016}, 0.44 {0.017}, 0.48 {0.019}, 0.52 {0.020}, 0.56 {0.022}, 0.60 {0.024}, 0.64 {0.025}, 0.68 {0.027}, 0.72 {0.028}, 0.76 {0.030}, 0.80 {0.031}, 0.84{0.033}, 0.88 {0.035}, 0.92 {0.036}, 0.96 {0.038}, 1.00 {0.039}, 1.04 {0.041}, 1.08 {0.043}, 1.12 {0.044}, 1.16 {0.046}, 1.20 {0.047}, 1.24 {0.049}, 1.28 {0.050}, 1.32 {0.052}, 1.36 {0.054}, 1.40 {0.055}, 1.44 {0.057}, 1.48 {0.058}, 1.52 {0.060}, 1.56 {0.061}, 1.60 {0.063}, 1.64 {0.065}, 1.68 {0.66}, 1.72 {0.68}
Secondary shaft	End play		(mm {in})	0.00—0.06 {0.0000—0.0024}
	Adjustment shim thickness		(mm {in})	0.40 {0.016}, 0.48 {0.019}, 0.52 {0.020}, 0.56 {0.022}, 0.60 {0.024}, 0.64 {0.025}, 0.68 {0.027}, 0.72 {0.028}, 0.76 {0.030}, 0.80 {0.031}, 0.84 {0.033}, 0.88 {0.035}, 0.92 {0.036}, 0.96 {0.038}, 1.00 {0.039}, 1.04 {0.041}, 1.08 {0.043}
Reverse idler gear	End play		(mm {in})	0.04—0.10 {0.0016—0.0039}
	Adjustment shim thickness		(mm {in})	1.76 {0.069}, 1.80 {0.070}, 1.84 {0.072}, 1.88 {0.074}, 1.92 {0.076}, 1.96 {0.077}, 2.00 {0.007}, 2.04 {0.080}, 2.08 {0.082}, 2.12 {0.083}, 2.16 {0.085}, 2.20 {0.087}, 2.24 {0.088}, 2.28 {0.090}, 2.32 {0.091}, 2.36 {0.093}, 2.40 {0.094}, 2.44 {0.096}, 2.48 {0.098}, 2.52 {0.099}, 2.56 {0.101}, 2.60 {0.102}, 2.64 {0.104}
Primary shaft thrust washer	Thickness		(mm {in})	3.84 {0.151}, 3.90 {0.154}, 3.96 {0.156}, 4.02 {0.158}, 4.08 {0.161}, 4.14 {0.163}
Primary shaft snap ring	Thickness		(mm {in})	1.71 {0.067}, 1.76 {0.069}, 1.81 {0.071}, 1.86 {0.073}, 1.91 {0.075}, 1.96 {0.077}, 2.01 {0.079}, 2.06 {0.081}, 2.11 {0.083}, 2.16 {0.085}, 2.21 {0.087}, 2.26 {0.089}
4th gear adjustment shim	Thickness		(mm {in})	0.52 {0.021}, 0.60 {0.024}, 0.68 {0.027}, 0.76 {0.030}, 0.84 {0.033}, 0.92 {0.036}, 1.00 {0.039}, 1.08 {0.043}

Item			Specification
5th gear snap ring	Thickness	(mm {in})	1.85 {0.073}, 1.90 {0.075}, 1.95 {0.077}, 2.00 {0.079}, 2.05 {0.081}, 2.10 {0.083}, 2.15 {0.085}, 2.20 {0.087}
Secondary shaft C ring	Thickness	(mm {in})	2.535 {0.0998}, 2.565 {0.1010}, 2.595 {0.1022}, 2.625 {0.1033}, 2.655 {0.1045}, 2.685 {0.1057}, 2.715 {0.1069}, 2.745 {0.1081}, 2.775 {0.1093}, 2.805 {0.1104}, 2.835 {0.1116}, 2.865 {0.1128}, 2.895 {0.1140}, 2.925 {0.1152}, 2.955 {0.1163}, 2.985 {0.1175}, 3.015 {0.1187}, 3.045 {0.1199}, 3.075 {0.1211}
Differential	Preload	(mm {in})	0.15—0.21 {0.0059—0.0083}
	Adjustment shim thickness	(mm {in})	0.48 {0.019}, 0.52 {0.020}, 0.56 {0.022}, 0.60 {0.024}, 0.64 {0.025}, 0.68 {0.027}, 0.72 {0.028}, 0.76 {0.030}, 0.80 {0.031}, 0.84 {0.033}, 0.88 {0.035}, 0.92 {0.036}
	Backlash of side gear and pinion gear	(mm {in})	0.10—0.20 {0.0039—0.0079}

*1 : Measure the clearance A, B or C as shown in the figure.

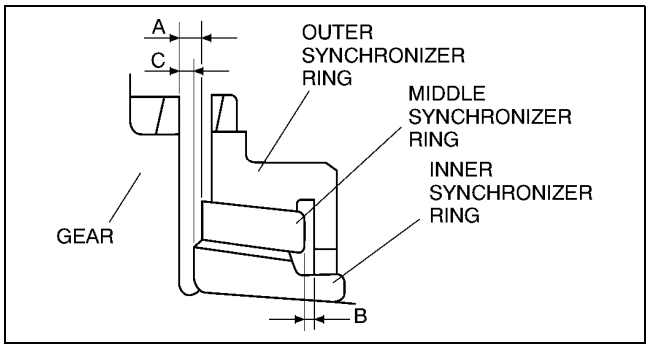

AME5112M092

SPECIAL TOOLS

SPECIAL TOOLS ST-2
MANUAL TRANSAXLE ST-2

SPECIAL TOOLS

MANUAL TRANSAXLE

AME941001029M01

49 0710 520 Bearing puller 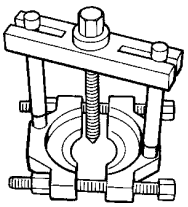	49 0727 415 Bearing installer 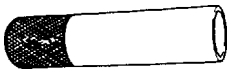	49 0839 425C Bearing puller set 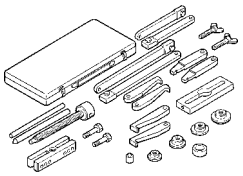
498 B019 014 Removing plate 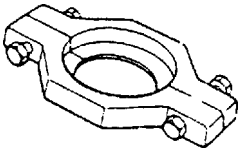	49 F026 103 Wheel hub puller 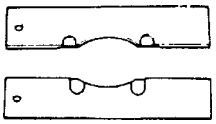	49 F401 331 Body 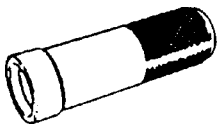
49 F401 336B Attachment B 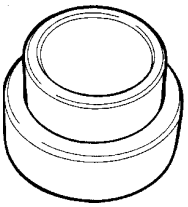	49 F401 337A Attachment C 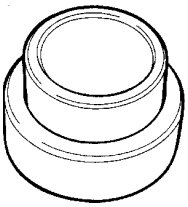	49 G027 002 Bearing remover 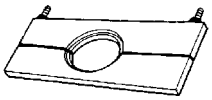
49 G030 797 Handle 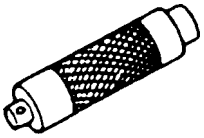	49 G033 102 Handle 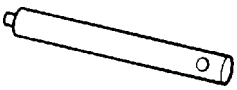	49 G033 105 Attachment 
49 H010 401 Oil seal installer 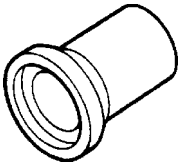	49 H027 002 Bearing remover 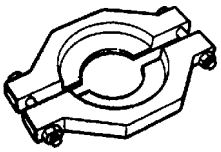	49 P005 205 Oil seal installer 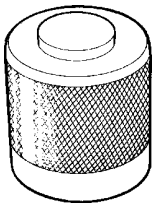
49 S231 506 Body 	49 T017 002 Bearing installer 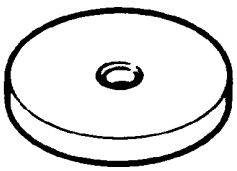	49 U027 003 Oil seal installer 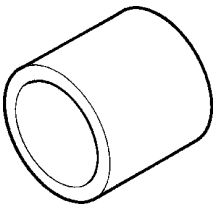
49 W032 2A0 Bearing remover set 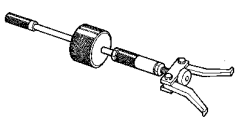	49 G030 796 Body 	—

Manual Transaxle Workshop Manual G35M–R

FOREWORD

This manual explains the mechanism, operation, and service points for the above-indicated manual transaxle. In order to do these procedures safety, quickly, and correctly, you must first read this manual and any other relevant service materials carefully.

The information in this manual is current up to March, 2002. Any changes that occur after that time will not be reflected in this particular manual. Therefore, the contents of this manual may not exactly match the mechanism that you are currently serving.

Mazda Motor Corporation
HIROSHIMA, JAPAN

CONTENTS

Title	Section
General Information	GI
Manual Transaxle	J
Technical Data	TD
Special Tools	ST

© 2002 Mazda Motor Corporation
PRINTED IN The Netherlands, MARCH 2002
1732–1E–02C

WARNING

Servicing a vehicle can be dangerous. If you have not received service-related training, the risks of injury, property damage, and failure of servicing increase. The recommended servicing procedures for the vehicle in this workshop manual were developed with Mazda-trained technicians in mind. This manual may be useful to non-Mazda trained technicians, but a technician with our service-related training and experience will be at less risk when performing service operations. However, all users of this manual are expected to at least know general safety procedures.

This manual contains "Warnings" and "Cautions" applicable to risks not normally encountered in a general technician's experience. They should be followed to reduce the risk of injury and the risk that improper service or repair may damage the vehicle or render it unsafe. It is also important to understand that the "Warnings" and "Cautions" are not exhaustive. It is impossible to warn of all the hazardous consequences that might result from failure to follow the procedures.

The procedures recommended and described in this manual are effective methods of performing service and repair. Some require tools specifically designed for a specific purpose. Persons using procedures and tools which are not recommended by Mazda Motor Corporation must satisfy themselves thoroughly that neither personal safety nor safety of the vehicle will be jeopardized.

The contents of this manual, including drawings and specifications, are the latest available at the time of printing, and Mazda Motor Corporation reserves the right to change the vehicle designs and alter the contents of this manual without notice and without incurring obligation.

Parts should be replaced with genuine Mazda replacement parts or with parts which match the quality of genuine Mazda replacement parts. Persons using replacement parts of lesser quality than that of genuine Mazda replacement parts must satisfy themselves thoroughly that neither personal safety nor safety of the vehicle will be jeopardized.

Mazda Motor Corporation is not responsible for any problems which may arise from the use of this manual. The cause of such problems includes but is not limited to insufficient service-related training, use of improper tools, use of replacement parts of lesser quality than that of genuine Mazda replacement parts, or not being aware of any revision of this manual.

GENERAL INFORMATION

HOW TO USE THIS MANUAL GI-2
RANGE OF TOPICS GI-2
SERVICING PROCEDURE GI-2
SYMBOLS GI-4
ADVISORY MESSAGES GI-4
UNITS GI-5
UNITS TABLE GI-5
FUNDAMENTAL PROCEDURES GI-6
PREPARATION OF TOOLS AND MEASURING EQUIPMENT GI-6
SPECIAL SERVICE TOOLS GI-6
DISASSEMBLY GI-6
INSPECTION DURING REMOVAL, DISASSEMBLY GI-6
ARRANGEMENT OF PARTS GI-7
CLEANING OF PARTS GI-7
REASSEMBLY GI-7
ADJUSTMENT GI-8
RUBBER PARTS AND TUBING GI-8
HOSE CLAMPS GI-8
TORQUE FORMULAS GI-8
VISE GI-9
ELECTRICAL SYSTEM GI-9
CONNECTORS GI-9
NEW STANDARDS GI-12
NEW STANDARDS TABLE GI-12
ABBREVIATIONS GI-14
ABBREVIATIONS TABLE GI-14

HOW TO USE THIS MANUAL

RANGE OF TOPICS

A6E201000001M01

- This manual contains procedures for performing all required service operations. The procedures are divided into the following five basic operations:
  — Removal/Installation
  — Disassembly/Assembly
  — Replacement
  — Inspection
  — Adjustment
- Simple operations which can be performed easily just by looking at the vehicle (i.e., removal/installation of parts, jacking, vehicle lifting, cleaning of parts and visual inspection) have been omitted.

SERVICING PROCEDURE

A6E201000001M02

Inspection, Adjustment

- Inspection and adjustment procedures are divided into steps. Important points regarding the location and contents of the procedures are explained in detail and shown in the illustrations.

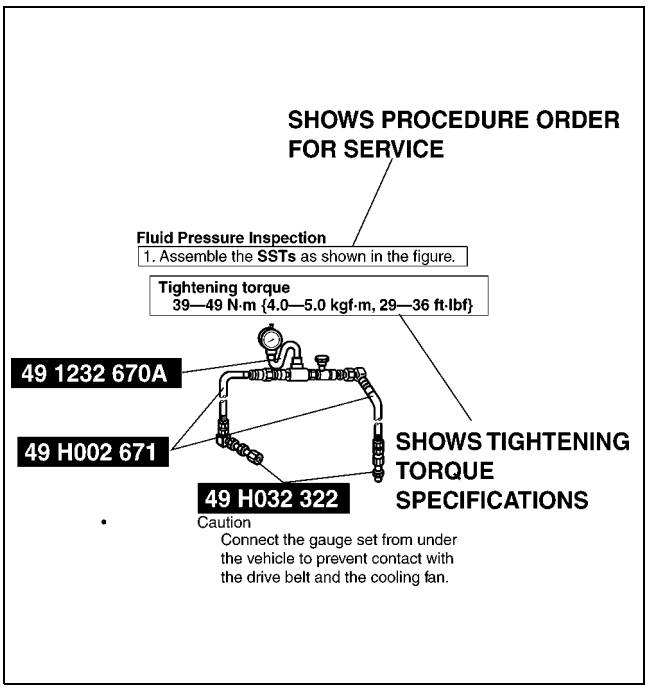

XME2010001

Repair Procedure

1. Most repair operations begin with an overview illustration. It identifies the components, shows how the parts fit together, and describes visual part inspection. However, only removal/installation procedures that need to be performed methodically have written instructions.
2. Expendable parts, tightening torques, and symbols for oil, grease, and sealant are shown in the overview illustration. In addition, symbols indicating parts requiring the use of special service tools or equivalent are also shown.
3. Procedure steps are numbered and the part that is the main point of the procedure is shown in the illustration with the corresponding number. Occasionally, there are important points or additional information concerning a procedure. Refer to this information when servicing the related part.

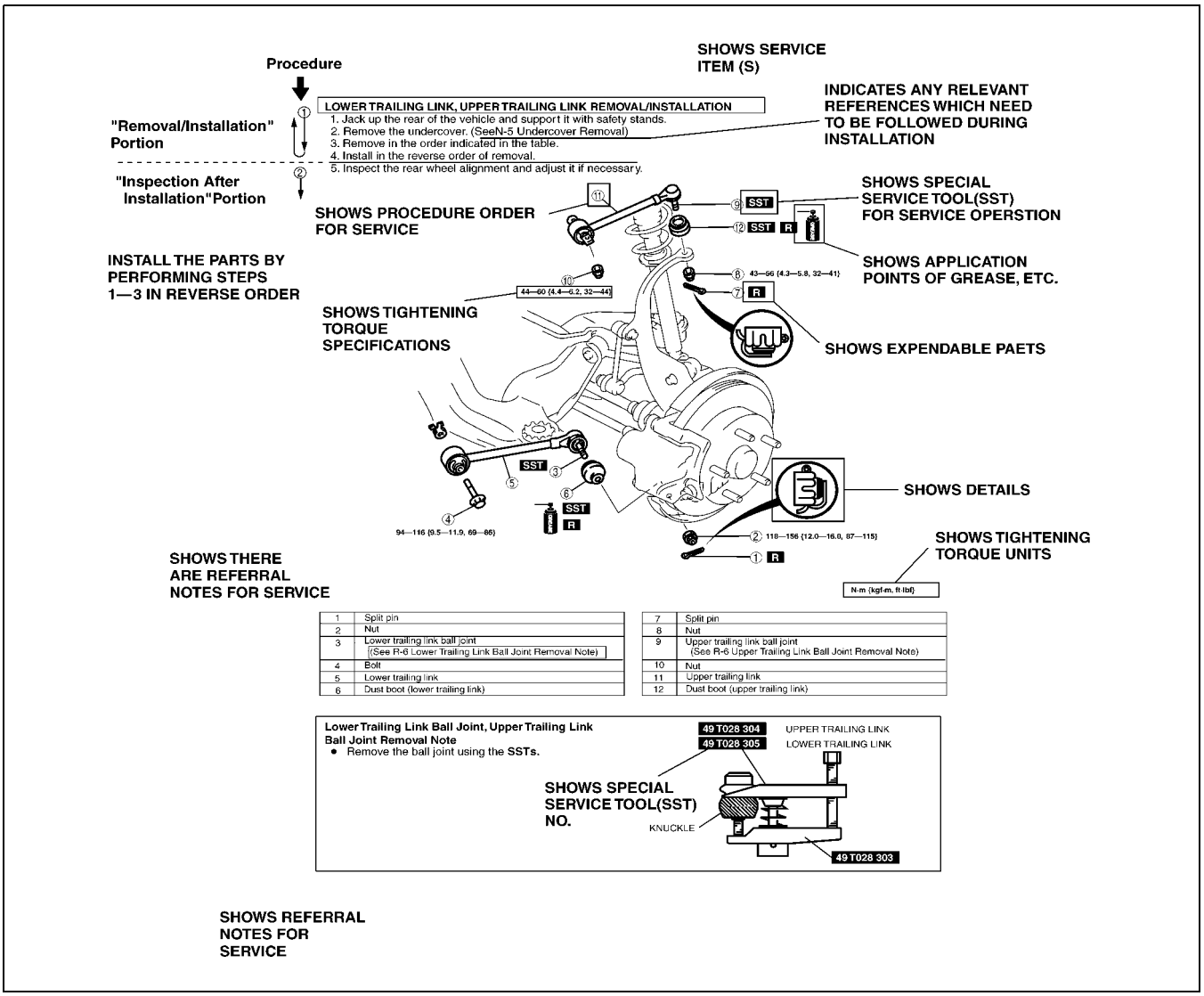

XME2010010

SYMBOLS

A6E201000001M03

- There are eight symbols indicating oil, grease, fluids, sealant, and the use of **SST** or equivalent. These symbols show application points or use of these materials during service.

Symbol	Meaning	Kind
	Apply oil	New appropriate engine oil or gear oil
	Apply brake fluid	New appropriate brake fluid
	Apply automatic transaxle/transmission fluid	New appropriate automatic transaxle/transmission fluid
	Apply grease	Appropriate grease
	Apply sealant	Appropriate sealant
	Apply petroleum jelly	Appropriate petroleum jelly
R	Replace part	O-ring, gasket, etc.
SST	Use SST or equivalent	Appropriate tools

ADVISORY MESSAGES

A6E201000001M04

- You will find several **Warnings**, **Cautions**, **Notes**, **Specifications** and **Upper and Lower Limits** in this manual.

Warning

- A Warning indicates a situation in which serious injury or death could result if the warning is ignored.

Caution

- A Caution indicates a situation in which damage to the vehicle or parts could result if the caution is ignored.

Note

- A Note provides added information that will help you to complete a particular procedure.

Specifications

- The values indicate the allowable range when performing inspections or adjustments.

Upper and Lower Limits

- The values indicate the upper and lower limits that must not be exceeded when performing inspections or adjustments.

UNITS

UNITS TABLE

A6E201200002M01

Electrical current	A (ampere)
Electric power	W (watt)
Electric resistance	ohm
Electric voltage	V (volt)
Length	mm (millimeter)
	in (inch)
Negative pressure	kPa (kilo pascal)
	mmHg (millimeters of mercury)
	inHg (inches of mercury)
Number of revolutions	rpm (revolutions per minute)
Positive pressure	kPa (kilo pascal)
	kgf/cm^2 (kilogram force per square centimeter)
	psi (pounds per square inch)
Torque	N·m (Newton meter)
	kgf·m (kilogram force meter)
	kgf·cm (kilogram force centimeter)
	ft·lbf (foot pound force)
	in·lbf (inch pound force)

Volume	L (liter)
	US qt (U.S. quart)
	imp qt (Imperial quart)
	ml (milliliter)
	cc (cubic centimeter)
	cu in (cubic inch)
	fl oz (fluid ounce)
Weight	N (Newton)
	g (gram)
	oz (ounce)

Conversion to SI Units (Système International d'Unités)

- All numerical values in this manual are based on SI units. Numbers shown in conventional units are converted from these values.

Rounding Off

- Converted values are rounded off to the same number of places as the SI unit value. For example, if the SI unit value is 17.2 and the value after conversion is 37.84, the converted value will be rounded off to 37.8.

Upper and Lower Limits

- When the data indicates upper and lower limits, the converted values are rounded down if the SI unit value is an upper limit and rounded up if the SI unit value is a lower limit. Therefore, converted values for the same SI unit value may differ after conversion. For example, consider 2.7 kgf/cm^2 in the following specifications:

  210—260 kPa {2.1—2.7 kgf/cm^2, 30—38 psi}
  270—310 kPa {2.7—3.2 kgf/cm^2, 39—45 psi}

- The actual converted values for 2.7 kgf/cm^2 are 265 kPa and 38.4 psi. In the first specification, 2.7 is used as an upper limit, so the converted values are rounded down to 260 and 38. In the second specification, 2.7 is used as a lower limit, so the converted values are rounded up to 270 and 39.

FUNDAMENTAL PROCEDURES

PREPARATION OF TOOLS AND MEASURING EQUIPMENT

- Be sure that all necessary tools and measuring equipment are available before starting any work.

A6E201400004M01

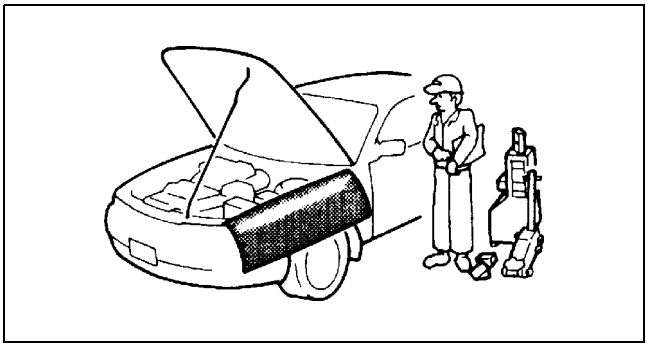

WGIWXX0023E

SPECIAL SERVICE TOOLS

- Use special service tools or equivalent when they are required.

A6E201400004M02

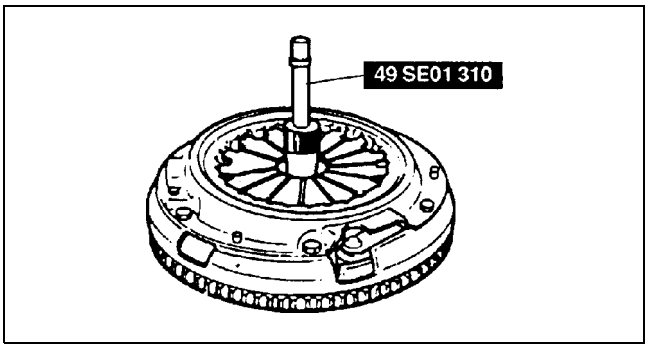

WGIWXX0024E

DISASSEMBLY

- If the disassembly procedure is complex, requiring many parts to be disassembled, all parts should be marked in a place that will not affect their performance or external appearance and identified so that reassembly can be performed easily and efficiently.

A6E201400004M03

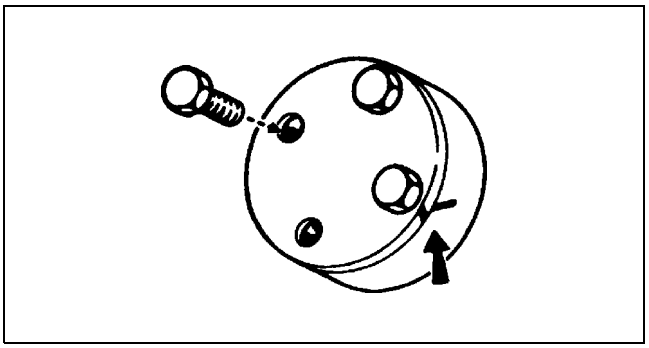

WGIWXX0027E

INSPECTION DURING REMOVAL, DISASSEMBLY

- When removed, each part should be carefully inspected for malfunction, deformation, damage, and other problems.

A6E201400004M04

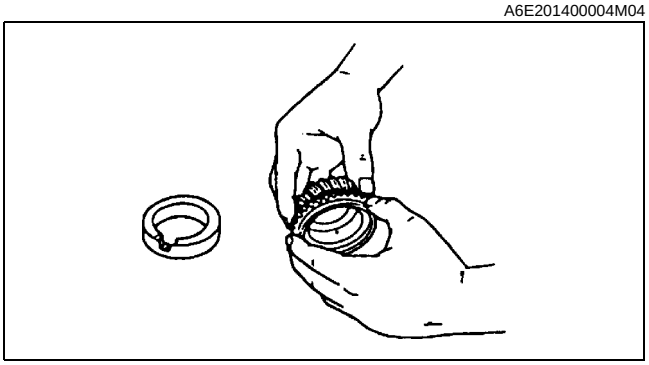

WGIWXX0028E

ARRANGEMENT OF PARTS

- All disassembled parts should be carefully arranged for reassembly.
- Be sure to separate or otherwise identify the parts to be replaced from those that will be reused.

A6E201400004M05

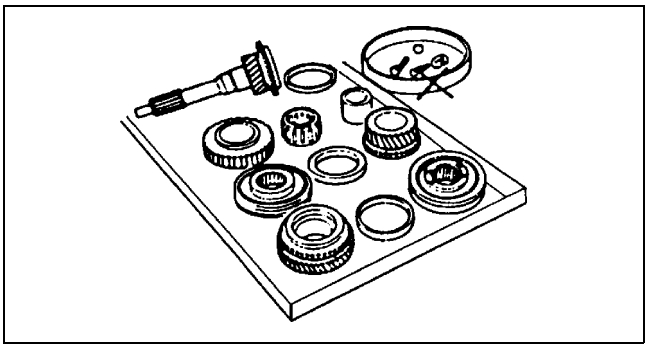

WGIWXX0029E

CLEANING OF PARTS

- All parts to be reused should be carefully and thoroughly cleaned in the appropriate method.

  Warning
  - **Using compressed air can cause dirt and other particles to fly out causing injury to the eyes. Wear protective eye wear whenever using compressed air.**

A6E201400004M06

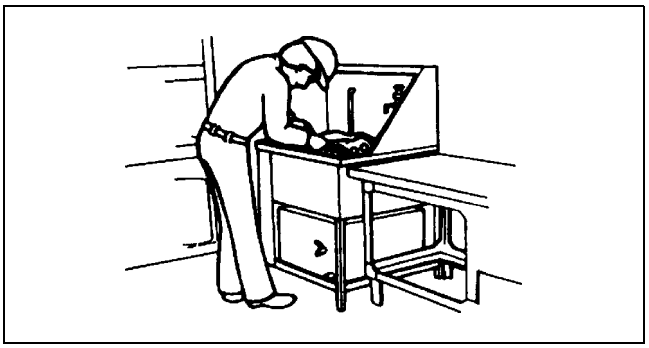

WGIWXX0030E

REASSEMBLY

- Standard values, such as torques and certain adjustments, must be strictly observed in the reassembly of all parts.
- If removed, these parts should be replaced with new ones:
  - — Oil seals
  - — Gaskets
  - — O-rings
  - — Lockwashers
  - — Cotter pins
  - — Nylon nuts

A6E201400004M07

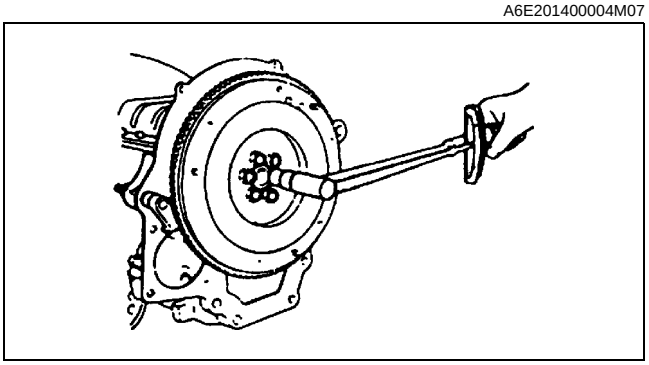

WGIWXX0031E

- Depending on location:
  - — Sealant and gaskets, or both, should be applied to specified locations. When sealant is applied, parts should be installed before sealant hardens to prevent leakage.
  - — Oil should be applied to the moving components of parts.
  - — Specified oil or grease should be applied at the prescribed locations (such as oil seals) before reassembly.

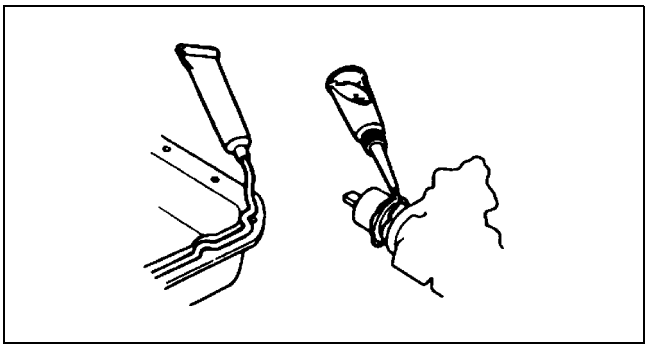

WGIWXX0032E

ADJUSTMENT

- Use suitable gauges and/or testers when making adjustments.

A6E201400004M08

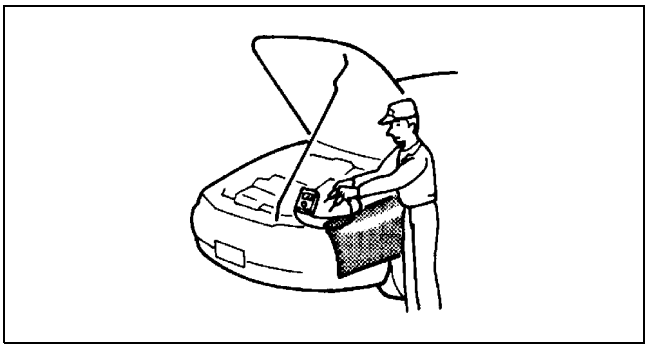

WGIWXX0033E

RUBBER PARTS AND TUBING

- Prevent gasoline or oil from getting on rubber parts or tubing.

A6E201400004M09

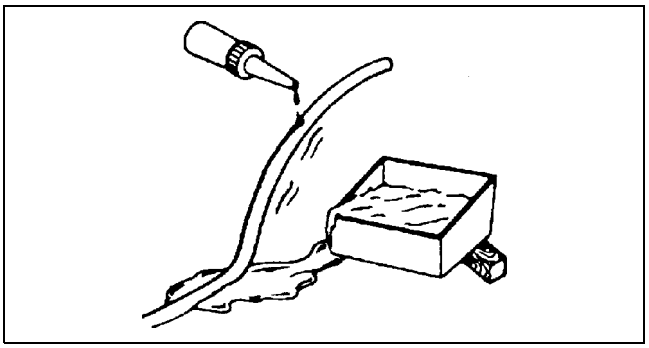

WGIWXX0034E

HOSE CLAMPS

- When reinstalling, position the hose clamp in the original location on the hose and squeeze the clamp lightly with large pliers to ensure a good fit.

A6E201400004M10

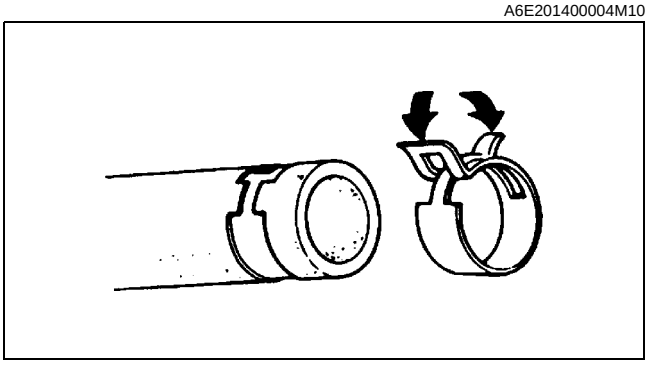

WGIWXX0035E

TORQUE FORMULAS

- When using a torque wrench-SST or equivalent combination, the written torque must be recalculated due to the extra length that the SST or equivalent adds to the torque wrench. Recalculate the torque using the following formulas. Choose the formula that applies to you.

Torque Unit	Formula
N·m	N·m × [L/(L+A)]
kgf·m	kgf·m × [L/(L+A)]
kgf·cm	kgf·cm × [L/(L+A)]
ft·lbf	ft·lbf × [L/(L+A)]
in·lbf	in·lbf × [L/(L+A)]

A : The length of the **SST** past the torque wrench drive
L : The length of the torque wrench

A6E201400004M11

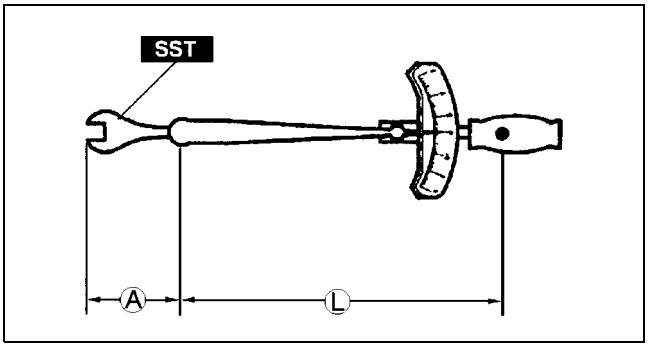

WGIWXX0036E

VISE

- When using a vise, put protective plates in the jaws of the vise to prevent damage to parts.

A6E201400004M12

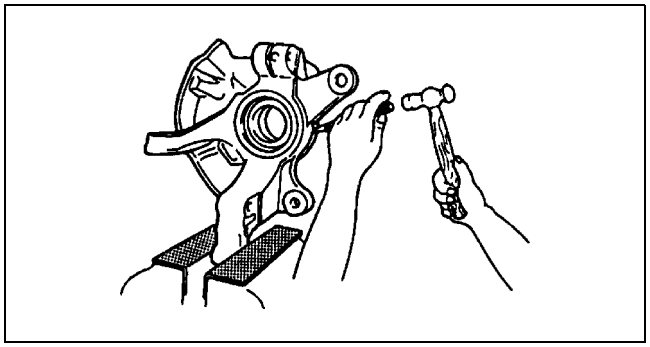

WGIWXX0037E

ELECTRICAL SYSTEM

CONNECTORS

A6E201700006M01

Data Link Connector

- Insert the probe into the service hole when connecting a jumper wire to the data link connector.

Caution

- **Inserting a jumper wire probe into the data link connector terminal may damage the terminal.**

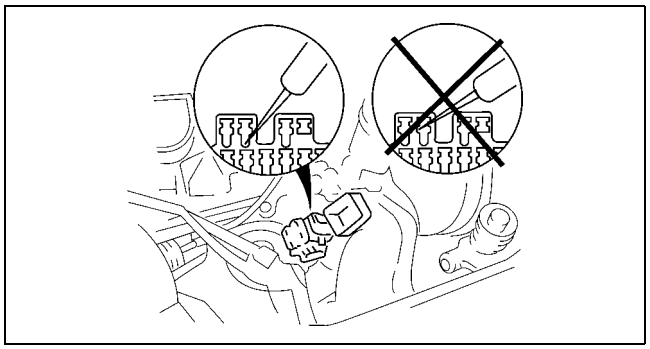

X3U000WAY

Disconnecting Connectors

- When disconnecting connector, grasp the connectors, not the wires.

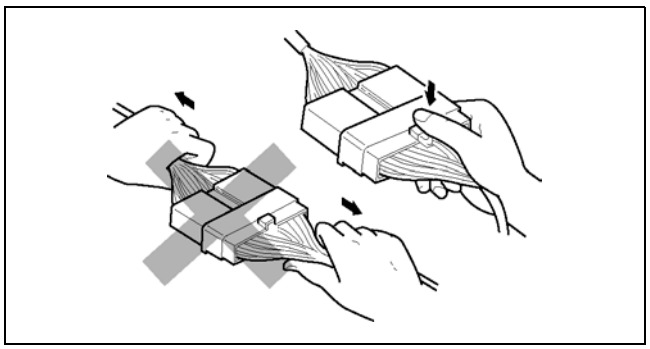

WGIWXX0041E

- Connectors can be disconnected by pressing or pulling the lock lever as shown.

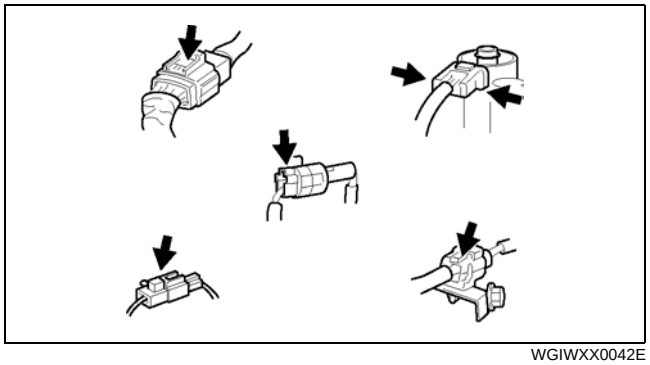

WGIWXX0042E

Locking Connector

- When locking connectors, listen for a click indicating they are securely locked.

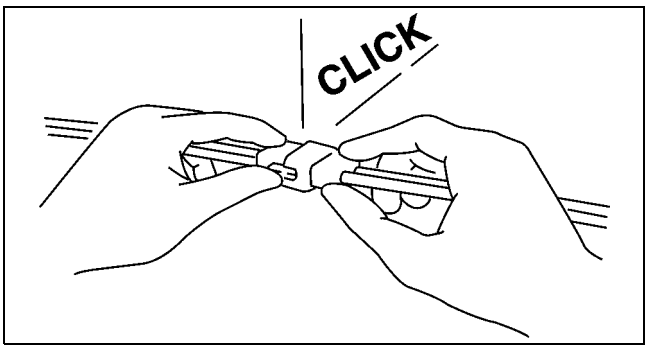

X3U000WB1

Inspection

- When a tester is used to inspect for continuity or measuring voltage, insert the tester probe from the wiring harness side.

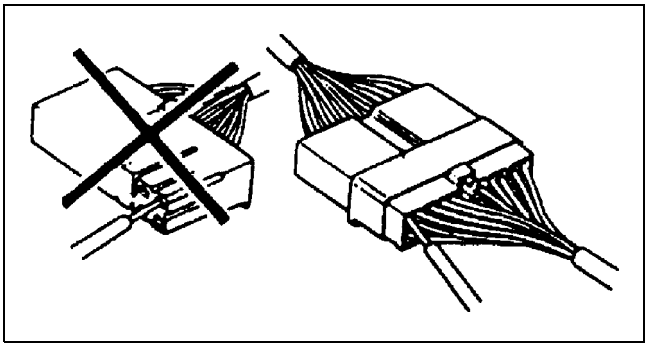

WGIWXX0044E

- Inspect the terminals of waterproof connectors from the connector side since they cannot be accessed from the wiring harness side.

  Caution
  - **To prevent damage to the terminal, wrap a thin wire around the tester probe before inserting into terminal.**

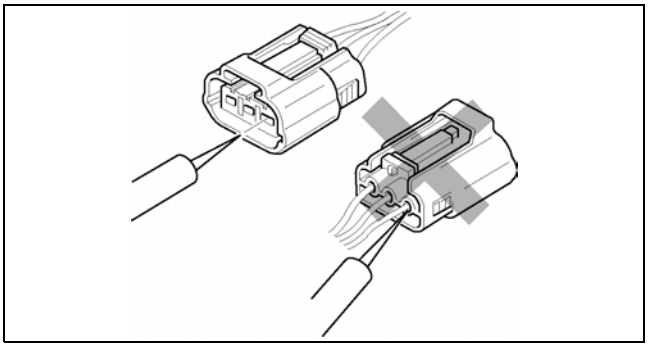

WGIWXX0045E

Terminals
Inspection

- Pull lightly on individual wires to verify that they are secured in the terminal.

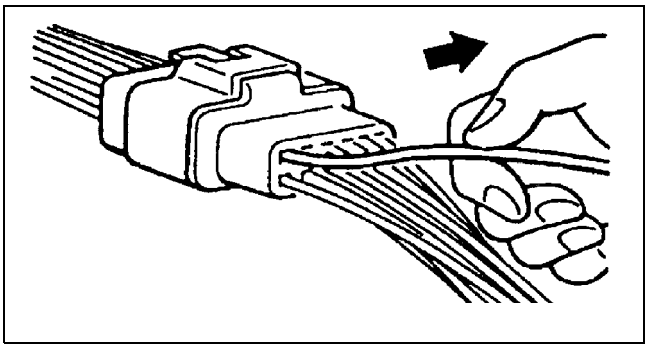

WGIWXX0064E

Replacement

- Use the appropriate tools to remove a terminal as shown. When installing a terminal, be sure to insert it until it locks securely.
- Insert a thin piece of metal from the terminal side of the connector and with the terminal locking tab pressed down, pull the terminal out from the connector.

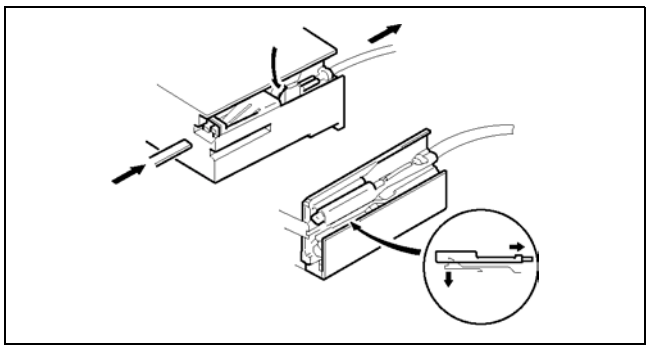

WGIWXX0046E

Sensors, Switches, and Relays

- Handle sensors, switches, and relays carefully. Do not drop them or strike them against other objects.

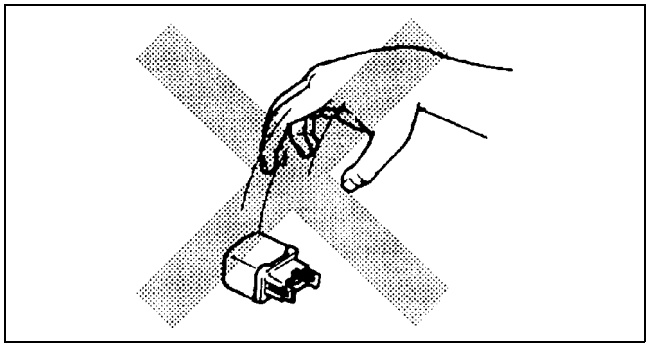

WGIWXX0047E

Wiring Harness
Wiring color codes

- Two-color wires are indicated by a two-color code symbol.
- The first letter indicates the base color of the wire and the second the color of the stripe.

CODE	COLOR	CODE	COLOR
B	Black	O	Orange
BR	Brown	P	Pink
G	Green	R	Red
GY	Gray	V	Violet
L	Blue	W	White
LB	Light Blue	Y	Yellow
LG	Light Green		

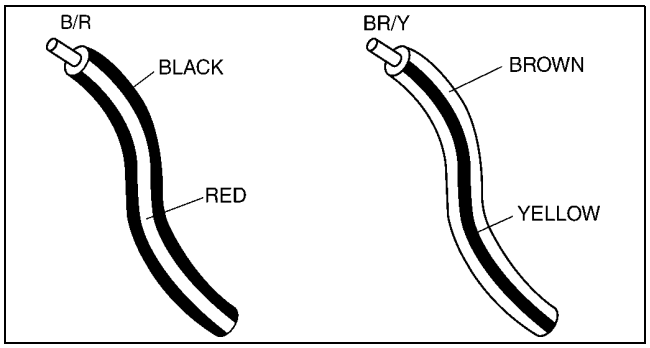

X3U000WB7

NEW STANDARDS

NEW STANDARDS TABLE

A6E202800020M01

- Following is a comparison of the previous standard and the new standard.

New Standard		Previous Standard		Remark
Abbreviation	Name	Abbreviation	Name	
AP	Accelerator Pedal	—	Accelerator Pedal	
ACL	Air Cleaner	—	Air Cleaner	
A/C	Air Conditioning	—	Air Conditioning	
BARO	Barometric Pressure	—	Atmospheric Pressure	
B+	Battery Positive Voltage	V_B	Battery Voltage	
—	Brake Switch	—	Stoplight Switch	
—	Calibration Resistor	—	Corrected Resistance	#6
CMP sensor	Camshaft Position Sensor	—	Crank Angle Sensor	
CAC	Charge Air Cooler	—	Intercooler	
CLS	Closed Loop System	—	Feedback System	
CTP	Closed Throttle Position	—	Fully Closed	
CPP	Clutch Pedal Position	—	Idle Switch	
CIS	Continuous Fuel Injection System	—	Clutch Position	
CS sensor	Control Sleeve Sensor	CSP sensor	Control Sleeve Position Sensor	#6
CKP sensor	Crankshaft Position Sensor	—	Crank Angle Sensor 2	
DLC	Data Link Connector	—	Diagnosis Connector	
DTM	Diagnostic Test Mode	—	Test Mode	#1
DTC	Diagnostic Trouble Code(s)	—	Service Code(s)	
DI	Distributor Ignition	—	Spark Ignition	
DLI	Distributorless Ignition	—	Direct Ignition	
EI	Electronic Ignition	—	Electronic Spark Ignition	#2
ECT	Engine Coolant Temperature	—	Water Thermo	
EM	Engine Modification	—	Engine Modification	
—	Engine Speed Input Signal	—	Engine RPM Signal	
EVAP	Evaporative Emission	—	Evaporative Emission	
EGR	Exhaust Gas Recirculation	—	Exhaust Gas Recirculation	
FC	Fan Control	—	Fan Control	
FF	Flexible Fuel	—	Flexible Fuel	
4GR	Fourth Gear	—	Overdrive	
—	Fuel Pump Relay	—	Circuit Opening Relay	#3
FSO solenoid	Fuel Shut Off Solenoid	FCV	Fuel Cut Valve	#6
GEN	Generator	—	Alternator	
GND	Ground	—	Ground/Earth	
HO2S	Heated Oxygen Sensor	—	Oxygen Sensor	With heater
IAC	Idle Air Control	—	Idle Speed Control	
—	IDM Relay	—	Spill Valve Relay	#6
—	Incorrect Gear Ratio	—	—	
—	Injection Pump	FIP	Fuel Injection Pump	#6
—	Input/Turbine Speed Sensor	—	Pulse Generator	
IAT	Intake Air Temperature	—	Intake Air Thermo	
KS	Knock Sensor	—	Knock Sensor	
MIL	Malfunction Indicator Lamp	—	Malfunction Indicator Light	
MAP	Manifold Absolute Pressure	—	Intake Air Pressure	
MAF sensor	Mass Air Flow Sensor	—	Airflow Sensor	
MFL	Multiport Fuel Injection	—	Multiport Fuel Injection	
OBD	On-Board Diagnostic	—	Diagnosis/Self Diagnosis	
OL	Open Loop	—	Open Loop	

NEW STANDARDS

New Standard		Previous Standard		Remark
Abbreviation	Name	Abbreviation	Name	
—	Output Speed Sensor	—	Vehicle Speed Sensor 1	
OC	Oxidation Catalytic Converter	—	Catalytic Converter	
O2S	Oxygen Sensor	—	Oxygen Sensor	
PNP	Park/Neutral Position	—	Park/Neutral Range	
—	PCM Control Relay	—	Main Relay	#6
PSP	Power Steering Pressure	—	Power Steering Pressure	
PCM	Powertrain Control Module	ECU	Engine Control Unit	#4
—	Pressure Control Solenoid	—	Line Pressure Solenoid Valve	
PAIR	Pulsed Secondary Air Injection	—	Secondary Air Injection System	Pulsed injection
—	Pump Speed Sensor	—	NE Sensor	#6
AIR	Secondary Air Injection	—	Secondary Air Injection System	Injection with air pump
SAPV	Secondary Air Pulse Valve	—	Reed Valve	
SFI	Sequential Multipoint Fuel Injection	—	Sequential Fuel Injection	
—	Shift Solenoid A	—	1-2 Shift Solenoid Valve	
		—	Shift A Solenoid Valve	
—	Shift Solenoid B	—	2-3 Shift Solenoid Valve	
		—	Shift B Solenoid Valve	
—	Shift Solenoid C	—	3-4 Shift Solenoid Valve	
3GR	Third Gear	—	3rd Gear	
TWC	Three Way Catalytic Converter	—	Catalytic Converter	
TB	Throttle Body	—	Throttle Body	
TP sensor	Throttle Position Sensor	—	Throttle Sensor	
TCV	Timer Control Valve	TCV	Timing Control Valve	#6
TCC	Torque Converter Clutch	—	Lockup Position	
TCM	Transmission (Transaxle) Control Module	—	ECAT Control Unit	
—	Transmission (Transaxle) Fluid Temperature Sensor	—	ATF Thermosensor	
TR	Transmission (Transaxle) Range	—	Inhibitor Position	
TC	Turbocharger	—	Turbocharger	
VSS	Vehicle Speed Sensor	—	Vehicle Speed Sensor	
VR	Voltage Regulator	—	IC Regulator	
VAF sensor	Volume Air Flow Sensor	—	Air flow Sensor	
WUTWC	Warm Up Three Way Catalytic Converter	—	Catalytic Converter	#5
WOT	Wide Open Throttle	—	Fully Open	

#1 : Diagnostic trouble codes depend on the diagnostic test mode
#2 : Controlled by the PCM
#3 : In some models, there is a fuel pump relay that controls pump speed. That relay is now called the fuel pump relay (speed).
#4 : Device that controls engine and powertrain
#5 : Directly connected to exhaust manifold
#6 : Part name of diesel engine

ABBREVIATIONS

ABBREVIATIONS TABLE

A6E203000011M01

SST	Special service tool
1st GR	First gear
2nd GR	Second gear
3rd GR	Third gear
4th GR	Forth gear
5th GR	Fifith gear

MANUAL TRANSAXLE

J

MANUAL TRANSAXLE J-2
PRECAUTION J-2
5TH GEAR THRUST CLEARANCE PREINSPECTION J-2
5TH/REVERSE GEAR AND HOUSING PARTS DISASSEMBLY J-3
5TH/REVERSE GEAR AND HOUSING PARTS INSPECTION J-6
CLUTCH HOUSING AND TRANSAXLE CASE COMPONENTS DISASSEMBLY J-8
PRIMARY SHAFT COMPONENTS PREINSPECTION J-12
PRIMARY SHAFT COMPONENTS DISASSEMBLY J-13
PRIMARY SHAFT COMPONENTS INSPECTION J-14
PRIMARY SHAFT COMPONENTS ASSEMBLY J-16
SECONDARY SHAFT COMPONENTS PREINSPECTION J-18
SECONDARY SHAFT COMPONENTS DISASSEMBLY J-20
SECONDARY SHAFT COMPONENTS INSPECTION J-21
SECONDARY SHAFT COMPONENTS ASSEMBLY J-24
DIFFERENTIAL PREINSPECTION J-27
DIFFERENTIAL DISASSEMBLY J-28
DIFFERENTIAL ASSEMBLY J-29
BEARING PRELOAD ADJUSTMENT J-30
CLUTCH HOUSING AND TRANSAXLE CASE COMPONENTS ASSEMBLY J-36
5TH/REVERSE GEAR AND HOUSING PARTS ASSEMBLY J-38

MANUAL TRANSAXLE

PRECAUTION

A6E511201029M01

1. Clean the transaxle exterior thoroughly using a steam cleaner or cleaning solvents before disassembly.

Warning
- **Using compressed air can cause dirt and other particles to fly out, causing injury to the eyes. Wear protective eye wear whenever using compressed air.**

Caution
- **Cleaning sealed bearings using cleaning fluids or a steam cleaner can wash the grease out of the bearing.**

2. Clean the removed parts using cleaning solvent, and dry them using compressed air.
3. Clean out all holes and passages using compressed air, and check that there are no obstructions.
4. Use a plastic hammer when disassembling the transaxle case and other light alloy metal parts.
5. Make sure each part is cleaned before assembling.
6. Coat all movable parts with the specified oil.
7. Replace parts whenever required.
8. Remove old sealant from contact surfaces before applying new sealant.
9. Assemble the parts within **10 minutes** after applying sealant. Allow all sealant to cure at least **30 minutes** after assembly before filling the transaxle with transaxle oil.

Warning
- **Although the stand has a self-locking brake system, there is a possibility that the brake may not hold when the transaxle is held in a lopsided position on the stand. This would cause the transaxle to turn suddenly, causing serious injury. Never keep the transaxle tilted to one side. Always hold the rotating handle firmly when turning the transaxle.**

5TH GEAR THRUST CLEARANCE PREINSPECTION

A6E511201029M02

1. Remove the rear cover.
2. Measure the 5th gear thrust clearance using a dial indicator.
   - If the clearance exceeds the maximum, check the contact surfaces of 5th gear and the clutch hub. Replace worn or damaged parts.

Clearance
0.100—0.220 mm {0.0040—0.0086 in}
Maximum
0.270 mm {0.0106 in}

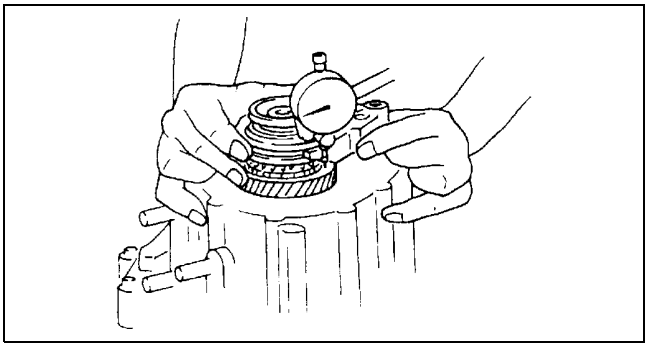

Z4F5112M001

5TH/REVERSE GEAR AND HOUSING PARTS DISASSEMBLY

A6E511201029M03

1. Disassemble in the order shown in the figure.

Caution

- **If any old sealant gets into the transaxle during installation of the transaxle case, trouble may occur in the transaxle. Remove any old sealant from the transaxle case and clutch housing, and with cleaning fluids.**

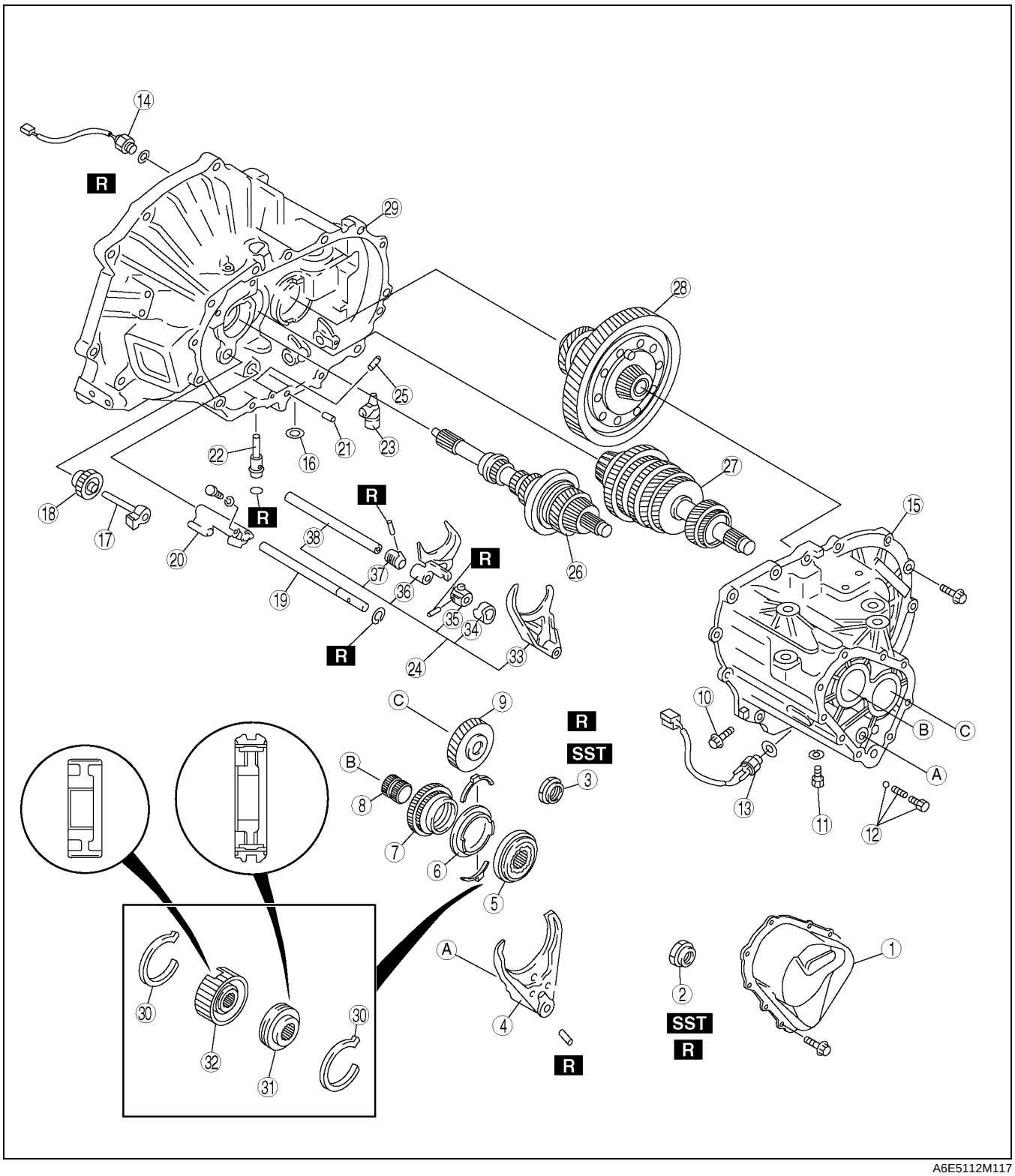

1	Rear cover
2	Locknut (primary shaft) (See J–5 Locknut Disassembly Note)
3	Locknut (secondary shaft) (See J–5 Locknut Disassembly Note)
4	5th/reverse shift fork
5	5th/reverse clutch hub component
6	5th synchronizer ring
7	5th gear

8	Gear sleeve
9	Secondary 5th gear
10	Lock bolt
11	Guide bolt
12	Lock bolt, ball, and spring
13	Back-up light switch
14	Neutral switch
15	Transaxle case component
16	Magnet

17	Reverse idler shaft
18	Reverse idler gear
19	5th/reverse shift rod
20	5th/reverse shift rod end
21	Pin
22	Crank lever shaft
23	Crank lever component
24	Shift fork and shift rod component (See J–5 Shift Fork and Shift Rod Component Disassembly Note)
25	Push pin
26	Primary shaft gear component
27	Secondary shaft gear component
28	Differential component
29	Clutch housing
30	Synchronizer key springs
31	Clutch hub sleeve
32	Clutch hub
33	3rd/4th shift fork
34	Interlock sleeve
35	Control lever
36	1st/2nd shift fork
37	Control end
38	Control rod

Locknut Disassembly Note

1. Assemble the **SST**.
2. Lift the transaxle and mount it on the **SST**.

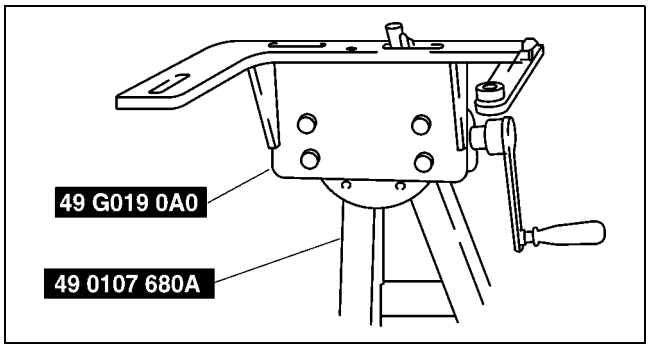

A6E5112M108

3. Lock the primary shaft with the **SST**.
4. Shift to 1st gear to lock the rotation of the primary shaft.
5. Bend back the caulking of locknuts using a chisel.
6. Remove the locknuts from the primary and secondary shafts.

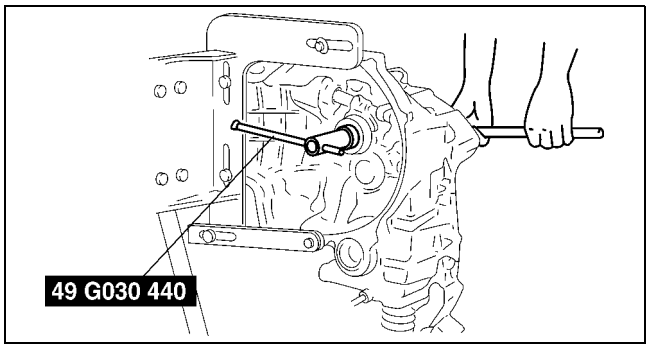

Z4F5112M004

Shift Fork and Shift Rod Component Disassembly Note

1. Aligh the ends of the interlock sleeve and of the control lever (arrow). Turn the shift rod counterclockwise.
2. While holding the 1st/2nd shift fork with one hand and the 3rd/4th shift fork with the other, raise them both at the same time and shift each of the clutch hub sleeves.

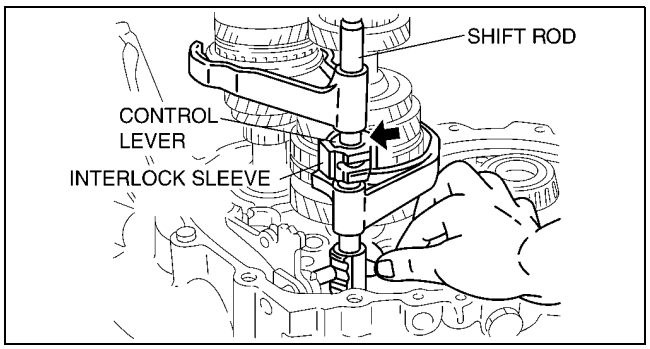

Z4F5112M005

3. Lift the control end and remove the steel, and at the same time, remove the control rod from the clutch housing.
4. Separate the shift rod and shift fork component from each of the clutch hub sleeves.

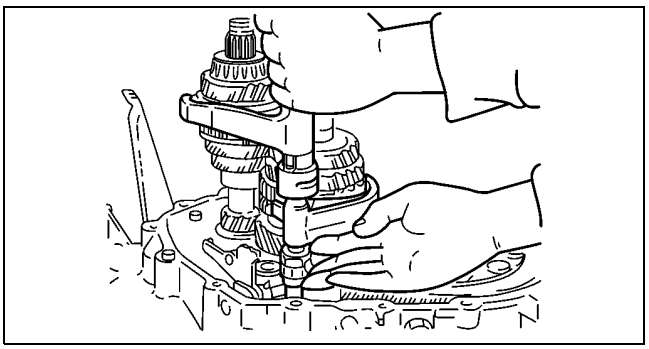

A6E5112M006

5TH/REVERSE GEAR AND HOUSING PARTS INSPECTION

A6E511201029M04

5th and Reverse Gear Inspection

1. Inspect the synchronizer cones for wear.
   - If there is malfunction, replace parts as necessary.
2. Inspect the gear teeth for damage, wear, and cracks.
   - If there is malfunction, replace parts as necessary.
3. Inspect the synchronizer ring matching teeth for damage and wear.
   - If there is malfunction, replace the synchronizer ring.

Synchronizer Ring Inspection

1. Inspect the synchronizer ring teeth for damage, wear, and cracks.
   - If there is malfunction, replace parts as necessary.
2. Inspect the tapered surface for wear and cracks.
   - If there is malfunction, replace parts as necessary.
3. Measure the clearance between the synchronizer ring and the flank surface of the gear.
   - If not as specified, replace the synchronizer ring.

   Note
   - Set the synchronizer ring squarely in the gear; then measure around the circumference.

   Standard clearance
   1.50 mm {0.059 in}
   Minimum
   0.80 mm {0.031 in}

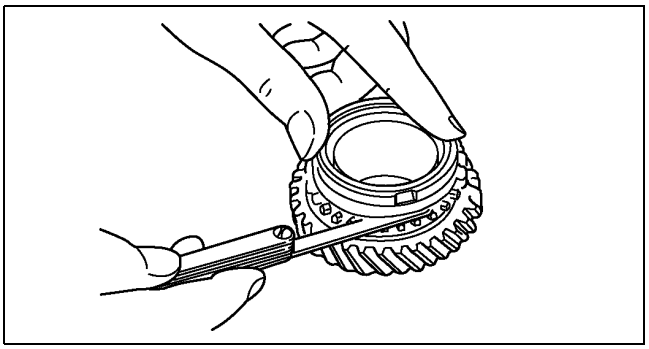

A6E5112M118

Clutch Hub Component Inspection

1. Inspect the clutch hub sleeve and hub operation.
   - If there is malfunction, replace parts as necessary.
2. Inspect the gear teeth for damage, wear, and cracks.
   - If there is malfunction, replace parts as necessary.
3. Inspect the synchronizer keys for damage, wear, and cracks.
   - If there is malfunction, replace parts as necessary.
4. Measure the clearance between the hub sleeve and shift fork.
   - If the clearance exceeds the maximum, replace the hub sleeve and shift fork as a set.

   Standard clearance
   0.10—0.36 mm {0.004—0.014 in}
   Maximum clearance
   0.86 mm {0.034 in}

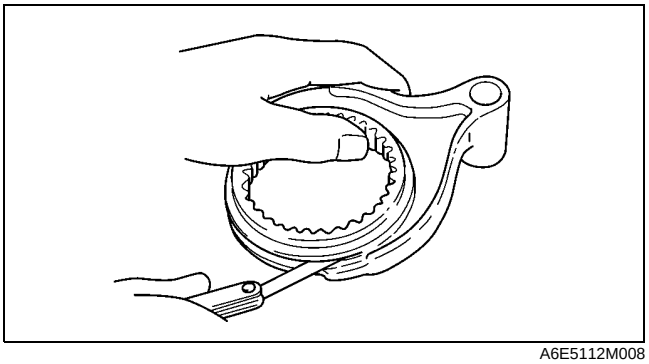

A6E5112M008

Reverse Idle Gear and Reverse Lever Inspection

1. Inspect the gear teeth for damage, wear, and cracks.
   - If there is malfunction, replace the reverse idle gear.
2. Measure the clearance between the reverse idle gear bushing and the reverse lever.
   - If not as specified, replace as necessary.

Standard clearance
0.10—0.35 mm {0.004—0.013 in}
Maximum Clearance
0.85 mm {0.033 in}

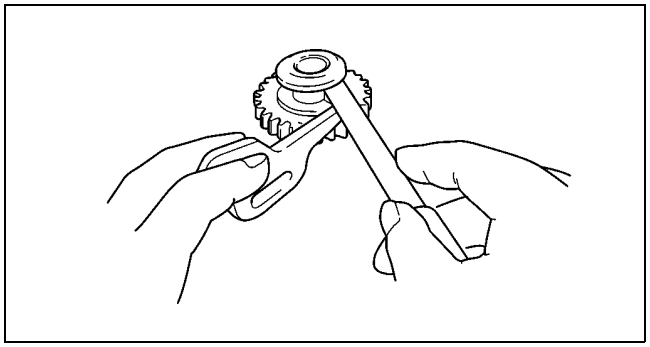

A6E5112M009

5th Gear and Sleeve Inspection

1. Measure the clearance between the 5th gear and the Sleeve.
   - If not as specified, replace parts as necessary.

5th gear inner diameter
34.000—34.025 mm {1.3386—1.3395 in}
Sleeve outer diameter
33.945—33.970 mm {1.3365—1.3373 in}
Clearance
0.030—0.080 mm {0.0012—0.0031 in}

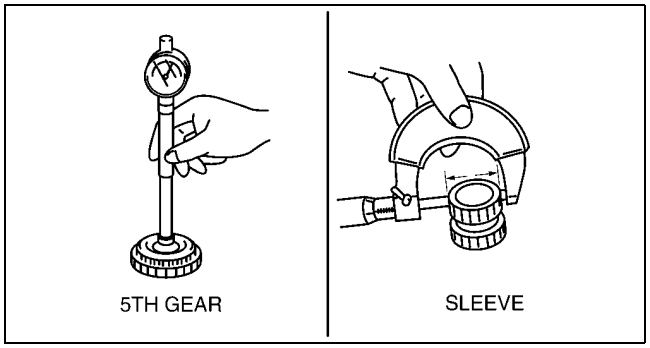

Z4F5112M010

CLUTCH HOUSING AND TRANSAXLE CASE COMPONENTS DISASSEMBLY

A6E511217010M01

1. Disassemble in the order shown in the figure.

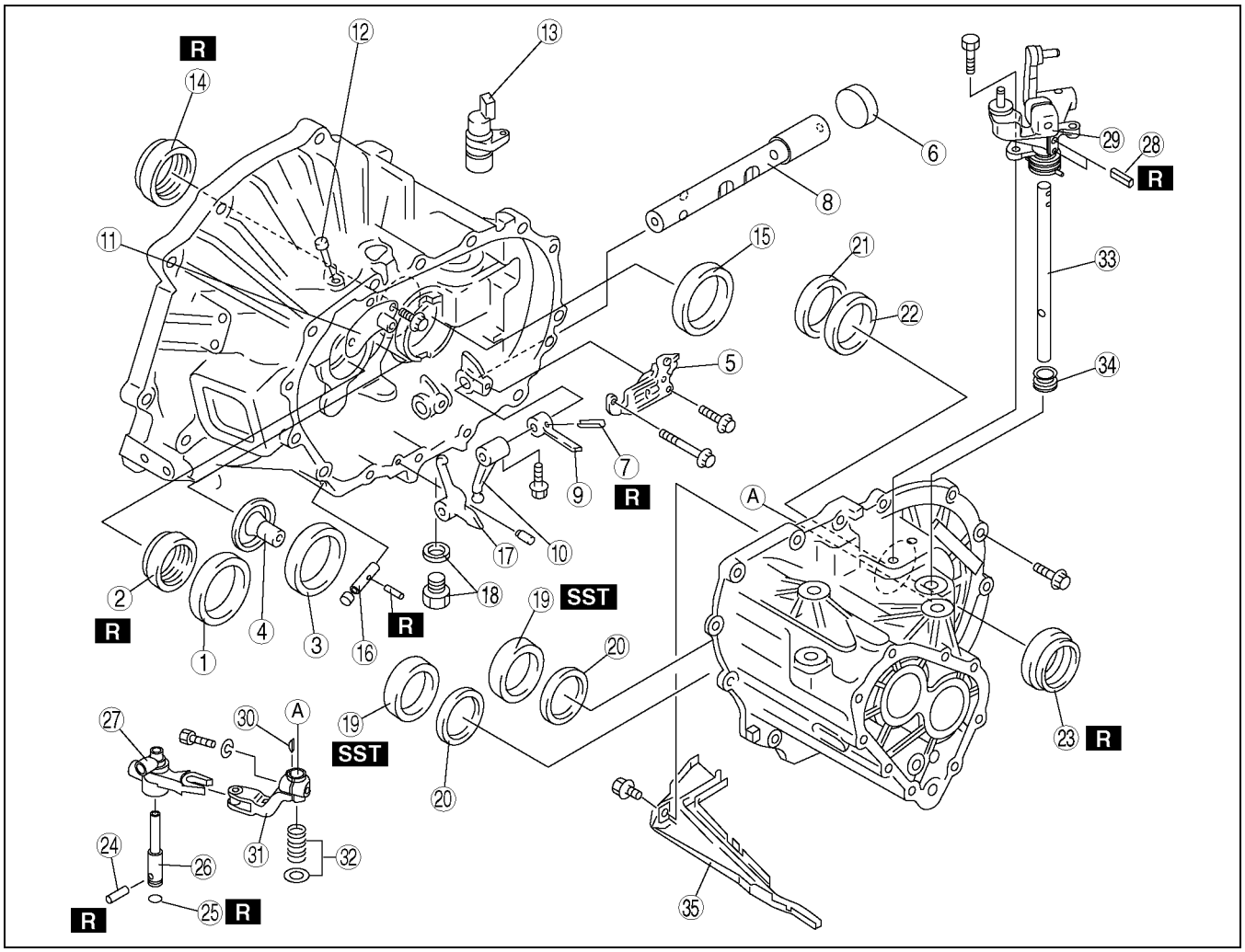

A6E5112M113

1	Bearing race (primary shaft)
2	Oil seal (primary shaft) (See J–9 Oil Seal (Primary Shaft) Disassembly Note)
3	Bearing race (secondary shaft) (See J–9 Bearing Race (Secondary Shaft) Disassembly Note)
4	Funnel
5	Guide plate component
6	Sealing cap
7	Roll pin (See J–9 Roll Pin Disassembly Note)
8	Control rod (See J–9 Control Rod Disassembly Note)
9	Selector
10	Change arm
11	Bleather cover component
12	Bleather
13	Hole cover
14	Oil seal (differential) (See J–10 Oil Seal (Differential) Disassembly Note)
15	Bearing race (differential) (See J–11 Bearing Race (Differential) Disassembly Note)

16	Reverse lever shaft
17	Reverse lever
18	Drain plug and washer
19	Bearing race (transaxle case) (See J–11 Bearing Race (Transaxle Case) Disassembly Note)
20	Adjustment shim(s)
21	Bearing race (differential) (See J–11 Bearing Race (Differential) Disassembly Note)
22	Adjustment shim(s)
23	Oil seal (differential) (See J–10 Oil Seal (Differential) Disassembly Note)
24	Dowel pin
25	O-ring
26	Crank lever shaft
27	Clank component lever
28	Roll pin
29	Shift lever component
30	Key
31	Control end
32	Spring and washer
33	shift lever shaft

34	Boots
35	Oil passage

Oil Seal (Primary Shaft) Disassembly Note

1. Remove the oil seal using screwdriver.

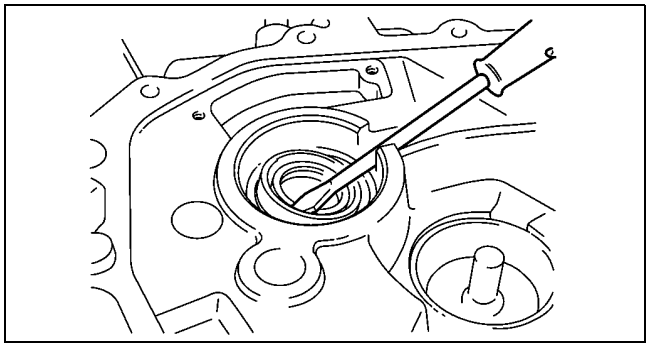

A6E5112M012

Bearing Race (Secondary Shaft) Disassembly Note

1. Remove the bearing race by lifting it and the funnel out together.

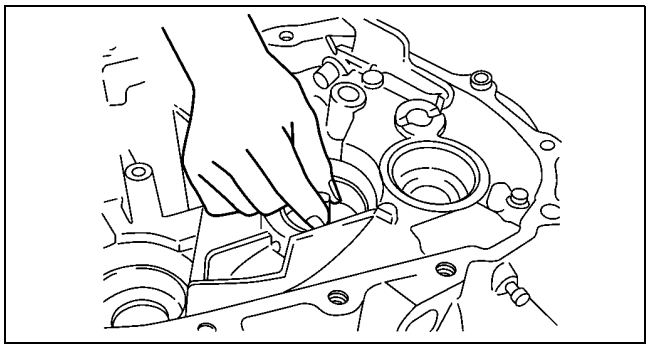

A6E5112M013

Roll Pin Disassembly Note

1. Align the groove for removal of the clutch housing pin with the position of the roll pin, then tap the pin out using a pin punch.

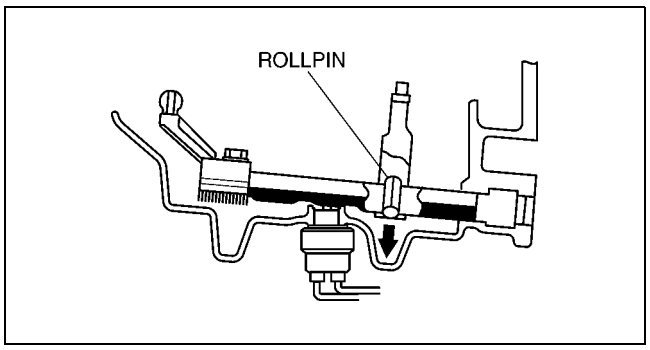

Z4F5112M014

Control Rod Disassembly Note

1. Move the control rod in the direction of arrow.

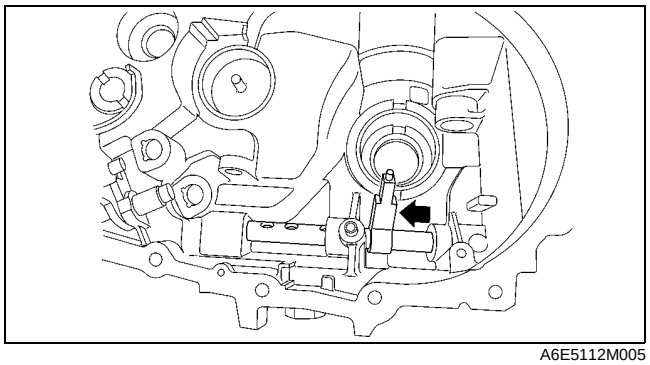

A6E5112M005

2. Using a flathead screwdriver and hammer, make a hole on the cap.

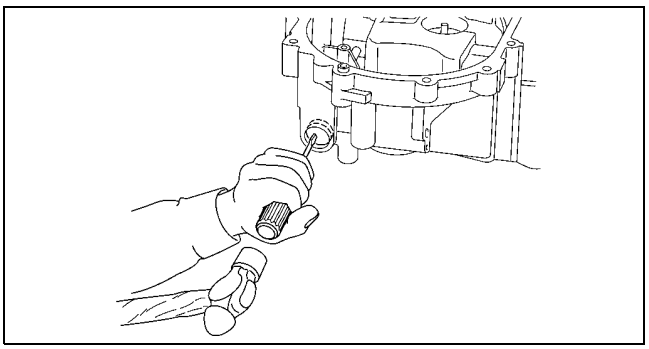

A6E5112M106

3. Pthe seal cap off, putting the flathead screwdriver into the hole, made in Step 2, from the inside of the transmission.

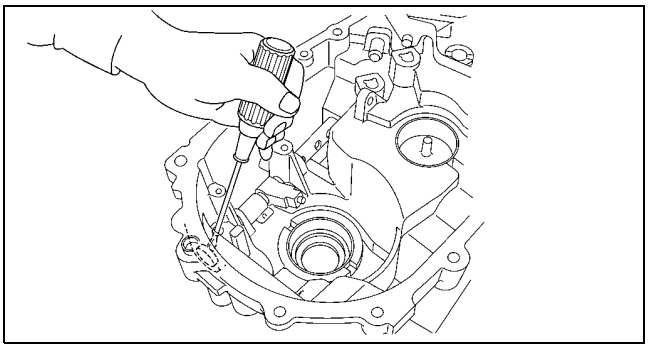

A6E5112M107

Oil Seal (Change Rod Component) Disassembly Note

1. Remove the oil seal using the screwdriver.

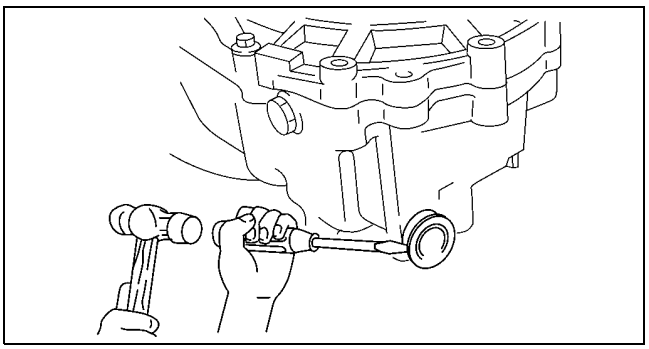

A6E5112M015

Oil Seal (Differential) Disassembly Note

1. Remove the oil seal using the screwdriver.

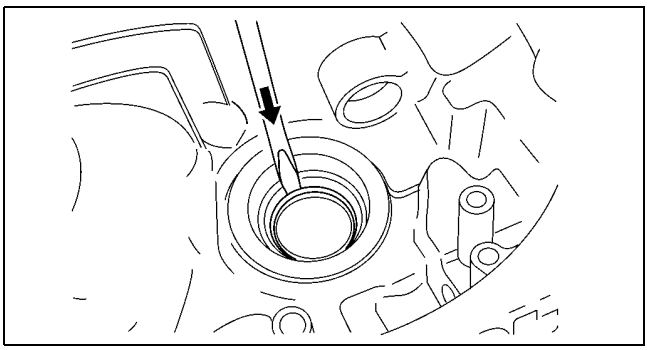

A6E5112M016

Bearing Race (Differential) Disassembly Note

1. Remove the bearing outer race using the **SST**.

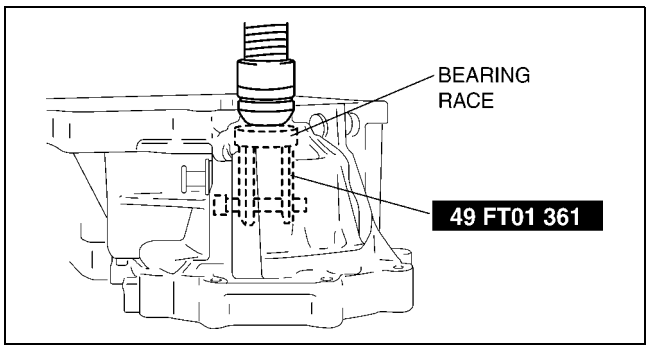

Z4F5112M017

Reverse Lever Shaft Disassembly Note

1. Remove the roll pin using pliers.

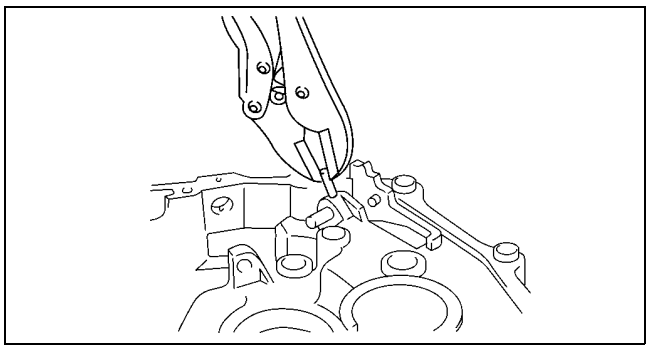

A6E5112M018

2. Protect the reverse lever shaft with a rag and use pliers to remove the shaft.

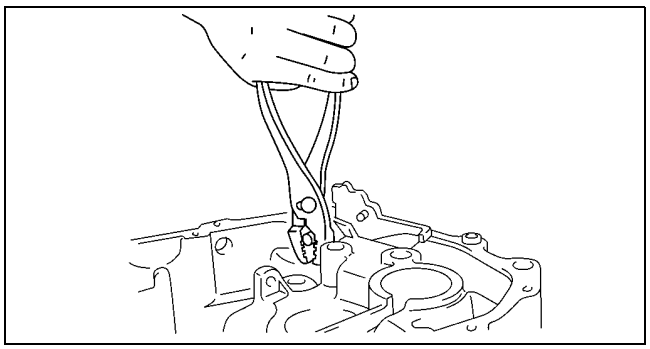

A6E5112M019

Bearing Race (Transaxle Case) Disassembly Note

1. Remove the bearing race using the **SST**.

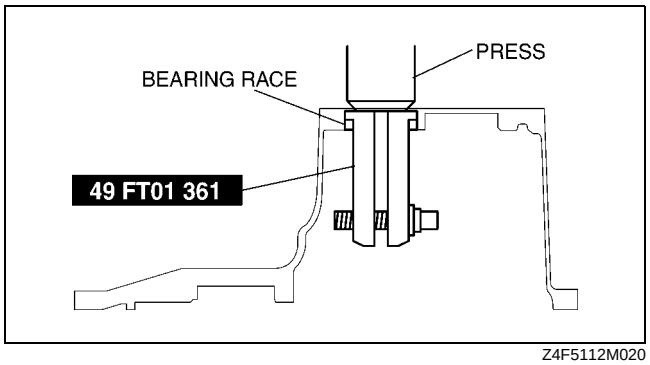

Z4F5112M020

PRIMARY SHAFT COMPONENTS PREINSPECTION

A6E511217201M01

3rd Gear Thrust Clearance

1. Measure the clearance between 3rd gear and 2nd gear.
   - If the clearance exceeds the maximum, check the contact surfaces of the 3rd gear, 2nd gear and 3rd/4th clutch hub. Replace worn and damaged parts.

Clearance
0.05—0.20 mm {0.002—0.007 in}
Maximum
0.25 mm {0.010 in}

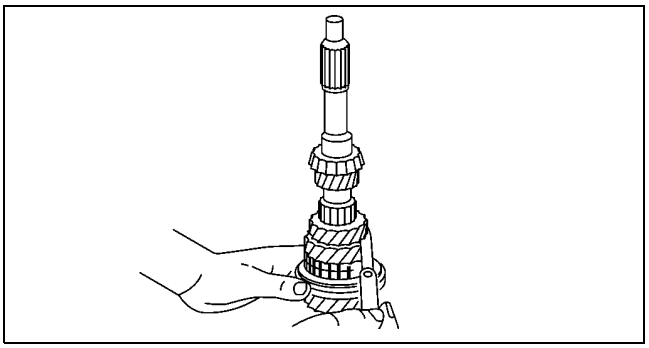

A6E5112M021

4th Gear Thrust Clearance

1. Measure the clearance between 4th gear and the bearing.
   - If the clearance exceeds the maximum, check the contact surfaces of the 4th gear, bearing, and 3rd/4th clutch hub. Replace worn and damaged parts.

Clearance
0.17—0.37 mm {0.007—0.014 in}
Maximum
0.42 mm {0.017 in}

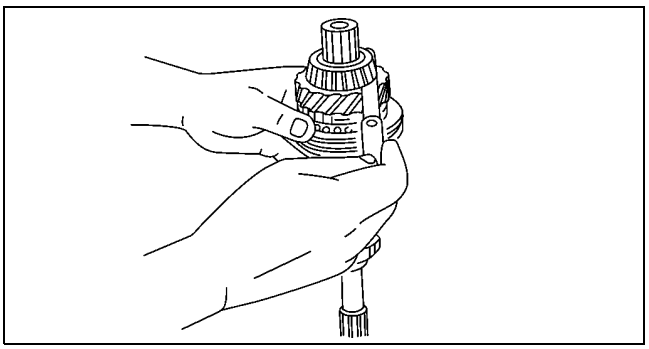

A6E5112M022

PRIMARY SHAFT COMPONENTS DISASSEMBLY

A6E511217201M02

1. Disassemble in the order shown in the figure.

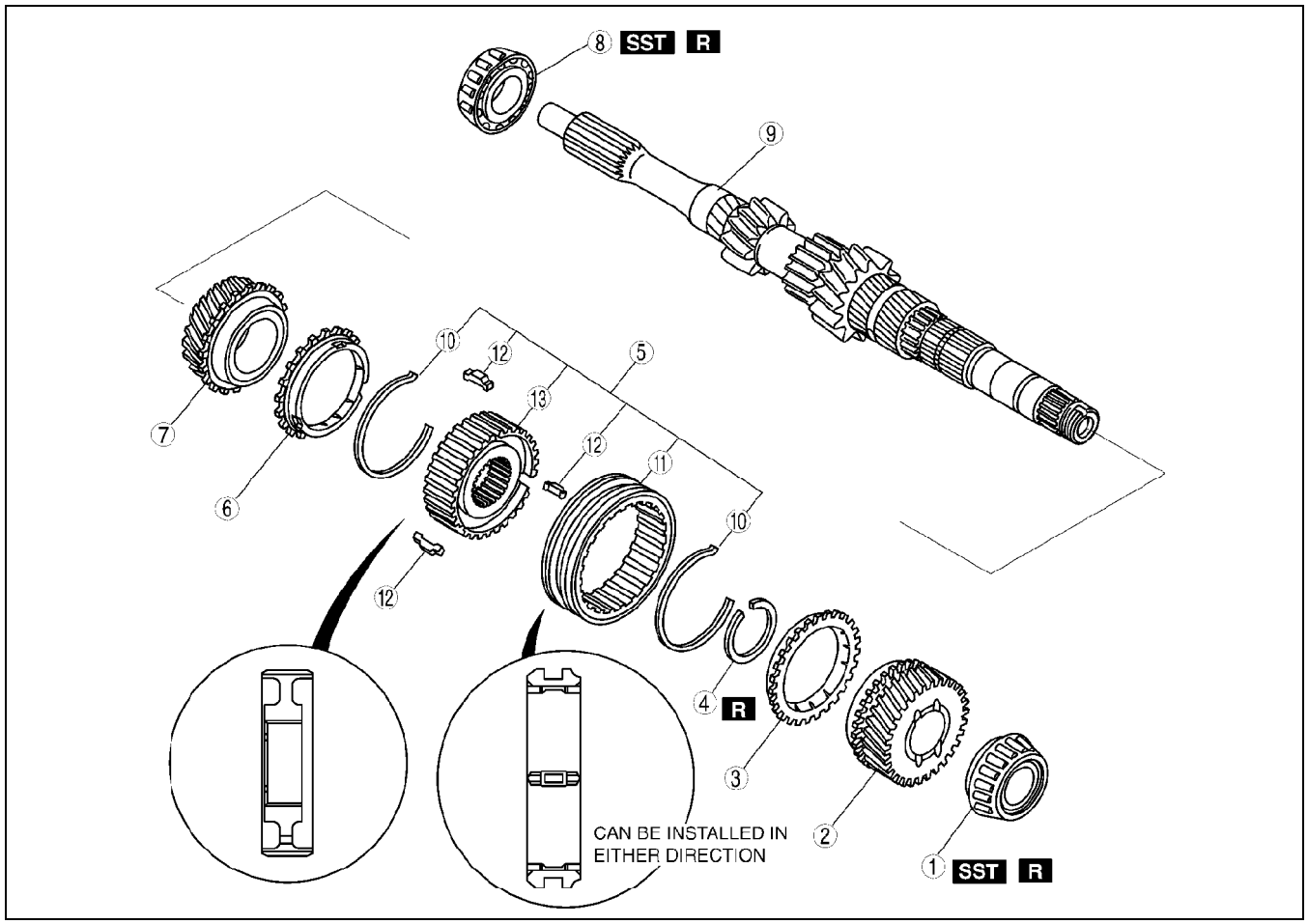

Z4F5112M023

1	Bearing (4th gear end) (See J–13 Bearing (4th Gear End) Disassembly Note)
2	4th gear
3	4th synchronizer ring
4	Retaining ring
5	3rd/4th clutch hub component (See J–14 3rd/4th Clutch Hub Component, 3rd Synchronizer Ring and 3rd Gear Disassembly Note)
6	3rd synchronizer ring (See J–14 3rd/4th Clutch Hub Component, 3rd Synchronizer Ring and 3rd Gear Disassembly Note)
7	3rd gear (See J–14 3rd/4th Clutch Hub Component, 3rd Synchronizer Ring and 3rd Gear Disassembly Note)
8	Bearing (primary shaft end) (See J–14 Bearing (Primary Shaft End) Disassembly Note)
9	Primary shaft gear
10	Synchronizer key springs
11	3rd/4th clutch hub sleeve
12	Synchronizer keys
13	3rd/4th clutch hub

Bearing (4th Gear End) Disassembly Note

1. Remove the bearing using the **SST**.

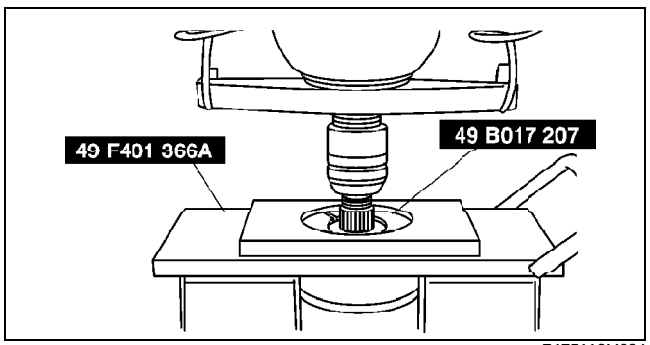

Z4F5112M024

3rd/4th Clutch Hub Component, 3rd Synchronizer Ring and 3rd Gear Disassembly Note

1. Remove the retaining ring.
2. Remove the 3rd/4th clutch hub component, 3rd synchronizer ring, and 3rd gear using the **SST**.

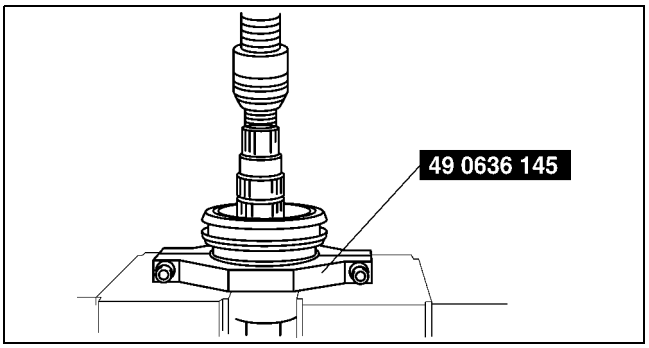

Z4F5112M025

Bearing (Primary Shaft End) Disassembly Note

1. Remove the bearing using the **SST**.

Caution
- **Use protective plates in the vise to prevent damage to the primary shaft gear.**

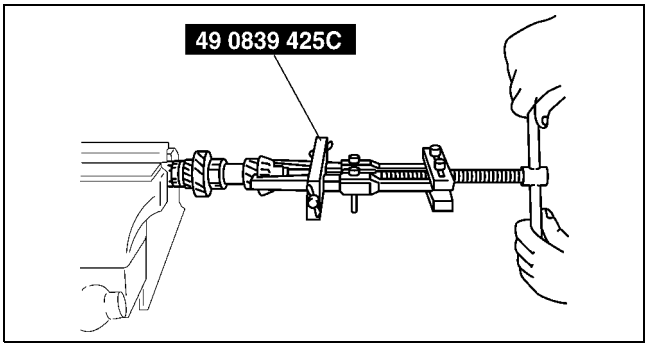

Z4F5112M026

PRIMARY SHAFT COMPONENTS INSPECTION

A6E511217201M03

4th Gear, 3rd Gear Inspection

1. Inspect the synchronizer cones for wear.
   - If there is malfunction, replace parts as necessary.
2. Inspect the gear teeth for damage, wear, and cracks.
   - If there is malfunction, replace parts as necessary.
3. Inspect the synchronizer ring matching teeth for damage and wear.
   - If there is malfunction, replace the synchronizer ring.

4th Synchronizer Ring, 3rd Synchronizer Ring Inspection

1. Inspect the synchronizer ring teeth for damage, wear, and cracks.
   - If there is malfunction, replace parts as necessary.
2. Inspect the tapered surface for wear and cracks.
   - If there is malfunction, replace parts as necessary.
3. Measure the clearance between the synchronizer ring and the flank surface of the gear.
   - If not as specified, replace the synchronizer ring.

Note
- Set the synchronizer ring squarely in the gear; then measure around the circumference.

Standard clearance
1.50 mm {0.059 in}
Minimum
0.80 mm {0.031 in}

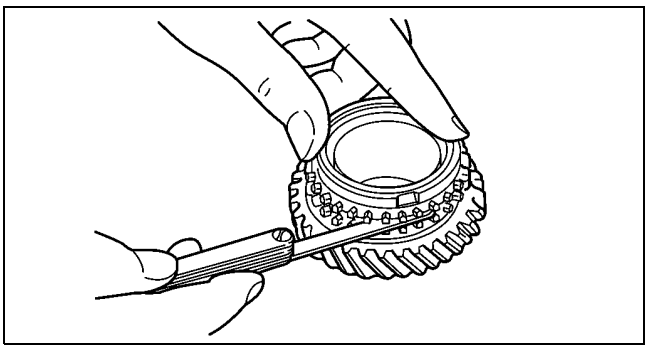

A6E5112M027

3rd/4th Clutch Hub Component Inspection

1. Inspect the clutch hub sleeve and hub operation.
   - If there is malfunction, replace parts as necessary.
2. Inspect the gear teeth for damage, wear, and cracks.
   - If there is malfunction, replace parts as necessary.
3. Inspect the synchronizer keys for damage, wear, and cracks.
   - If there is malfunction, replace parts as necessary.
4. Measure the clearance between the hub sleeve and shift forks.
   - If the clearance exceeds the maximum, replace the hub sleeve and shift fork as a set.

   Standard
   0.10—0.40 mm {0.004—0.015 in}
   Maximum
   0.90 mm {0.035 in}

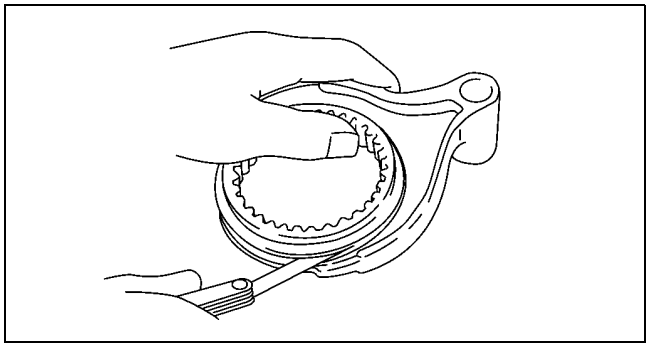

A6E5112M028

Primary Shaft Gear Inspection

1. Inspect the gear contact surface for damage and wear.
   - If there is malfunction, replace the primary shaft.
2. Inspect the splines for damage and wear.
   - If there is malfunction, replace the primary shaft.
3. Inspect the gear teeth for damage, wear, and cracks.
   - If there is malfunction, replace the primary shaft.
4. Inspect the oil passage for clogging.
   - If there is malfunction, replace the primary shaft.
5. Measure the shaft gear runout.
   - If not as specified, replace the primary shaft.

   Primary shaft runout
   0.050 mm {0.0020 in} max.

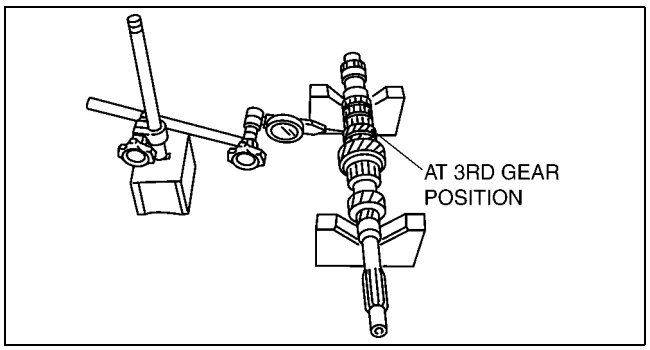

Z4F5112M029

6. Measure the clearance between the shaft gears and the gears.
   - If not as specified, replace parts as necessary.

Gear	Shaft (Outer dia.)	Gear (Inner dia.)	Clearance
3rd	35.945—35.970 {1.415—1.416}	36.000—36.025 {1.417—1.418}	0.030—0.080 {0.001—0.003}
4th	30.945—30.970 {1.218—1.219}	31.000—31.025 {1.220—1.221}	

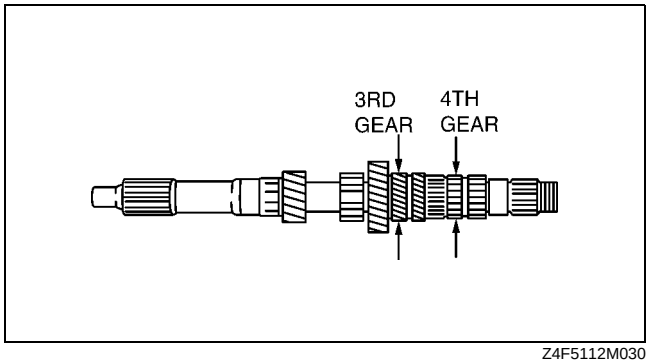

Z4F5112M030

PRIMARY SHAFT COMPONENTS ASSEMBLY

A6E511217201M04

1. Assemble in the order shown in the figure.

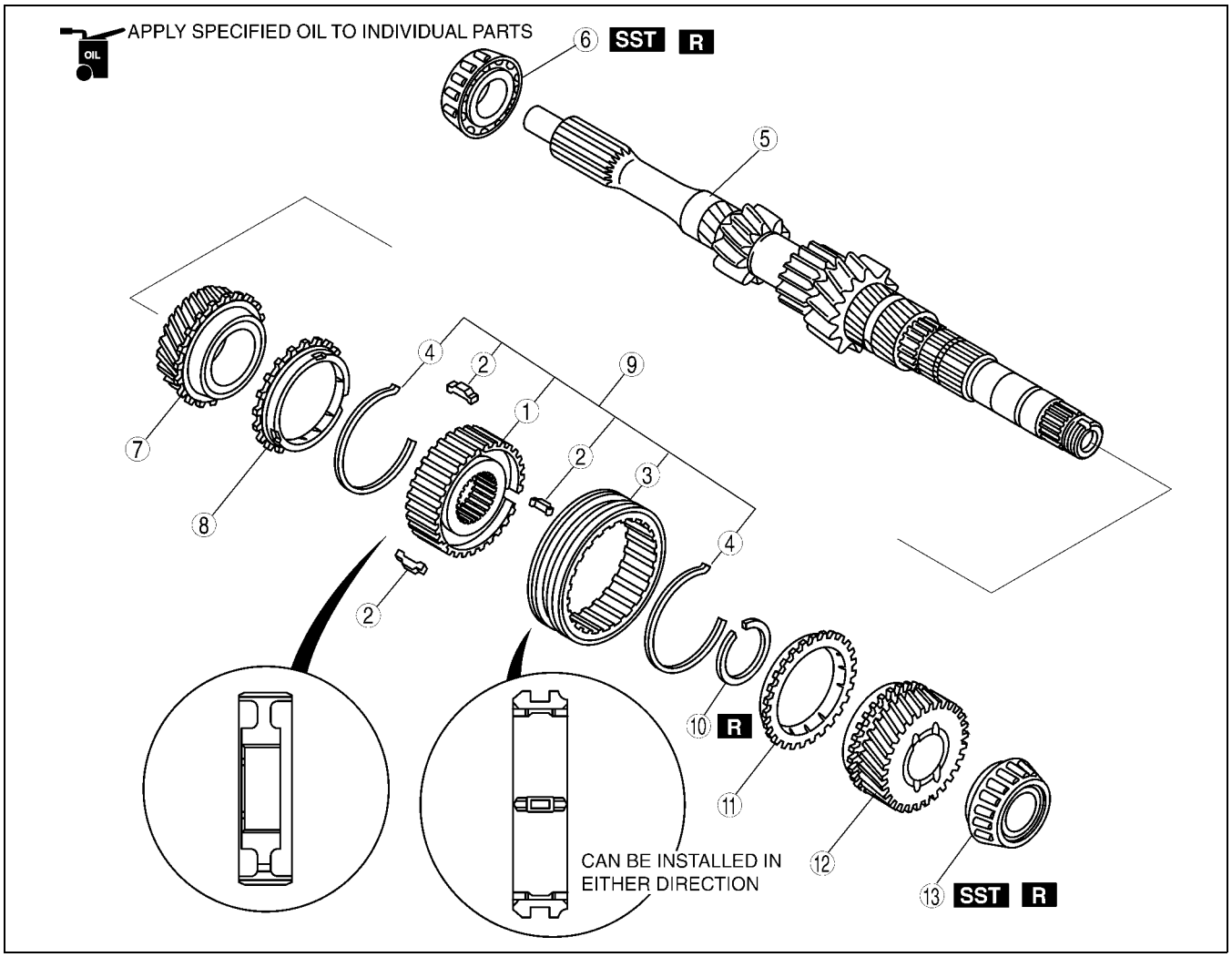

Z4F5112M031

1	3rd/4th clutch hub (See J–17 3rd/4th Clutch Hub Assembly Note)
2	Synchronizer keys
3	3rd/4th clutch hub sleeve
4	Synchronizer key springs
5	Primary shaft gear
6	Bearing (primary shaft end) (See J–17 Bearing (Primary Shaft End) Assembly Note)
7	3rd gear (See J–17 3rd Gear, 3rd Synchronizer Ring, and 3rd/4th Clutch Hub Component Assembly Note)
8	3rd synchronizer ring (See J–17 3rd Gear, 3rd Synchronizer Ring, and 3rd/4th Clutch Hub Component Assembly Note)

9	3rd/4th clutch hub component (See J–17 3rd Gear, 3rd Synchronizer Ring, and 3rd/4th Clutch Hub Component Assembly Note)
10	Retaining ring
11	4th synchronizer ring (See J–18 4th Synchronizer Ring, 4th Gear, and Bearing (4th Gear End) Assembly Note)
12	4th gear (See J–18 4th Synchronizer Ring, 4th Gear, and Bearing (4th Gear End) Assembly Note)
13	Bearing (4th gear end) (See J–18 4th Synchronizer Ring, 4th Gear, and Bearing (4th Gear End) Assembly Note)

3rd/4th Clutch Hub Assembly Note

1. Install the synchronizer key springs in the clutch hub with the hooks in the grooves to hold the three synchronizer key in place.

   Synchronizer key size
   A: 17.0 mm {0.669 in}
   B: 4.3 mm {0.17 in}
   C: 5.0 mm {0.20 in}

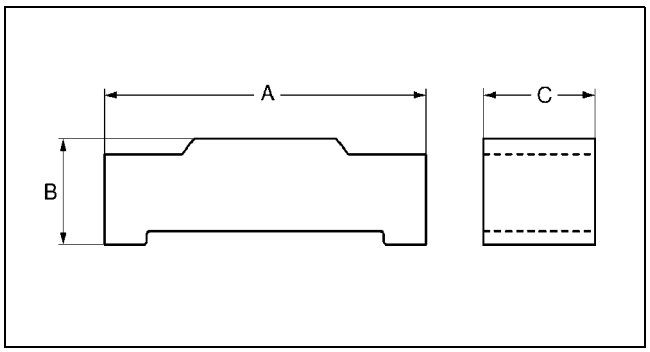

A6E5110M131

2. Align the synchronizer ring grooves with the synchronizer key during assembly.

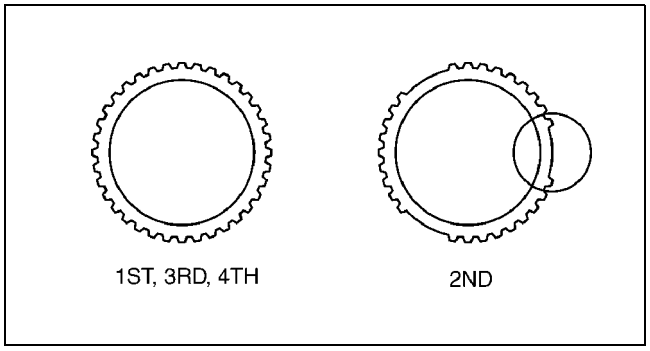

Z4F5112M032

Bearing (Primary Shaft End) Assembly Note

1. Install the new bearing using the **SST**.

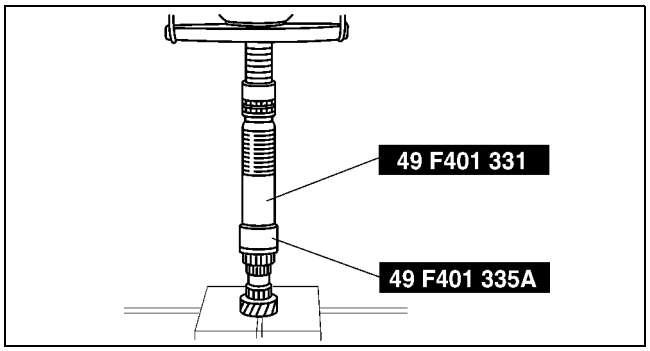

Z4F5112M033

3rd Gear, 3rd Synchronizer Ring, and 3rd/4th Clutch Hub Component Assembly Note

1. Install the 3rd gear, 3rd synchronizer ring, and 3rd/4th clutch hub component using a press.

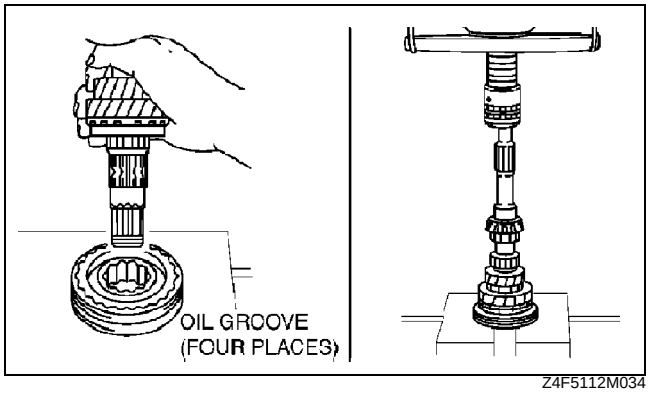

Z4F5112M034

4th Synchronizer Ring, 4th Gear, and Bearing (4th Gear End) Assembly Note

1. Install the 4th synchronizer ring, 4th gear, and a new bearing using the **SST**.

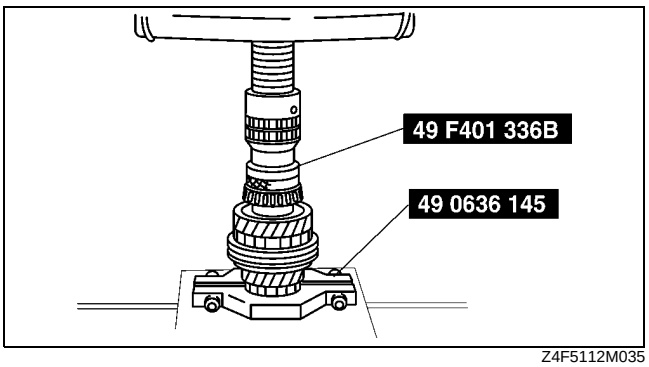

Z4F5112M035

2. Measure the clearance between the 3rd gear and 2nd gear.
   - If not as specified, reassemble the primary shaft component.

   Clearance
   0.05—0.20 mm {0.002—0.007 in}
   Maximum
   0.25 mm {0.010 in}

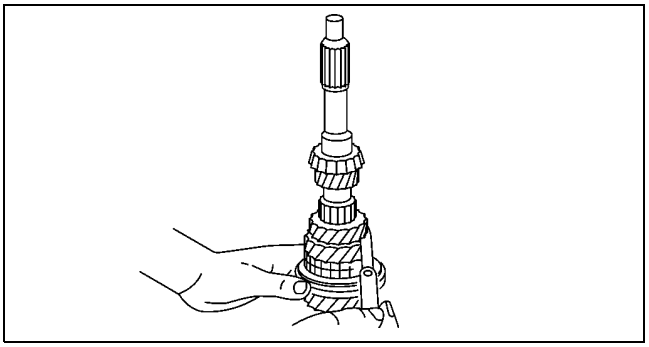
A6E5112M036

3. Measure the clearance between the 4th gear and bearing.
   - If not as specified, reassemble the primary shaft component.

   Clearance
   0.17—0.37 mm {0.007—0.014 in}
   Maximum
   0.42 mm {0.017 in}

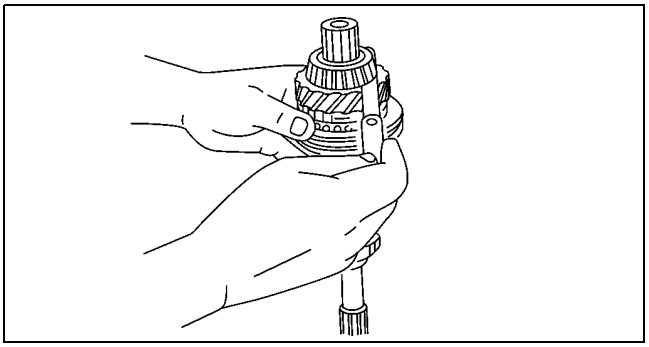
A6E5112M037

SECONDARY SHAFT COMPONENTS PREINSPECTION

A6E511217301M01

1st Gear Thrust Clearance Inspection

1. Measure the clearance between 1st gear and the differential drive gear.
   - If the clearance exceeds the maximum, check the contact surfaces of the 1st gear, differential drive gear of the secondary shaft gear, and 1st/2nd clutch hub component. Replace worn and damaged parts.

   Clearance
   0.05—0.28 mm {0.002—0.011 in}
   Maximum
   0.33 mm {0.013 in}

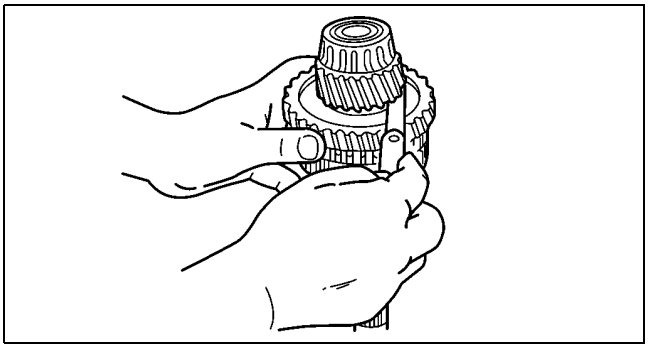
A6E5112M038

2nd Gear Thrust Clearance Inspection

1. Measure the clearance between 2nd gear and secondary 3rd gear.
   - If the clearance exceeds the maximum, check the contact surfaces of the 2nd gear, secondary 3rd gear, and 1st/2nd clutch hub component. Replace worn and damaged parts.

Clearance
0.18—0.46 mm {0.007—0.018 in}
Maximum
0.51 mm {0.020 in}

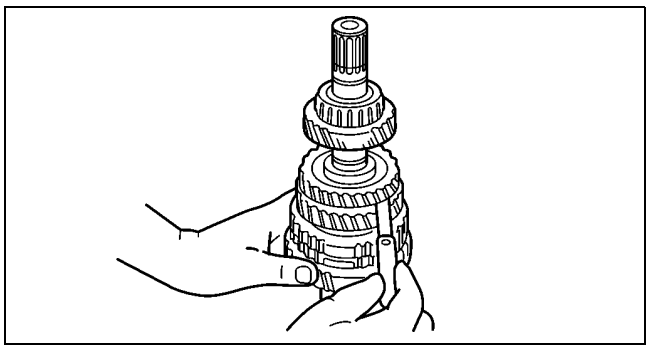

A6E5112M039

SECONDARY SHAFT COMPONENTS DISASSEMBLY

A6E511217301M02

1. Disassemble in the order shown in the figure.

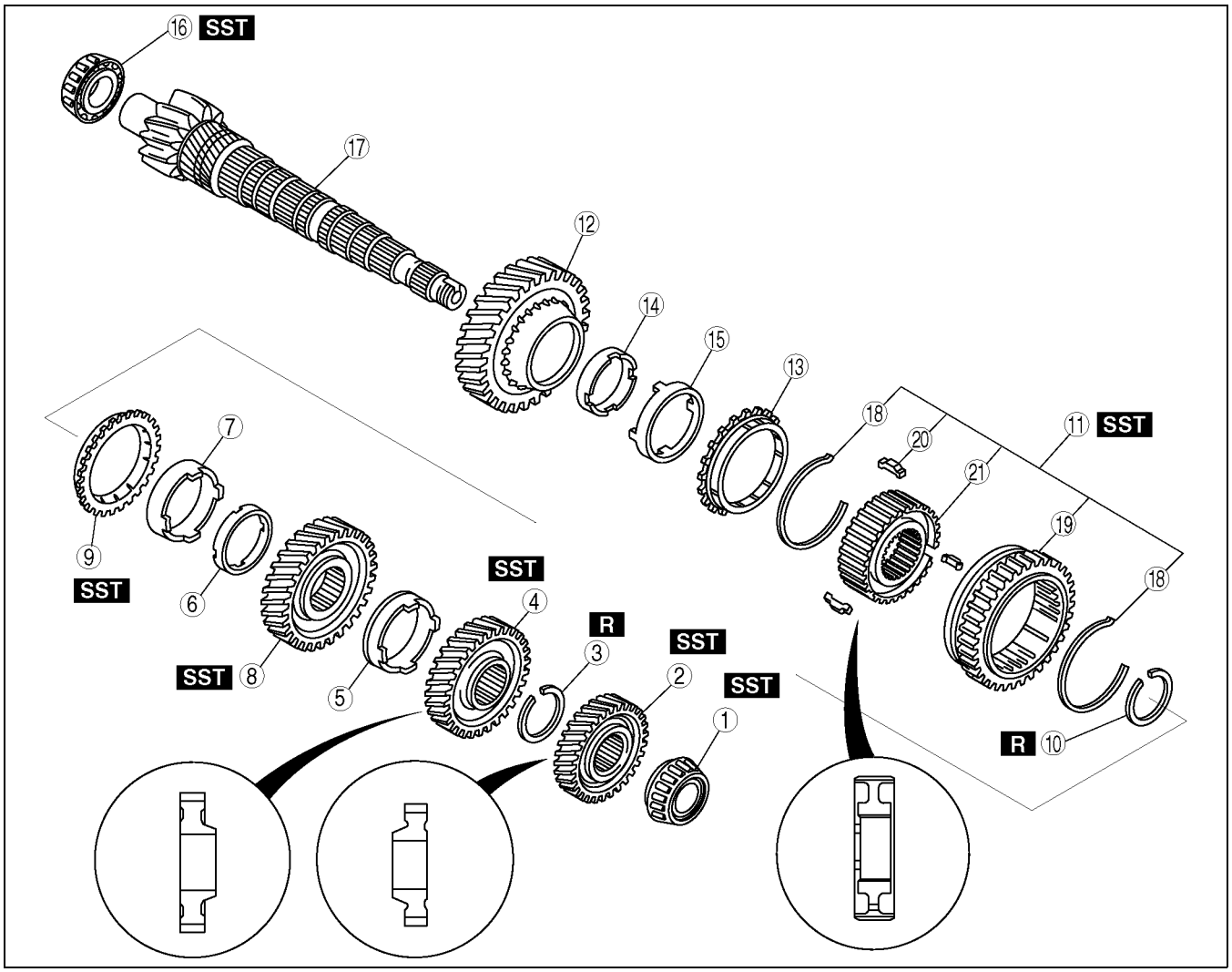

A6E5112M111

1	Bearing (See J–21 Bearing and Secondary 4th Gear Disassembly Note)
2	Secondary 4th gear
3	Retaining ring
4	Secondary 3rd gear (See J–21 Secondary 3rd Gear and 2nd Gear Disassembly Note)
5	Friction damper
6	Inner cone
7	Double cone
8	2nd gear
9	Synchronizer ring
10	Retaining ring

11	1st/2nd clutch hub component (See J–21 1st/2nd Clutch Hub Component, 1st Synchronizer Ring, and 1st Gear Disassembly Note)
12	1st gear
13	Synchronizer ring
14	Inner cone
15	Double cone
16	Bearing (See J–21 Bearing (Secondary Shaft End) Disassembly Note)
17	Secondary shaft gear
18	Synchronizer key springs
19	Clutch hub sleeve (reverse gear)
20	Synchronizer keys
21	1st/2nd clutch hub

Bearing and Secondary 4th Gear Disassembly Note

1. Remove the bearing and secondary 4th gear using the **SST**.

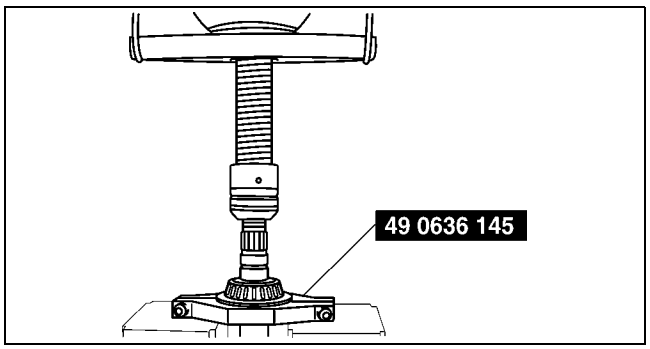

Z4F5112M041

Secondary 3rd Gear and 2nd Gear Disassembly Note

1. Remove the retaining ring.
2. Shift the gears to 1st gear.
3. Remove the secondary 3rd gear and 2nd gear using the **SST**.

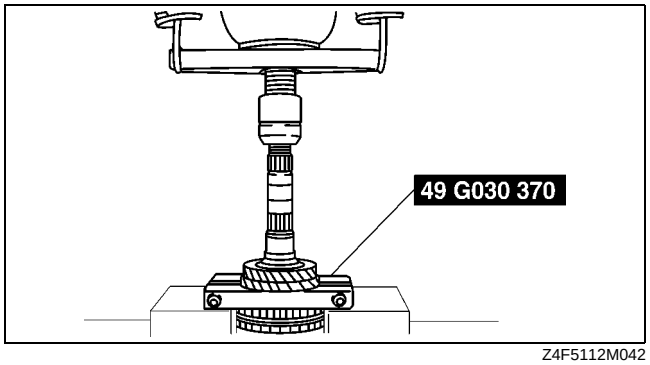

Z4F5112M042

1st/2nd Clutch Hub Component, 1st Synchronizer Ring, and 1st Gear Disassembly Note

1. Remove the retaining ring.
2. Remove the 1st/2nd clutch hub component, 1st synchronizer ring, and 1st gear using a press.

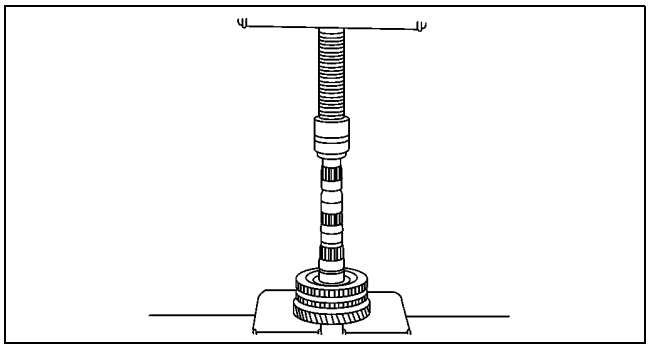

A6E5112M043

Bearing (Secondary Shaft End) Disassembly Note

1. Remove the bearing using the **SST**.

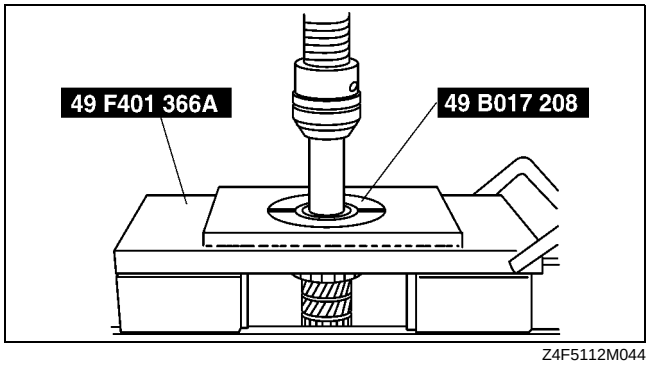

Z4F5112M044

SECONDARY SHAFT COMPONENTS INSPECTION

A6E511217301M03

Gears Inspection

1. Inspect the synchronizer cones for wear.
   - If there is malfunction, replace parts as necessary.
2. Inspect the gear teeth for damage, wear, and cracks.
   - If there is malfunction, replace parts as necessary.
3. Inspect the synchronizer ring matching teeth for damage and wear.
   - If there is malfunction, replace the synchronizer ring.

Synchronizer Ring Inspection

1. Inspect the synchronizer ring teeth for damage, wear, and cracks.
   - If there is malfunction, replace parts as necessary.
2. Inspect the tapered surface for wear and cracks.
   - If there is malfunction, replace parts as necessary.
3. Measure the clearance between the synchronizer ring and the side of gear circumferentially using a feeler gauge.
   - If the clearance is exceed the minimum, replace the synchronizer ring.

   Standard clearance
   1.50 mm {0.059 in}
   Minimum
   0.80 mm {0.031 in}

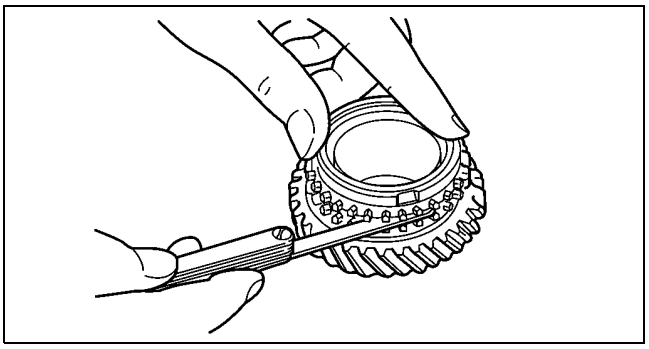

A6E5112M047

Clutch Hub Component Inspection

1. Inspect the clutch hub sleeve and hub operation.
   - If there is malfunction, replace parts as necessary.
2. Inspect the gear teeth for damage, wear, and cracks.
   - If there is malfunction, replace parts as necessary.
3. Inspect the synchronizer keys for damage, wear, and cracks.
   - If there is malfunction, replace parts as necessary.
4. Measure the clearance between the hub sleeve and shift fork.
   - If the clearance exceeds the maximum, replace the hub sleeve and shift fork as a set.

   Standard clearance
   0.10—0.45 mm {0.004—0.017 in}
   Maximum clearance
   0.95 mm {0.037 in}

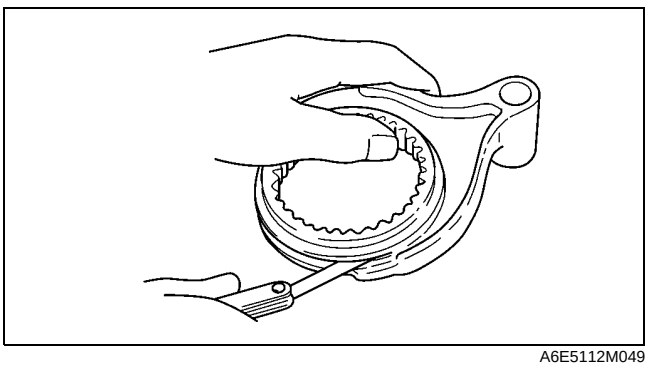

A6E5112M049

Secondary Shaft Gear Inspection

1. Inspect the gear contact surface for damage and wear.
   - If there is malfunction, replace the secondary shaft.
2. Inspect the splines for damage and wear.
   - If there is malfunction, replace the secondary shaft.
3. Inspect the gear teeth for damage, wear, and cracks.
   - If there is malfunction, replace the secondary shaft.
4. Inspect the oil passage for clogging.
   - If there is malfunction, replace the secondary shaft.

5. Measure the shaft gear runout.
   - If not as specified, replace the secondary shaft.

   Secondary shaft gear runout
   0.015 mm {0.0006 in} max.

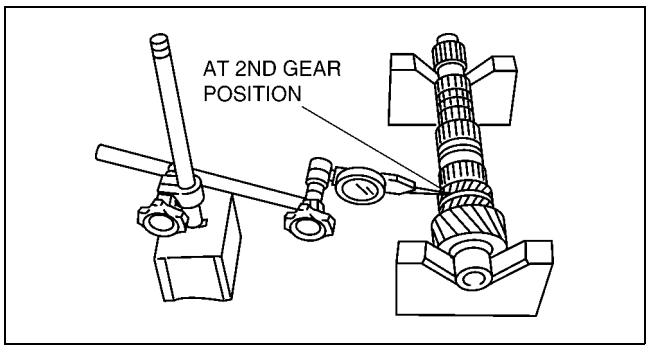

A6E5112M050

6. Measure the clearance between the shaft gears and the gears.
   - If not as specified, replace parts as necessary.

mm{in}

Gear	Shaft (outer dia.)	Gear (inner dia.)	Clearance
1st	39.445—39.470 {1.553—1.554}	39.500—39.525 {1.555—1.556}	0.030—0.080 {0.002—0.003}
2nd	34.945—34.905 {1.376—1.374}	35.015—35.035 {1.378—1.379}	0.05—0.09 {0.002—0.003}

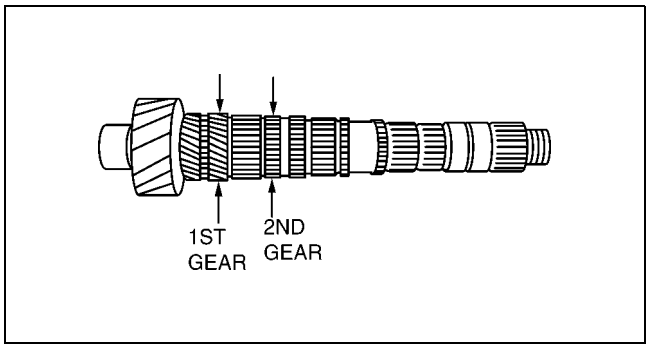

Z4F5112M102

SECONDARY SHAFT COMPONENTS ASSEMBLY

A6E511217301M04

1. Assemble in the order shown in the figure.

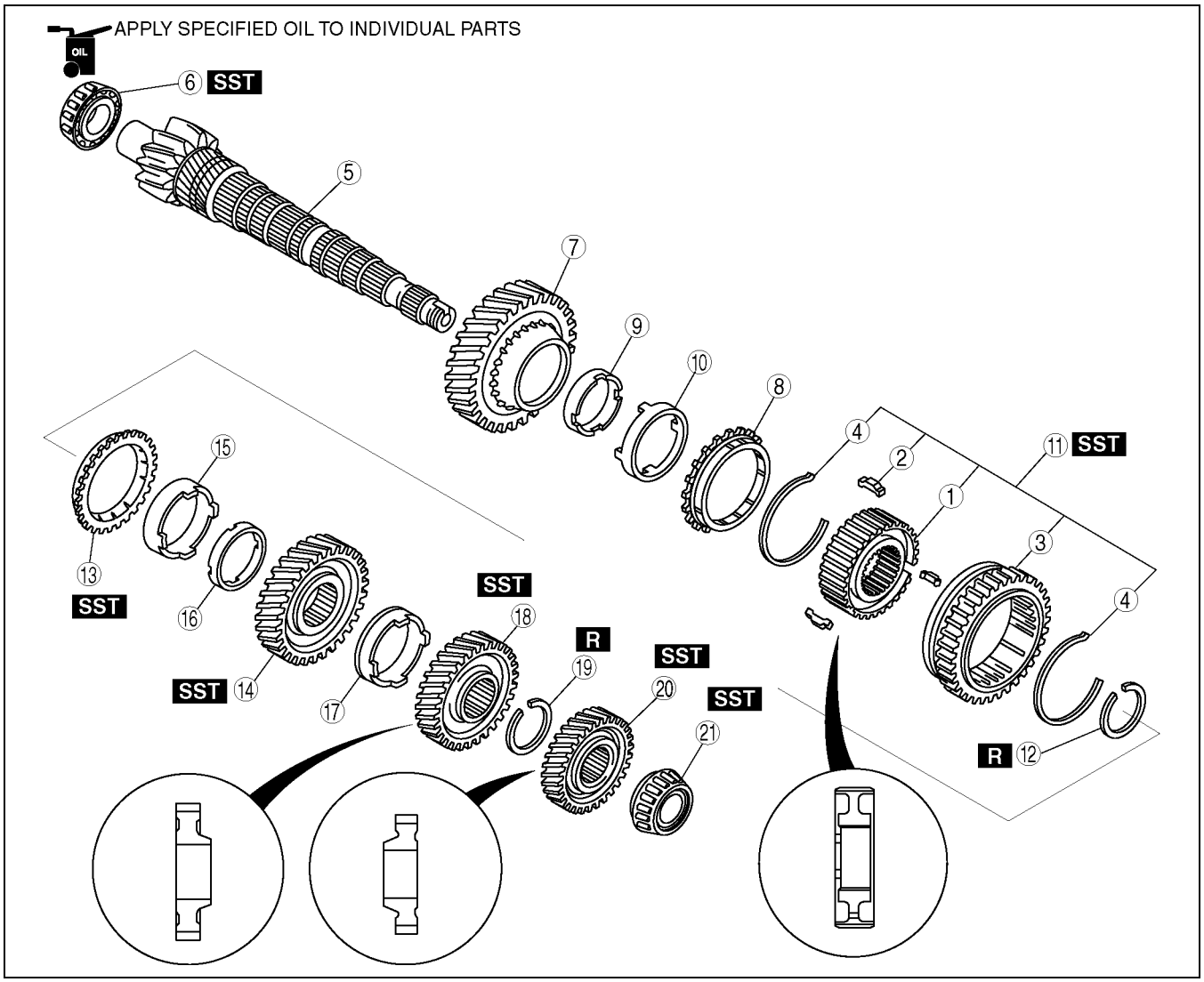

A6E5112M110

1	1st/2nd clutch hub (See J–25 1st/2nd Clutch Hub Assembly Note)
2	Synchronizer keys
3	Clutch hub sleeve (reverse gear)
4	Synchronizer key spring
5	Secondary shaft gear
6	Bearing (secondary shaft end) (See J–25 Bearing (Secondary Shaft End) Assembly Note)
7	1st gear (See J–25 1st Gear, 1st Synchronizer Ring, and 1st/2nd Clutch Hub Component Assembly Note)
8	Synchronizer ring
9	Inner cone

10	Double cone
11	1st/2nd clutch hub component
12	Retaining ring
13	Synchronizer ring
14	2nd gear
15	Double cone
16	Inner cone
17	Friction damper
18	Secondary 3rd gear
19	Retaining ring
20	Secondary 4th gear (See J–26 Secondary 4th Gear and Bearing Assembly Note)
21	Bearing

1st/2nd Clutch Hub Assembly Note

1. Install the synchronizer key springs in the clutch hub with the hooks in the grooves to hold the three synchronizer keys in place.

Synchronizer key
A: 19.0 mm {0.748 in}
B: 4.3 mm {0.17 in}
C: 5.0 mm {0.20 in}

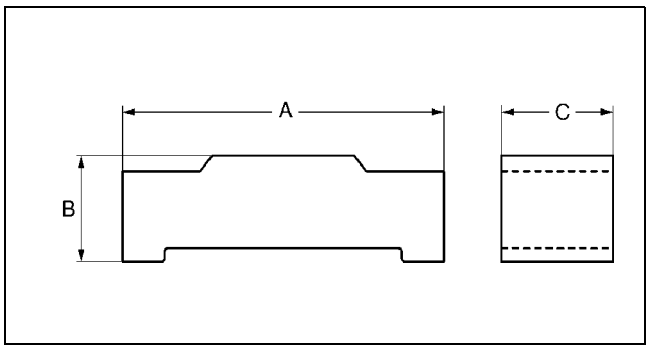

A6E5110M131

Bearing (Secondary Shaft End) Assembly Note

1. Install the new bearing using the **SST**.

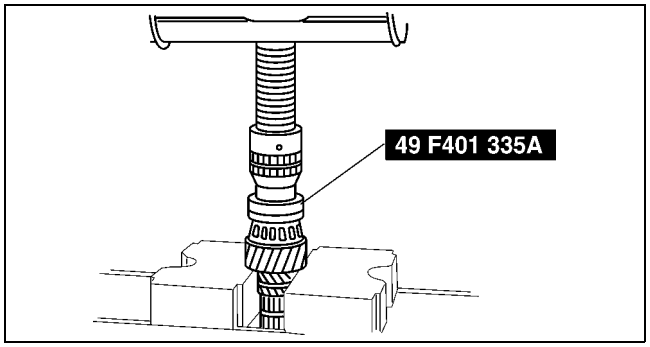

Z4F5112M052

1st Gear, 1st Synchronizer Ring, and 1st/2nd Clutch Hub Component Assembly Note

Note
- The size of the 1st, 2nd, 3rd, and 4th synchronizer rings are the same.

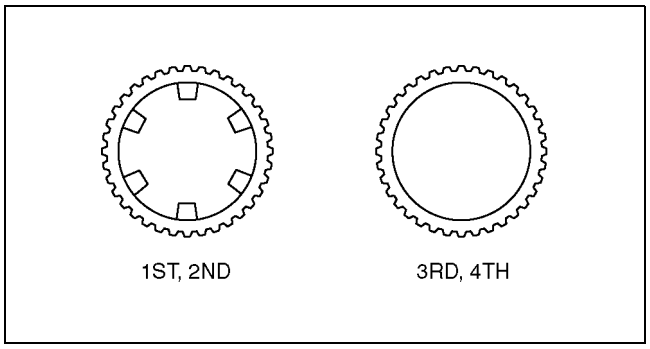

A6E5112M114

1. Assemble the 1st gear, 1st synchronizer ring, and 1st/2nd clutch hub component, as shown in the figure.

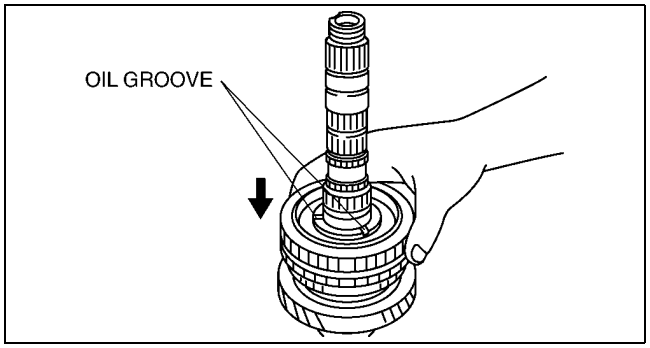

Z4F5112M054

2. Press the 1st/2nd clutch hub component on using the **SST**.

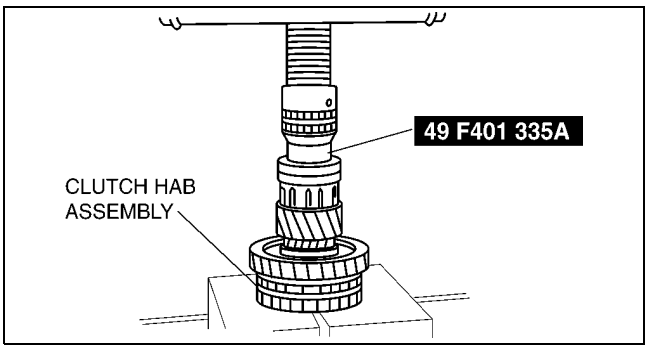

Z4F5112M055

2nd Synchronizer Ring, 2nd Gear, and Secondary 3rd Gear Assembly Note

1. Install the 2nd synchronizer ring and 2nd gear.
2. Install the secondary 3rd gear using the **SST**.

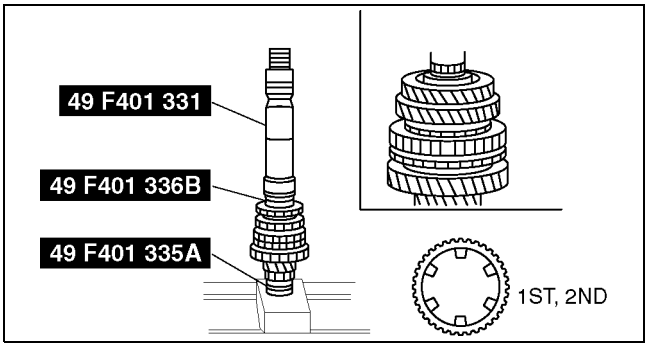

A6E5112M115

Secondary 4th Gear and Bearing Assembly Note

1. Install the secondary 4th gear and the bearing using the **SST**.

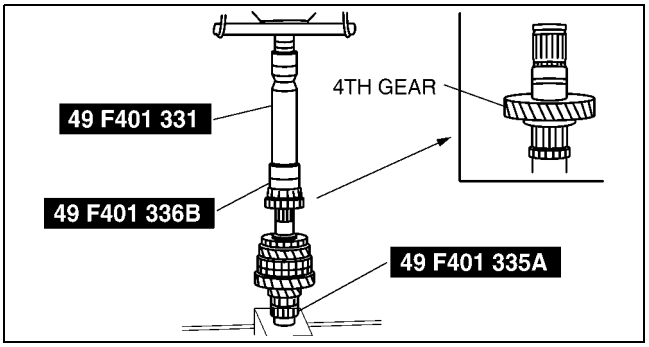

Z4F5112M057

2. Measure the clearance between the 1st gear and the differential drive gear.

   Clearance
   0.05—0.28 mm {0.002—0.011 in}
   Maximum
   0.33 mm {0.013 in}

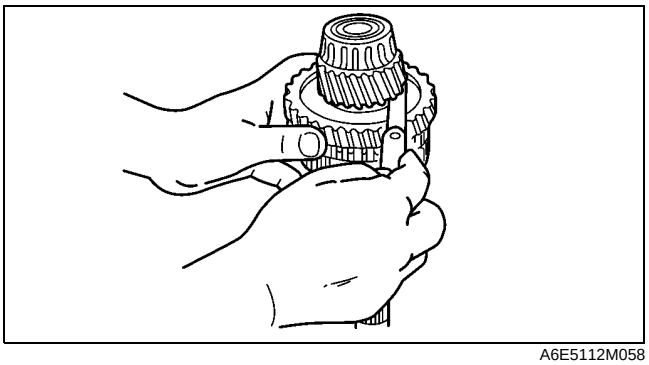
A6E5112M058

3. Measure the clearance between the 2nd gear and the secondary 3rd gear.
   - If not as specified, reassemble the secondary shaft component.

Clearance
0.18—0.46 mm {0.007—0.018 in}
Maximum
0.51 mm {0.020 in}

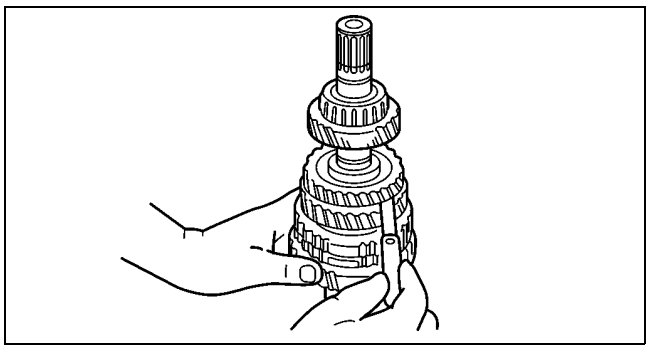

A6E5112M059

DIFFERENTIAL PREINSPECTION

A6E511227100M01

Backlash Inspection

1. Measure the backlash of the side gear.
   - If not as specified, replace parts as necessary.

Standard
0.050—0.150 mm{0.0020—0.059 in}

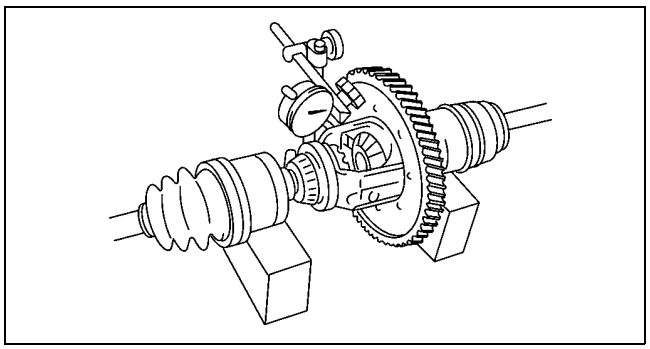

A6E5112M060

DIFFERENTIAL DISASSEMBLY

A6E511227100M02

1. Disassemble in the order shown in the figure.

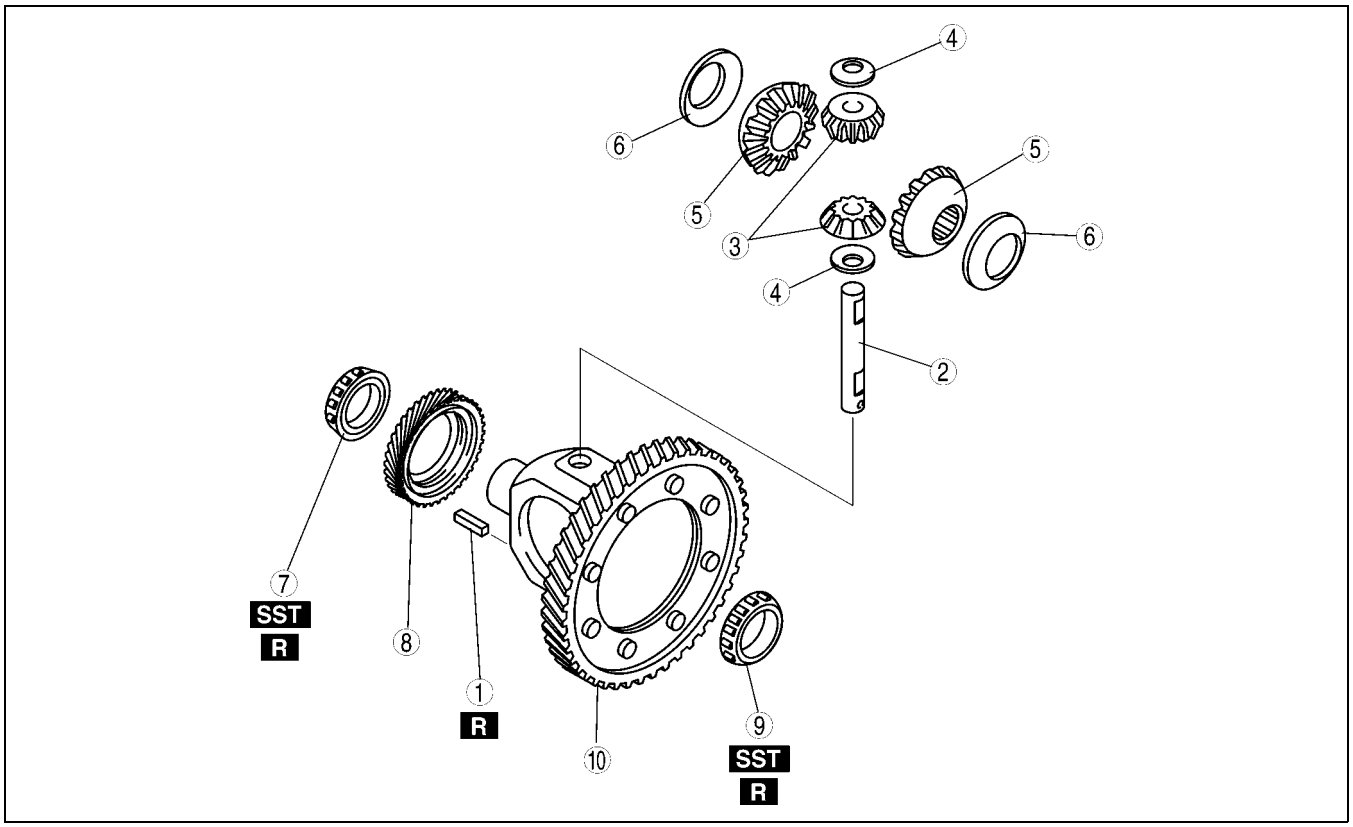

Z4F5112M061

1	Roll pin
2	Pinion shaft
3	Pinion gear
4	Thrust washer
5	Side gear
6	Thrust washer

7	Bearing (side opposite ring gear) (See J–28 Bearing (Side Opposite Ring Gear) Disassembly Note)
8	Speedometer drive gear
9	Bearing (ring gear side) (See J–29 Bearing (Ring Gear Side) Disassembly Note)
10	Ring gear and gear case component

Bearing (Side Opposite Ring Gear) Disassembly Note

1. Remove the bearing using the **SSTs**.

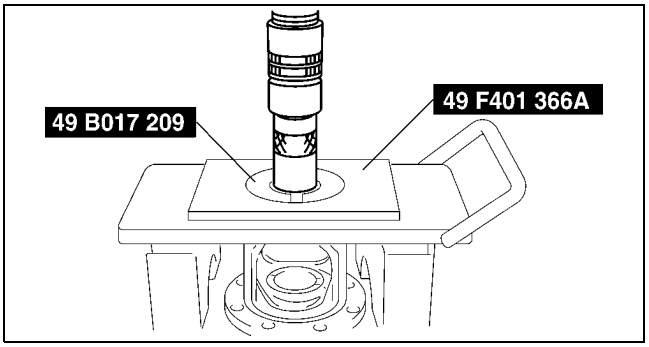

Z4F5112M062

Bearing (Ring Gear Side) Disassembly Note

1. Remove the bearing using the **SST**.

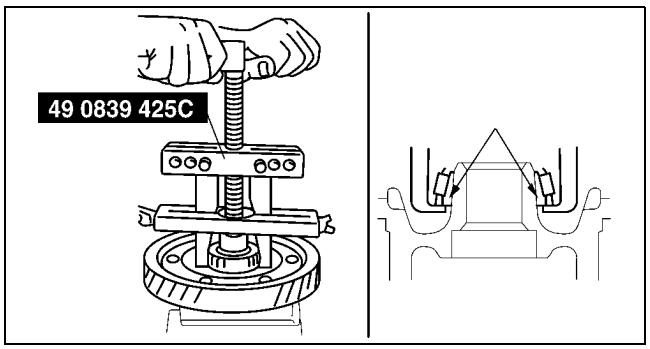

Z4F5112M063

DIFFERENTIAL ASSEMBLY

A6E511227100M03

1. Assemble in the order shown in the figure.

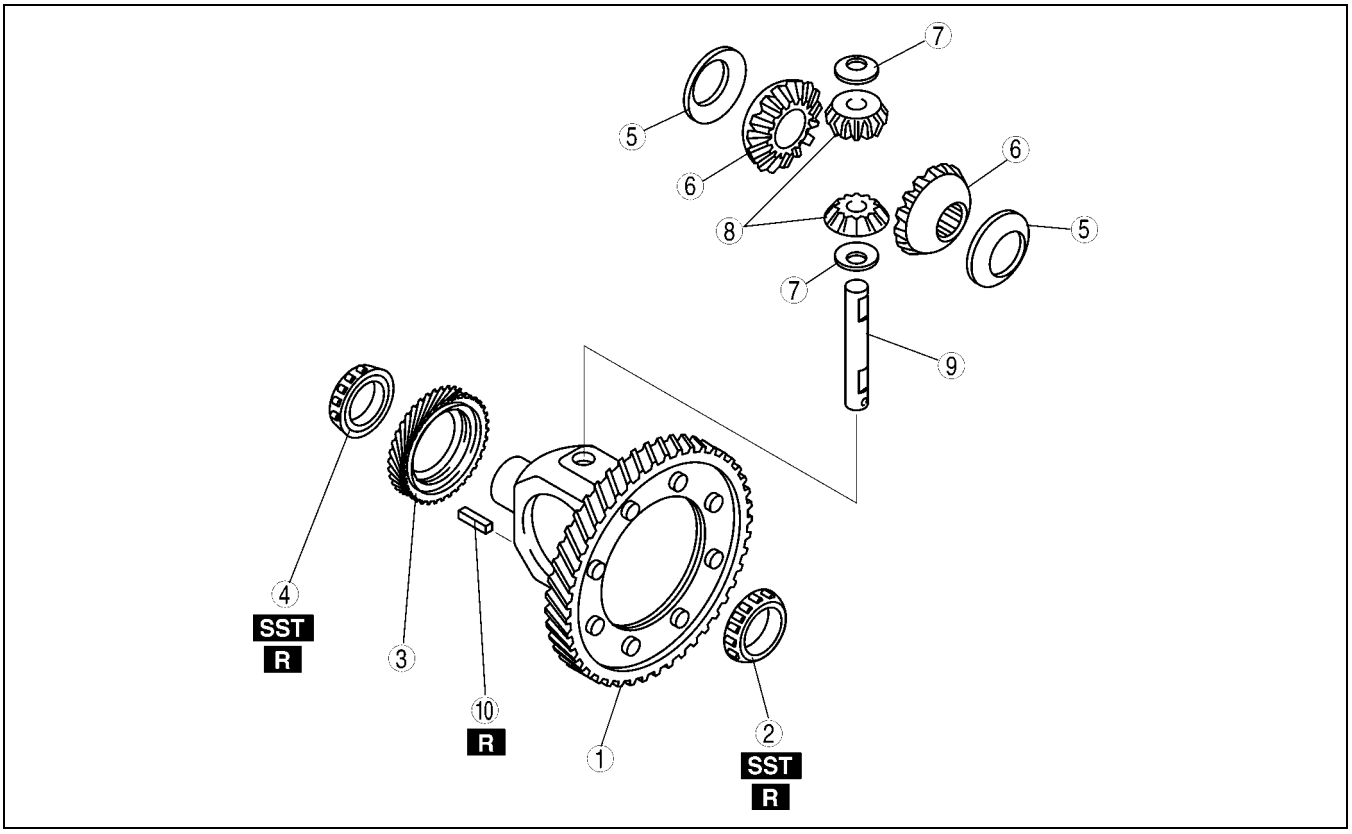

Z4F5112M064

1	Ring gear and gear case component
2	Bearing (ring gear side) (See J–30 Bearing (Ring Gear Side) Assembly Note)
3	Speedometer drive gear
4	Bearing (side opposite ring gear) (See J–30 Bearing (Side Opposite Ring Gear) Assembly Note)
5	Thrust washer

6	Side gear
7	Thrust washer
8	Pinion gear
9	Pinion shaft
10	Roll pin (See J–30 Roll Pin Assembly Note)

Bearing (Ring Gear Side) Assembly Note

1. Install the new bearing using the **SST**.

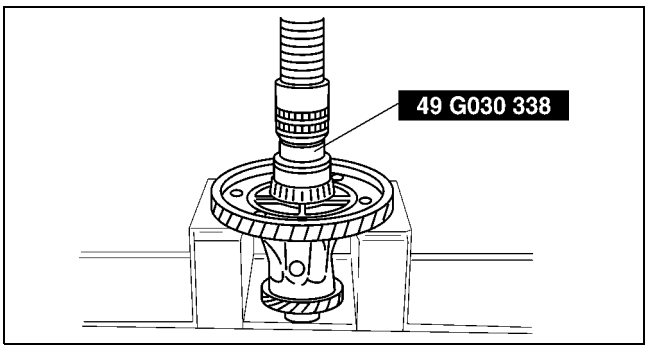

Z4F5112M065

Bearing (Side Opposite Ring Gear) Assembly Note

1. Install the speedometer drive gear.
2. Install the new bearing using the **SST**.

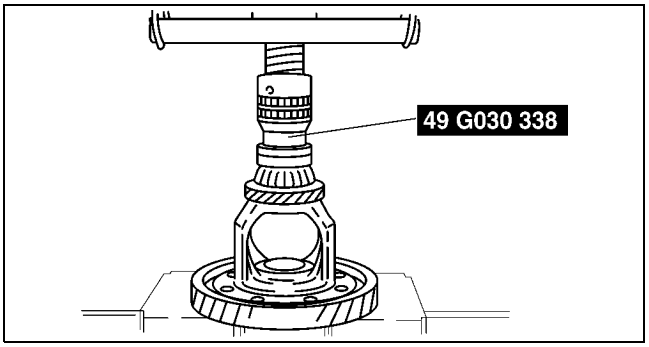

Z4F5112M066

Roll Pin Assembly Note

1. Install the new roll pin as shown in the figure to hold the pinion shaft.

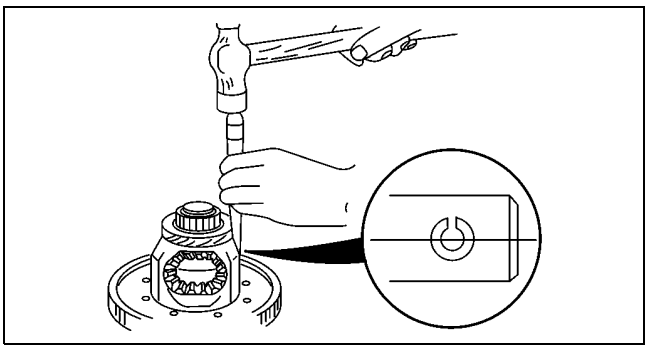

A6E5112M067

2. Measure the backlash by the following procedure.
   (1) Install the left and right drive shafts in the differential component.
   (2) Support the drive shaft on V-blocks as shown in the figure.
   (3) Measure the backlash of both pinion gears.
   - If not as specified, replace worn and damage parts.

Backlash
0.050—0.150 mm {0.0020—0.059 in}

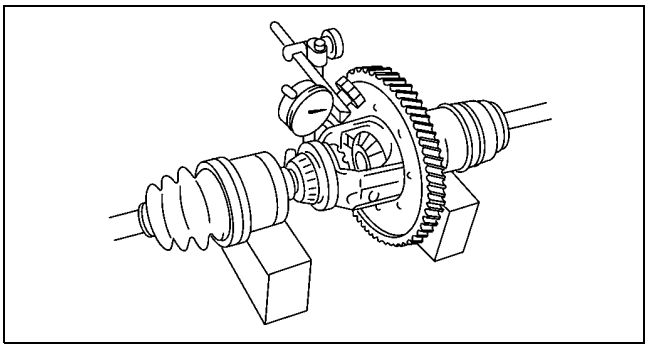

A6E5112M068

BEARING PRELOAD ADJUSTMENT

A6E511201029M05

1. Install the primary and secondary shaft bearing races into the transaxle case (shims removed).
2. Mount the clutch housing onto the transaxle hanger, and set the differential bearing race into the clutch housing. Position a piece of pipe against the bearing race and tap it in until it contacts the clutch housing.

3. Set the bearing races into the **SSTs (selector)** as shown in the figure.

   Note
   - Turn the selector to eliminate the gap indicated by the arrow in the figure.

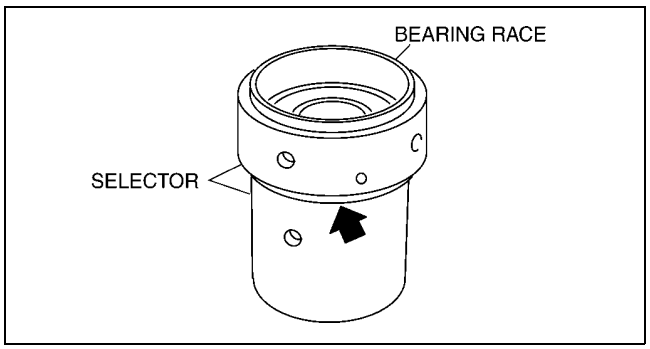

Z4F5112M069

4. Set the differential component into the clutch housing, and set the bearing race and the SST (selector) on the differential. Set the SSTs (selector) for the primary and secondary shaft in the clutch housing.
   Mount the shaft gear assemblies as shown in the figure.

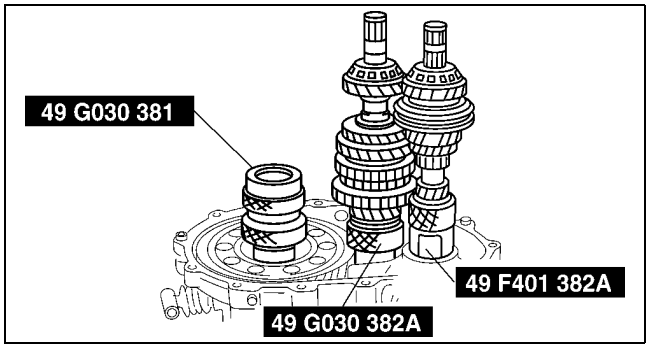

Z4F5112M070

5. Set the **SST (collars)** in the positions shown in the figure.

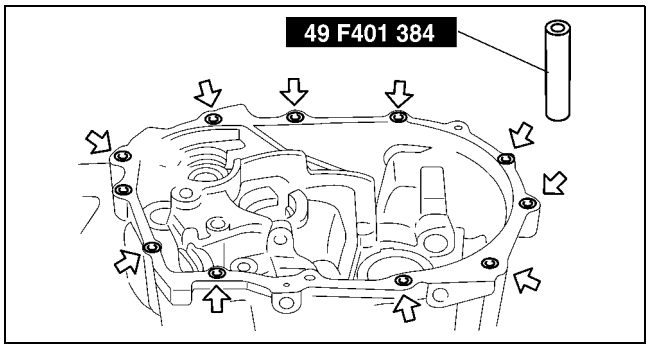

Z4F5112M071

6. Install the transaxle case and tighten the **SST (bolts)** to the specified torque.

   Tightening torque
   37.3—52.0 N·m {3.9—5.3 kgf·m, 28.2—38.3 ft·lbf}

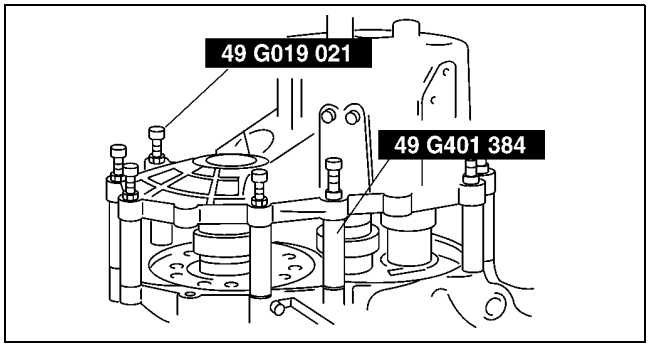

Z4F5112M072

7. To seat the bearings, mount the SST (bars) on parts A and B of the selectors, and turn the selectors so the gaps are widened.
   Then turn the **SST** in the reverse direction until the gaps are eliminated.

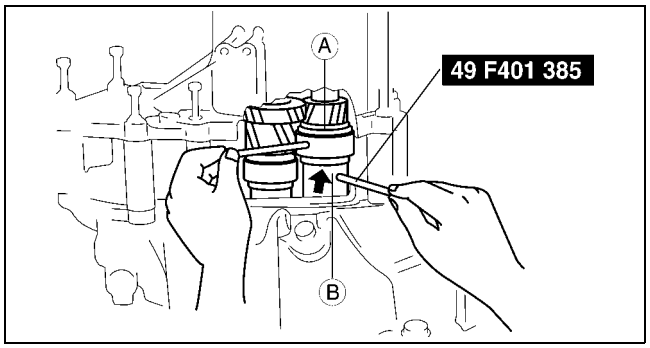

Z4F5112M073

8. Manually expand the selector until it no longer turns by hand.

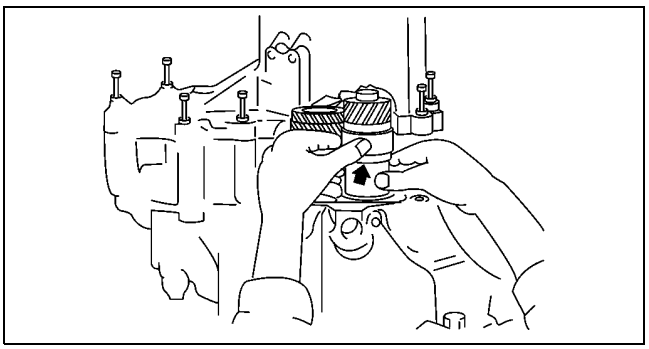

A6E5112M074

9. Use a feeler gauge to measure the gap in the **SST (selector)**.

   Caution
   - **Measure the gap around the entire circumference of the selector.**

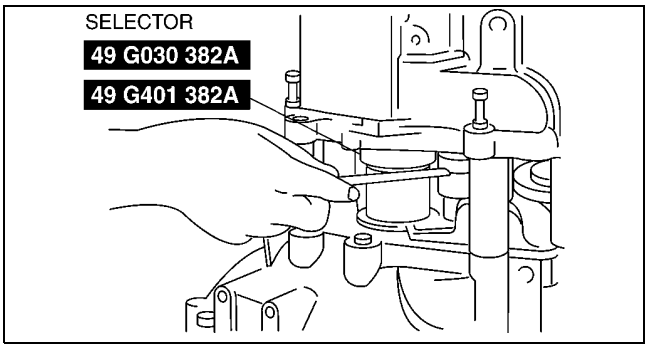

Z4F5112M075

10. Take the maximum reading and determine the shim to used as follows.
    Primary shaft adjustment shim
    - Select the thinnest allowable shim from the table to obtain standard clearance.

    Standard clearance
    0—0.05 mm {0—0.002 in}
    Example
    Reading from step 9: 0.57 mm {0.022 in}
    Shim selecting range
    (0.57 mm {0.022 in}–0.05 mm {0.002 in})—(0.57 mm {0.022 in}–0 mm {0 in})=0.52 mm {0.020 in}—0.57 mm {0.022 in}
    Shim
    0.55 mm {0.022 in}

    Secondary shaft adjustment shim
    - Select the thinnest allowable shim from the table to obtain standard clearance.

    Tightening amount
    0.03—0.08 mm {0.001—0.003 in}
    Example
    Reading from step 9: 0.57 mm {0.022 in}
    Shim selecting range
    (0.57 mm {0.022 in}+0.03 mm {0.001 in})—(0.57 mm {0.022 in}+0.08 mm {0.003 in})=0.60 mm {0.024 in}—0.65 mm {0.026 in}
    Shim
    0.60 mm {0.024 in}

Thickness of shim

mm{in}

0.20 {0.008}	0.25 {0.010}	0.30 {0.012}	0.35 {0.014}
0.40 {0.016}	0.45 {0.018}	0.50 {0.020}	0.55 {0.022}
0.60 {0.024}	0.65 {0.026}	0.70 {0.028}	–

11. Install the **SST** and a pull scale or torque wrench.

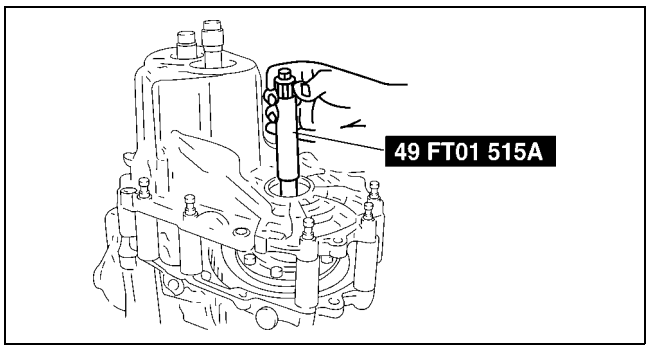

Z4F5112M076

12. Adjust the clearance of the **SST (selector)** to obtain the specified preload/pull scale reading.

Note
- Read the preload when the differential starts to turn.
- Measure several times and calculate the average value.

Preload
0.5 N·m {5.0 kgf·cm, 4.3 in·lbf}
Reading on pull scale
5 N {0.5 kgf, 1.1 lbf}

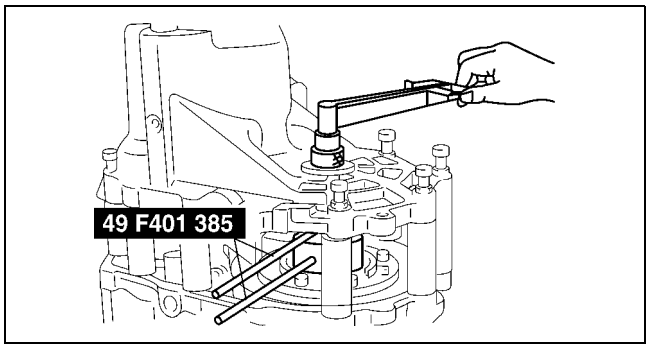

Z4F5112M077

13. Use a feeler gauge to measure the gap in the selector for the differential.
14. Add **0.15 mm{0.006 in}** to the measured clearance and select the combination of shims closest in value to that measurement.

Example
0.32 mm {0.013 in}
0.32 mm {0.013 in}+0.15 mm {0.006 in}=0.47 mm {0.019 in}
Nearest shim (on thick side) to 0.47 mm {0.019 in} is 0.50 mm {0.020 in}

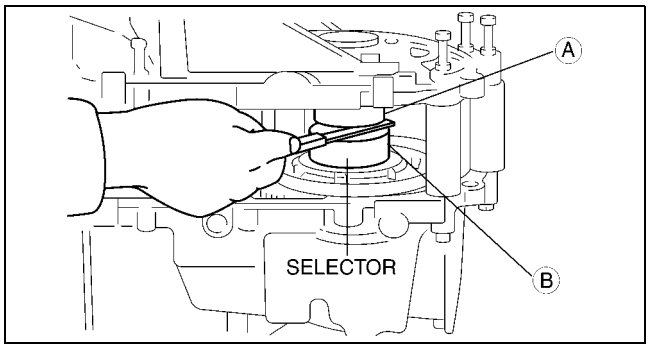

Z4F5112M078

Thickness of shim

mm{in}

0.1 {0.004}	0.20 {0.008}	0.25 {0.010}	0.30 {0.012}
0.35 {0.014}	0.40 {0.016}	0.45 {0.018}	0.50 {0.020}
0.55 {0.022}	0.60 {0.024}	0.65 {0.026}	0.70 {0.028}
0.75 {0.030}	0.80 {0.031}	0.85 {0.033}	0.90 {0.035}
0.95 {0.037}	1.0 {0.039}	1.05 {0.041}	1.10 {0.043}
1.15 {0.045}	1.20 {0.047}	–	–

15. Remove the transaxle case and the **SST**.
16. Remove the selectors, the primary shaft component, and the differential.
17. Remove the bearing races.

18. Install the adjustment shim(s) and install the bearing race using a suitable pipe.

Caution
- **Use the adjustment shim(s) selected during bearing preload adjustment.**

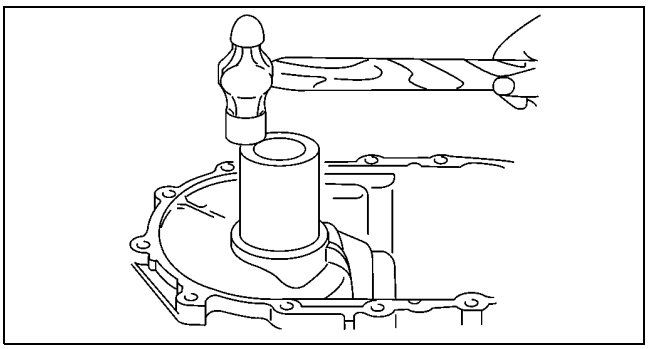

A6E5112M079

19. Install the adjustment shim(s) and install the bearing race using a suitable pipe.

Caution
- **Use the adjustment shim(s) selected during bearing preload adjustment.**

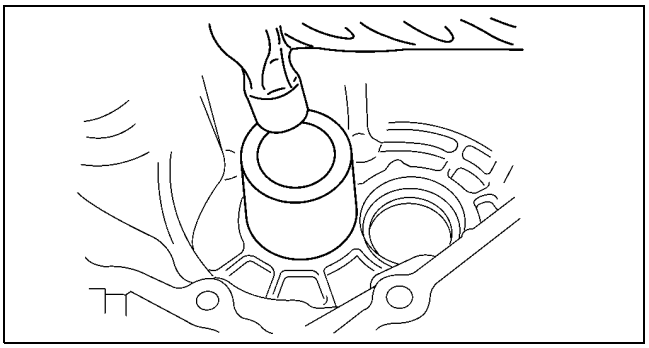

A6E5112M103

20. Set the primary shaft gear component and the differential into the clutch housing.
21. Install the transaxle case, and tighten to the specified torque.

Tightening torque
37.3—52.0 N·m {3.8—5.3 kgf·m, 27.5—38.3 ft·lbf}

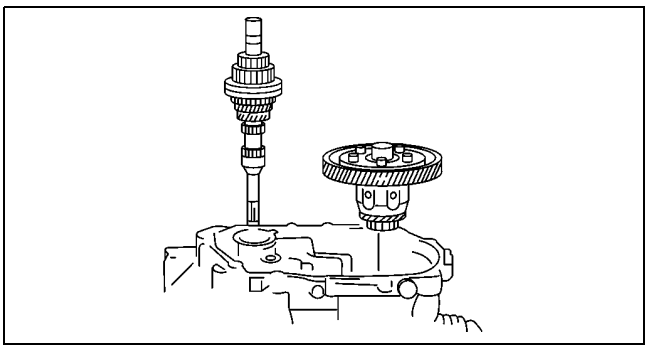

A6E5112M080

22. Install the **SST** and a pull scale or torque wrench.
23. Verify that the preload is within the specification.
    - If not as specified, return to Step 1.

Preload
1.4—1.9 Nm {14—20 kgf·cm, 13—17 in·lbf}
Reading on pull scale
14—19 N {1.4—2.0 kgf, 3.1—4.4 lbf}

24. Remove the **SST**.

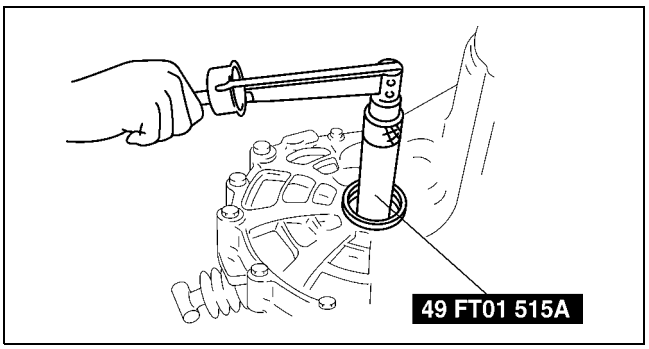

A6E5112M081

25. With the transaxle facing in the direction shown in the figure, install the **SST** to the primary shaft gear component.
26. Verify that the preload is within the specification.
    - If not as specified, return to Step 1.

Preload
0.12—0.39 N·m {1.2—4.0 kgf·cm, 1.05—3.47 in·lbf}
Reading on pull scale
1.2—3.9 N {0.12—0.40 kgf, 0.27—0.88 lbf}

27. Remove the **SST**, transaxle case, primary shaft gear component and differential.

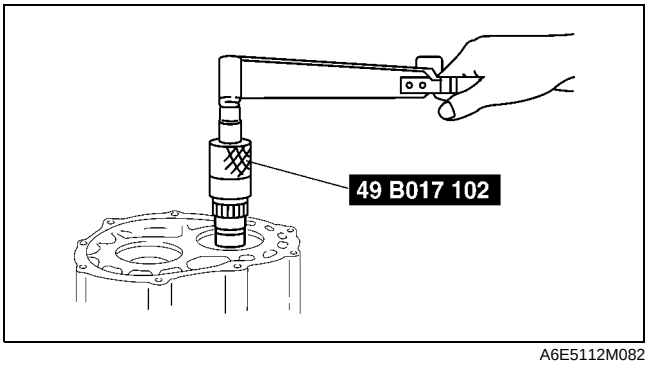

A6E5112M082

28. Install the secondary shaft gear component and transaxle case, then tighten to the specified torque.

Tightening torque
37.3—52.0 N·m {3.8—5.3 kgf·m, 27.5—38.3 ft·lbf}

29. Install the **SST** and a pull scale or torque wrench.
30. Verify that the preload is within the specification.
    - If not as specification, return to Step 1.

Preload
0.2—0.3 N·m {2.0—4.0 kgf·cm, 1.8—3.4 in·lbf}
Reading on pull scale
2—3 N {0.2—0.4 kgf, 0.5—0.8 lbf}

31. Remove the **SST** and transaxle case.

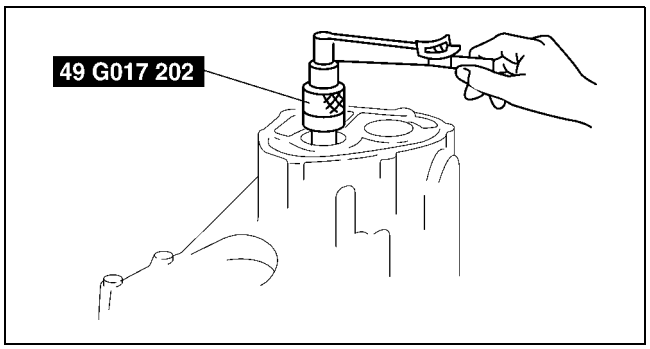

Z4F5112M083

CLUTCH HOUSING AND TRANSAXLE CASE COMPONENTS ASSEMBLY

A6E511217010M02

1. Assemble in the order shown in the figure..

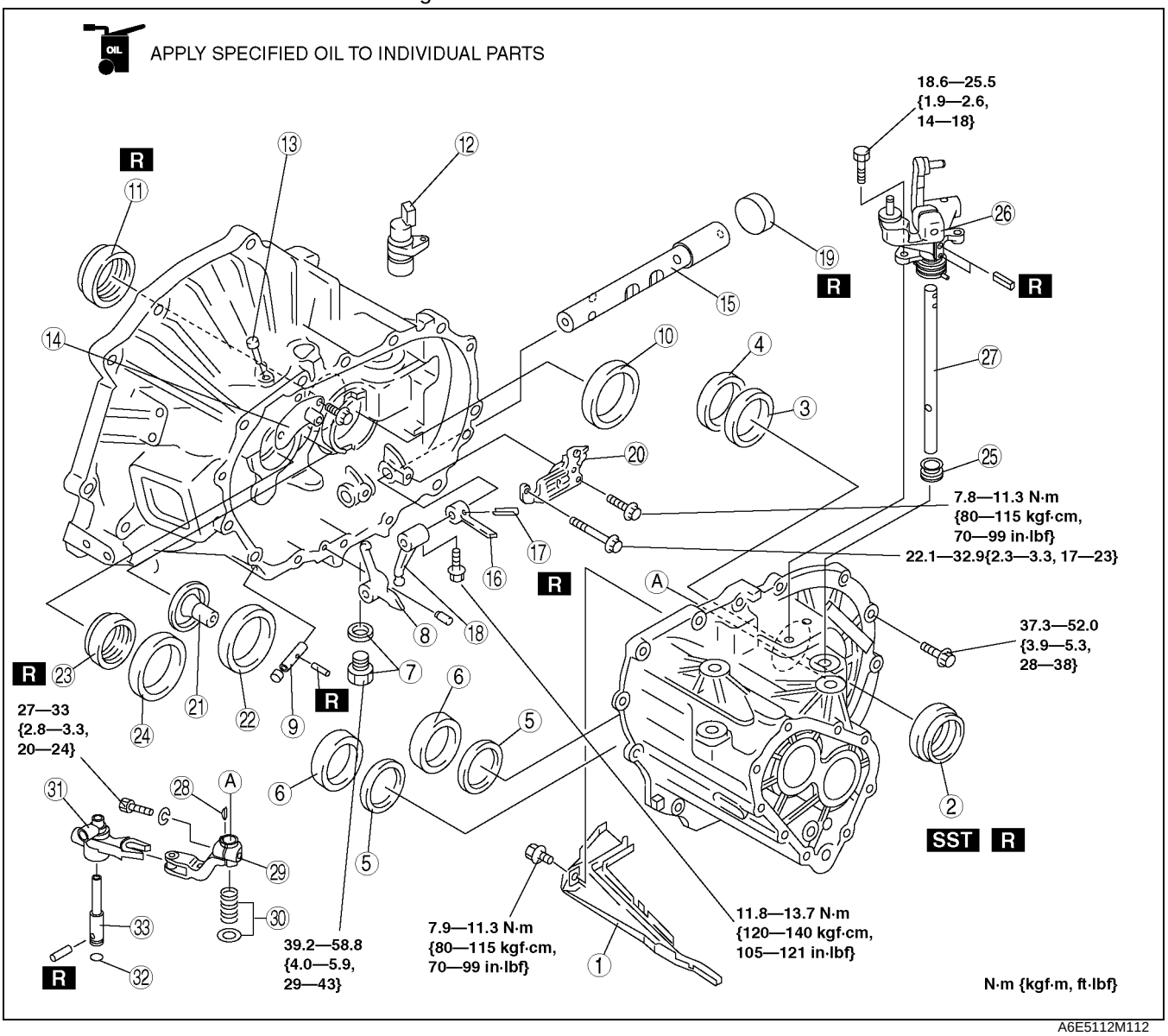

A6E5112M112

1	Oil passage
2	Oil seal (differential) (See J–37 Oil Seal (Differential) Assembly Note)
3	Adjustment shim(s)
4	Bearing race (differential) (See J–37 Bearing Race (Differential) Assembly Note)
5	Adjustment shim(s)
6	Bearing race (transaxle case) (See J–37 Bearing Race (Transaxle Case) Assembly Note)
7	Drain plug and washer
8	Reverse lever
9	Reverse lever shaft
10	Bearing race (differential) (See J–37 Bearing Race (Differential) Assembly Note)
11	Oil seal (differential) (See J–37 Oil Seal (Differential) Assembly Note)
12	Hole cover
13	Bleather

14	Bleather cover component
15	Control rod
16	Selector
17	Roll pin
18	Change arm
19	Sealing cap
20	Guide plate component
21	Funnel
22	Bearing race (secondary shaft)
23	Oil seal (primary shaft) (See J–38 Oil Seal (Primary Shaft)Assembly Note)
24	Bearing race (primary shaft)
25	Boots
26	Shift lever component
27	shift lever shaft
28	Key
29	Control end
30	Spring and washer
31	Clank component lever

32	O-ring
33	Crank lever shaft

Oil Seal (Differential) Assembly Note
1. Apply transaxle oil to the new oil seal lip.
2. Install the oil seal using the **SST**.

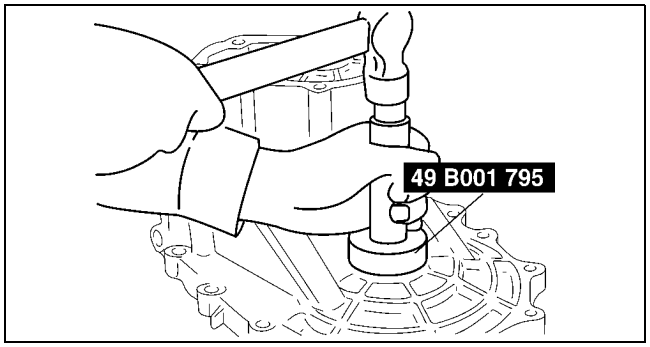

Z4F5112M085

Bearing Race (Differential) Assembly Note
1. Install the adjustment shim(s) and install the bearing race using a suitable pipe.

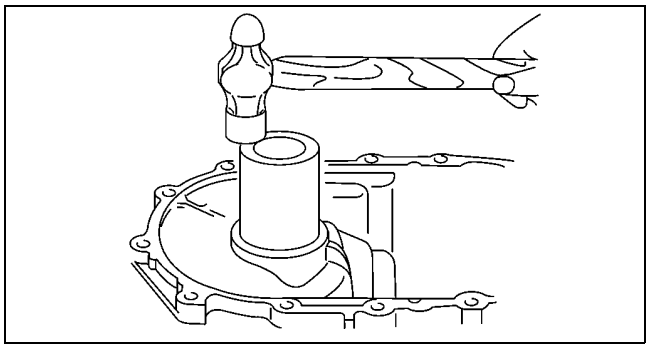
A6E5112M079

Bearing Race (Transaxle Case) Assembly Note
1. Install the adjustment shim(s) and install the bearing race using a suitable pipe.

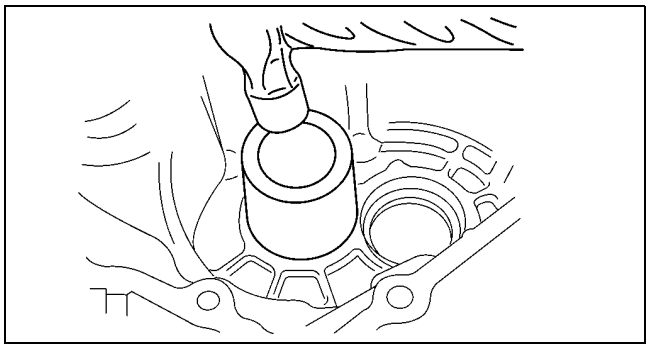
A6E5112M103

Oil Seal (Change Rod Component) Assembly Note
1. Apply transaxle oil to the new oil seal lip.
2. Install the oil seal using a suitable pipe.

Outer diameter of pipe
26.0 mm {1.02 in}

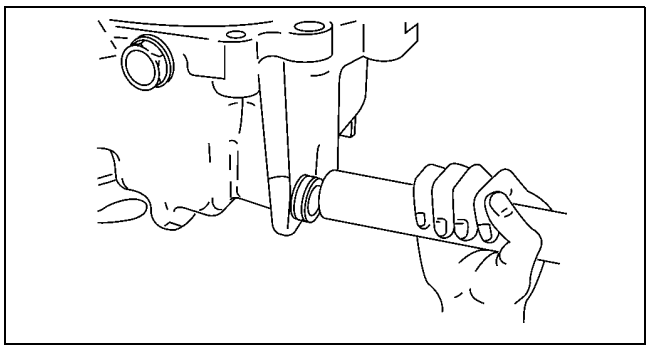
A6E5112M086

Oil Seal (Primary Shaft)Assembly Note

1. Apply transaxle oil to outer circumference of the oil seal.
2. Install the new oil seal using a suitable pipe.

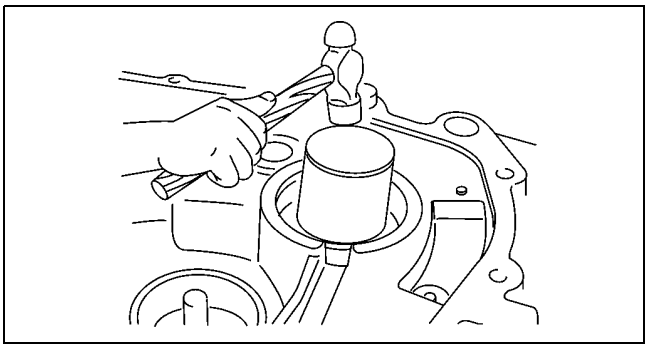

A6E5112M088

5TH/REVERSE GEAR AND HOUSING PARTS ASSEMBLY

A6E511201029M06

1. Assemble in the order shown in the figure.

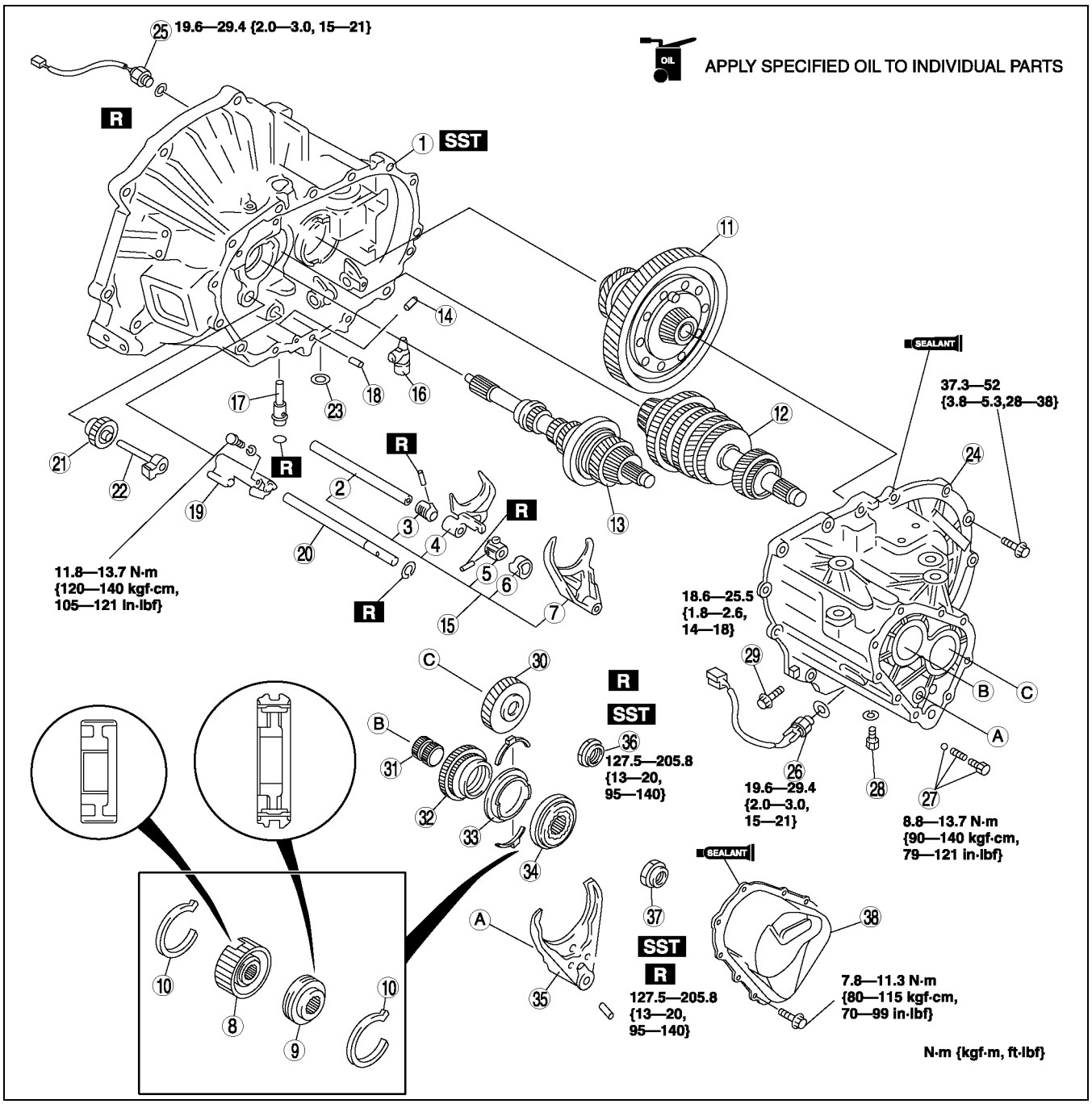

A6E5112M119

1	Clutch housing (See J–39 Clutch Housing Assembly Note)
2	Control rod
3	Control end
4	1st/2nd shift fork
5	Control lever
6	Interlock lever
7	3rd/4th shift fork
8	Clutch hub
9	Clutch hub sleeve
10	Synchronizer key springs
11	Differential component
12	Secondary shaft gear component (See J–40 Primary Shaft Gear Component and Secondary Shaft Gear Component Assembly Note)
13	Primary shaft gear component (See J–40 Primary Shaft Gear Component and Secondary Shaft Gear Component Assembly Note)
14	Push pin
15	Shift fork and shift rod component (See J–40 Shift Fork and Shift Rod Component Assembly Note)
16	Crank lever component (See J–40 Crank Lever Component and Crank Lever Shaft Assembly Note)
17	Crank lever shaft (See J–40 Crank Lever Component and Crank Lever Shaft Assembly Note)
18	Pin
19	5th/reverse shift rod end (See J–41 5th/Reverse Shift Rod End and 5th/Reverse Shift Rod Assembly Note)
20	5th/reverse shift rod (See J–41 5th/Reverse Shift Rod End and 5th/Reverse Shift Rod Assembly Note)
21	Reverse idle gear (See J–41 Reverse Idle Gear and Reverse Idle Shaft Assembly Note)
22	Reverse idle shaft (See J–41 Reverse Idle Gear and Reverse Idle Shaft Assembly Note)
23	Magnet
24	Transaxle case component (See J–41 Transaxle Case Component Assembly Note)
25	Neutral switch
26	Back-up light switch
27	Lock bolt, ball and spring
28	Guide bolt
29	Lock bolt
30	Secondary 5th gear (See J–42 Secondary 5th Gear Assembly Note)
31	Gear sleeve
32	5th gear
33	5th synchronizer ring
34	5th/reverse clutch hub component (See J–42 5th/Reverse Clutch Hub Component and 5th/Reverse Shift Fork Assembly Note)
35	5th/reverse shift fork (See J–42 5th/Reverse Clutch Hub Component and 5th/Reverse Shift Fork Assembly Note)
36	Locknut (secondary shaft) (See J–42 Locknut Assembly Note)
37	Locknut (primary shaft) (See J–42 Locknut Assembly Note)
38	Rear cover

Clutch Housing Assembly Note

1. Assemble the **SST**.
2. Assembly clutch housing on the **SST**.

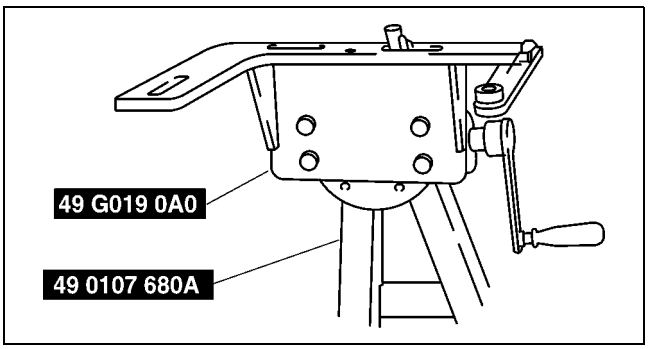

A6E5112M108

Primary Shaft Gear Component and Secondary Shaft Gear Component Assembly Note

1. Install the primary shaft gear component and the secondary shaft gear component together.

Shift Fork and Shift Rod Component Assembly Note

1. Shift to 2nd gear and position the shift fork and shift rod component as shown.

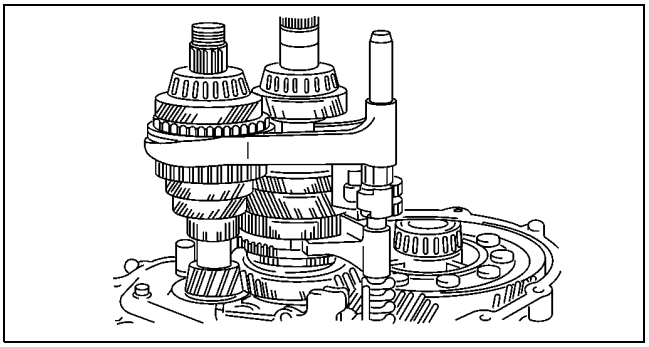

A6E5112M091

2. Insert the spring seat and spring into the reverse lever shaft, install the steel ball, and place a scraper so that it contacts the steel ball.
3. With the edge of the control end against the scraper, when the control end is pushed in the direction of the arrow in the figure so that the ball goes into the shaft, the rod will at the same time line up with the shift rod coupling hole in the clutch housing.

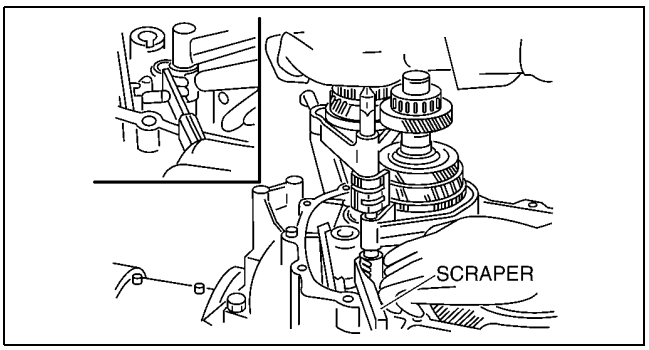

Z4F5112M092

4. Set each clutch hub sleeve to the neutral position, and tap the shift rod from above so that the steel ball goes into the center groove (of the three grooves in the control end).
5. Pull the ball part of the control end forward so that the steel ball goes into the detent in the groove.

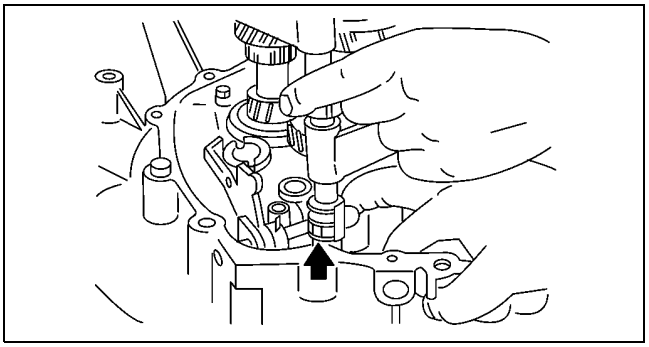

A6E5112M093

Crank Lever Component and Crank Lever Shaft Assembly Note

1. Fit the crank lever between the change arm and the control end, and connect the crank lever shaft to the crank lever.
2. Aligh the pin holes of the crank lever shaft and the clutch housing, and insert a new pin.

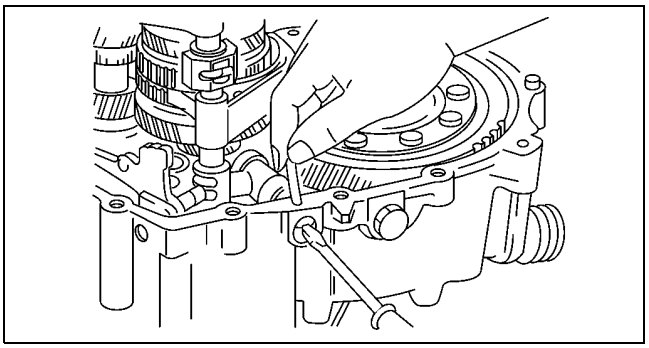

A6E5112M094

5th/Reverse Shift Rod End and 5th/Reverse Shift Rod Assembly Note

Note
- The mark (indicated by the arrow in the figure) and the shift rod end mounting bolt hole must be aligned.

1. Install shift rod end 1 and the shift rod 2, and tighten the gate mounting bolt.

Tightening torque
11.8—13.7 N·m {120—140 kgf·cm,105—121 in·lbf}

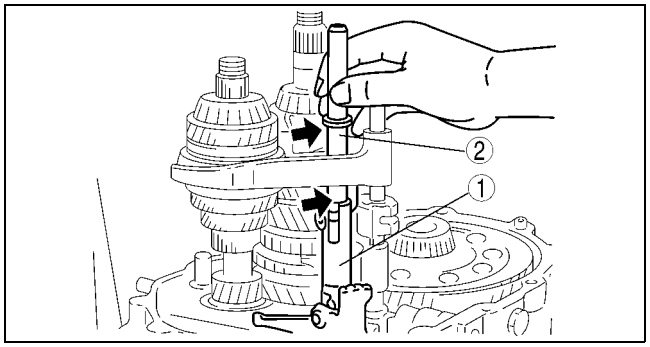

Z4F5112M095

Reverse Idle Gear and Reverse Idle Shaft Assembly Note

1. Install the reverse idle gear and the reverse idler shaft.
2. Attach the magnet to the clutch housing.
3. Aligh the end of the interlock sleeve with the control lever (arrow), and at the same time, face the reverse idle shaft screw hole in the direction shown in the figure.

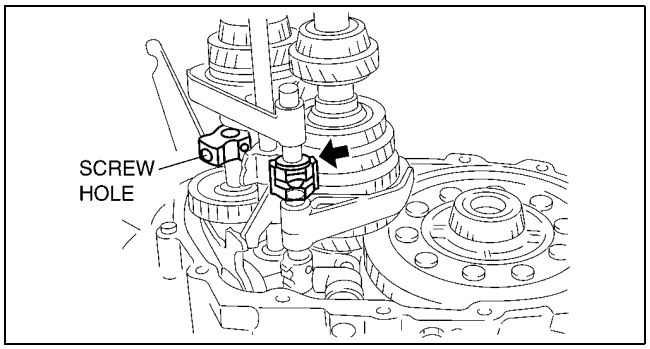

Z4F5112M096

Transaxle Case Component Assembly Note

1. Apply a thin coat of sealant to the contact surfaces of the clutch housing and transaxle case, and tighten the transaxle case installation bolts to the specified torque.

Tightening torque
37.3—52.0 N·m {3.8—5.3 kgf·m, 28—38 ft·lbf}

2. Install the **SSTs** through the drive shaft and joint shaft hole.

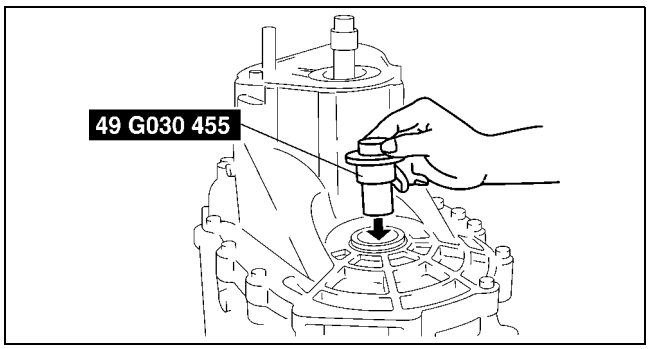

Z4F5112M097

Secondary 5th Gear Assembly Note

1. Install the secondary 5th gear as shown.

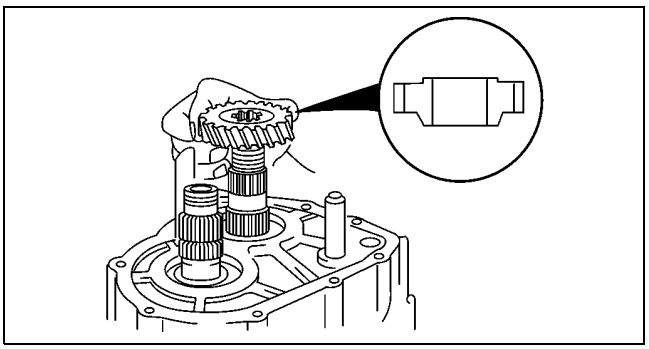

A6E5112M098

5th/Reverse Clutch Hub Component and 5th/Reverse Shift Fork Assembly Note

1. Install the 5th/reverse clutch hub component and the 5th/reverse shift fork together.

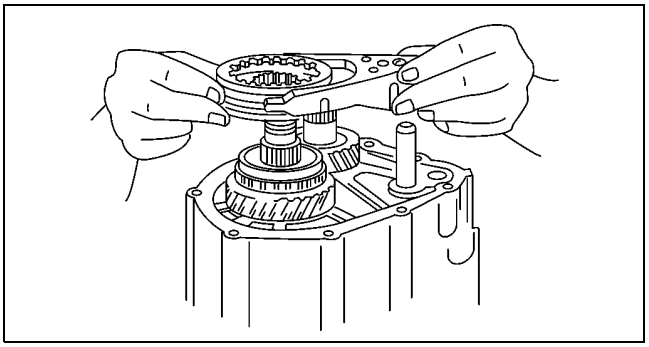

A6E5112M099

Locknut Assembly Note

1. Shift to 1st gear.
2. Lock the primary shaft using the **SST**.
3. Tighten new lock nuts onto the primary and secondary shafts.

   Tightening torque
   127.5—205.8 N·m {13.0—20.0 kgf·m, 95—144 ft·lbf}

4. Stake the locknuts.

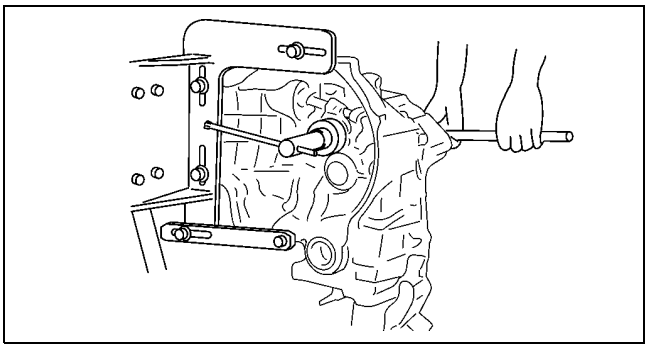

A6E5112M100

5. Measure the 5th gear thrust clearance using a dial indicator.
   - If not as specified, reassemble the transaxle.

   Clearance
   0.100—0.220 mm {0.0039—0.0087 in}
   Maximum
   0.270 mm {0.0106 in}

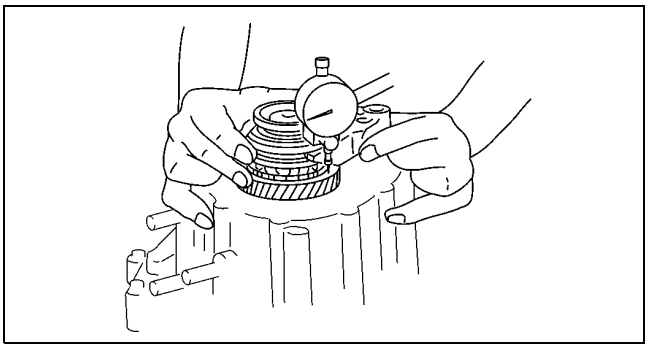

A6E5112M101

TECHNICAL DATA

TECHNICAL DATA TD-2
MANUAL TRANSAXLE TD-2

TECHNICAL DATA

MANUAL TRANSAXLE

A6E931001029M01

Item				Specification
Transaxle type				G35M-R
Thrust clearance	1st gear	Clearance	(mm {in})	0.05—0.28 {0.002—0.011}
		Maximum	(mm {in})	0.33 {0.013}
	2nd gear	Clearance	(mm {in})	0.18—0.46 {0.007—0.018}
		Maximum	(mm {in})	0.51 {0.020}
	3rd gear	Clearance	(mm {in})	0.05—0.20 {0.002—0.007}
		Maximum	(mm {in})	0.25 {0.010}
	4th gear	Clearance	(mm {in})	0.17—0.37 {0.007—0.014}
		Maximum	(mm {in})	0.42 {0.017}
	5th gear	Clearance	(mm {in})	0.100—0.220 {0.0040—0.0086}
		Maximum	(mm {in})	0.270 {0.0106}
Oil clearance	1st gear	1st gear inner diameter	(mm {in})	39.500—39.525 {1.555—1.556}
		Secondary shaft outer diameter	(mm {in})	39.445—39.470 {1.553—1.554}
		Clearance	(mm {in})	0.030—0.080 {0.002—0.003}
	2nd gear	2nd gear inner diameter	(mm {in})	35.015—35.035 {1.378—1.379}
		Secondary shaft outer diameter	(mm {in})	34.945—34.905 {1.376—1.374}
		Clearance	(mm {in})	0.05—0.09 {0.002—0.003}
	3rd gear	3rd gear inner diameter	(mm {in})	36.000—36.025 {1.417—1.418}
		Primary shaft outer diameter	(mm {in})	35.945—35.970 {1.415—1.416}
		Clearance	(mm {in})	0.030—0.080 {0.001—0.003}
	4th gear	4th gear inner diameter	(mm {in})	31.000—31.025 {1.220—1.221}
		Primary shaft outer diameter	(mm {in})	30.945—30.970 {1.218—1.219}
		Clearance	(mm {in})	0.030—0.080 {0.001—0.003}
	5th gear	5th gear inner diameter	(mm {in})	34.000—34.025 {1.3386—1.3395}
		Sleeve outer diameter	(mm {in})	33.945—33.970 {1.3365—1.3373}
		Clearance	(mm {in})	0.030—0.080 {0.0012—0.0031}
Shift fork and hub sleeve	Clearance between 1st/2nd shift fork and hub sleeve	Standard	(mm {in})	0.10—0.45 {0.004—0.017}
		Maximum	(mm {in})	0.95 {0.037}
	Clearance between 3rd/4th shift fork and hub sleeve	Standard	(mm {in})	0.10—0.40 {0.004—0.015}
		Maximum	(mm {in})	0.90 {0.035}
	Clearance between 5th shift fork and hub sleeve	Standard	(mm {in})	0.10—0.36 {0.004—0.014}
		Maximum	(mm {in})	0.86 {0.034}
Synchronizer ring	Clearance between synchronizer ring and flank surface of gear	Standard	(mm {in})	1.50 {0.059}
		Maximum	(mm {in})	0.80 {0.031}
Reverse idle gear and reverse lever	Clearance between reverse idle gear bushing and reverse lever	Standard	(mm {in})	0.10—0.35 {0.004—0.013}
		maximum	(mm {in})	0.85 {0.033}

Item			Specification
Primary shaft gear	Runout	(mm {in})	0.050 {0.0020}max.
	Bearing preload	(N·m {kgf·cm, in·lbf})	0.12—0.39 {1.2—4.0, 1.05—3.47}
	Preload adjust shims	(mm {in})	0.20 {0.008}, 0.25 {0.010}, 0.30 {0.012}, 0.35 {0.014}, 0.40 {0.016}, 0.45 {0.018}, 0.50 {0.020}, 0.55 {0.022}, 0.60 {0.024}, 0.65 {0.026}, 0.70 {0.028}
Secondary shaft gear	Runout	(mm {in})	0.015 {0.0006}max.
	Bearing preload	(N·m {kgf·cm, in·lbf})	0.2—0.3 {2.0—4.0, 1.8—3.4}
	Preload adjust shims	(mm {in})	0.20 {0.008}, 0.25 {0.010}, 0.30 {0.012}, 0.35 {0.014}, 0.40 {0.016}, 0.45 {0.018}, 0.50 {0.020}, 0.55 {0.022}, 0.60 {0.024}, 0.65 {0.026}, 0.70 {0.028}
Differential	Differential bearing preload	(N·m {kgf·cm, in·lbf})	1.4—1.9 {14—20, 13—17}
	Preload adjust shims	(mm {in})	0.1 {0.004}, 0.20 {0.008}, 0.25 {0.010}, 0.30 {0.012}, 0.35 {0.014}, 0.40 {0.016}, 0.45 {0.018}, 0.50 {0.020}, 0.55 {0.022}, 0.60 {0.024}, 0.65 {0.026}, 0.70 {0.028}, 0.75 {0.030}, 0.80 {0.031}, 0.85 {0.033}, 0.90 {0.035}, 0.95 {0.037}, 1.0 {0.039}, 1.05 {0.041}, 1.10 {0.043}, 1.15 {0.045}, 1.20 {0.047}
	Backlash of side gear and pinion gear	Standard (mm {in})	0.050—0.150 {0.0020—0.059}

SPECIAL TOOLS

SPECIAL TOOLS ST-2
MANUAL TRANSAXLE ST-2

SPECIAL TOOLS

MANUAL TRANSAXLE

A6E941001029M01

49 0107 680A Engine stand 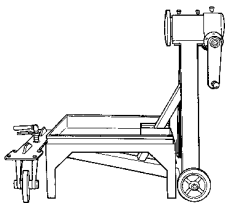	49 G019 0A0 Transaxle hanger set 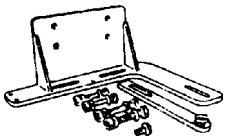	49 0839 425C Bearing puller set 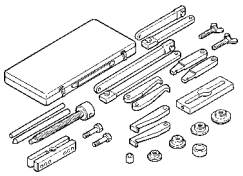
49 FT01 361 Bearing remover 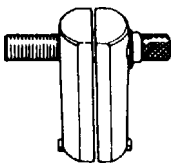	46 0636 145 Fan pulley boss puller 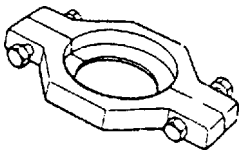	498 G030 370 Removing plate 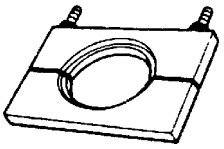
49 F401 366A Plate 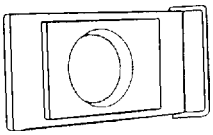	49 G030 795 Oil seal installer 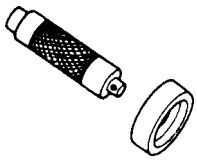	49 G030 440 Primary shaft holder 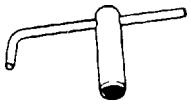
49 B017 207 Attachment G 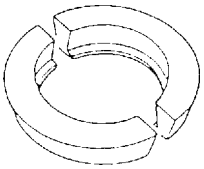	49 B017 208 Attachment H 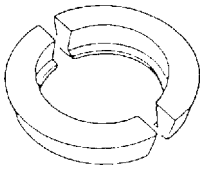	49 B017 209 Attachment J 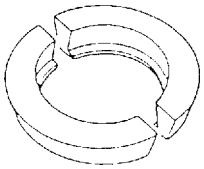
49 F401 331 Body 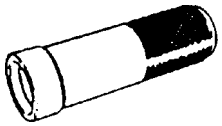	49 F401 335A Attachment A 	49 F401 336B Attachment B 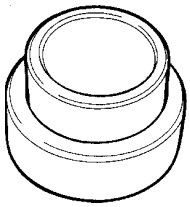
49 G030 338 Attachment E 	49 G030 380D Shim selector set 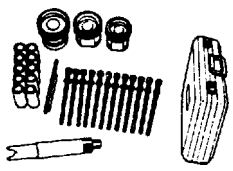	49 G017 202 Preload adapter 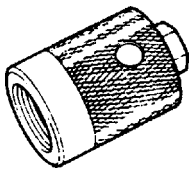
49 B017 102 Preload adapter 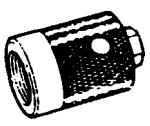	49 G030 455 Diff. side gear holder 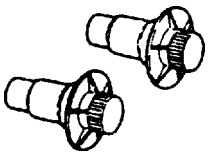	—

Mazda6 Workshop Manual

FOREWORD

This manual contains on-vehicle service and diagnosis for the Mazda6.

For proper repair and maintenance, a thorough familiarization with this manual is important, and it should always be kept in a handy place for quick and easy reference.

All the contents of this manual, including drawings and specifications, are the latest available at the time of printing.
As modifications affecting repair or maintenance occur, relevant information supplementary to this volume will be made available at Mazda dealers. This manual should be kept up-to-date.

Mazda Motor Corporation reserves the right to alter the specifications and contents of this manual without obligation or advance notice.

All rights reserved. No part of this book may be reproduced or used in any form or by any means, electronic or mechanical—including photocopying and recording and the use of any kind of information storage and retrieval system—without permission in writing.

Mazda Motor Corporation
HIROSHIMA, JAPAN

APPLICATION:
This manual is applicable to vehicles beginning with the Vehicle Identification Numbers (VIN), and related materials shown on the following page.

CONTENTS

Title	Section
General Information	GI
Engine	B
Lubrication System	D
Cooling System	E
Fuel and Emission Control Systems	F
Engine Electrical System	G
Clutch	H
Manual Transaxle	J
Automatic Transaxle	K
Front and Rear Axles	M
Steering System	N
Braking System	P
Suspension	R
Body	S
Body Electrical System	T
Heater and Air Conditioner Systems	U
Technical Data	TD
Special Tools	ST

© 2002 Mazda Motor Corporation
PRINTED IN The Netherlands, MARCH 2002
1730–1E–02C

VEHICLE IDENTIFICATION NUMBERS (VIN)

U.K. specs.

JMZ GG12820#	100001—
JMZ GG14320#	100001—
JMZ GG14820#	100001—
JMZ GG12F20#	100001—
JMZ GG12F50#	100001—
JMZ GG14F20#	100001—
JMZ GG14F50#	100001—

European (L.H.D.) specs.

JMZ GG1232*#	100001—
JMZ GG1282*#	100001—
JMZ GG1432*#	100001—
JMZ GG1482*#	100001—
JMZ GG12F2*#	100001—
JMZ GG12F5*#	100001—
JMZ GG14F2*#	100001—
JMZ GG14F5*#	100001—

GCC specs.

JM7 GG32F**#	100001—
JM7 GG34F**#	100001—
JM7 GG42F**#	100001—
JM7 GG44F**#	100001—

RELATED MATERIALS

Mazda6 Training Manual
(European (L.H.D.), GCC Specs.) 3359–1*–02C
Engine Workshop Manual L8, LF, L3 . . . . . 1731–1*–02C
Manual Transaxle Workshop Manual
G35M–R 1732–1*–02C
Automatic Transaxle Workshop Manual
FN4A–EL. 1623–10–98E
Automatic Transaxle Workshop Manual
Supplement FN4A–EL 1746–1*–02C
Mazda6 Wiring Diagram
(European (L.H.D.), GCC specs.) 5539–1*–02C
Mazda6 Wirinig Diagram
(U.K. specs.). 5540–1*–02C
Mazda6 Bodyshop Manual
(European (L.H.D. U.K.), GCC specs.) 3360–1*–02C

* : Indicates the printing location
E: Europe
0: Japan

WARNING

Servicing a vehicle can be dangerous. If you have not received service-related training, the risks of injury, property damage, and failure of servicing increase. The recommended servicing procedures for the vehicle in this workshop manual were developed with Mazda-trained technicians in mind. This manual may be useful to non-Mazda trained technicians, but a technician with our service-related training and experience will be at less risk when performing service operations. However, all users of this manual are expected to at least know general safety procedures.

This manual contains "Warnings" and "Cautions" applicable to risks not normally encountered in a general technician's experience. They should be followed to reduce the risk of injury and the risk that improper service or repair may damage the vehicle or render it unsafe. It is also important to understand that the "Warnings" and "Cautions" are not exhaustive. It is impossible to warn of all the hazardous consequences that might result from failure to follow the procedures.

The procedures recommended and described in this manual are effective methods of performing service and repair. Some require tools specifically designed for a specific purpose. Persons using procedures and tools which are not recommended by Mazda Motor Corporation must satisfy themselves thoroughly that neither personal safety nor safety of the vehicle will be jeopardized.

The contents of this manual, including drawings and specifications, are the latest available at the time of printing, and Mazda Motor Corporation reserves the right to change the vehicle designs and alter the contents of this manual without notice and without incurring obligation.

Parts should be replaced with genuine Mazda replacement parts or with parts which match the quality of genuine Mazda replacement parts. Persons using replacement parts of lesser quality than that of genuine Mazda replacement parts must satisfy themselves thoroughly that neither personal safety nor safety of the vehicle will be jeopardized.

Mazda Motor Corporation is not responsible for any problems which may arise from the use of this manual. The cause of such problems includes but is not limited to insufficient service-related training, use of improper tools, use of replacement parts of lesser quality than that of genuine Mazda replacement parts, or not being aware of any revision of this manual.

GENERAL INFORMATION

GI

HOW TO USE THIS MANUAL GI-2
RANGE OF TOPICS GI-2
SERVICE PROCEDURE GI-2
SYMBOLS GI-4
ADVISORY MESSAGES GI-4
TROUBLESHOOTING PROCEDURE GI-5
UNITS GI-11
UNITS GI-11
FUNDAMENTAL PROCEDURES GI-12
PROTECTION OF VEHICLE GI-12
PREPARATION OF TOOLS AND MEASURING EQUIPMENT GI-12
SPECIAL SERVICE TOOLS GI-12
OIL LEAKAGE INSPECTION GI-12
DISCONNECTION OF THE NEGATIVE BATTERY CABLE GI-13
REMOVAL OF PARTS GI-13
DISASSEMBLY GI-13
INSPECTION DURING REMOVAL, DISASSEMBLY GI-14
ARRANGEMENT OF PARTS GI-14
CLEANING OF PARTS GI-14
REASSEMBLY GI-14
ADJUSTMENT GI-15
RUBBER PARTS AND TUBING GI-15
HOSE CLAMPS GI-16
TORQUE FORMULAS GI-16
VISE GI-16
DYNAMOMETER GI-17
SST GI-17
INSTALLATION OF RADIO SYSTEM GI-17
INSTALLATION OF RADIO SYSTEM GI-17
ELECTRICAL SYSTEM GI-18
ELECTRICAL PARTS GI-18
CONNECTORS GI-18
ELECTRICAL TROUBLESHOOTING TOOLS GI-22
PRECAUTIONS BEFORE WELDING GI-23
JACKING POSITIONS ,VEHICLE LIFT (2 SUPPORTS),SAFETY STANDS (RIGID RACK) POSITIONS GI-24
JACKING POSITIONS, VEHICLE LIFT (2 SUPPORTS) AND SAFETY STAND (RIGID RACK) POSITIONS GI-24
TOWING GI-26
TOWING GI-26
TOWING HOOKS GI-26
IDENTIFICATION NUMBER LOCATIONS GI-28
VEHICLE IDENTIFICATION NUMBER(VIN) GI-28
ENGINE IDENTIFICATION NUMBER GI-28
NEW STANDARDS GI-29
NEW STANDARDS GI-29
ABBREVIATIONS GI-31
ABBREVIATIONS GI-31
PRE-DELIVERY INSPECTION GI-32
PRE-DELIVERY INSPECTION GI-32
SCHEDULED MAINTENANCE GI-33
SCHEDULED MAINTENANCE TABLE GI-33

HOW TO USE THIS MANUAL

RANGE OF TOPICS

A6E201000001W01

- This manual contains procedures for performing all required service operations. The procedures are divided into the following five basic operations:
  — Removal/Installation
  — Disassembly/Assembly
  — Replacement
  — Inspection
  — Adjustment
- Simple operations which can be performed easily just by looking at the vehicle (i.e., removal/installation of parts, jacking, vehicle lifting, cleaning of parts and visual inspection) have been omitted.

SERVICE PROCEDURE

A6E201000001W02

Inspection, adjustment

- Inspection and adjustment procedures are divided into steps. Important points regarding the location and contents of the procedures are explained in detail and shown in the illustrations.

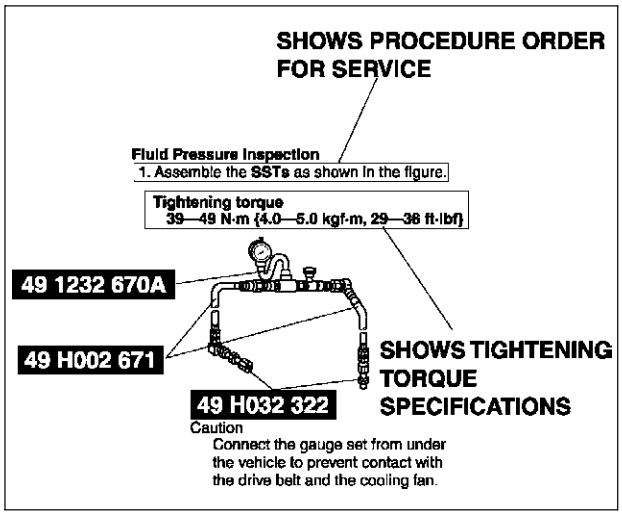

XME2010001

Repair procedure

1. Most repair operations begin with an overview illustration. It identifies the components, shows how the parts fit together and describes visual part inspection. However, only removal/installation procedures that need to be performed methodically have written instructions.
2. Expendable parts, tightening torques and symbols for oil, grease, and sealant are shown in the overview illustration. In addition, symbols indicating parts requiring the use of special service tools or equivalent are also shown.
3. Procedure steps are numbered and the part that is the main point of that procedure is shown in the illustration with the corresponding number. Occasionally, there are important points or additional information concerning a procedure. Refer to this information when servicing the related part.

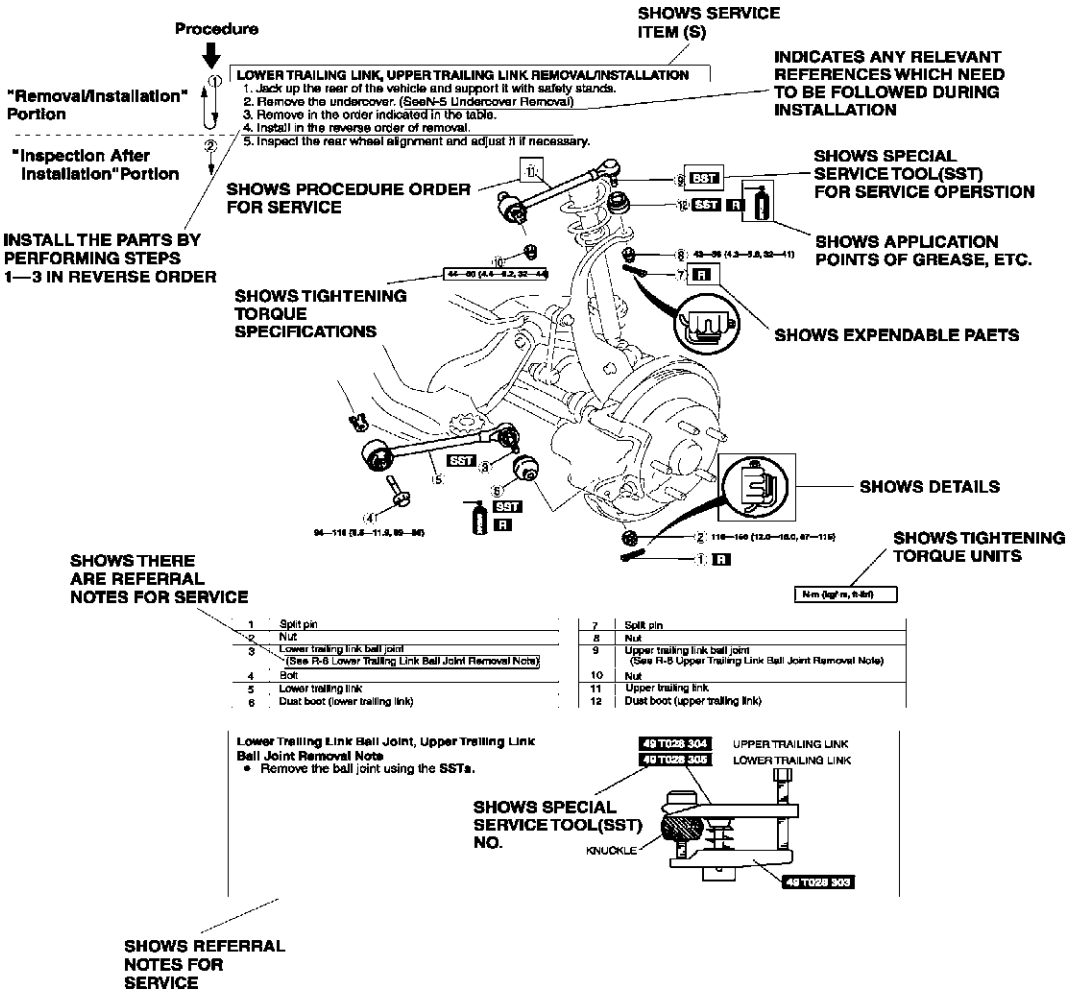

XME2010010

SYMBOLS

A6E201000001W03

- There are eight symbols indicating oil, grease, fluids, sealant, and **SST** or equivalent use. These symbols show application points or use of these materials during service.

Symbol	Meaning	Kind
	Apply oil	New appropriate engine oil or gear oil
	Apply brake fluid	New appropriate brake fluid
	Apply automatic transaxle/ transmission fluid	New appropriate automatic transaxle/ transmission fluid
	Apply grease	Appropriate grease
	Apply sealant	Appropriate sealant
	Apply petroleum jelly	Appropriate petroleum jelly
	Replace part	O-ring, gasket, etc.
	Use SST or equivalent	Appropriate tools

ADVISORY MESSAGES

A6E201000001W04

- You'll find several **Warnings**, **Cautions**, **Notes**, **Specifications** and **Upper and Lower Limits** in this manual.

Warning

- A Warning indicates a situation in which serious injury or death could result if the warning is ignored.

Caution

- A Caution indicates a situation in which damage to the vehicle or parts could result if the caution is ignored.

Note

- A Note provides added information that will help you to complete a particular procedure.

Specification

- The values indicate the allowable range when performing inspections or adjustments.

Upper and lower limits

- The values indicate the upper and lower limits that must not be exceeded when performing inspections or adjustments.

TROUBLESHOOTING PROCEDURE

A6E201000001W05

Basic flow of troubleshooting

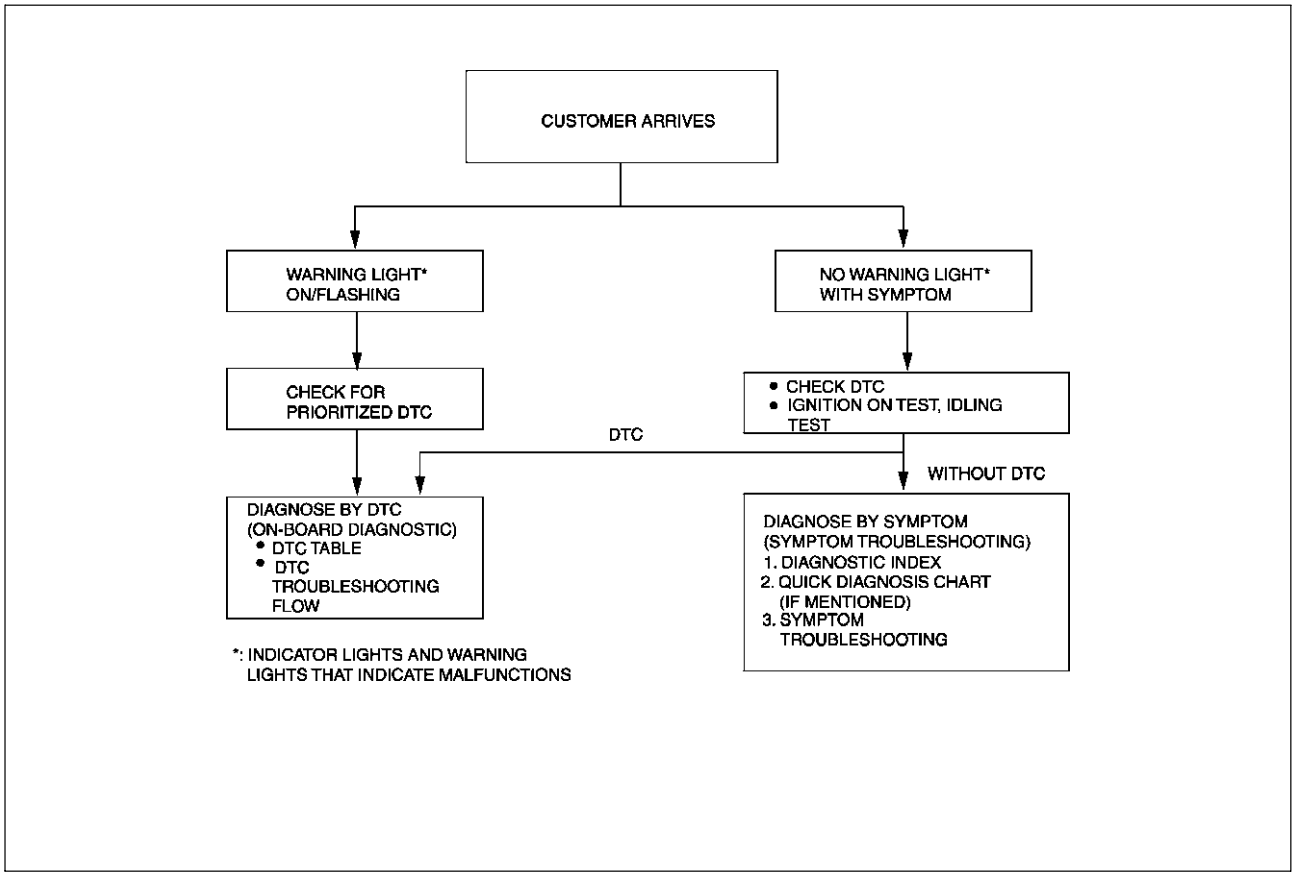

XME2010002

DTC troubleshooting flow (on-board diagnostic)

- Diagnostic trouble codes (DTCs) are important hints for repairing malfunctions that are difficult to simulate. Perform the specific DTC diagnostic inspection to quickly and accurately diagnose the malfunction.
- The on-board diagnostic function is used during inspection. When a DTC is shown specifying the cause of a malfunction, continue the diagnostic inspection according to the items indicated by the on-board diagnostic function.

Diagnostic index

- The diagnostic index lists the symptoms of specific malfunctions. Select the symptoms related or most closely relating to the malfunction.

Quick diagnosis chart (If mentioned)

- The quick diagnosis chart lists diagnosis and inspection procedures to be performed specifically relating to the cause of the malfunction.

Symptom troubleshooting

- Symptom troubleshooting quickly determines the location of the malfunction according to symptom type.

Procedures for Use
Using the basic inspection (section K)

- Perform the basic inspection procedure before symptom troubleshooting.
- Perform each step in the order shown.
- The reference column lists the location of the detailed procedure for each basic inspection.
- Although inspections and adjustments are performed according to the reference column procedures, if the cause of the malfunction is discovered during basic inspection, continue the procedures as indicated in the remarks column.

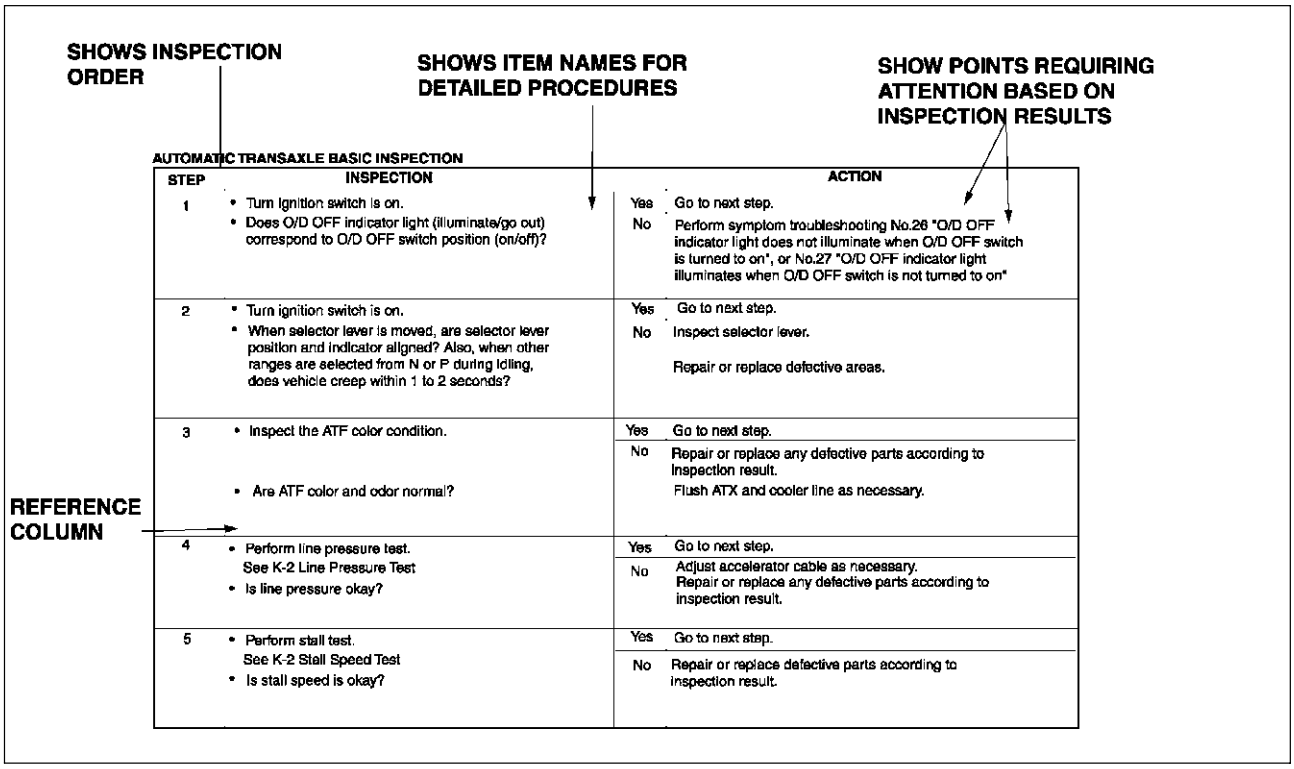

AUTOMATIC TRANSAXLE BASIC INSPECTION

STEP	INSPECTION	ACTION
1	• Turn ignition switch is on. • Does O/D OFF indicator light (illuminate/go out) correspond to O/D OFF switch position (on/off)?	Yes: Go to next step. No: Perform symptom troubleshooting No.26 "O/D OFF indicator light does not illuminate when O/D OFF switch is turned to on", or No.27 "O/D OFF indicator light illuminates when O/D OFF switch is not turned to on"
2	• Turn ignition switch is on. • When selector lever is moved, are selector lever position and indicator aligned? Also, when other ranges are selected from N or P during idling, does vehicle creep within 1 to 2 seconds?	Yes: Go to next step. No: Inspect selector lever. Repair or replace defective areas.
3	• Inspect the ATF color condition. • Are ATF color and odor normal?	Yes: Go to next step. No: Repair or replace any defective parts according to inspection result. Flush ATX and cooler line as necessary.
4	• Perform line pressure test. See K-2 Line Pressure Test • Is line pressure okay?	Yes: Go to next step. No: Adjust accelerator cable as necessary. Repair or replace any defective parts according to inspection result.
5	• Perform stall test. See K-2 Stall Speed Test • Is stall speed is okay?	Yes: Go to next step. No: Repair or replace defective parts according to inspection result.

XME2010003

Using the DTC troubleshooting flow

- DTC troubleshooting flow shows diagnostic procedures, inspection methods, and proper action to take for each DTC.

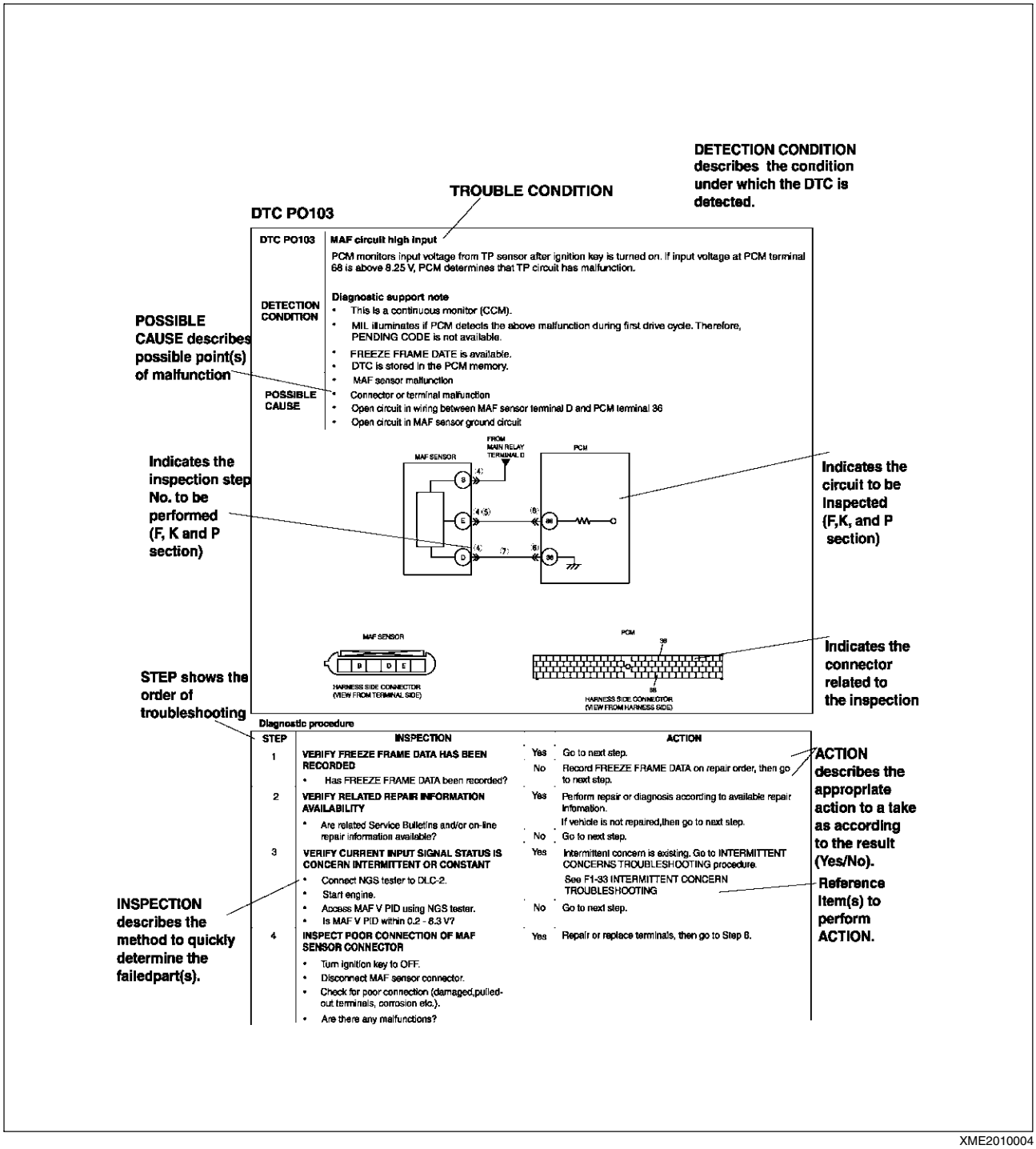

XME2010004

Using the diagnosis index

- The symptoms of the malfunctions are listed in the diagnostic index for symptom troubleshooting.
- The exact malfunction symptoms can be selected by following the index.

No.	TROUBLESHOOTING ITEM		DESCRIPTION	Page
1	Melting of main or other fuses			See F2-6 MELT NO.1 MAIN OR OTHER FUSE
2	Will not crank		Starter does not work.	See F2-7 NO.2 MIL COMES ON
3	Hard start/long crank/erratic start/erratic crank		Starter cranks engine at normal speed but engine requires excessive cranking time before starting.	See F2-8 NO. 3 WILL NOT CRANK
4	Engine stalls.	After start/at idle	Engine stops unexpectedly at idle and/or after start.	See F2-9 NO. 4 HARD START/ LONG CRANK/ERRATIC CRANK
5	Cranks normally but will not start		Starter cranks engine at normal speed but engine will not run.	See F2-11 NO. 5 ENGINE-STALLS AFTER START/AT IDLE
6	Slow return to idle		Engine takes more time than normal to return to idle speed.	See F2-15 NO.6 CRANKS NORMALLY BUT WILL NOT START
7	Engine runs rough/rotting		Engine speed fluctuates between specified idle speed and lower speed and engine shakes excessively.	See F2-19 NO. 7 SLOW RERUN TO IDLE
8	Fast idle/runs on		Engine speed continues at fast idle after warm-up. Engine runs after ignition key is turned to OFF.	See F2-20 NO. 8 ENGINE RUNS ROUGH/ROLLING IDLE
9	Low idle/stalls during deceleration		Engine stops unexpectedly at beginning of deceleration or recovery from decelertion.	See F2-23 NO. 9 FAST IDLE/RUNS ON

XME2010006

Using the quick diagnosis chart

- The chart lists the relation between the symptom and the cause of the malfunction.
- The chart is effective in quickly narrowing down the relation between symptom and cause of the malfunction. It also specifies the area of the common cause when multiple malfunction symptoms occur.
- The appropriate diagnostic inspection relating to malfunction cause as specified by the symptoms can be selected by looking down the diagnostic inspection column of the chart.

(2) PARTS WHICH MAY BE THE CAUSE OF PROBLEMS

QUICK DIAGNOSIS CHART

PART WHICH MAY BE THE SYMPTOM

(1) CHOOSE THE ACTUAL SYMPTOM

	Trouble shooting item		Possible factor: Cooling fan seated improperly	Accelerator cable free play misadjustment	Fuel quality	Engine overheating	Air cleaner element clogged or restriction	Air leakage from intake-air system (Looss tubes, cracks,broken gaskets)	IAC valve improper operation	Throttle body malfunction	Vacuum leakage (Vacuum hose damage,misrouting)	Ignition coil malfunction (e.g.open,short or cracks)	Initial ignition timing misadjustment (CMP&crankshaft pulley misadjustment)	Spark plug malfunction	High-tension leads malfunction (Cracks,open,low resistance)	CMP sensor damaged (e.g open or short circuits)
1	Melting of main or other fuses															
2	Will not crank															
3	Hard to start/long crank/erratic start/erratic crank				×		×	×			×			×	×	×
4	Engine stalls.	After start/at idle			×	×	×	×	×		×	×	×	×	×	×
5	Cranks normally but will not start				×	×		×	×		×	×	×	×	×	×
6	Slow return to idle									×						
7	Engine runs rough/rolling idle				×	×		×	×		×		×	×	×	×
8	Fast idle/runs on			×												
9	Low idle/stalls during deceleration							×	×							
	Engine stalls/quits.	Acceleration/cruise			×	×	×	×		×	×			×		×
	Enigine runs rough.	Acceleration/cruise			×	×	×	×		×	×			×		×
	Misses	Acceleration/cruise			×	×	×	×		×	×			×		×
10	Buck/jerk	Acceleration/cruise/ deceleration			×	×	×	×		×	×			×		×
	Hesitation/stumble	Acceleration			×	×	×	×		×	×			×		×
	Surges	Acceleration/cruise			×	×	×	×		×	×			×		×
11	Lack/loss of power	Acceleration/cruise			×	×	×	×		×				×		×
12	Knocking/pinging	Acceleration/cruise				×										
13	Poor fuel economy				×		×							×	×	
14	Emissions compliance						×	×		×				×	×	
15	High oil consumption/leakage															
16	Cooling system concerns	Overheating														
17	Cooling system concerns	Runs cold														
18	Exhaust smoke						×							×	×	
19	Fuel odor (in engine compartment)															
20	Engine noise							×			×					
21	Vibration concerns (engine)		×													
22	A/C does not work sufficiently.															
23	A/C is always on or A/C compressor runs continously.															
24	A/C is not cut off under WOT conditions .															
25	Exhaust sulphur smell				×											
26	Intermittent concerns								×		×	×		×	×	×
27	Constant voltage															
28	Automatic transmission (AT) concerns	Upshift/downshift/ engagement	See Section K TROUBLESHOOTING													

XME2010011

Using the symptom troubleshooting

- Symptom troubleshooting shows diagnostic procedures, inspection methods, and proper action to take for each trouble symptom.

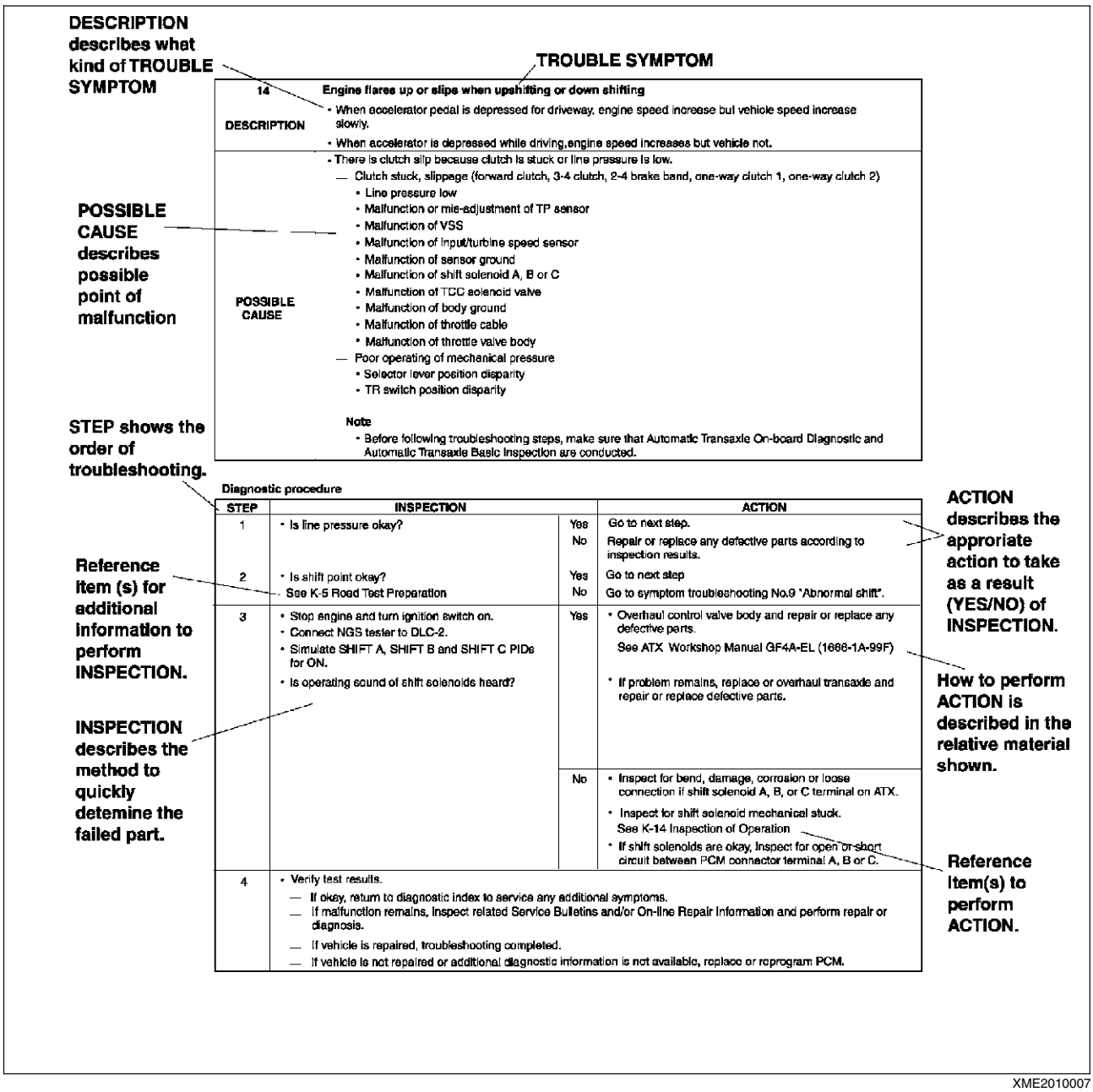

XME2010007

UNITS

UNITS

A6E201200002W01

Electrical current	A (ampere)
Electric power	W (watt)
Electric resistance	Ω (ohm)
Electric voltage	V (volt)
Length	mm (millimeter)
	in (inch)
Negative pressure	kPa (kilo pascal)
	mmHg (millimeters of mercury)
	inHg (inches of mercury)
Positive pressure	kPa (kilo pascal)
	kgf/cm^2 (kilogram force per square centimeter)
	psi (pounds per square inch)
Torque	N·m (Newton meter)
	kgf·m (kilogram force meter)
	kgf·cm (kilogram force centimeter)
	ft·lbf (foot pound force)
	in·lbf (inch pound force)
Volume	L (liter)
	US qt (U.S. quart)
	Imp qt (Imperial quart)
	ml (milliliter)
	cc (cubic centimeter)
	cu in (cubic inch)
	fl oz (fluid ounce)
Weight	g (gram)
	oz (ounce)

Conversion to SI Units (Système International d'Unités)

- All numerical values in this manual are based on SI units. Numbers shown in conventional units are converted from these values.

Rounding Off

- Converted values are rounded off to the same number of places as the SI unit value. For example, if the SI unit value is 17.2 and the value after conversion is 37.84, the converted value will be rounded off to 37.8.

Upper and Lower Limits

- When the data indicates upper and lower limits, the converted values are rounded down if the SI unit value is an upper limit and rounded up if the SI unit value is a lower limit. Therefore, converted values for the same SI unit value may differ after conversion. For example, consider 2.7 kgf/cm^2 in the following specifications:

  210—260 kPa {2.1—2.7 kgf/cm^2, 30—38 psi}
  270—310 kPa {2.7—3.2 kgf/cm^2, 39—45 psi}

- The actual converted values for 2.7 kgf/cm^2 are 264 kPa and 38.4 psi. In the first specification, 2.7 is used as an upper limit, so the converted values are rounded down to 260 and 38. In the second specification, 2.7 is used as a lower limit, so the converted values are rounded up to 270 and 39.

FUNDAMENTAL PROCEDURES

PROTECTION OF VEHICLE

A6E201400004W01

- Always be sure to cover fenders, seats and floor areas before starting work.

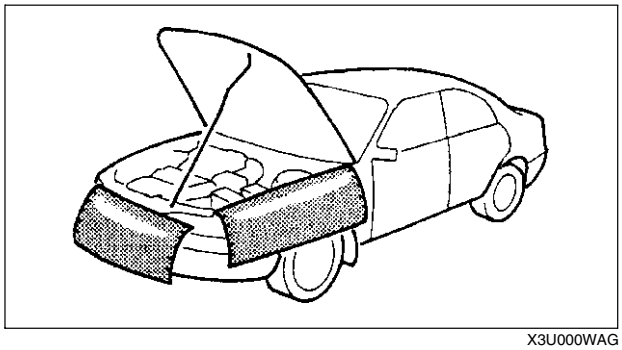

X3U000WAG

PREPARATION OF TOOLS AND MEASURING EQUIPMENT

A6E201400004W02

- Be sure that all necessary tools and measuring equipment are available before starting any work.

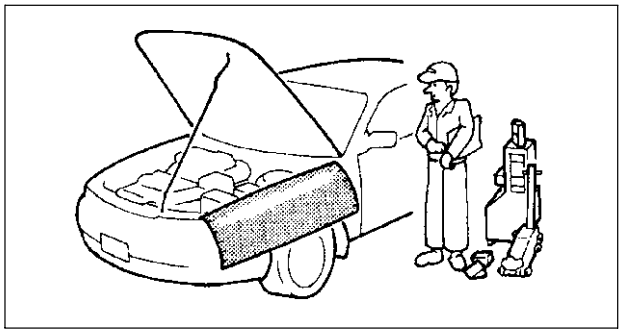

X3U000WAH

SPECIAL SERVICE TOOLS

A6E201400004W03

- Use special service tools or equivalent when they are required.

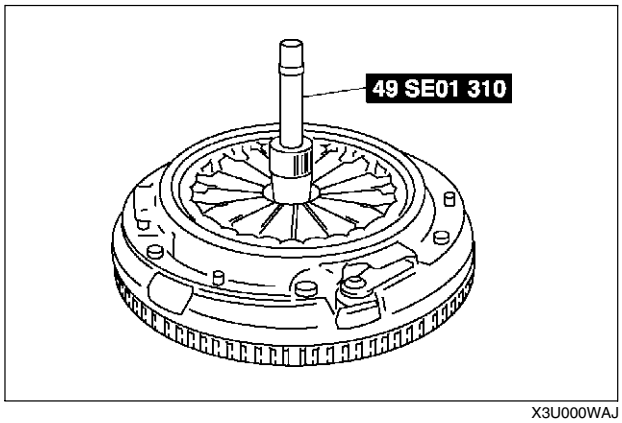

X3U000WAJ

OIL LEAKAGE INSPECTION

A6E201400004W04

- Use either of the following procedures to identify the type of oil that is leaking:

Using UV Light (Black Light)

1. Remove on the engine or transaxle.

   Note
   - Referring to the fluorescent dye instruction manual, mix the specified amount of dye into the engine oil or ATF (or transaxle oil).

2. Pour the fluorescent dye into the engine oil or ATF (or transaxle oil).
3. Allow the engine to run for 30 minutes.
4. Inspect for dye leakage by irradiating with UV light (black light), and identify the type of oil that is leaking.

5. If no dye leakage is found, allow the engine to run for another 30 minutes or drive the vehicle then reinspect.
6. Find where the oil is leaking from, then make necessary repairs.

Note
- To determine whether it is necessary to replace the oil after adding the fluorescent dye, refer to the fluorescent dye instruction manual.

Not Using UV Light (Black Light)

1. Gather some of the leaking oil using an absorbent white tissue.
2. Take samples of engine oil and ATF (or transaxle oil), both from the dipstick, and place them next to the leaked oil already gathered on the tissue.
3. Compare the appearance and smell, and identify the type of oil that is leaking.
4. Remove any oil on the engine or transaxle/ transmission.
5. Allow the engine to run for 30 minutes.
6. Check the area where the oil is leaking, then make necessary repairs.

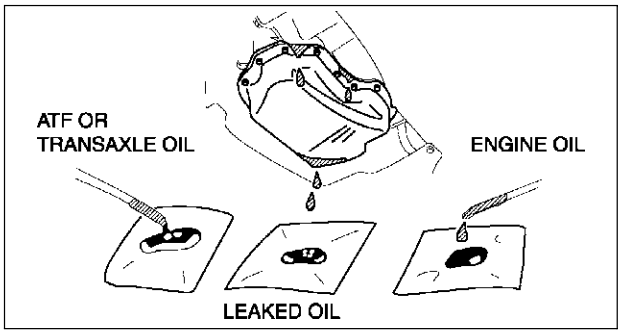

XME2014003

DISCONNECTION OF THE NEGATIVE BATTERY CABLE

A6E201400004W05

- Before beginning any work, turn the ignition switch to LOCK position, then disconnect the negative battery cable and wait for more than 1 minute to allow the backup power supply of the SAS unit to deplete its stored power. Disconnecting the battery cable will delete the memories of the clock, audio, and DTCs, etc. Therefore, it is necessary to verify those memories before disconnecting the cable.
- If the battery had been disconnected during vehicle maintenance or for other reasons, the window will not fully close automatically.Carry out the power window main switch initial setting. (See S–23 INITIAL SETTING.)

REMOVAL OF PARTS

A6E201400004W06

- While correcting a problem, also try to determine its cause. Begin work only after first learning which parts and subassemblies must be removed and disassembled for replacement or repair. After removing the part, plug all holes and ports to prevent foreign material from entering.

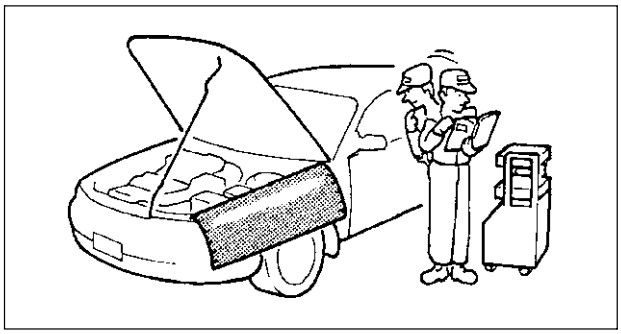
X3U000WAK

DISASSEMBLY

A6E201400004W07

- If the disassembly procedure is complex, requiring many parts to be disassembled, all parts should be marked in a place that will not affect their performance or external appearance and identified so that reassembly can be performed easily and efficiently.

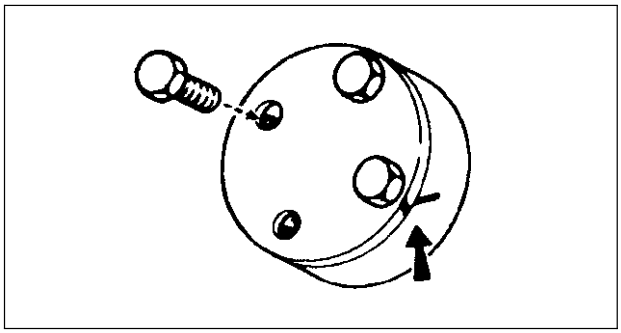
X3U000WAL

INSPECTION DURING REMOVAL, DISASSEMBLY

- When removed, each part should be carefully inspected for malfunction, deformation, damage, and other problems.

A6E201400004W08

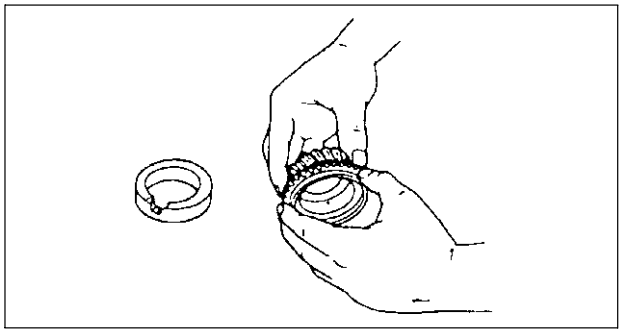

X3U000WAM

ARRANGEMENT OF PARTS

- All disassembled parts should be carefully arranged for reassembly.
- Be sure to separate or otherwise identify the parts to be replaced from those that will be reused.

A6E201400004W09

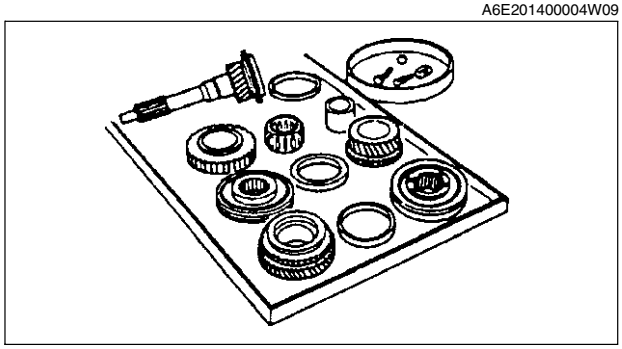

X3U000WAN

CLEANING OF PARTS

- All parts to be reused should be carefully and thoroughly cleaned in the appropriate method.

  Warning
  - **Using compressed air can cause dirt and other particles to fly out causing injury to the eyes. Wear protective eye wear whenever using compressed air.**

A6E201400004W10

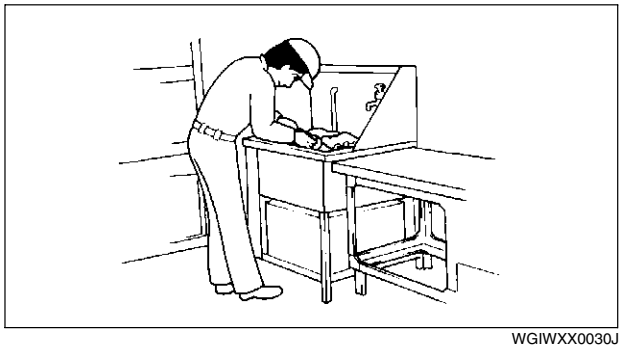

WGIWXX0030J

REASSEMBLY

- Standard values, such as torques and certain adjustments, must be strictly observed in the reassembly of all parts.

A6E201400004W11

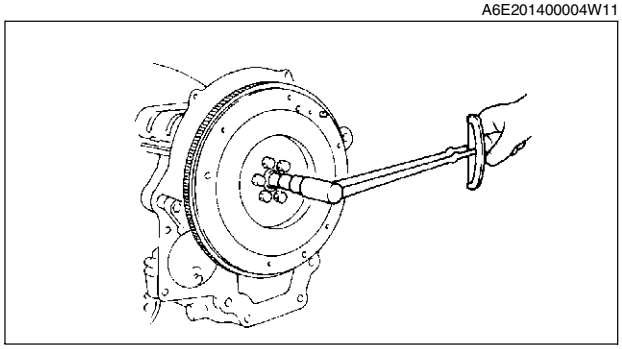

WGIWXX0031J

- If removed, these parts should be replaced with new ones:
  — Oil seals
  — Gaskets
  — O-rings
  — Lockwashers
  — Cotter pins
  — Nylon nuts
- Depending on location:
  — Sealant and gaskets, or both, should be applied to specified locations. When sealant is applied, parts should be installed before sealant hardens to prevent leakage.
  — Oil should be applied to the moving components of parts.
  — Specified oil or grease should be applied at the prescribed locations (such as oil seals) before reassembly.

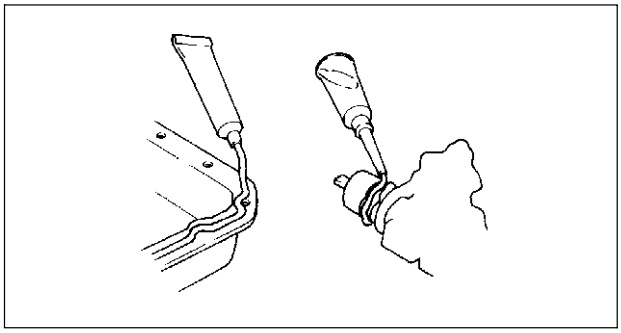

WGIWXX0032J

ADJUSTMENT

- Use suitable gauges and/or testers when making adjustments.

A6E201400004W12

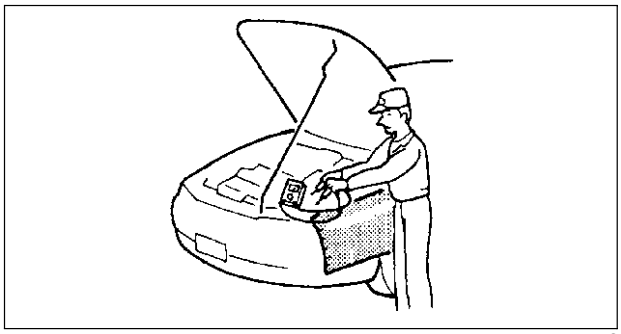

X3U000WAS

RUBBER PARTS AND TUBING

- Prevent gasoline or oil from getting on rubber parts or tubing.

A6E201400004W13

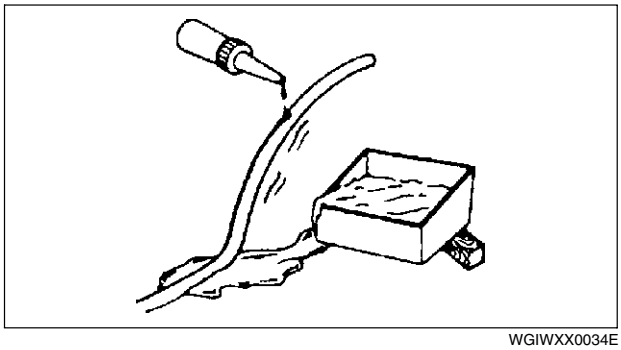

WGIWXX0034E

HOSE CLAMPS

A6E201400004W14

- When reinstalling, position the hose clamp in the original location on the hose and squeeze the clamp lightly with large pliers to ensure a good fit.

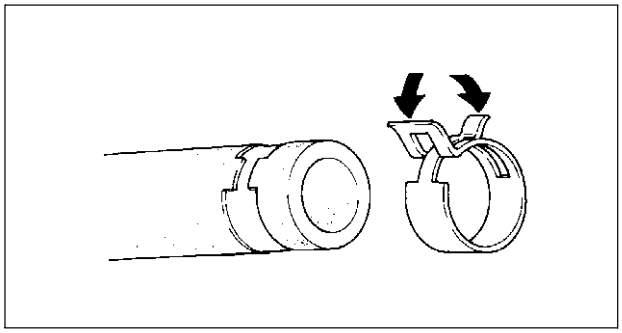

WGIWXX0035J

TORQUE FORMULAS

A6E201400004W19

- When using a torque wrench-**SST** or equivalent combination, the written torque must be recalculated due to the extra length that the **SST** or equivalent adds to the torque wrench. Recalculate the torque using the following formulas. Choose the formula that applies to you.

Torque Unit	Formula
N·m	N·m × [L/(L+A)]
kgf·m	kgf·m × [L/(L+A)]
kgf·cm	kgf·cm × [L/(L+A)]
ft·lbf	ft·lbf × [L/(L+A)]
in·lbf	in·lbf × [L/(L+A)]

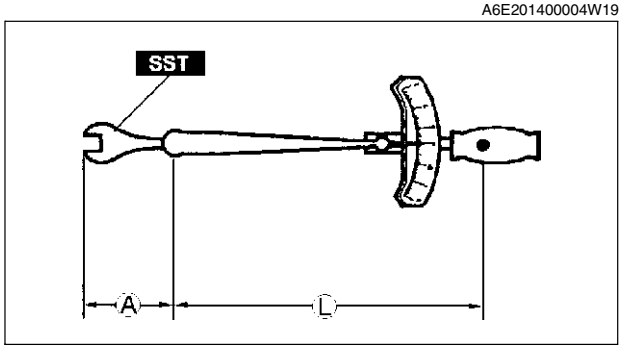

WGIWXX0036E

A : The length of the **SST** past the torque wrench drive
L : The length of the torque wrench

VISE

A6E201400004W16

- When using a vise, put protective plates in the jaws of the vise to prevent damage to parts.

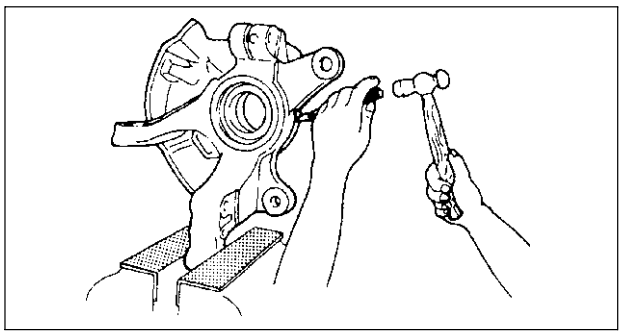

X3U000WAW

DYNAMOMETER

A6E201400004W17

- When inspecting and servicing the power train on the dynamometer or speed meter tester, pay attention to the following:
  - — Place a fan, preferably a vehicle-speed proportional type, in front of the vehicle.
  - — Make sure the vehicle is in a facility with an exhaust gas ventilation system.
  - — Since the rear bumper might deform from the heat, cool the rear with a fan. (Surface of the bumper must be below **70 degrees**.)
  - — Keep the area around the vehicle uncluttered so that heat does not build up.
  - — Watch the water temperature gauge and don't overheat the engine.
  - — Avoid added load to the engine and maintain normal driving conditions as much as possible.

Note

- When only the front wheels are being rotated on the dynamometer, the ABS warning light could illuminate. If the ABS warning light illuminates, turn the ignition switch to the LOCK position, then turn it back to the ON position, run the vehicle at **10km/h** and check that the ABS warning light goes off. (In this case, a DTC will be stored in the memory. To delete this data from the memory, follow the procedure for deleting DTCs (ABS) from memory.) (See P–6 PRECAUTION (BRAKES)) to turn off the warning light.)

SST

A6E201400004W18

- Some Ford **SST** or equivalent are used as **SSTs** necessary for engine repair. Note that these **SSTs** are marked with Ford **SST** numbers.
- Note that a Ford **SST** number is written together with a corresponding Mazda **SST** number as shown below.

Example (section ST)

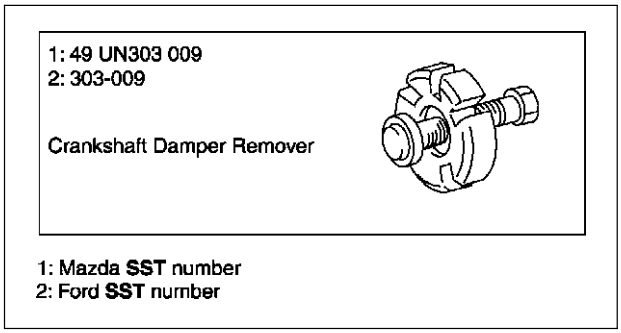

XME2014002

Example (except section ST)

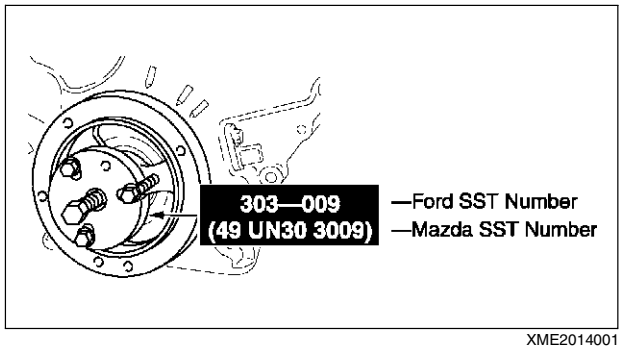

XME2014001

INSTALLATION OF RADIO SYSTEM

INSTALLATION OF RADIO SYSTEM

A6E201600005W01

If a radio system is installed improperly or if a high-powered type is used, the CIS and other systems may be affected. When the vehicle is to be equipped with a radio, observe the following precautions:

- Install the antenna at the farthest point from control modules.
- Install the antenna feeder as far as possible from the control module harnesses.
- Ensure that the antenna and feeder are properly adjusted.
- Do not install a high-powered radio system.

ELECTRICAL SYSTEM

ELECTRICAL PARTS

A6E201700006W01

Battery cable

- Before disconnecting connectors or removing electrical parts, disconnect the negative battery cable.

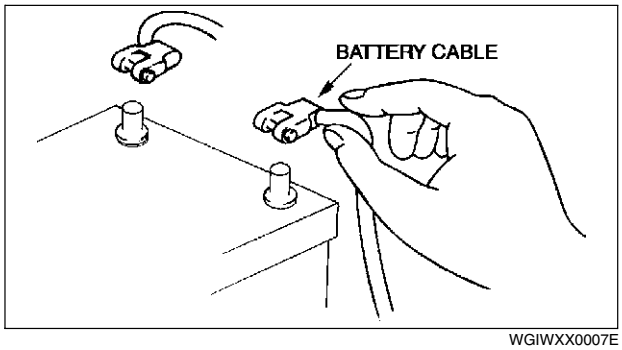

WGIWXX0007E

Wiring Harness

- To remove the wiring harness from the clip in the engine room, pry up the hook of the clip using a flathead screwdriver.

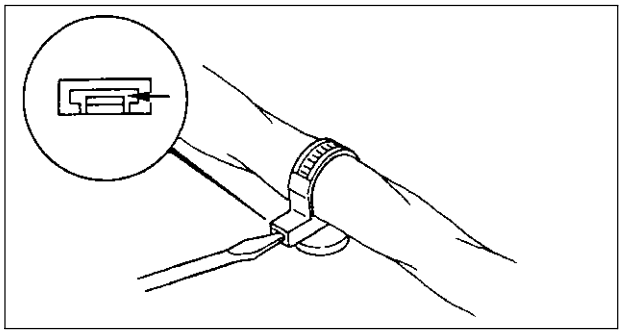

X3U000WBU

CONNECTORS

A6E201700006W02

Data link connector

- Insert the probe into the terminal when connecting a jumper wire to the data link connector.

Caution

- **Inserting a jumper wire probe into the data link connector terminal may damage the terminal.**

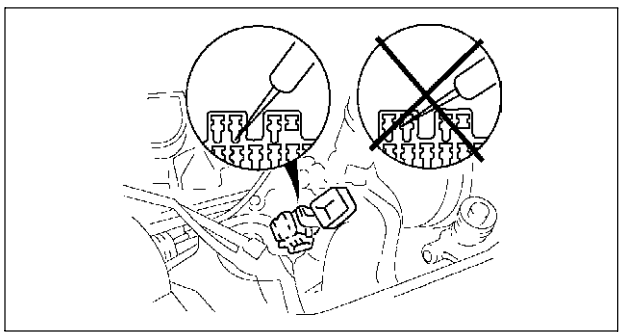

X3U000WAY

Disconnecting connectors

- When disconnecting connector, grasp the connectors, not the wires.

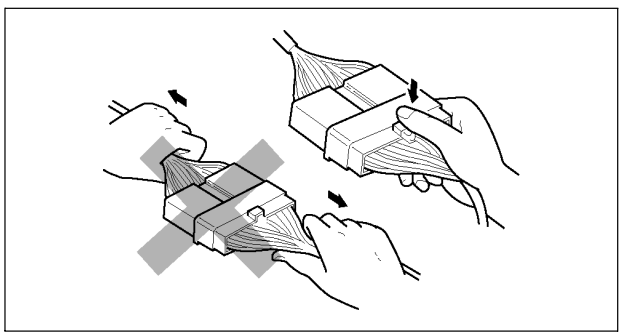

WGIWXX0041E

- Connectors can be disconnected by pressing or pulling the lock lever as shown.

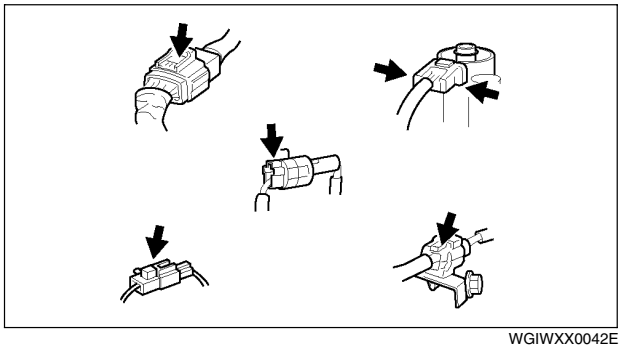

WGIWXX0042E

Locking connector

- When locking connectors, listen for a click indicating they are securely locked.

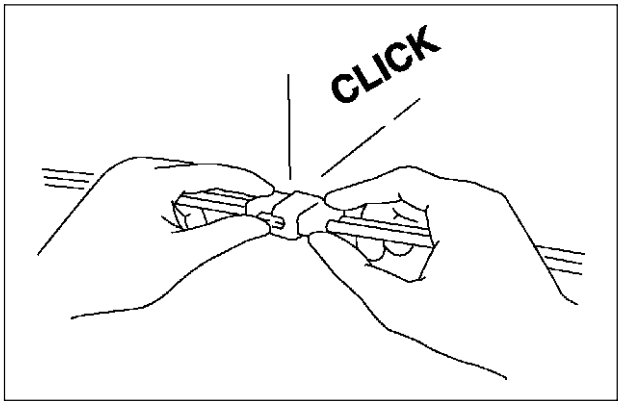

X3U000WB1

Inspection

- When a tester is used to inspect for continuity or measuring voltage, insert the tester probe from the wiring harness side.

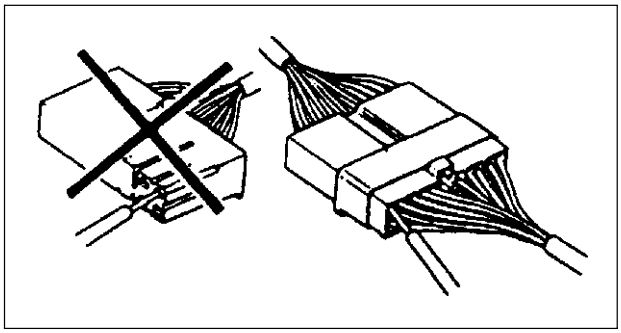

X3U000WB2

- Inspect the terminals of waterproof connectors from the connector side since they cannot be accessed from the wiring harness side.

  Caution
  - **To prevent damage to the terminal, wrap a thin wire around the tester probe before inserting into terminal.**

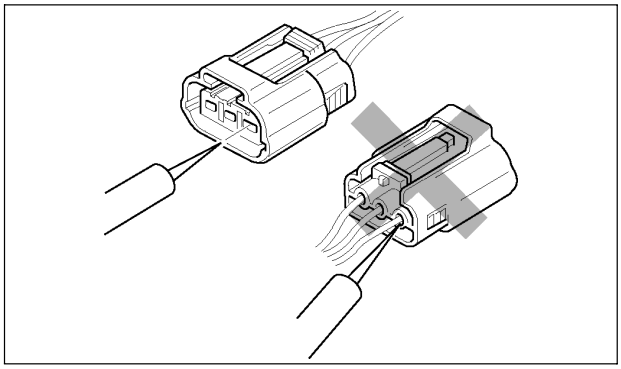

WGIWXX0045E

Terminals
Inspection

- Pull lightly on individual wires to verify that they are secured in the terminal.

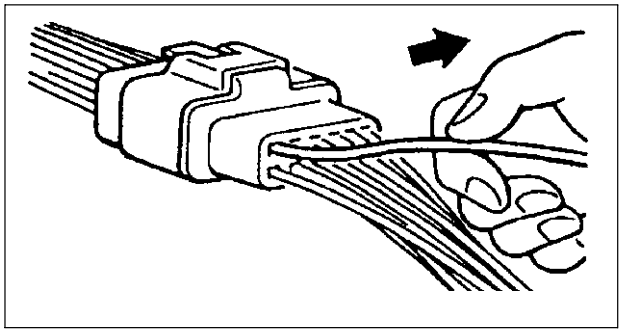

X3U000WB4

Replacement

- Use the appropriate tools to remove a terminal as shown. When installing a terminal, be sure to insert it until it locks securely.
- Insert a thin piece of metal from the terminal side of the connector and with the terminal locking tab pressed down, pull the terminal out from the connector.

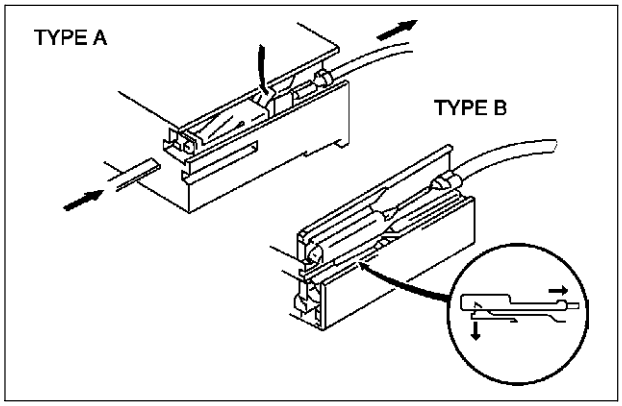

X3U000WB5

Sensors, Switches, and Relays

- Handle sensors, switches, and relays carefully. Do not drop them or strike them against other objects.

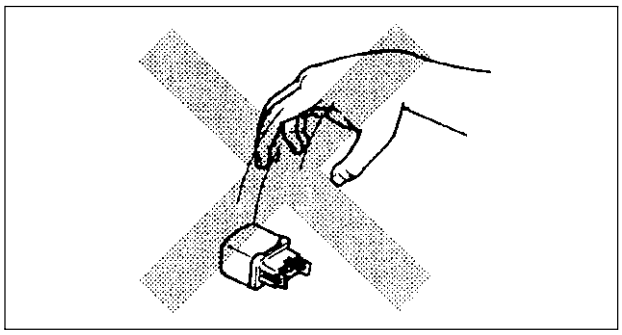

X3U000WB6

Wiring Harness
Wiring color codes

- Two-color wires are indicated by a two-color code symbol.
- The first letter indicates the base color of the wire and the second the color of the stripe.

CODE	COLOR	CODE	COLOR
B	Black	O	Orange
BR	Brown	P	Pink
G	Green	R	Red
GY	Gray	V	Violet
L	Blue	W	White
LB	Light Blue	Y	Yellow
LG	Light Green		

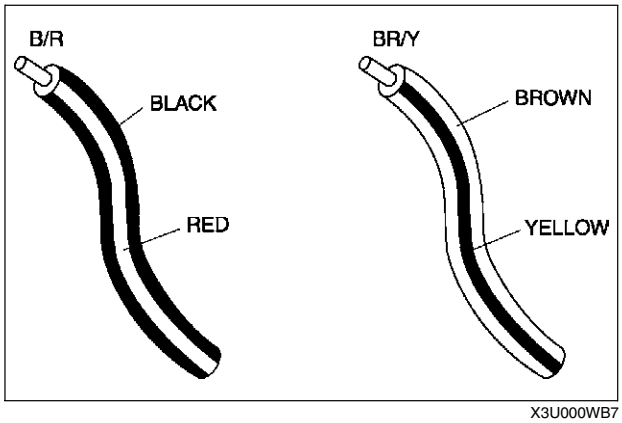

X3U000WB7

Fuse
Replacement

- When replacing a fuse, be sure to replace it with one of the same capacity. If a fuse fails again, the circuit probably has a short and the wiring should be inspected.
- Be sure the negative battery terminal is disconnected before replacing a main fuse.

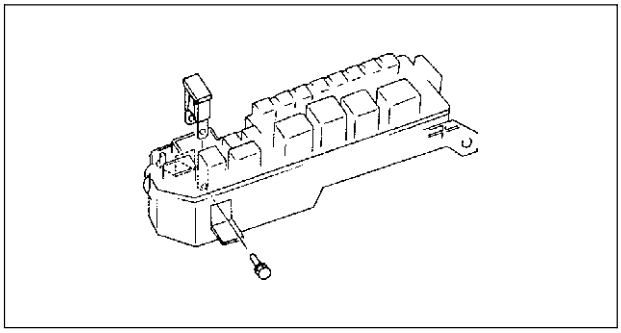

YMU000WA1

- When replacing a pullout fuse, use the fuse puller.

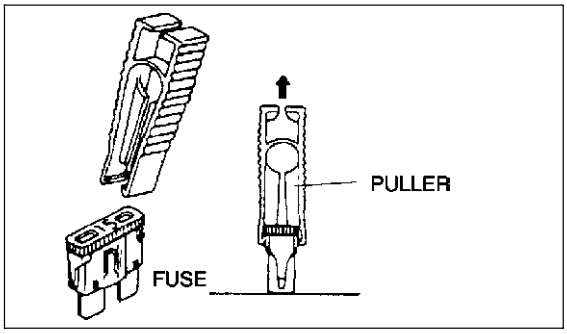

YMU000WAK

Direction of View for Connector
Part-side connector

Direction of view is from the terminal side.

* : Part names are shown only when there are multiple connector drawings.

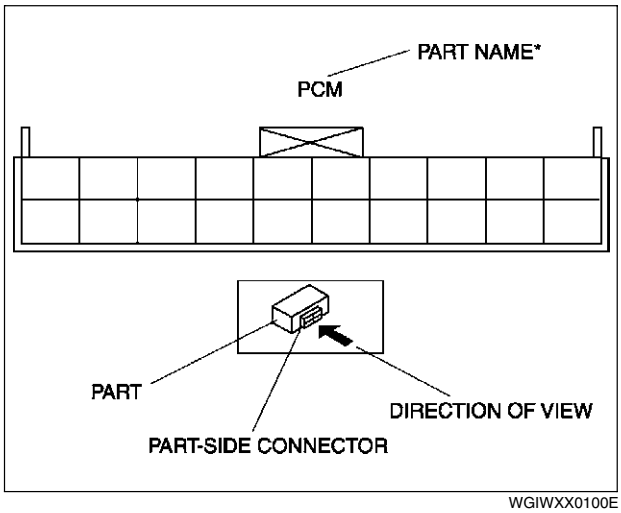

WGIWXX0100E

Vehicle-harness-side connector
Direction of view is from the harness side.

* : Part names are shown only when there are multiple connector drawings.

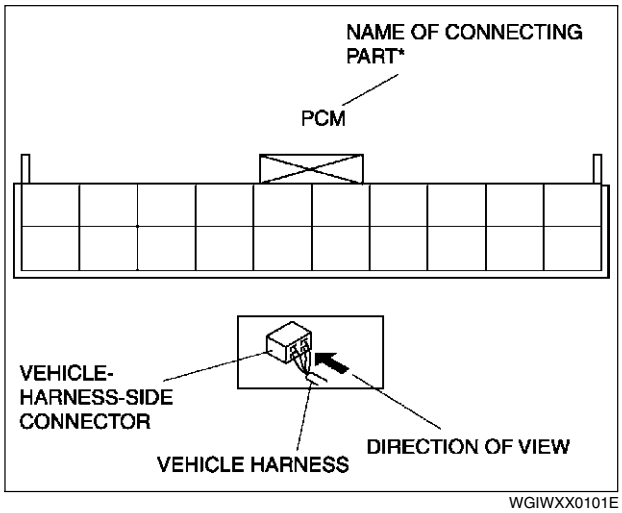

WGIWXX0101E

Other
Because vehicle-harness-side connectors, such as the DLC 2, have to be viewed from the terminal side, the direction of view is from the terminal side.

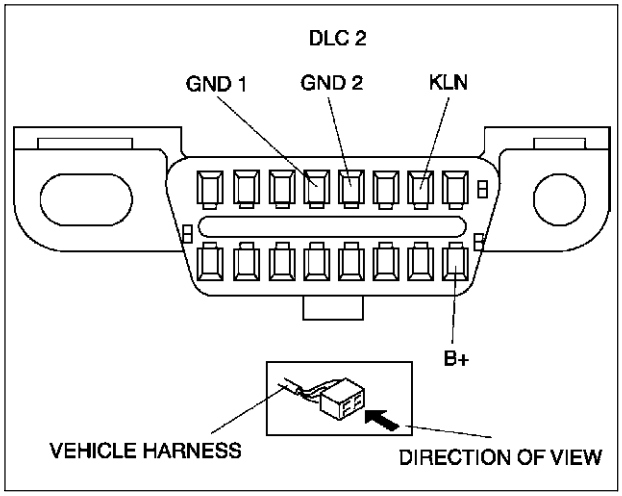

WGIWXX0102E

ELECTRICAL TROUBLESHOOTING TOOLS

A6E201700006W03

Jumper wire

- A jumper wire is used to create a temporary circuit. Connect the jumper wire between the terminals of a circuit to bypass a switch.

Caution

- **Do not connect a jumper wire from the power source line to a body ground. This may cause burning or other damage to wiring harnesses or electronic components.**

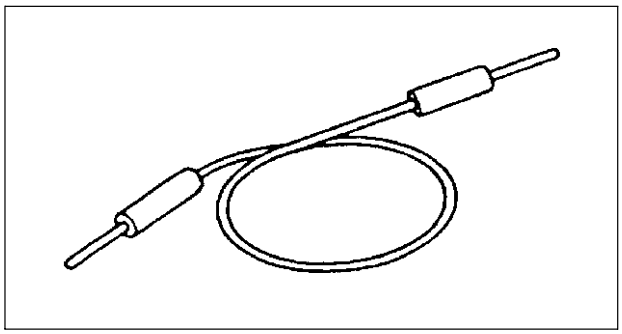

X3U000WBB

Voltmeter

- The DC voltmeter is used to measure circuit voltage. A voltmeter with a range of **15 V or more** is used by connecting the positive (+) probe (red lead wire) to the point where voltage will be measured and the negative (-) probe (black lead wire) to a body ground.

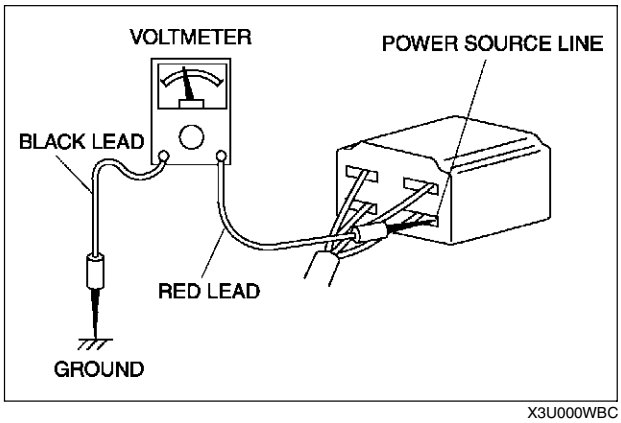

X3U000WBC

Ohmmeter

- The ohmmeter is used to measure the resistance between two points in a circuit and to inspect for continuity and short circuits.

  Caution
  - **Do not connect the ohmmeter to any circuit where voltage is applied. This will damage the ohmmeter.**

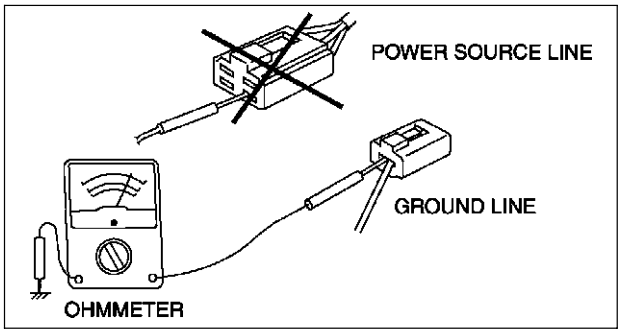

YMU000WAL

PRECAUTIONS BEFORE WELDING

A6E201700006W04

Vehicles have various electrical parts. To protect the parts from excessive current generated when welding, be sure to perform the following procedure.

1. Turn the ignition switch to the LOCK position.
2. Disconnect the battery cables.

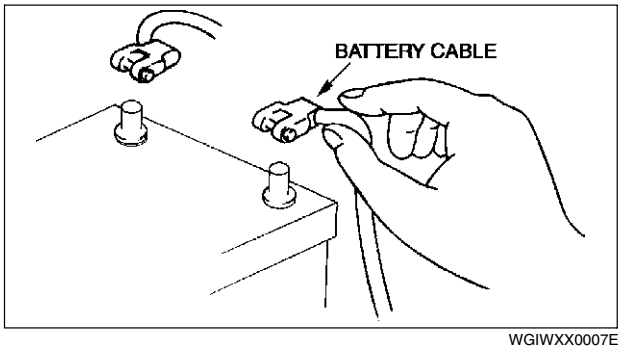

WGIWXX0007E

3. Securely connect the welding machine to the ground near the welding area.
4. Cover the peripheral parts of the welding area to protect them from weld spatter.

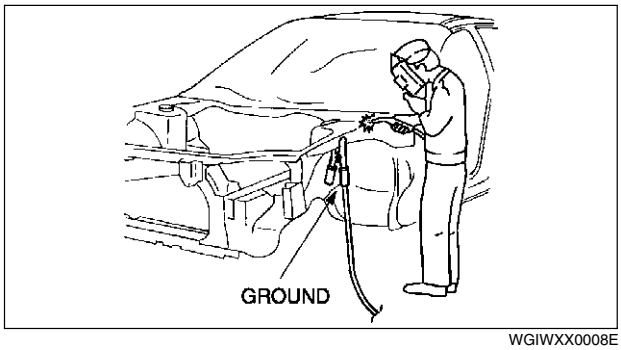

WGIWXX0008E

JACKING POSITIONS ,VEHICLE LIFT (2 SUPPORTS), SAFETY STANDS (RIGID RACK) POSITIONS

JACKING POSITIONS, VEHICLE LIFT (2 SUPPORTS) AND SAFETY STAND (RIGID RACK) POSITIONS

A6E202200019W01

Jacking Positions

Warning
- **Improperly jacking a vehicle is dangerous. The vehicle can slip off the jack and cause serious injury. Use only the correct front and rear jacking points and block the wheels.**

- Use safety stands to support the vehicle after it has been lifted.

Front
- At the jacking plate of the engine support member.

Rear
- At the center of torsion beam axle.

Vehicle Lift Positions

Front and rear

Warning
- **Unstably lifting a vehicle is dangerous. The vehicle can slip off the lift and cause serious injury and/or vehicle damage. Make sure that the vehicle is on the lift horizontally by adjusting the height of support at the end of the arm of the lift.**

Safety Stand Positions

Front
- Both sides of the vehicle, on side sills.

Rear
- Both sides of the vehicle, on side sills.

JACKING POSITIONS ,VEHICLE LIFT (2 SUPPORTS), SAFETY STANDS (RIGID

Jacking positions, vehicle lift (2 supports) and safety stand (rigid rack) positions view

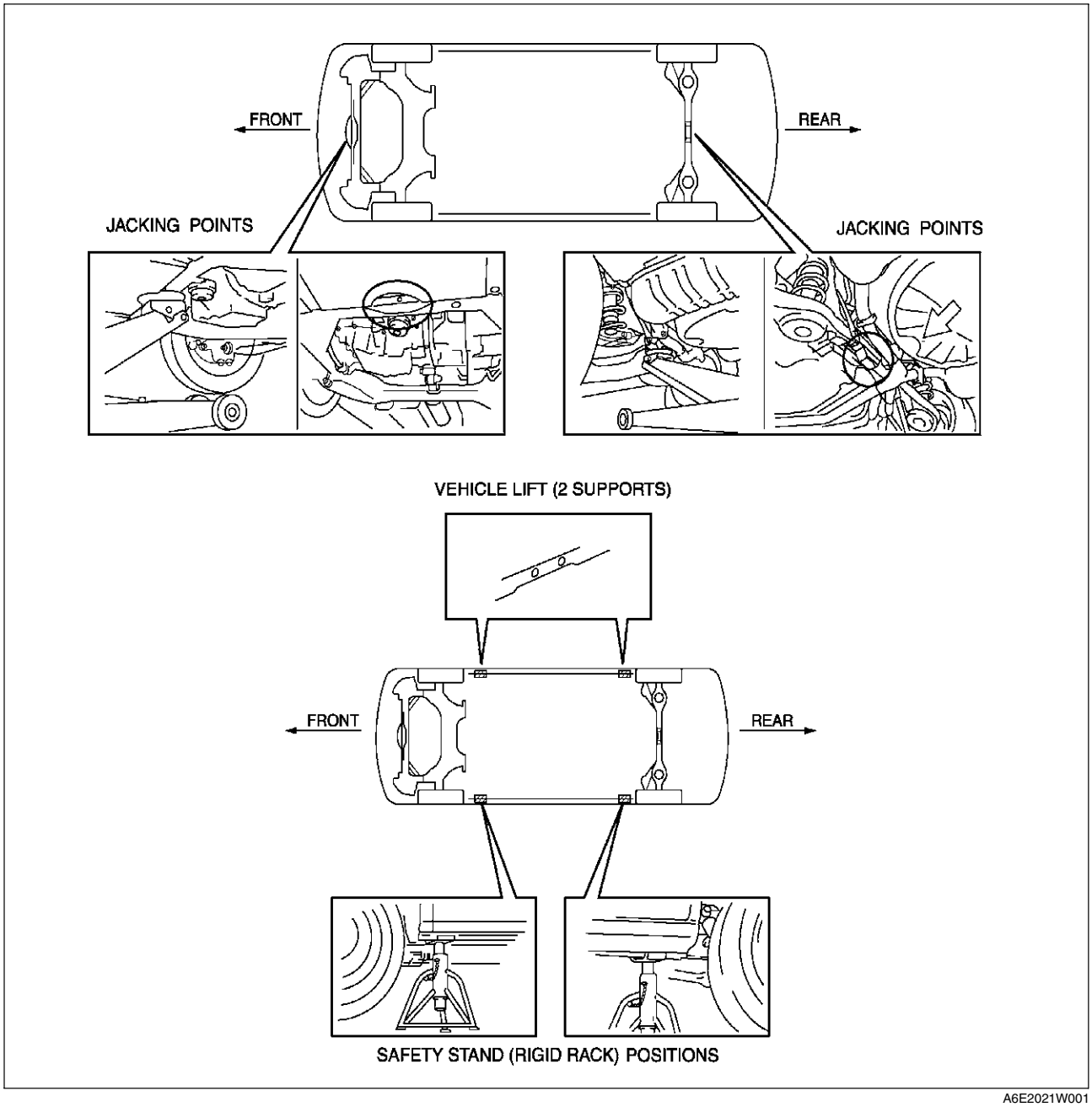

A6E2021W001

TOWING

TOWING

A6E202400009W01

- Proper lifting and towing are necessary to prevent damage to the vehicle. Government and local laws must be followed.
- A towed vehicle should have its front wheels off the ground. If excessive damage or other conditions prevent this, use wheel dollies.
- When towing with the rear wheels on the ground, release the parking brake.

Caution

- **Do not tow the vehicle backward with driving wheels on the ground. This may cause internal damage to the transaxle.**

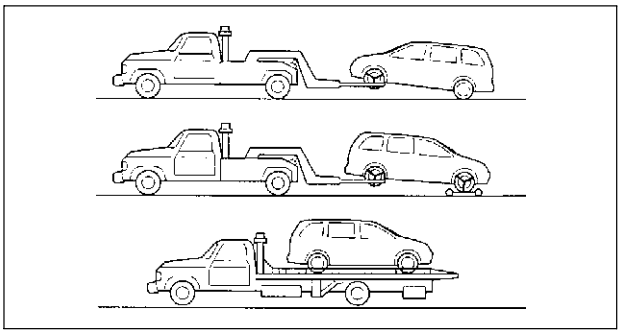

YMU000WA3

Caution

- **Do not tow with sling-type equipment. This could damage your vehicle. Use wheel-lift or flatbed equipment.**

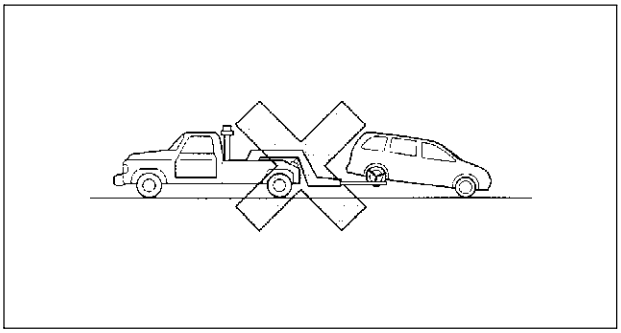

YMU000WA4

Caution

- **Do not use the hook loops under the front and rear for towing. They are designed ONLY for tying down the vehicle when it is being transported. Using them for towing will damage the bumper.**

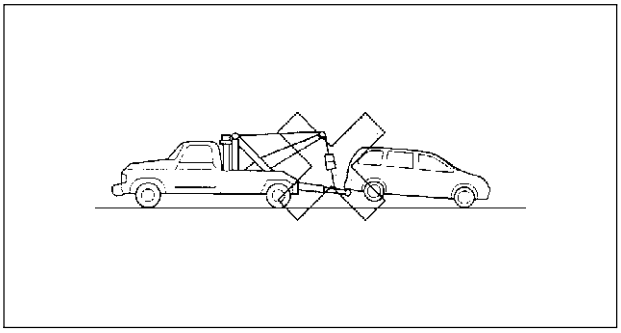

YMU000WA5

TOWING HOOKS

A6E202400009W02

Caution

- **The towing hooks should be used only in an emergency (to get the vehicle out of a ditch or a snow bank, for example).**
- **When using the towing hooks, always pull the cable or chain in a straight direction with respect to the hook. Apply no sideways force.**

FRONT

1. Remove the towing eyelet and the lug wrench from the trunk.
2. Wrap a screwdriver or similar tool with a soft cloth to prevent damage to the painted bumper and open the cap located on the front bumper, below the left headlight.

Caution

- **The cap cannot be completely removed. Do not use excessive force as it may damage the cap or scratch the painted bumper surface.**

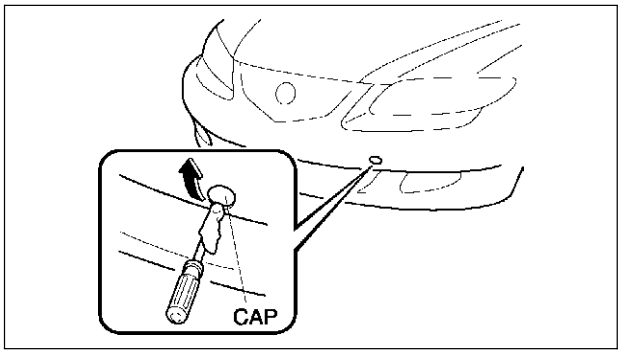

A6E2024W004

3. Securely install the towing eyelet using the lug wrench.
4. Hook the towing rope to the towing eyelet.

Caution

- **If the towing eyelet is not securely tightened, it may loosen or disengage from the bumper when towing the vehicle. Make sure that the towing eyelet is securely tightened to the bumper.**

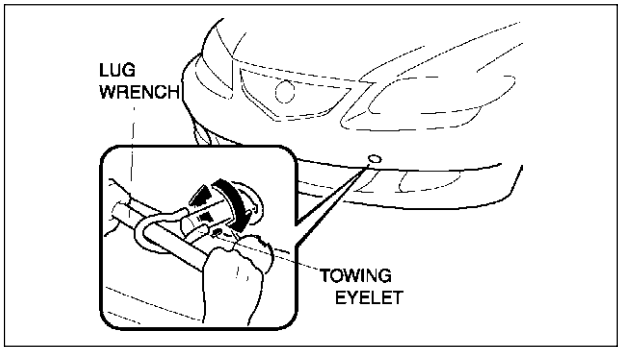

A6E2024W002

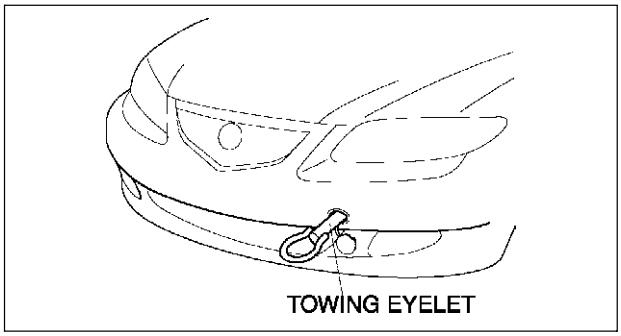

A6E2024W003

REAR

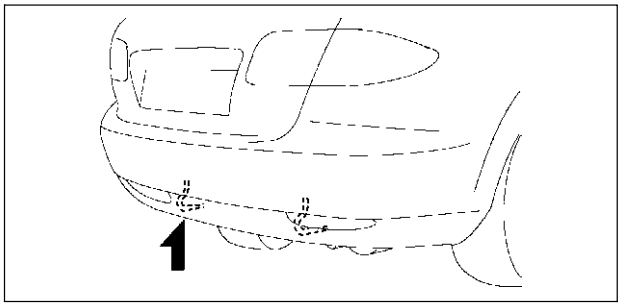

A6E2024W001

IDENTIFICATION NUMBER LOCATIONS

VEHICLE IDENTIFICATION NUMBER(VIN)

A6E202600010W01

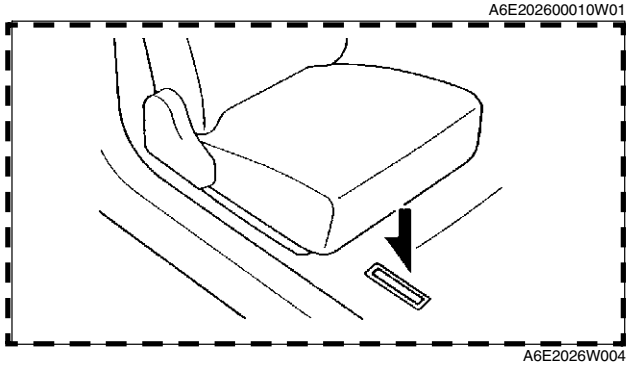

A6E2026W004

ENGINE IDENTIFICATION NUMBER

A6E202600010W02

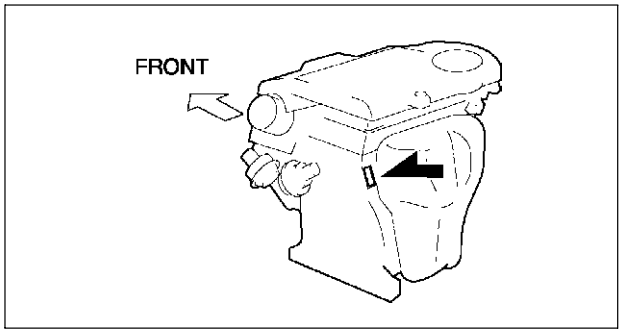

A6E2026W001

NEW STANDARDS

NEW STANDARDS

A6E202800020W01

- Following is a comparison of the previous standard and the new standard.

New Standard		Previous Standard		Remark
Abbreviation	Name	Abbreviation	Name	
AP	Accelerator Pedal	—	Accelerator Pedal	
ACL	Air Cleaner	—	Air Cleaner	
A/C	Air Conditioning	—	Air Conditioning	
BARO	Barometric Pressure	—	Atmospheric Pressure	
B+	Battery Positive Voltage	Vb	Battery Voltage	
—	Brake Switch	—	Stoplight Switch	
—	Calibration Resistor	—	Corrected Resistance	#6
CMP sensor	Camshaft Position Sensor	—	Crank Angle Sensor	
CAC	Charge Air Cooler	—	Intercooler	
CLS	Closed Loop System	—	Feedback System	
CTP	Closed Throttle Position	—	Fully Closed	
CPP	Clutch Pedal Position	—	Idle Switch	
CIS	Continuous Fuel Injection System	—	Clutch Position	
CS sensor	Control Sleeve Sensor	CSP sensor	Control Sleeve Position Sensor	#6
CKP sensor	Crankshaft Position Sensor	—	Crank Angle Sensor 2	
DLC	Data Link Connector	—	Diagnosis Connector	
DTM	Diagnostic Test Mode	—	Test Mode	#1
DTC	Diagnostic Trouble Code(s)	—	Service Code(s)	
DI	Distributor Ignition	—	Spark Ignition	
DLI	Distributorless Ignition	—	Direct Ignition	
EI	Electronic Ignition	—	Electronic Spark Ignition	#2
ECT	Engine Coolant Temperature	—	Water Thermo	
EM	Engine Modification	—	Engine Modification	
—	Engine Speed Input Signal	—	Engine RPM Signal	
EVAP	Evaporative Emission	—	Evaporative Emission	
EGR	Exhaust Gas Recirculation	—	Exhaust Gas Recirculation	
FC	Fan Control	—	Fan Control	
FF	Flexible Fuel	—	Flexible Fuel	
4GR	Fourth Gear	—	Overdrive	
—	Fuel Pump Relay	—	Circuit Opening Relay	#3
FSO solenoid	Fuel Shut Off Solenoid	FCV	Fuel Cut Valve	#6
GEN	Generator	—	Alternator	
GND	Ground	—	Ground/Earth	
HO2S	Heated Oxygen Sensor	—	Oxygen Sensor	With heater
IAC	Idle Air control	—	Idle Speed Control	
—	IDM Relay	—	Spill Valve Relay	#6
—	Incorrect Gear Ratio	—	—	
—	Injection Pump	FIP	Fuel Injection Pump	#6
—	Input/Turbine Speed Sensor	—	Pulse Generator	
IAT	Intake Air Temperature	—	Intake Air Thermo	
KS	Knock Sensor	—	Knock Sensor	
MIL	Malfunction Indicator Lamp	—	Malfunction Indicator Light	
MAP	Manifold Absolute Pressure	—	Intake Air Pressure	
MAF sensor	Mass Air Flow Sensor	—	Airflow Sensor	
MFL	Multiport Fuel Injection	—	Multiport Fuel Injection	
OBD	On-Board Diagnostic	—	Diagnosis/SelfDiagnosis	
OL	Open Loop	—	Open Loop	

New Standard		Previous Standard		Remark
Abbreviation	Name	Abbreviation	Name	
—	Output Speed Sensor	—	Vehicle Speed Sensor 1	
OC	Oxidation Catalytic Converter	—	Catalytic Converter	
O2S	Oxygen Sensor	—	Oxygen Sensor	
PNP	Park/Neutral Position	—	Park/Neutral Range	
—	PCM Control Relay	—	Main Relay	#6
PSP	Power Steering Pressure	—	Power Steering Pressure	
PCM	Powertrain Control Module	ECU	Engine Control Unit	#4
—	Pressure Control Solenoid	—	Line Pressure Solenoid Valve	
PAIR	Pulsed Secondary Air Injection	—	Secondary Air Injection System	Pulsed injection
—	Pump Speed Sensor	—	NE Sensor	#6
AIR	Secondary Air Injection	—	Secondary Air Injection System	Injection with air pump
SAPV	Secondary Air Pulse Valve	—	Reed Valve	
SFI	Sequential Multipoint Fuel Injection	—	Sequential Fuel Injection	
—	Shift Solenoid A	—	12 Shift Solenoid Valve	
		—	Shift A Solenoid Valve	
—	Shift Solenoid B	—	23 Shift Solenoid Valve	
		—	Shift B Solenoid Valve	
—	Shift Solenoid C	—	34 Shift Solenoid Valve	
3GR	Third Gear	—	3rd Gear	
TWC	Three Way Catalytic Converter	—	Catalytic Converter	
TB	Throttle Body	—	Throttle Body	
TP sensor	Throttle Position Sensor	—	Throttle Sensor	
TCV	Timer Control Valve	TCV	Timing Control Valve	#6
TCC	Torque Converter Clutch	—	Lockup Position	
TCM	Transmission (Transaxle) Control Module	—	ECAT Control Unit	
—	Transmission (Transaxle) Fluid Temperature Sensor	—	ATF Thermosensor	
TR	Transmission (Transaxle) Range	—	Inhibitor Position	
TC	Turbocharger	—	Turbocharger	
VSS	Vehicle Speed Sensor	—	Vehicle Speed Sensor	
VR	Voltage Regulator	—	IC Regulator	
VAF sensor	Volume Air Flow Sensor	—	Air flow Sensor	
WUTWC	Warm Up Three Way Catalytic Converter	—	Catalytic Converter	#5
WOT	Wide Open Throttle	—	Fully Open	

#1 : Diagnostic trouble codes depend on the diagnostic test mode
#2 : Controlled by the PCM
#3 : In some models, there is a fuel pump relay that controls pump speed. That relay is now called the fuel pump relay (speed).
#4 : Device that controls engine and powertrain
#5 : Directly connected to exhaust manifold
#6 : Part name of diesel engine

ABBREVIATIONS

ABBREVIATIONS

A6E203000011W01

A/C	Air conditioner
ABS	Antilock brake system
ACC	Accessories
ALR	Automatic locking retractor
ATF	Automatic transaxle fluid
ATX	Automatic transaxle
CAN	Controller area network
CM	Control module
DIS	Drive information system
DSC	Dynamic stability control
ELR	Emergency locking retractor
ESA	Electronic spark advance
EX	Exhaust
GPS	Global positioning system
HI	High
IAC	Idle air control
IG	Ignition
IN	Intake
INT	Intermittent
KOEO	Key on engine off
KOER	Key off engine running
LCD	Liquid crystal display
LED	Light emitting diode
LF	Left front
LH	Left hand
L.H.D.	Left hand drive
LO	Low
LR	Left rear
M	Motor
MAX	Maximum
MTX	Manual transaxle
O/D	Overdrive
OCV	Oil control valve
OFF	Switch off
ON	Switch on
P/S	Power steering
P/W CM	Power window control module
PATS	Passive anti-theft system
PCV	Positive crankcase ventilation
PID	Parameter identification
REC	Recirculate
RF	Right front
RH	Right hand
R.H.D.	Right hand drive
RR	Right rear
SAS	Sophisticated air bag sensor
SST	Special service tool
SW	Switch
TDC	Top dead center
TFT	Transaxle fluid temperature
TNS	Tail number side lights
TP	Throttle position
TR	Transaxle range
TWC	Three way catalytic converter
VAD	Variable air duct
VIS	Variable intake-air system
VTCS	Variable tumble control system
VVT	Variable valve timing
WDS	Worldwide diagnostic system
4SD	4 door sedan
5HB	5 door hatchback

PRE-DELIVERY INSPECTION

PRE-DELIVERY INSPECTION

A6E203200012W01

PRE-DELIVERY INSPECTION TABLE

EXTERIOR

- **INSPECT** and **ADJUST**, if necessary, the following items to specification:

❑Glass, exterior bright metal and paint for damage
❑All weatherstrips for damage or detachment
❑Door operation and alignment including side door and back door
❑Wheel lug nuts
❑Tire pressures
❑Headlight aiming
❑Headlight cleaner and fluid level (if equipped)
❑Operation of bonnet release and lock
❑Operation of liftgate and fuel lid opener

- **INSTALL** the following parts:

❑Flap (front and rear)
❑Wheel caps or rings (if equipped)

UNDER BONNET—ENGINE OFF

- **INSPECT** and **ADJUST**, if necessary, the following items to specification:

❑Fuel, engine coolant, and hydraulic lines, fittings, connections, and components for leaks
❑Accelerator cable and linkage for free movement
❑Tension of drive belts
❑Tightness of water hose clamps
❑Tightness of battery terminals, electrolyte level and specific gravity
❑Radiator coolant level and specific gravity
❑Engine oil level
❑Oil level in steering gearbox
❑Windshield washer tank fluid level
❑Brake master cylinder fluid level
❑Clutch master cylinder fluid level (MTX only)
❑Power steering fluid level
❑Manual transaxle oil level (MTX only)

CLEAN the spark plugs

INTERIOR

- **INSTALL** the following parts:

❑Fuse for accessories

- **CHECK** the operations of the following items:

❑All lights including warning, and indicator lights
❑Cigarette lighter and clock
❑Ignition switch and steering lock
❑Transaxle range switch (ATX only)
❑Warning buzzers
❑Seat belts warning system
❑Ignition key reminder alarm
❑Seat controls (sliding and reclining) and headrests
❑Seat belt warning system
❑Door locks, including childproof door locks
❑Power door lock
❑Power windows (if equipped)
❑Horn, wipers, and washers
❑Wiper blades performance

Clean the wiper blades and windshield, if necessary

❑Antenna

- **CHECK** the following items:

❑Presence of spare fuse
❑Upholstery and interior finish

- **CHECK** and **ADJUST**, if necessary, the following items:

❑Operation and fit of windows
❑Parking brake
❑Pedal height and free play of brake pedal

UNDER BONNET—ENGINE RUNNING AT OPERATING TEMPERATURE

- CHECK the following items:

❑Operation of idle-up system for electrical load, air conditioner
❑Idle speed
❑Automatic transaxle fluid level (ATX only)
❑Initial ignition timing
❑Operation of throttle position sensor
❑Operation of EGR valve

ON HOIST

- CHECK the following items:

❑Underside fuel, coolant and hydraulic lines, fittings, connections, and components for leaks
❑Tires for cuts or bruises
❑Steering linkage, suspension, exhaust system, and all underside hardware for looseness or damage

ROAD TEST

- **CHECK** the following items:

❑Brake operation
❑Clutch operation
❑Steering control
❑Operation of meters and gauges, squeaks, rattles, and abnormal noises
❑Engine general performance
❑Emergency locking retractors

AFTER ROAD TEST

- **REMOVE** the seat and floor mat protective covers **CHECK** for the necessary owner information materials, tools, and spare tire in vehicle

SCHEDULED MAINTENANCE

SCHEDULED MAINTENANCE TABLE

A6E203400013W01

For Europe (L.H.D. U.K.)
Chart symbols:

I : Inspect and repair, clean, adjust, or replace if necessary. (Oil-permeated air cleaner elements cannot be cleaned using the air-blow method.)
R : Replace
T : Tighten
L : Lubricate

Remarks:

- To ensure efficient operation of the engine and all systems related to emission control, the ignition and fuel systems must be serviced regularly. It is strongly recommended that all servicing related to these systems be done by an authorized Mazda Dealer.
- After the described period, continue to follow the described maintenance at the recommended intervals.
- Refer below for a description of items marked* in the maintenance chart.

*1: Also inspect and adjust the power steering and air conditioner drive belts, if installed.

*2: If the vehicle is operated under any of the following conditions, change the engine oil and oil filter every 10,000 km (6,250 miles) or shorter.

a. Driving in dusty conditions.
b. Extended periods of idling or low speed operation.
c. Driving for long period in cold temperatures or driving regularly at short distance only.

*3: If the vehicle is operated in very dusty or sandy areas, clean and if necessary, replace the air cleaner element more often than the recommended intervals.

*4: If the brakes are used extensively (for example, continuous hard driving or mountain driving) or if the vehicle is operated in extremely humid climates, change the brake fluid annually.

Maintenance Item	Maintenance Interval (Number of months or km (miles), whichever comes first)								
Months	**12**	**24**	**36**	**48**	**60**	**72**	**84**	**96**	**108**
×1000 km	**20**	**40**	**60**	**80**	**100**	**120**	**140**	**160**	**180**
×1000 miles	**12.5**	**25**	**37.5**	**50**	**62.5**	**75**	**87.5**	**100**	**112.5**
ENGINE									
Drive belts *1			I			I			I
Engine oil *2	R	R	R	R	R	R	R	R	R
Oil filter *2	R	R	R	R	R	R	R	R	R
COOLING SYSTEM									
Cooling system (including coolant level adjustment)		I		I		I		I	
Engine coolant	Replace at first 4 years or 100,000 km (62,500 miles); after that, every 2 years								
FUEL SYSTEM									
Air cleaner element *3			R			R			R
Fuel lines & hoses		I		I		I		I	
IGNITION SYSTEM									
Spark plugs	Replace every 100,000 km (62,500 miles)								
EMISSION CONTROL SYSTEM									
E.G.R. system				I				I	
ELECTRICAL SYSTEM									
Battery electrolyte level & specific gravity	I	I	I	I	I	I	I	I	I
CHASSIS & BODY									
Brake lines, hoses & connections	I	I	I	I	I	I	I		I
Brake fluid *4		R		R		R		R	
Parking brake	I	I	I	I	I	I	I	I	I
Power brake unit & hoses	I	I	I	I	I	I	I	I	I
Disc brakes	I	I	I	I	I	I	I	I	I
Power steering fluid, lines, hoses, and connections	I	I	I	I	I	I	I	I	I
Steering operation & linkages		I		I		I		I	
Manual transaxle oil					R				

Maintenance Item	Maintenance Interval (Number of months or km (miles), whichever comes first)									
	Months	12	24	36	48	60	72	84	96	108
	×1000 km	20	40	60	80	100	120	140	160	180
	×1000 miles	12.5	25	37.5	50	62.5	75	87.5	100	112.5
Automatic transaxle/transmission fluid level			I			I			I	
Front & rear suspension & ball joints		I		I		I		I		
Driveshaft dust boots		I		I		I		I		
bolts & nuts on seats		I		I		I		I		
Exhaust system heat shields		I		I		I		I		
Cabin air filter (if installed) (aldehyde filter)	R	R	R	R	R	R	R	R	R	
Cabin air filter (if installed)(pollen filter)		R		R		R		R		
Body condition (for rust, corrosion & perforation)	Inspect annually									

For Israel
Chart symbols:

I : Inspect and clean, repair, adjust, or replace if necessary. (Oil-permeated air cleaner elements cannot be cleaned using the air-blow method.)
R : Replace
L : Lubricate
C : Clean

Remarks:

- To ensure efficient operation of the engine and all systems related to emission control, the ignition and fuel systems must be serviced regularly. It is strongly recommended that all servicing related to these systems be done by an authorized Mazda Dealer.
- After the described period, continue to follow the described maintenance at the recommended intervals.
- Refer below for a description of items marked* in the maintenance chart.

*1: Also inspect and adjust the power steering and air conditioner drive belts, if installed.

*2: If the vehicle is operated under any of the following conditions, change the engine oil and oil filter every 10,000 km (6,000 miles) or shorter.

a. Driving in dusty conditions.
b. Extended periods of idling or low speed operation.
c. Driving for long period in cold temperatures or driving regularly at short distance only.

*3: If the vehicle is operated in very dusty or sandy areas, inspect and if necessary, clean or replace the air cleaner element more often than the recommended intervals.

*4: This is a full function check of electrical systems such as lights, wiper and washer systems (including wiper blades), and power windows.

*5: If the brakes are used extensively (for example, continuous hard driving or mountain driving) or if the vehicle is operated in extremely humid climates, change the brake fluid annually.

Maintenance Item	Maintenance Interval (Number of months or km (miles), whichever comes first)												
	Months	12	24	36	48	60	72	84	96	108	120	132	144
	×1000 km	15	30	45	60	75	90	105	120	135	150	165	180
	×1000 miles	9	18	27	36	45	54	63	72	81	90	99	108
ENGINE													
Drive belts *1	I	I	I	I	I	I	I	I	I	I	I	I	
Engine oil *2	R	R	R	R	R	R	R	R	R	R	R	R	
Oil filter *2	R	R	R	R	R	R	R	R	R	R	R	R	
COOLING SYSTEM													
Cooling system (Including coolant level adjustment)		I		I		I		I		I		I	
Engine coolant	Replace at first 4 years or 90,000 km; after that, every 2 years												
FUEL SYSTEM													
Air cleaner element *3	C	C	C	R	C	C	C	R	C	C	C	R	
Fuel filter					R					R			
Fuel lines & hoses		I		I		I		I		I		I	
IGNITION SYSTEM													
Spark plugs	Replace every 90,000 km (54,000 miles)												

Maintenance Item	Maintenance Interval (Number of months or km (miles), whichever comes first)											
	Months	12	24	36	48	60	72	84	96	108	120	132	144
	×1000 km	15	30	45	60	75	90	105	120	135	150	165	180
	×1000 miles	9	18	27	36	45	54	63	72	81	90	99	108
EMISSION CONTROL SYSTEM													
Evaporative system					I				I				I
E.G.R. system (if installed)					I				I				I
ELECTRICAL SYSTEM													
Battery electrolyte level & specific gravity		I	I	I	I	I	I	I	I	I	I	I	I
All electrical system *4		I	I	I	I	I	I	I	I	I	I	I	I
CHASSIS & BODY													
Brake & clutch pedals		I	I	I	I	I	I	I	I	I	I	I	I
Brake lines, hoses & connections		I	I	I	I	I	I	I	I	I	I	I	I
Brake fluid *5		I	R	I	R	I	R	I	R	I	R	I	R
Parking brake		I	I	I	I	I	I	I	I	I	I	I	I
Power brake unit & hoses		I	I	I	I	I	I	I	I	I	I	I	I
Disc brakes		I	I	I	I	I	I	I	I	I	I	I	I
Power steering fluid, lines, hoses, and connections		I	I	I	I	I	I	I	I	I	I	I	I
Steering operation & linkages			I		I		I		I		I		I
Manual transaxle oil							R						R
Automatic transaxle/transmission fluid level			I		I		I		I		I		I
Front & rear suspension & ball joints				I		I		I		I		I	
Driveshaft dust boots				I		I		I		I		I	
Exhaust system & heat shields			I		I		I		I		I		I
Bolts & nuts on seats			I		I		I		I		I		I
Body condition (for rust, corrosion & perforation)		Inspect annually											
Cabin air filter (if installed)		R	R	R	R	R	R	R	R	R	R	R	R

For GCC
Chart symbols:

I : Inspect and repair, clean, adjust, or replace if necessary. (Oil-permeated air cleaner elements cannot be cleaned using the air-blow method.)
R : Replace
T : Tighten
C : Clean

Remarks:

- To ensure efficient operation of the engine and all systems related to emission control, the ignition and fuel systems must be serviced regularly. It is strongly recommended that all servicing related to these systems be done by an authorized Mazda Dealer.
- After the described period, continue to follow the described maintenance at the recommended intervals.
- Refer below for a description of items marked* in the maintenance chart.

*1: Also inspect and adjust the power steering and air conditioner drive belts, if installed.

*2: If the vehicle is operated under any of the following conditions, change the engine oil and oil filter more often than recommended intervals.

a. Driving in dusty conditions.
b. Extended periods of idling or low speed operation.
c. Driving for long period in cold temperatures or driving regularly at short distance only.

*3: If the vehicle is operated in very dusty or sandy areas, inspect and if necessary, clean or replace the air cleaner element more often than the recommended intervals.

*4: This is a full function check of electrical systems such as lights, wiper and washer systems (including wiper blades), and power windows.

*5: If the brakes are used extensively (for example, continuous hard driving or mountain driving) or if the vehicle is operated in extremely humid climates, change the brake fluid annually.

Maintenance Item	Maintenance Interval (Number of months or km (miles), whichever comes first)															
	Months	6	12	18	24	30	36	42	48	54	60	66	72	78	84	90	96
	×1000 km	10	20	30	40	50	60	70	80	90	100	110	120	130	140	150	160
	×1000 miles	6.25	12.5	18.75	25	31.25	37.5	43.75	50	56.25	62.5	68.75	75	81.25	87.5	93.75	100
ENGINE																	
Drive belts *1		I	I	I	I	I	I	I	I	I	I	I	I	I	I	I	I
Engine oil *2		R	R	R	R	R	R	R	R	R	R	R	R	R	R	R	R
Oil filter *2		R	R	R	R	R	R	R	R	R	R	R	R	R	R	R	R
COOLING SYSTEM																	
Cooling system			I		I		I		I		I		I		I		I
Engine coolant		Replace every 2 years															
FUEL SYSTEM																	
Air cleaner element *3			C		C		R		C		C		R		C		C
Fuel filter					R				R				R				R
Fuel lines & hoses			I		I		I		I		I		I		I		I
IGNITION SYSTEM																	
Spark plugs		Replace every 100,000 km (62,500 miles)															
EMISSION CONTROL SYSTEM																	
Evaporative system (if intalled)			I		I		I		I		I		I		I		I
E.G.R. system (if installed)			I		I		I		I		I		I		I		I
ELECTRICAL SYSTEM																	
Battery electrolyte level & specific gravity			I		I		I		I		I		I		I		I
All electrical system *4			I		I		I		I		I		I		I		I
CHASSIS & BODY																	
Brake & clutch pedal		I	I	I	I	I	I	I	I	I	I	I	I	I	I	I	I
Brake lines, hoses & connections			I		I		I		I		I		I		I		I
Brake fluid *5		I	I	I	R	I	I	I	R	I	I	I	R	I	I	I	R
Parking brake		I	I	I	I	I	I	I	I	I	I	I	I	I	I	I	I
Power brake unit & hoses			I		I		I		I		I		I		I		I
Disc brakes		I	I	I	I	I	I	I	I	I	I	I	I	I	I	I	I
Power steering fluid, lines, hoses and connections		I	I	I	I	I	I	I	I	I	I	I	I	I	I	I	I
Steering operation & linkages			I		I		I		I		I		I		I		I
Manual transaxle oil											R						
Automatic transmission / transaxle fluid level			I		I		I		I				I		I		I
Automatic transmission / transaxle fluid						R					R					R	
Front & rear suspension & ball joints					I				I				I				I
Driveshaft dust boots					I				I				I				I
Bolts & nuts on chassis & body			T		T		T		T		T		T		T		T
Exhaust system heat shields					I				I				I				I
Cabin air filter (if installed)			R		R		R		R		R		R		R		R
Body condition (for rust, corrosion & perforation)		Inspect annually															

Scheduled Maintenance Service (Specific Work Required)
For Europe (L.H.D. U.K.)

Maintenance Item	Specific Work Required
ENGINE	
Engine valve clearance	Measure clearance.
Drive belts	Inspect for wear, cracks and fraying, and check tension. Replace drive belt.
Engine timing belt	Replace engine timing belt.
Engine oil	Replace engine oil and inspect for leakage.
Oil filter	Replace oil filter and inspect for leakage.
Oil by-pass filter	Replace oil by-pass filter and inspect for leakage.
COOLING SYSTEM	
Cooling system (including coolant level adjustment)	Check coolant level and quality, and inspect for leakage.
Engine coolant	Replace coolant.
FUEL SYSTEM	
Idle speed	Check engine idle rpm.
Idle mixture (for CIS & carburetor leaded fuel)	Check the CO and HC concentrations (see W/M).
Choke system (for carburetor)	Check system operation.
Air cleaner element	Inspect for dirt, oil and damage. Clean air cleaner element (by blowing air). Replace air cleaner element.
Fuel filter	Replace fuel filter.
Fuel lines & hoses	Inspect for cracks, leakage and loose connection.
IGNITION SYSTEM (FOR GASOLINE)	
Initial ignition timing	Check initial ignition timing.
Spark plugs	Inspect for wear, damage, carbon, high-tension lead condition and measure plug gap. Replace spark plugs.
EMISSION CONTROL SYSTEM (FOR GASOLINE)	
Evaporative system	Check system operation (see W/M), vapor lines, vacuum fitting hoses and connection.
Throttle positioner system	Check the diaphragm and system operation, vacuum fitting hoses and connection.
Dash pot (for carburetor)	Check system operation.
E.G.R. system	Check system operation (see W/M), vacuum fitting hoses and connection.
ELECTRICAL SYSTEM	
Battery electrolyte level & specific gravity	Check level and specific gravity.
Battery condition	Check the battery for corroded or loose connections and cracks in the case (for maintenance free type).
All electrical system	Check function of lighting system, windshield wiper (including wiper blade condition) and washer and power windows.
Headlight alignment	Check headlight alignment
CHASSIS & BODY	
Brake & clutch pedals	Check pedal height and free play.
Brake fluid	Check fluid level and inspect for leakage. Replace brake fluid.
Clutch fluid	Check fluid level and inspect for leakage.
Brake lines, hoses & connections	Inspect for cracks, damage, chafing, corrosion, scars, swelling and fluid leakage.
Parking brake	Check lever stroke.
Power brake unit & hoses	Check vacuum lines, connections and check valve for improper attachment, air tightness, cracks chafing and deterioration.
Disc brakes	Test for judder and noise. Inspect caliper for correct operation and fluid leakage, brake pads for wear. Check disc plate condition and thickness.
Drum brakes	Test for judder and noise. Inspect brake drum for wear and scratches; brake lining for wear, peeling and cracks; and wheel cylinder for fluid leakage.
Manual steering gear oil	Check gear oil level.
Power steering fluid, lines, hoses & connections	Check fluid level and condition. Inspect for loose connection, routing, damage, and leaks.

Maintenance Item	Specific Work Required
Steering operation & linkages	Check steering wheel free play, hard steering, and operation noise. Check linkages, boots and ball joints condtion. Check grease or gear oil.
Power steering fluid & lines	Check fluid level and lines for improper attachment, leakage, cracks, damage, loose connections, chafing and deterioration.
Power steering fluid	Check fluid level.
Power steering system & hoses	Check lines for improper attachment, leakage, cracks, damage, loose connections, chafing and deterioration.
Steering & front suspension	Check free play of steering system, inspect shock absorbers for correct damping force, oil leakage, damage and looseness, and inspect coil springs, arms, links and stabilizer for damage and looseness.
Steering operation & gear housing	Check that the steering wheel has the specified play. Be sure to check for changes, such as excessive play, hard steering or strange noises. Check gear housing and boots for looseness, damage and grease/gear oil leakage.
Steering linkages tie rod ends & arms	Check ball joint, dust cover and other components for looseness, wear, damage and grease leakage.
Front & rear suspension ball joints	Inspect for grease leakage, cracks, damage and looseness.
Manual transmission/transaxle oil	Check oil level and inspect for leakage. Replace manual transmission/transaxle oil.
Automatic transaxle oil level	Check oil level.
Automatic transmission/transaxle fluid level	Check fluid level.
Automatic transmission/transaxle fluid	Replace automatic transmission/transaxle fluid.
Front & rear differential oil	Check oil level and inspect for leakage. Replace front & rear differential oil.
Rear differential oil	Check oil level and inspect for leakage. Replace rear differential oil.
Transfer oil	Check oil level and inspect for leakage. Replace transfer oil.
Upper arm shafts (for B-Series)	Lubricate the upper arm shafts for looseness or damage.
Front & rear wheel bearing grease	Remove wheel bearing and replace the grease.
Propeller shaft joints (with grease nipple)	Lubricate propeller shaft joints.
Driveshaft dust boots	Inspect for grease leakage, cracks, damage and looseness.
Wheel nuts	Tighten wheel nuts.
Bolts & nuts on chassis & body	Tighten bolts and nuts fastening suspension components, members and seat frames.
Bolts & nuts on seats	Move the seat back and forth and side to side to check for squeeking or rattling. If there is any squeeking or rattling, retorque bolts and nuts fastening seat frames.
Body condition (for rust, corrosion & perforation)	Inspect body surface for paint damage, rust, corrosion and perforation.
Exhaust system heat shields	Inspect for damage, corrosion, looseness of connections and gas leakage.
Tires (including spare tire) (with inflation pressure adjustment)	Check air pressure and inspect tires for tread wear, damage and cracks; and wheels for damage and corrosion.
Hinges & catches	Lubricate hinges and catches of doors, trunk lid and hood.
Seat belts	Inspect seat belt webbing for scratches, tears and wear, and check anchor bolt tightness.
Rear suspension uni-ball & sliding rubber bushing (for RX-7)	Inspect for cracks, damage and looseness.
Underside of vehicle	Inspect underside of vehicle (floor pans, frames, fuel lines, around exhaust system, etc.) for damage and corrosion.
Road test	Check brake operation/clutch operation/steering control/operation of meters and gauges/squeaks, rattles or unusual noises/engine general performance/emergency locking retractors.
AIR CONDITIONER SYSTEM	
Refrigerant amount	Check refrigerant amount.
Compressor operation	Check compressor operation, and inspect for noise, oil leakage, cracks and refrigerant leakage.
Cabin air filter	Replace cabin air filter.

ENGINE

B

LOCATION INDEX B-2
MECHANICAL LOCATION INDEX B-2
DRIVE BELT B-3
DRIVE BELT INSPECTION B-3
DRIVE BELT REPLACEMENT B-3
DRIVE BELT AUTO TENSIONER INSPECTION B-4
VALVE CLEARANCE B-4
VALVE CLEARANCE INSPECTION B-4
VALVE CLEARANCE ADJUSTMENT B-5
COMPRESSION PRESSURE B-9
COMPRESSION INSPECTION B-9
TIMING CHAIN B-10
TIMING CHAIN REMOVAL/INSTALLATION B-10
CYLINDER HEAD GASKET B-18
CYLINDER HEAD GASKET REPLACEMENT B-18
FRONT OIL SEAL B-21
FRONT OIL SEAL REPLACEMENT B-21
REAR OIL SEAL B-25
REAR OIL SEAL REPLACEMENT B-25
ENGINE B-26
ENGINE REMOVAL/INSTALLATION B-26
ENGINE DISASSEMBLY/ASSEMBLY B-31
VARIABLE VALVE TIMING B-32
VARIABLE VALVE TIMING ACTUATOR INSPECTION B-32
VARIABLE VALVE TIMING ACTUATOR REMOVAL/INSTALLATION B-32
OIL CONTROL VALVE (OCV) B-33
OIL CONTROL VALVE (OCV) REMOVAL/INSTALLATION B-33
OIL CONTROL VALVE (OCV) INSPECTION B-33

LOCATION INDEX

MECHANICAL LOCATION INDEX

A6E220001002W01

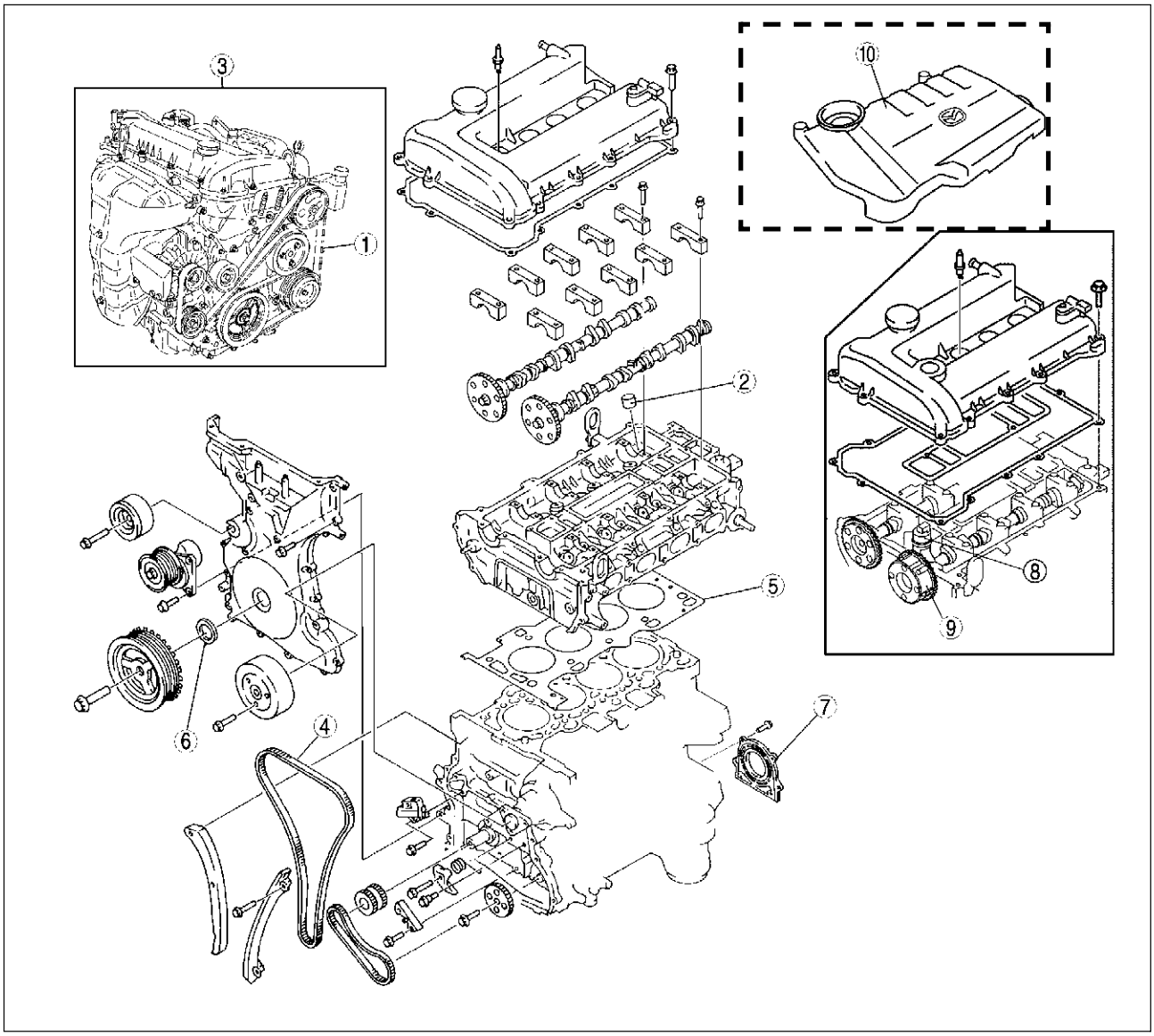

A6E2200W300

1	Drive belt (See B–3 DRIVE BELT INSPECTION) (See B–3 DRIVE BELT REPLACEMENT) (See B–4 DRIVE BELT AUTO TENSIONER INSPECTION)
2	Tappet (See B–4 VALVE CLEARANCE INSPECTION)
3	Engine (See B–9 COMPRESSION INSPECTION) (See B–26 ENGINE REMOVAL/INSTALLATION) (See B–31 ENGINE DISASSEMBLY/ASSEMBLY)
4	Timing Chain (See B–10 TIMING CHAIN REMOVAL/INSTALLATION)
5	Cylinder head gasket (See B–18 CYLINDER HEAD GASKET REPLACEMENT)

6	Front oil seal (See B–21 FRONT OIL SEAL REPLACEMENT)
7	Rear oil seal (See B–25 REAR OIL SEAL REPLACEMENT)
8	Oil control valve (OCV) (L3) (See B–33 OIL CONTROL VALVE (OCV) REMOVAL/INSTALLATION) (See B–33 OIL CONTROL VALVE (OCV) INSPECTION)
9	Variable valve timing actuator (L3) (See B–32 VARIABLE VALVE TIMING ACTUATOR REMOVAL/INSTALLATION) (See B–32 VARIABLE VALVE TIMING ACTUATOR INSPECTION)
10	Plug hole plate (See G–10 SPARK PLUG REMOVAL/INSTALLATION)

DRIVE BELT

DRIVE BELT INSPECTION

A6E221015800W01

Note
- Front and water pump drive belt deflection/tension inspection is not necessary because of the use of the front drive belt auto tensioner.

Front Drive Belt

1. Verify that the drive belt auto tensioner indicator mark does not exceeds the limit.
   - If it exceeds the limit, replace the drive belt. (SeeB–3 DRIVE BELT REPLACEMENT.)

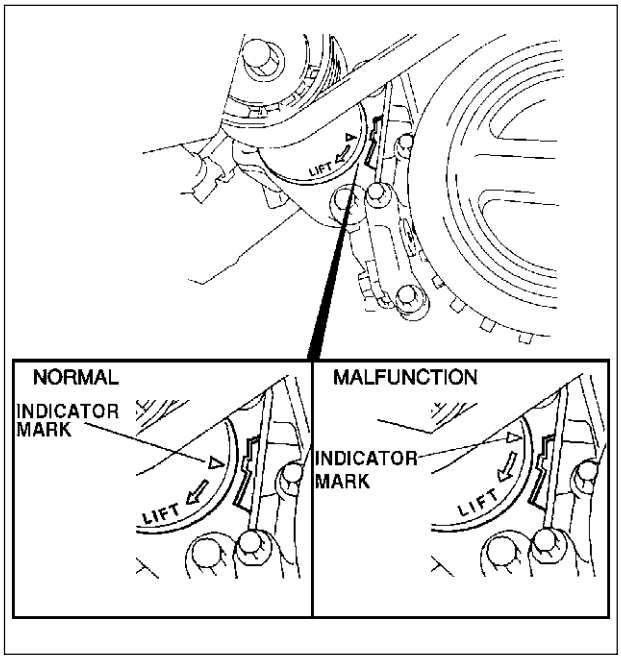

AME2210W001

DRIVE BELT REPLACEMENT

A6E221015800W03

1. Remove the splash shield (RH).
2. Turn the center of the tensioner pulley clockwise to release tension to the drive belt.
3. Remove the drive belt.
4. Reinstall the drive belt or install a new drive belt.
5. Verify that the drive belt auto tensioner indicator mark does not exceeds the limit. (See B–3 DRIVE BELT INSPECTION.)
   - If it exceeds the limit, replace the drive belt.
6. Install the splash shield (RH).

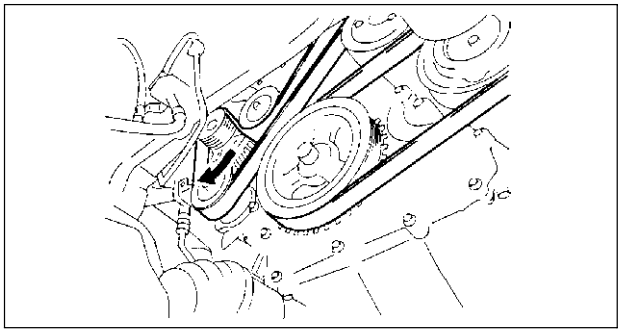

AME2210W002

DRIVE BELT AUTO TENSIONER INSPECTION

A6E221015980W01

1. Remove the drive belt. (See B–3 DRIVE BELT REPLACEMENT.)
2. Verify that the drive belt auto tensioner moves smoothly in the operational direction.
   - Replace the drive belt auto tensioner if necessary.
3. Turn the drive belt auto tensioner pulley by hand and verify that it rotates smoothly.
   - Replace the drive belt auto tensioner if necessary.
4. Install the drive belt. (See B–3 DRIVE BELT REPLACEMENT.)

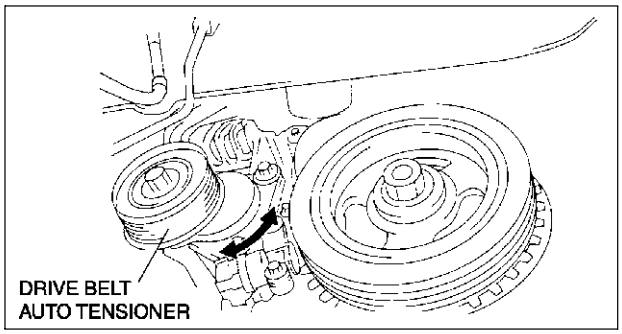

AME2210W003

VALVE CLEARANCE

VALVE CLEARANCE INSPECTION

A6E221212111W01

1. Disconnect the negative battery cable.
2. Remove the tire (RH).
3. Remove the splash shield (RH).
4. Remove the spark plugs. (See G–10 SPARK PLUG REMOVAL/INSTALLATION.)
5. Remove the high-tension lead.
6. Remove the oil control valve (OCV) connector.
7. Remove the ventilation hose.
8. Remove the cylinder head cover.
9. Verify that the engine is in cold condition.
10. Measure the valve clearance.
    (1) Turn the crankshaft clockwise so that the No.1 piston is at TDC of the compression stroke.
    (2) Measure the valve clearance at A in the figure.
        - If the valve clearance exceeds the space the tappet. (See B–5 VALVE CLEARANCE ADJUSTMENT.)

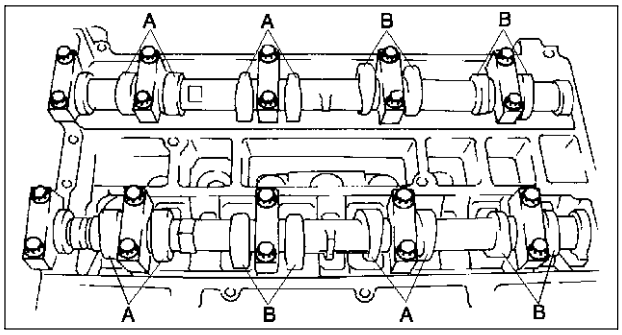

AME2212W001

Note
- Make sure to note the measured values for choosing the suitable replacement tappets.

Standard [Engine cold]
IN: 0.22—0.28 mm {0.0087—0.0110 in}
(0.25±0.03 mm {0.0098±0.0011 in})
EX: 0.27—0.33 mm {0.0106—0.0130 in}
(0.30±0.03 mm {0.0118±0.0011 in})

    (3) Turn the crankshaft **360°** clockwise so that the No.4 piston is at TDC of the compression stroke.
    (4) Measure the valve clearance at B in the figure.
        - If the valve clearance exceeds the standard, replace the tappet. (See B–5 VALVE CLEARANCE ADJUSTMENT.)

Note
- Make sure to note the measured values for choosing the suitable replacement tappets.

Standard [Engine cold]
IN: 0.22—0.28 mm {0.0087—0.0110 in} (0.25±0.03 mm {0.0098±0.0011 in})
EX: 0.27—0.33 mm {0.0106—0.0130 in} (0.30±0.03 mm {0.0118±0.0011 in})

11. Install the cylinder head cover. (See B–17 Cylinder Head Cover Installation Note.)
12. Install the ventilation hose.
13. Install the oil control valve connector.
14. Install the high-tension lead. (See G–11 HIGH-TENSION LEAD REMOVAL/INSTALLATION.)
15. Install the spark plugs. (See G–10 SPARK PLUG REMOVAL/INSTALLATION.)

16. Install the splash shield (RH).
17. Install the tire (RH).

VALVE CLEARANCE ADJUSTMENT

A6E221212111W02

1. Disconnect the negative battery cable.
2. Remove the tire (RH).
3. Remove the splash shield (RH).
4. Remove the spark plugs. (See G–10 SPARK PLUG REMOVAL/INSTALLATION.)
5. Remove the high-tension lead.
6. Remove the oil control valve (OCV) connector.
7. Remove the ventilation hose.
8. Remove the cylinder head cover.
9. Remove the drive belt. (See B–3 DRIVE BELT REPLACEMENT.)
10. Remove the joint shaft from the front drive shaft (RH). (See M–17 DRIVE SHAFT REMOVAL/INSTALLATION.)
11. Remove the engine front cover lower blind plug.

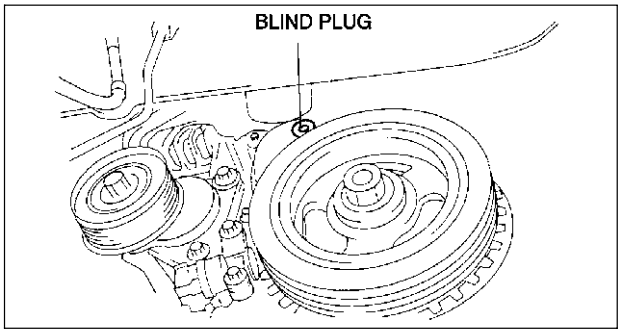

AME2212W002

12. Remove the engine front cover upper blind plug.
13. Remove the cylinder block lower blind plug.

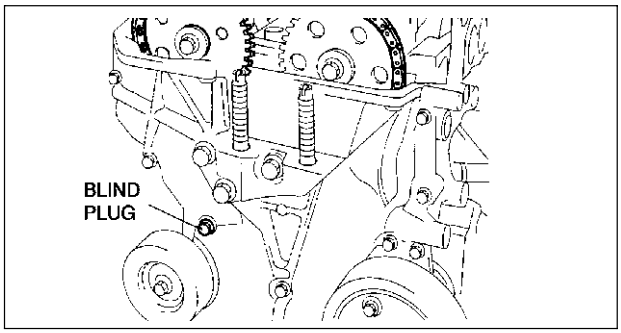

AME2212W003

14. Install the **SST** as shown.
15. Turn the crankshaft clockwise the crankshaft is in the No.1 cylinder TDC position.

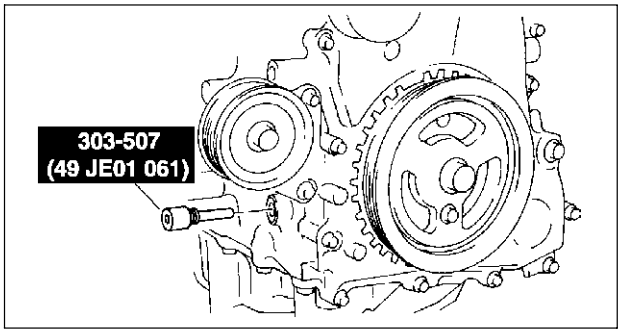

AME2212W004

16. Loosen the timing chain.
    (1) Using a suitable screwdriver or equivalent tool, unlock the chain tensioner ratchet.
    (2) Turn the exhaust camshaft clockwise using a suitable wrench on the cast hexagon and loosen the timing chain.
    (3) Placing the suitable bolt **(M6 X 1.0 length 25mm—35mm {0.99in—1.37in})** at the engine front cover upper blind plug, secure the chain guide at the position where the tension is released.

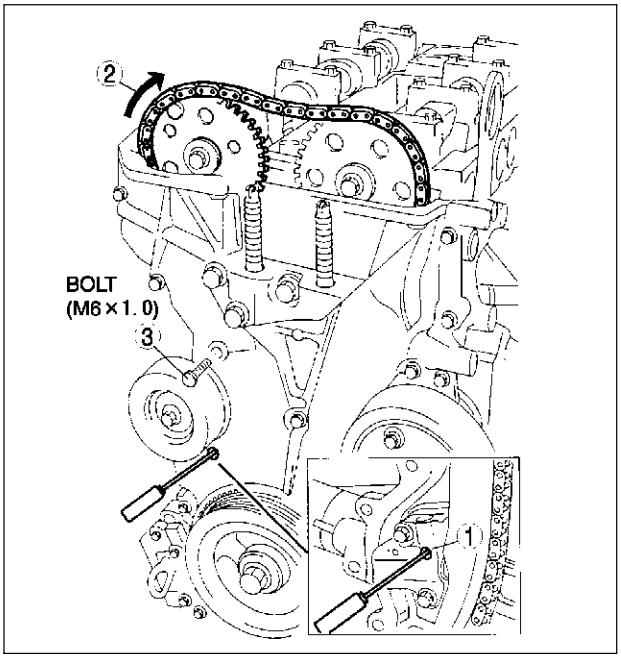

AME2212W005

17. Hold the exhaust camshaft using a suitable wrench on the cast hexagon as shown.

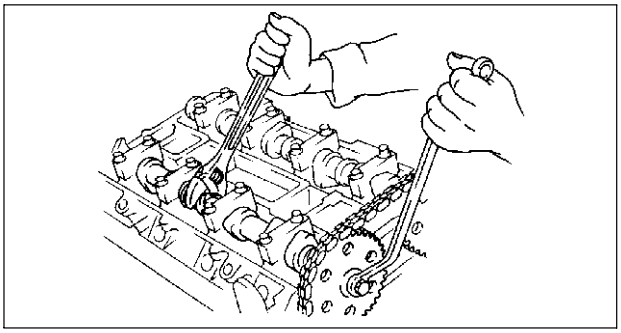
AME2212W006

18. Remove the exhaust camshaft sprocket.

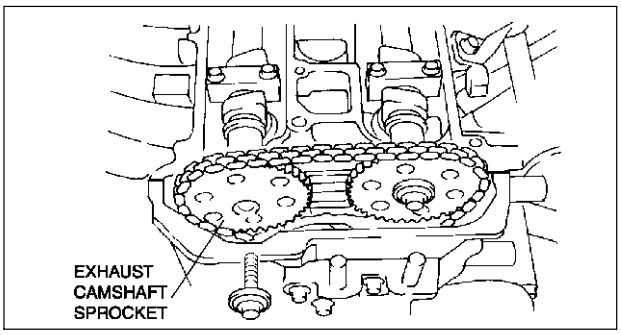

AME2212W007

19. Loosen the camshaft cap bolts in several passes in the order shown.

    Note
    - The cylinder head and the camshaft caps are numbered to make sure they are reassembled in their original position. When removed, keep the caps with the cylinder head they were removed from. Do not mix the caps.

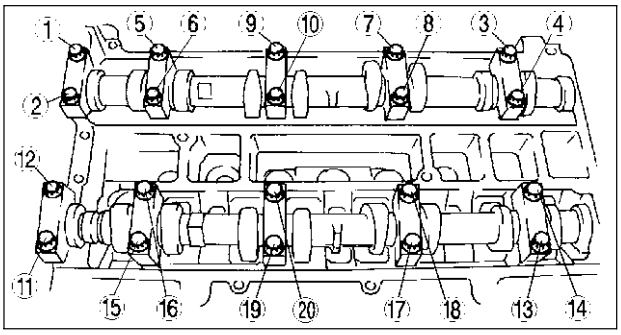

AME2212W008

20. Remove the camshaft.
21. Remove the tappet.
22. Select proper adjustment shim.

New adjustment shim
= Removed shim thickness + Measured valve clearance - Standard valve clearance (IN: 0.25 mm {0.0098 in}, EX: 0.30 mm {0.0118 in})

Standard [Engine cold]
IN: 0.22—0.28 mm {0.0087—0.0110 in} (0.25±0.03 mm {0.0098±0.0011 in})
EX: 0.27—0.33 mm {0.0106—0.0130 in} (0.30±0.03 mm {0.0118±0.0011 in})

23. Install the camshaft with No.1 cylinder aligned with the TDC position.
24. Tighten the camshaft cap bolt using the following two steps.
    (1) Tighten to **5.0—9.0 N·m {51.0—91.7 kgf·cm, 44.3—79.5 in·lbf}**.
    (2) Tighten to **14.0—17.0 N·m {1.5—1.7 kgf·m, 10.4—12.5 ft·lbf}**.

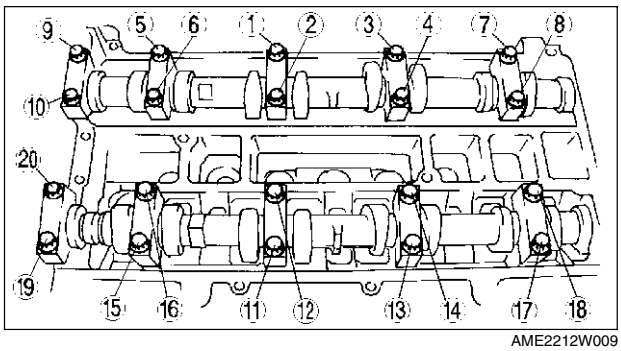

AME2212W009

25. Install the exhaust camshaft sprocket.

Note
- Do not tighten the bolt for the camshaft sprocket during this step. First confirm the valve timing, then tighten the bolt.

26. Install the **SST** to the camshaft as shown.

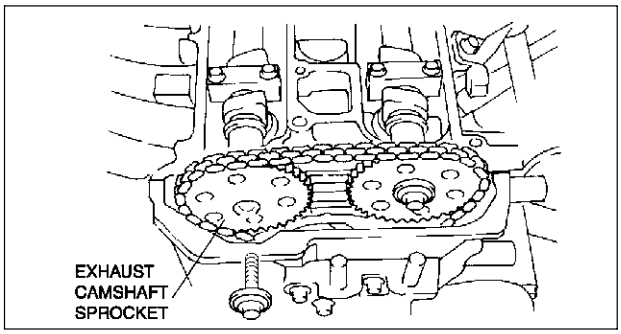

AME2212W007

European countries

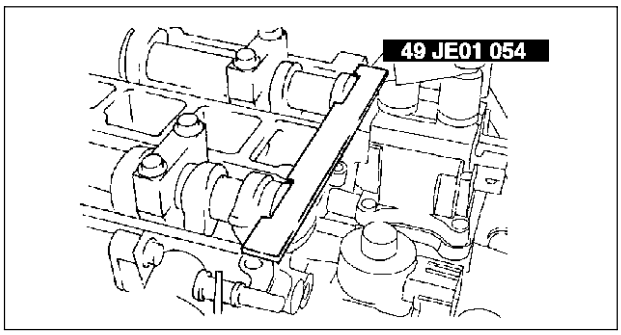

AME2212W010

Except European countries
27. Remove the **M6 x 1.0 bolt (length 25mm—35mm {0.99in—1.37in})** from the engine front cover to apply tension to the timing chain.
28. Turn the crankshaft clockwise the crankshaft is in the No.1 cylinder TDC position.

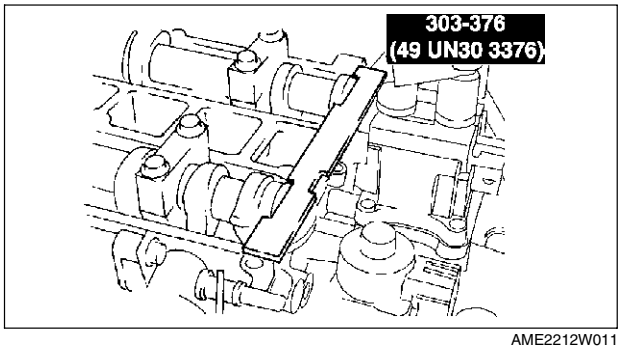

AME2212W011

29. Hold the exhaust camshaft using a suitable wrench on the cast hexagon as shown.
30. Tighten the exhaust camshaft sprocket lock bolt.

    Tightening torque:
    69—75 N·m {7.10—7.6 kgf·m, 50.9—55.3 ft·lbf}

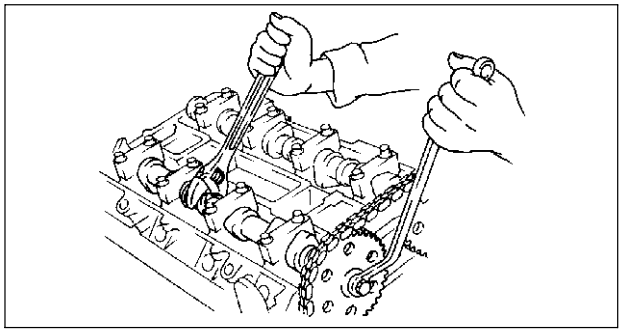
AME2212W006

31. Remove the **SST** from the camshaft.
32. Remove the **SST** from the block lower blind plug.
33. Rotate the crankshaft clockwise two turns until the TDC position.
    - If not aligned, loosen the crankshaft pulley lock bolt and repeat from Step 14.
34. Apply silicone sealant to the engine front cover upper blind plug.
35. Install the engine front cover upper blind plug.

    Tightening torque:
    10 N·m {1.0 kgf·m, 7.4 ft·lbf}

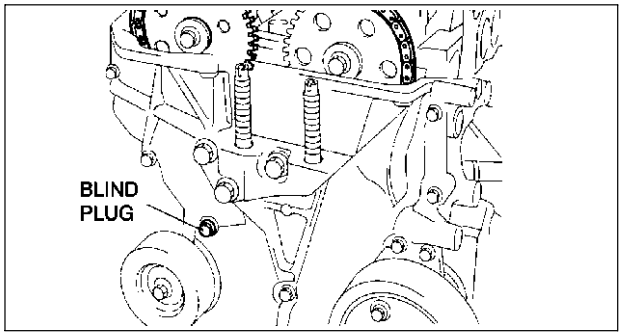

AME2212W003

36. Install the cylinder block lower blind plug.

    Tightening torque:
    18—22 N·m {1.9—2.2 kgf·m, 13.3—16.2 ft·lbf}

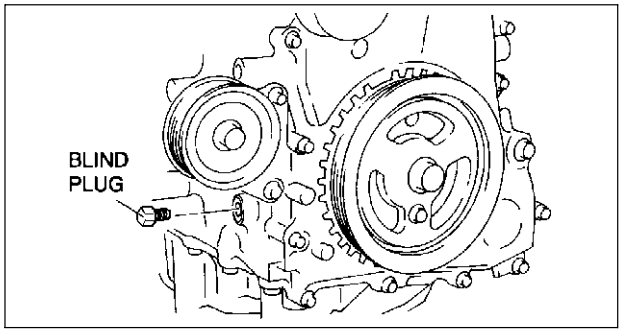

AME2212W012

37. Install the new engine front cover lower blind plug.

    Tightening torque:
    12 N·m {1.2 kgf·m, 8.9 ft·lbf}

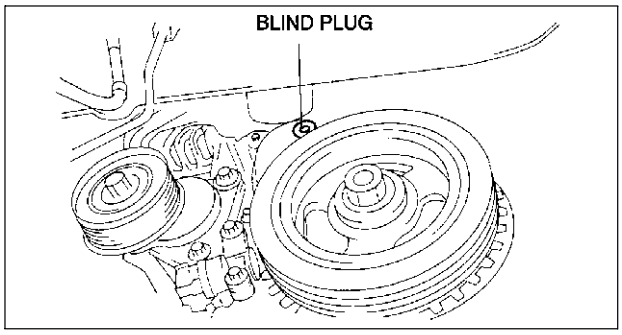

AME2212W002

38. Connect the front drive shaft (RH) and the joint shaft. (See M–17 DRIVE SHAFT REMOVAL/INSTALLATION)
39. Install the drive belt. (See B–3 DRIVE BELT REPLACEMENT.)
40. Install the cylinder head cover. (See B–17 Cylinder Head Cover Installation Note.)
41. Install the ventilation hose.
42. Install the oil control valve (OCV) connector.
43. Install the high-tension lead. (See G–11 HIGH-TENSION LEAD REMOVAL/INSTALLATION.)
44. Install the spark plugs. (See G–10 SPARK PLUG REMOVAL/INSTALLATION.)
45. Install the splash shield (RH).
46. Install the tire (RH).

COMPRESSION PRESSURE

COMPRESSION INSPECTION

A6E221402000W01

Warning

- **Hot engines and oil can cause severe burns. Be careful not to burn yourself during removal/ installation of each component.**

1. Verify that the battery is fully charged.
   - Recharge it if necessary. (See G–4 BATTERY INSPECTION.)
2. Warm up the engine to the normal operating temperature.
3. Stop the engine and allow it to cool off for **about 10 min**.
4. Perform “Fuel Line Safety Procedures”. Leave the fuel pump relay removed. (See F–17 BEFORE REPAIR PROCEDURE.)

Warning

- **Fuel vapor is hazardous. It can very easily ignite, causing serious injury and damage. Always keep sparks and flames away from fuel.**
- **Fuel line spills and leakage are dangerous. Fuel can ignite and cause serious injuries or death and damage. Fuel can also irritate skin and eyes. To prevent this, always complete the “Fuel Line Safety Procedure”. (See F–17 Fuel Line Safety Procedure.)**

5. Remove the ignition coil connector.
6. Remove the spark plugs. (See G–10 SPARK PLUG REMOVAL/INSTALLATION.)
7. Connect a compression gauge into the spark plug hole.
8. Fully depress the accelerator pedal and crank the engine.
9. Note the maximum gauge reading.
10. Inspect each cylinder as above.
    - If the measured value is less than the limited value, or there is a cylinder whose compression value varies from that of other cylinders by **196.1 kPa {1.999 kgf/cm^2, 28.44 psi}** or more, add a small amount of engine oil through the spark plug hole. Then measure the compression pressure and perform the respective operations for the following cases.
      — If the compression increases, the piston, the piston rings, or cylinder wall may be worn and overhaul is required.
      — If the compression stays low, a valve may be stuck or improperly seated and overhaul is required.
      — If the compression in adjacent cylinders stays low, the cylinder head gasket may be damaged or the cylinder head distorted and overhaul is required.

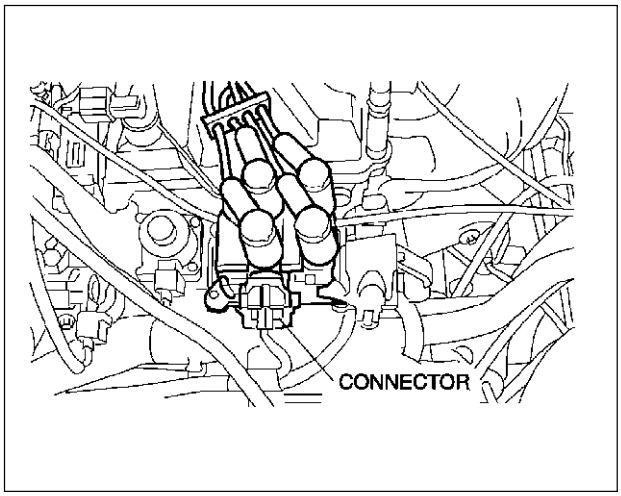

AME2214W001

Compression

kPa {kgf/cm^2, psi} [rpm]

Item	Engine type
	L8
Standard	1,750 {17.845, 253.816} [300]
Minimum	1,225 {12.492, 177.64} [300]
Maximum difference between cylinders	196.1 {1.999, 28.44}

kPa {kgf/cm^2, psi} [rpm]

Item	Engine type
	LF
Standard	1,720 {17.5391, 249.465} [300]
Minimum	1,204 {12.277, 174.58} [300]
Maximum difference between cylinders	196.1 {1.999, 28.44}

kPa {kgf/cm^2, psi} [rpm]

Item	Engine type
	L3
Standard	1,430 {14.5819, 207.404} [290]
Minimum	1,000 {10.197, 145.00} [290]
Maximum difference between cylinders	196.1 {1.999, 28.44}

11. Disconnect the compression gauge.
12. Install the spark plugs. (See G–10 SPARK PLUG REMOVAL/INSTALLATION.)
13. Connect the ignition coil connector.
14. Install the fuel pump relay. (See F–17 BEFORE REPAIR PROCEDURE.)

TIMING CHAIN

TIMING CHAIN REMOVAL/INSTALLATION

A6E221512201W01

Warning

- **Fuel vapor is hazardous. It can very easily ignite, causing serious injury and damage. Always keep sparks and flames away from fuel.**
- **Fuel line spills and leakage are dangerous. Fuel can ignite and cause serious injures or death and damage. Fuel can also irritate skin and eyes. To prevent this, always complete the "Fuel Line Safety Procedure". (See F–17 Fuel Line Safety Procedure.)**

1. Disconnect the negative battery cable.
2. Remove the spark plugs. (See G–10 SPARK PLUG REMOVAL/INSTALLATION.)
3. Remove the tire (RH).
4. Remove the under cover.
5. Loosen the water pump pulley bolt and removal the drive belt. (See B–3 DRIVE BELT REPLACEMENT.)
6. Remove the CKP sensor. (See F–54 CRANKSHAFT POSITION (CKP) SENSOR REMOVAL/INSTALLATION.)
7. Drain the engine oil. (See D–4 ENGINE OIL REPLACEMENT.)
8. Remove the P/S oil pump with the oil hose still connected and position the P/S oil pump so that it is out of the way. (See N–22 POWER STEERING OIL PUMP REMOVAL/INSTALLATION.)
9. Remove the front drive shaft (RH) from the joint shaft. (See M–12 JOINT SHAFT REMOVAL/INSTALLATION.)
10. Remove in the order indicated in the table.
11. Install in the reverse order of removal.
12. Start the engine and:
    - Inspect for the engine oil, engine coolant, transaxle oil and fuel leakage.
    - Verify the ignition timing, idle speed and idle mixture. (See F–8 IGNITION TIMING INSPECTION.) (SeeF–9 IDLE MIXTURE INSPECTION.)
13. Perform a road test.

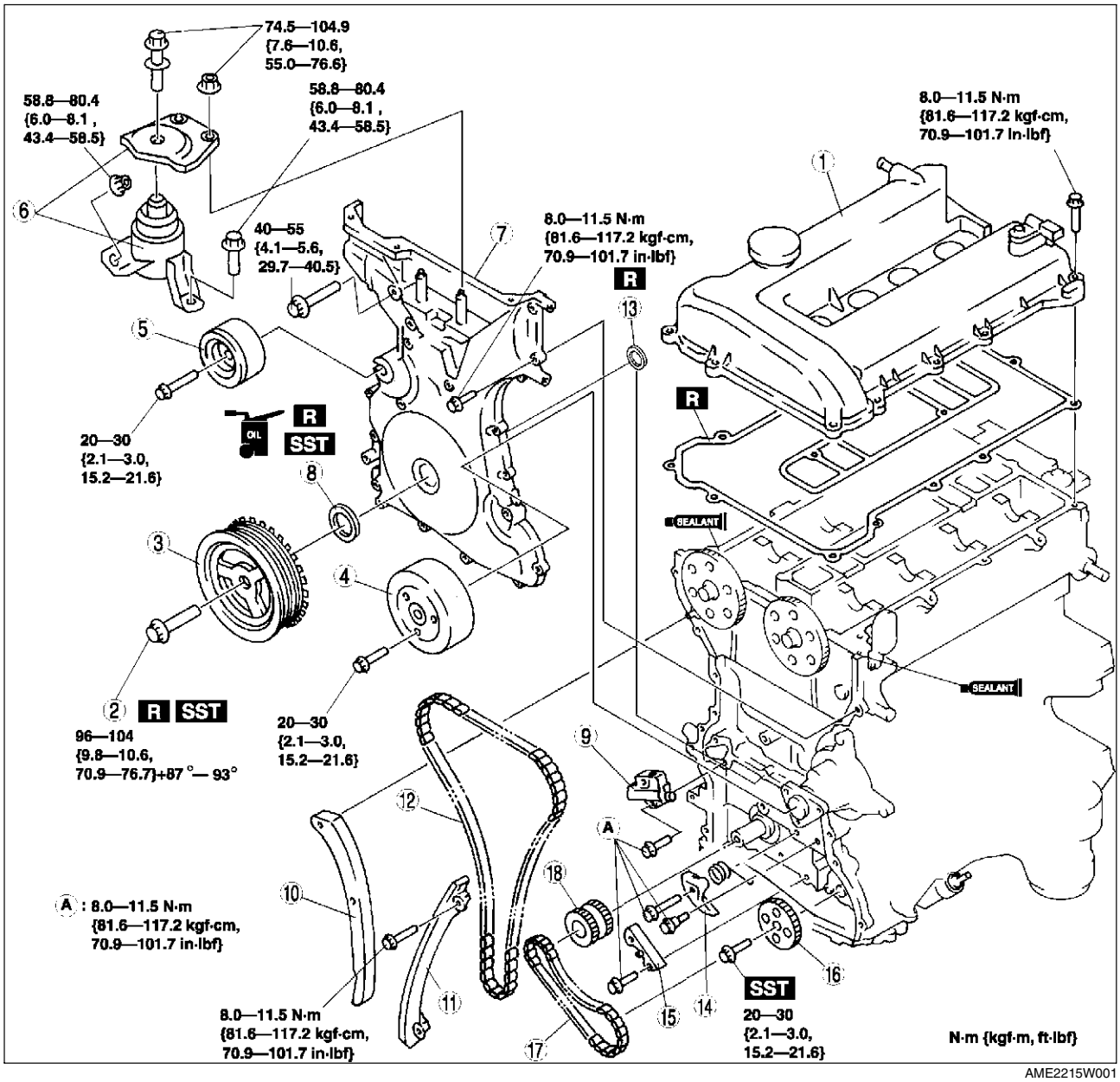

AME2215W001

1	Cylinder head cover (See B–17 Cylinder Head Cover Installation Note)
2	Crankshaft pulley lock bolt (See B–12 Crankshaft Pulley Lock Bolt Removal Note) (See B–16 Crankshaft Pulley Lock Bolt Installation Note)
3	Crankshaft pulley
4	Water pump pulley
5	Drive belt idler pulley
6	No.3 engine mount rubber and No.3 engine joint bracket (See B–12 No.3 Engine Mount Rubber and No.3 Engine Joint Bracket Removal Note) (See B–16 No.3 Engine Mount Rubber and No.3 Engine Joint Bracket Installation Note)
7	Engine front cover (See B–14 Engine Front Cover Installation Note)

8	Front oil seal (See B–13 Engine Front Cover Removal Note) (See B–15 Front Oil Seal Installation Note)
9	Chain tensioner (See B–12 Chain Tensioner Removal Note)
10	Tensioner arm
11	Chain guide
12	Timing chain (See B–14 Timing Chain Installation Note)
13	Seal
14	Oil pump chain tensioner
15	Oil pump chain guide
16	Oil pump sprocket (See B–13 Oil Pump Sprocket Removal Note) (See B–13 Oil Pump Sprocket Installation Note)
17	Oil pump chain
18	Camshaft sprocket

Crankshaft Pulley Lock Bolt Removal Note

1. Remove the cylinder block lower blind plug.
2. Install the **SST**.
3. Turn the crankshaft clockwise the crankshaft is in the No.1 cylinder TDC position.

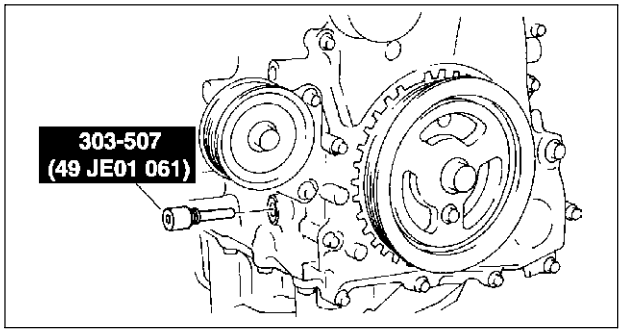

AME2212W004

4. Hold the crankshaft pully by using the **SSTs**.

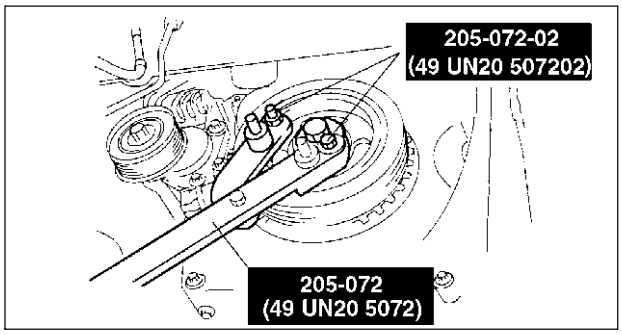

AME2215W002

Chain Tensioner Removal Note

1. Using a thin screwdriver, hold the chain tensioner ratchet lock mechanism away from the ratchet stem.
2. Slowly compress the tensioner piston.
3. Hold the tensioner piston using a **1.5 mm {0.059 in}** wire or paper clip.

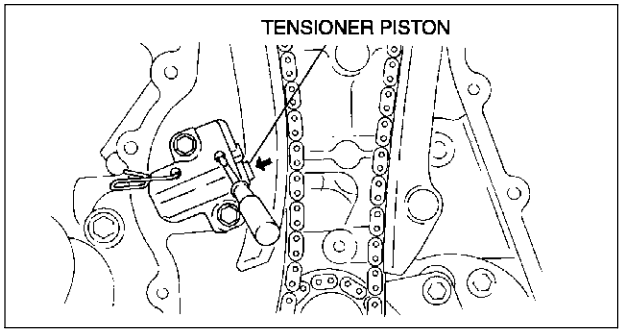

AME2215W003

No.3 Engine Mount Rubber and No.3 Engine Joint Bracket Removal Note

1. Suspend the engine using the **SSTs**.

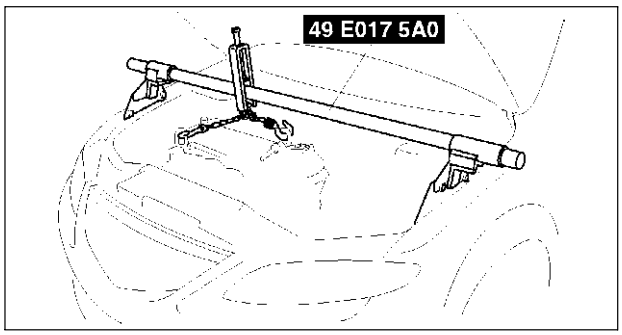

AME2215W004

Oil Pump Sprocket Removal Note

1. Hold the oil pump sprocket by using the **SST**.

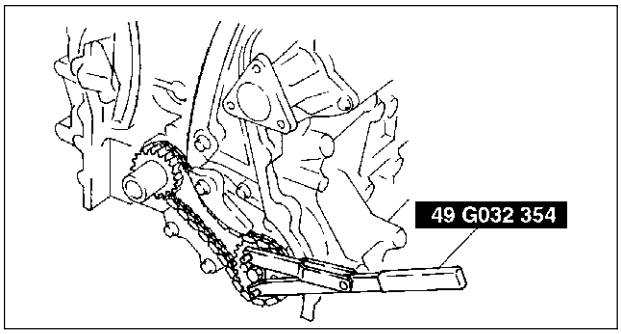

AME2215W005

Engine Front Cover Removal Note

1. Remove the oil seal using a screwdriver as shown.

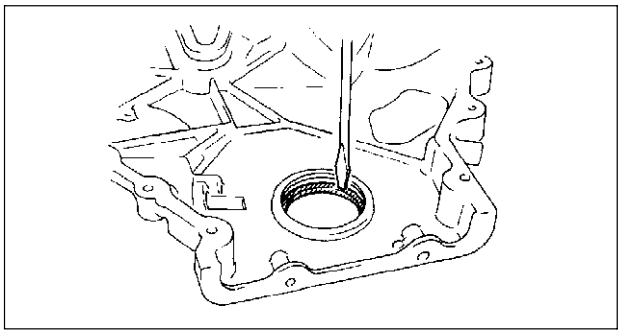

AME2215W006

Oil Pump Sprocket Installation Note

1. Hold the oil pump sprocket by using the **SST**.

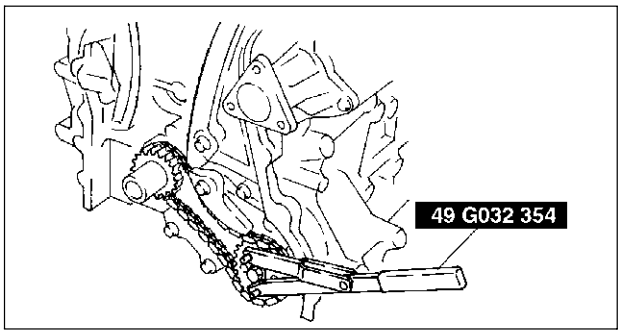

AME2215W005

Timing Chain Installation Note

1. Install the **SST** to the camshaft as shown.

European countries

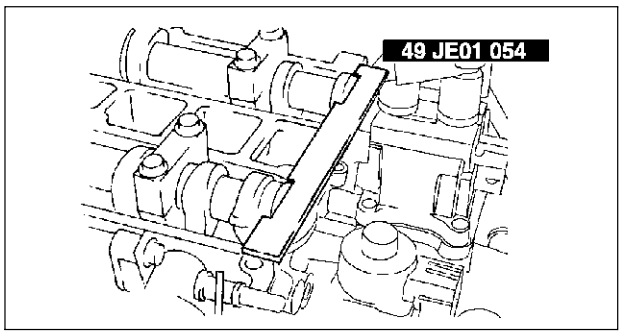

AME2212W010

Except European countries

2. Install the timing chain.
3. Remove the retaining wire or paper clip from the auto tensioner to apply tension to the timing chain.

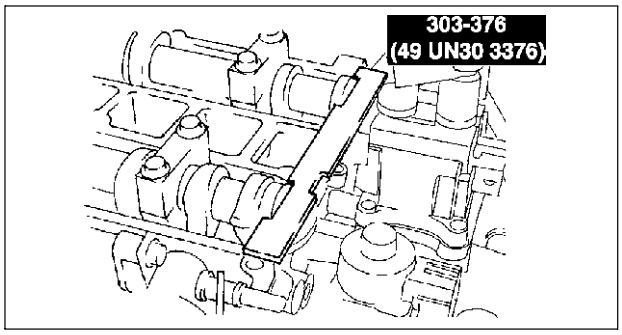

AME2212W011

Engine Front Cover Installation Note

1. Apply silicone sealant to the engine front cover as shown.

Caution

- **Install the cylinder head cover within 10 minutes of applying the silicone sealant.**
- **Silicone sealant is not need in area C as indicated below due to an existing. (L3)**

Thickness

A: 2.0—3.0 mm {0.079—0.118 in}
B: 1.5—2.5 mm {0.059—0.098 in}

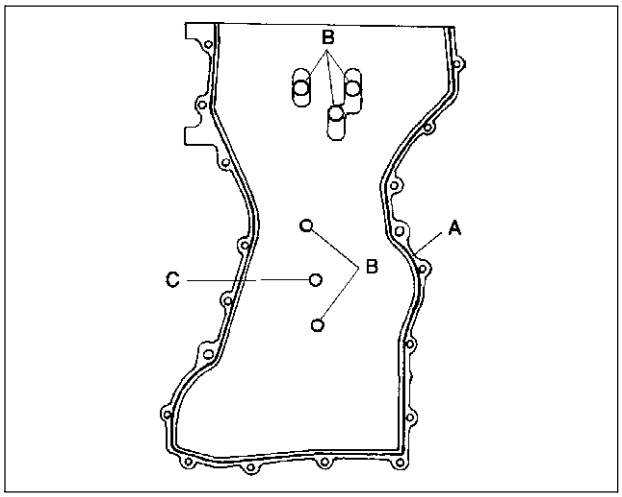

AME2215W007

2. Install the cylinder head cover bolts in the order as shown.

Bolt No.	Tightening torque
1—18	8.0—11.5 N·m {81.6—117.2 kgf·cm, 70.9—101.7 in·lbf}
19—22	40—55 N·m {4.1—5.6 kgf·m, 29.7—40.5 ft·lbf}

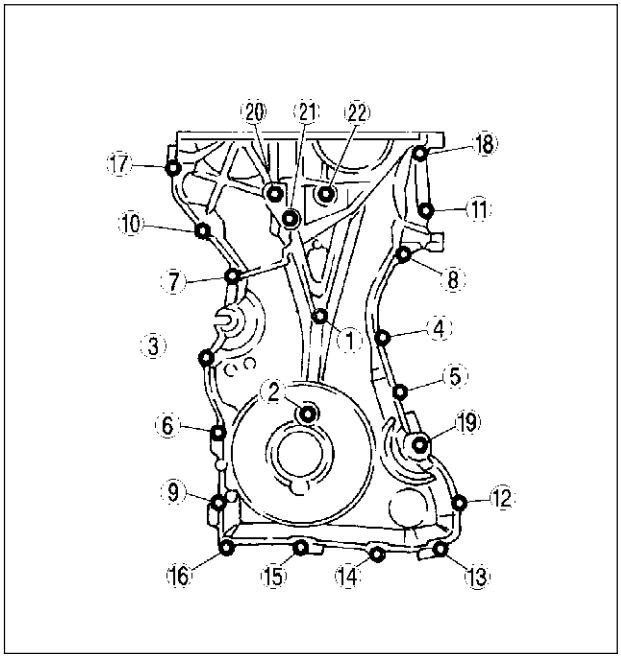

AME2215W008

Front Oil Seal Installation Note

1. Apply clean engine oil to the oil seal.
2. Push the oil seal slightly in by hand.
3. Compress the oil seal using the **SST** and a hammer.

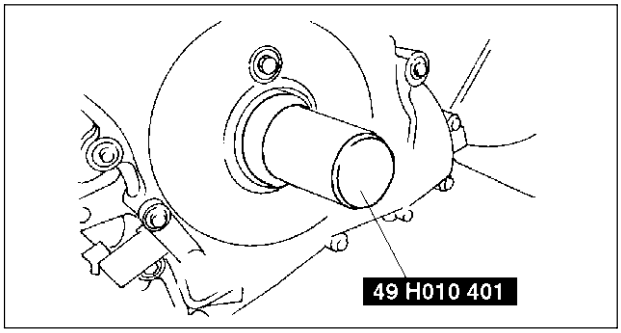

AME2215W009

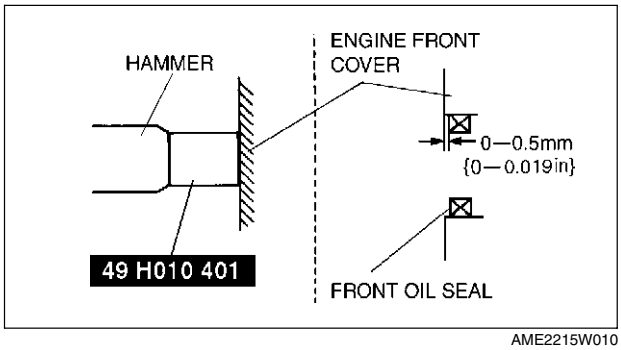

AME2215W010

No.3 Engine Mount Rubber and No.3 Engine Joint Bracket Installation Note

1. Tighten the stud bolt of the No.3 engine mount bracket.

   Tightening torque:
   7.0—13 N·m {71.4—132.5 kgf·cm, 62.0—115.0 in·lbf}

2. Install the No.3 engine mount rubber hand-tighten.

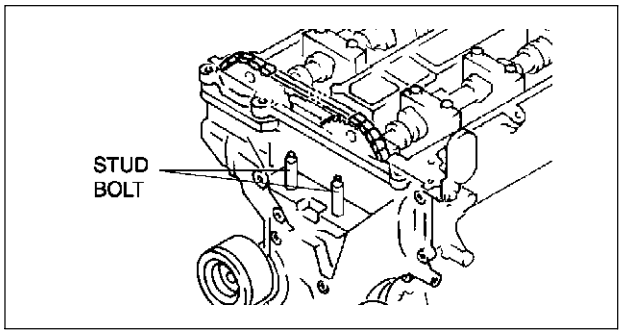

AME2215W011

3. Tighten the No.3 engine joint bracket is attached and bolts, nuts in the order shown.

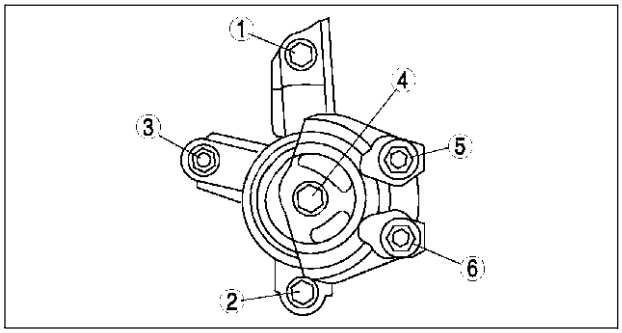

AME2215W012

Crankshaft Pulley Lock Bolt Installation Note

1. Install the **SST** to the camshaft as shown.

European countries

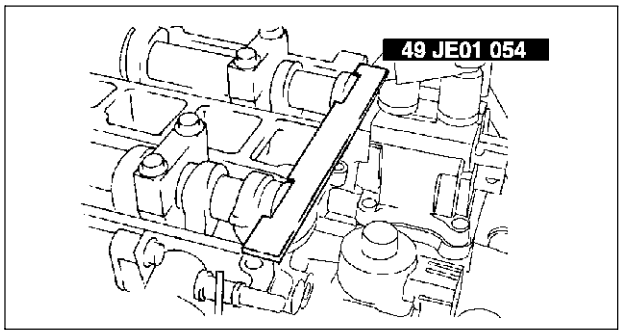

AME2212W010

Except European countries

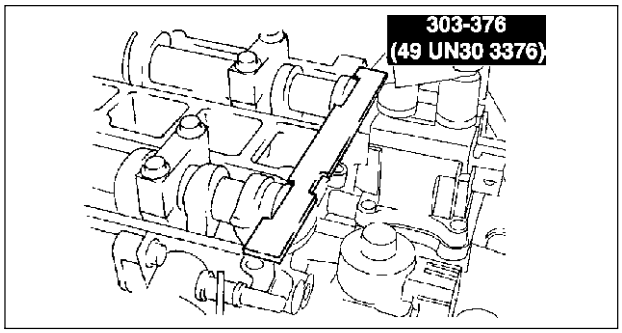

AME2212W011

2. Install the **M6 x 1.0 bolt** in by hand.
3. Turn the crankshaft clockwise the crankshaft is in the No.1 cylinder TDC position.

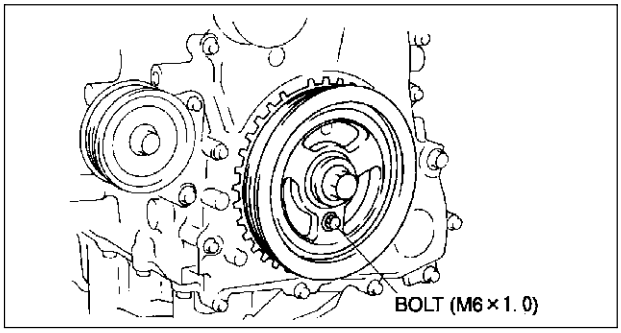

AME2215W013

4. Hold the crankshaft pully by using the **SST**.
5. Tighten the crankshaft pulley lock bolt using the following two steps.
   (1) Tighten to **96—104 N·m {9.8—10.6 kgf·m, 70.9—76.7 ft·lbf}**
   (2) Tighten **87°—93°**
6. Remove the M6 x 1.0 bolt.
7. Remove the **SST** from the camshaft.
8. Remove the **SST** from the cylinder block lower blind plug.
9. Rotate the crankshaft clockwise two turns until the TDC position.
   - If not aligned, loosen the crankshaft pulley lock bolt and repeat from Step 1.
10. Install the cylinder block lower blind plug.

Tightening torque:
18—22 N·m {1.9—2.2 kgf·m, 13.3—16.2 ft·lbf}

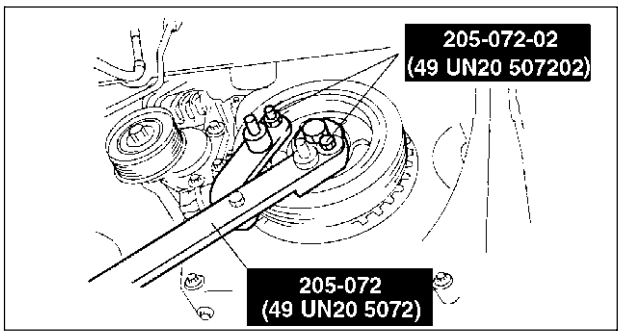

AME2215W002

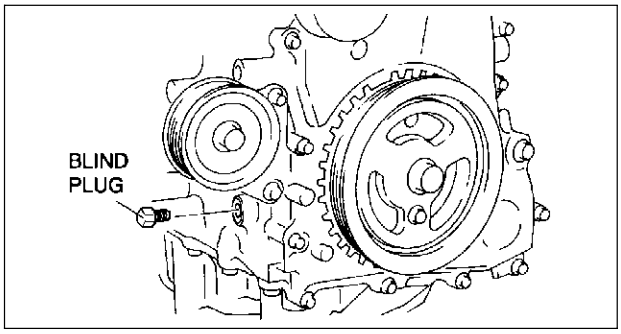

AME2212W012

Cylinder Head Cover Installation Note

1. Apply silicone sealant to the mating faces as shown.

Caution
- **Install the cylinder head cover within 10 minutes of applying the silicone sealant.**

Dot diameter:
4.0—6.0 mm {0.16—0.23 in}

2. Install the cylinder head cover with a new gasket.

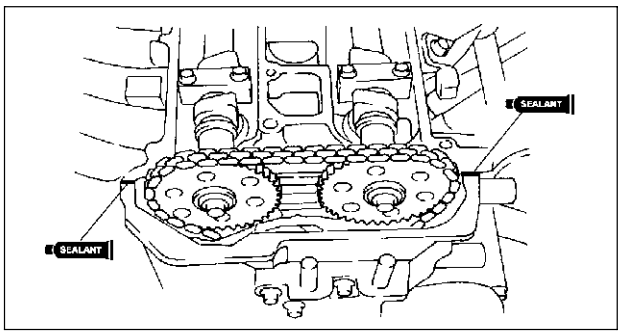

AME2215W014

3. Tighten the bolts in the order shown.

Tightening torque:
8.0—11.5 N·m {81.6—122.3 kgf·cm, 70.9—106.2 in·lbf}

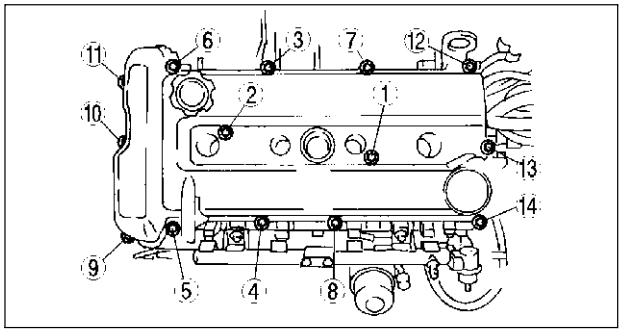

AME2215W015

CYLINDER HEAD GASKET

CYLINDER HEAD GASKET REPLACEMENT

A6E221810271W01

Warning
- **Fuel vapor is hazardous. It can very easily ignite, causing serious injury and damage. Always keep sparks and flames away from fuel.**
- **Fuel line spills and leakage are dangerous. Fuel can ignite and cause serious injuries or death and damage. Fuel can also irritate skin and eyes. To prevent this, always complete the "Fuel Line Safety Procedure". (See F–17 Fuel Line Safety Procedure.)**

1. Remove the timing chain. (See B–10 TIMING CHAIN REMOVAL/INSTALLATION.)
2. Remove the ignition coil. (See G–8 IGNITION COIL REMOVAL/INSTALLATION.)
3. Remove the high-tension lead. (See G–11 HIGH-TENSION LEAD REMOVAL/INSTALLATION.)
4. Disconnect the generator, but do not remove it from the vehicle. After disconnection, fix the generator using a rope to prevent it from falling. (See G–6 GENERATOR REMOVAL/INSTALLATION.)
5. Remove the front pipe. (See F–35 EXHAUST SYSTEM REMOVAL/INSTALLATION.)
6. Remove the intake manifold. (See F–10 INTAKE-AIR SYSTEM REMOVAL/INSTALLATION.)
7. Disconnect the heater hose, bypass hose, radiator hose.
8. To firmly support the engine, first set the engine jack and attachment to the oil pan.

Note
- A: MA-1
- B: M18MA

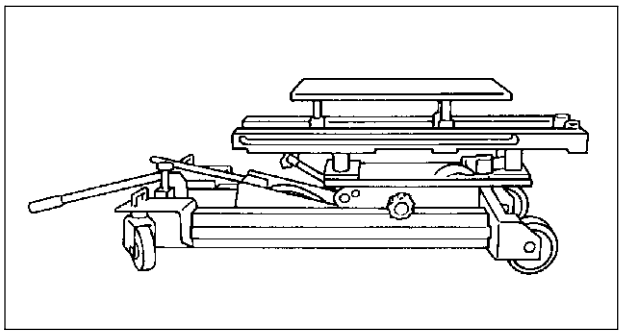
AME2218W001

9. Remove in the order indicated in the table.
10. Install in the reverse order of removal.
11. Inspect the compression. (See B–9 COMPRESSION INSPECTION.)

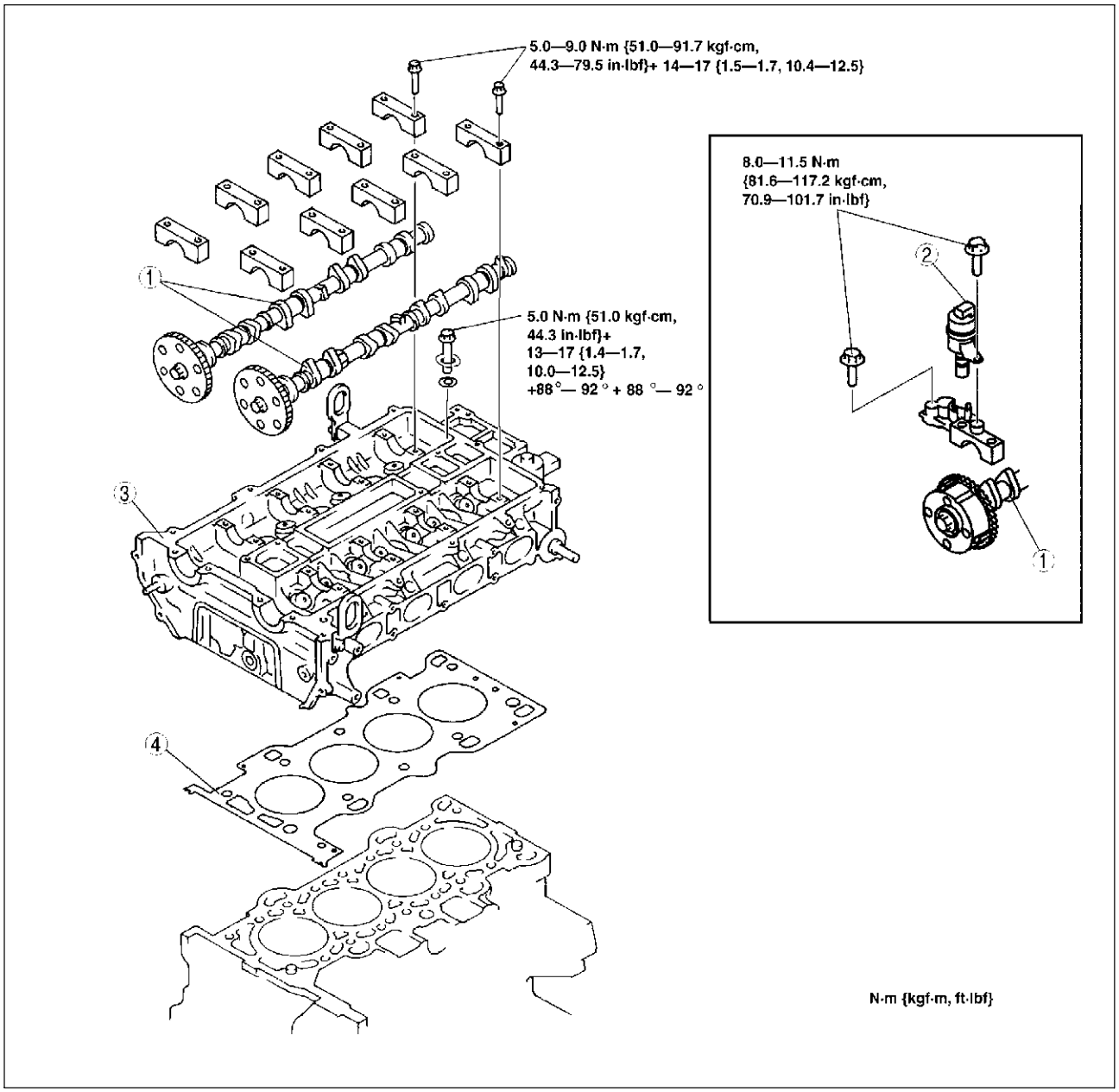

AME2218W002

1	Camshaft (See B–19 Camshaft Removal Note) (See B–21 Camshaft Installation Note)
2	Oil control valve (OCV) (L3)

3	Cylinder head (See B–20 Cylinder Head Removal Note) (See B–20 Cylinder Head Installation Note)
4	Cylinder head gasket

Camshaft Removal Note

Note

- The cylinder head and the camshaft caps are numbered to make sure they are reassembled in their original position. When removed, keep the caps with the cylinder head they were removed from. Do not mix the caps.

1. Loosen the camshaft cap bolts in several passes in the order shown.

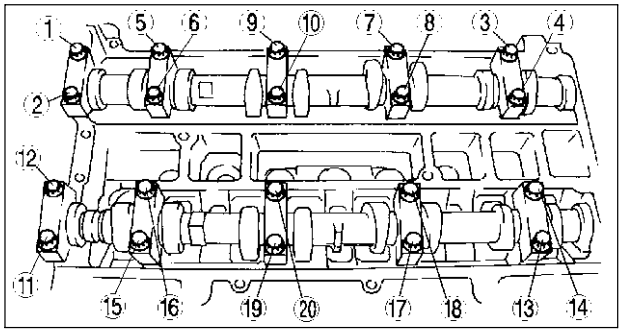

AME2212W008

Cylinder Head Removal Note

1. Loosen the cylinder head bolts in several passes in the order shown.

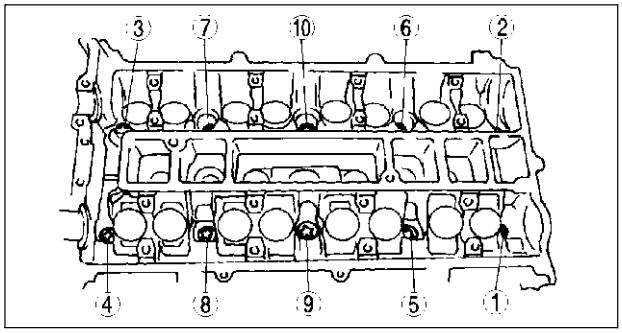

AME2218W003

Cylinder Head Installation Note

1. Measure the length of each cylinder head bolt.
   - Replace any that exceed maximum length.

   Length L:
   149.0—150.0 mm {5.867—5.905 in}

   Maximum:
   150.5 mm {5.965 in}

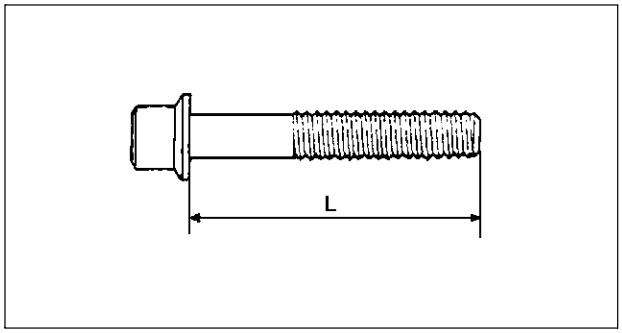

AME2218W004

2. Tighten the cylinder head bolts in the order shown using the following 5 steps.
   (1) Tighten to **5.0 N·m {51.0 kgf·cm, 44.2 in·lbf}**
   (2) Tighten **13—17 N·m {1.4—1.7 kgf·m, 10.0—12.5 ft·lbf}**
   (3) Tighten **44—46 N·m {4.5—4.6 kgf·m, 32.5—33.9 ft·lbf}**
   (4) Tighten **88°—92°**
   (5) Tighten **88°—92°**

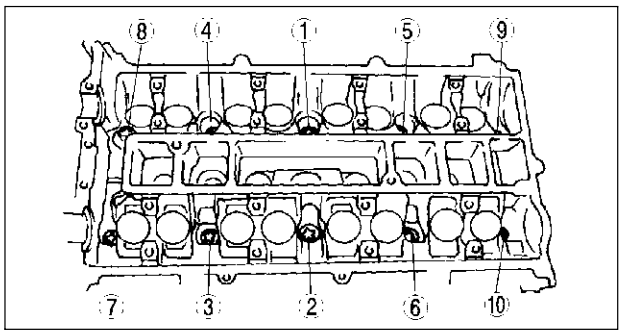

AME2218W005

Camshaft Installation Note

1. Set the cam position of the No.1 cylinder at the top dead center (TDC) and install the camshaft.
2. Temporarily tighten the camshaft bearing caps in two or three even movements.
3. Tighten the camshaft cap bolts in the order shown using the following two steps.
   (1) Tighten to **5.0—9.0 N·m {51.0—91.7 kgf·cm, 44.6—79.5 in·lbf}**
   (2) Tighten to **14.0—17.0 N·m {1.5—1.7 kgf·m, 10.4—12.5 ft·lbf}**

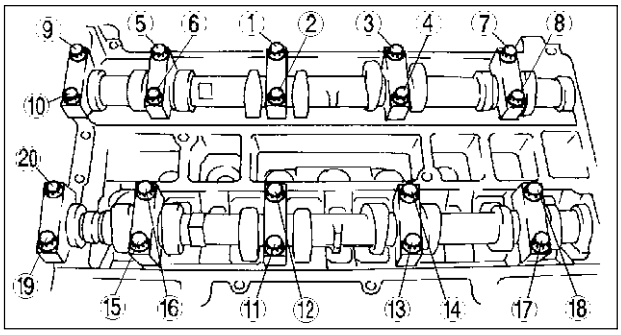

AME2212W009

FRONT OIL SEAL

FRONT OIL SEAL REPLACEMENT

A6E222010602W01

1. Disconnect the negative battery cable.
2. Remove the spark plugs. (See G–10 SPARK PLUG REMOVAL/INSTALLATION.)
3. Remove the Cylinder head cover. (See B–17 Cylinder Head Cover Installation Note.)
4. Remove the drive belt. (See B–3 DRIVE BELT REPLACEMENT.)
5. Remove the front drive shaft (RH) from the joint shaft. (See M–17 DRIVE SHAFT REMOVAL/INSTALLATION.)
6. Remove the CKPsensor.(See F–54 CRANKSHAFT POSITION (CKP) SENSOR REMOVAL/INSTALLATION.)
7. Remove in the order indicated in the table.
8. Install in the reverse order of removal.

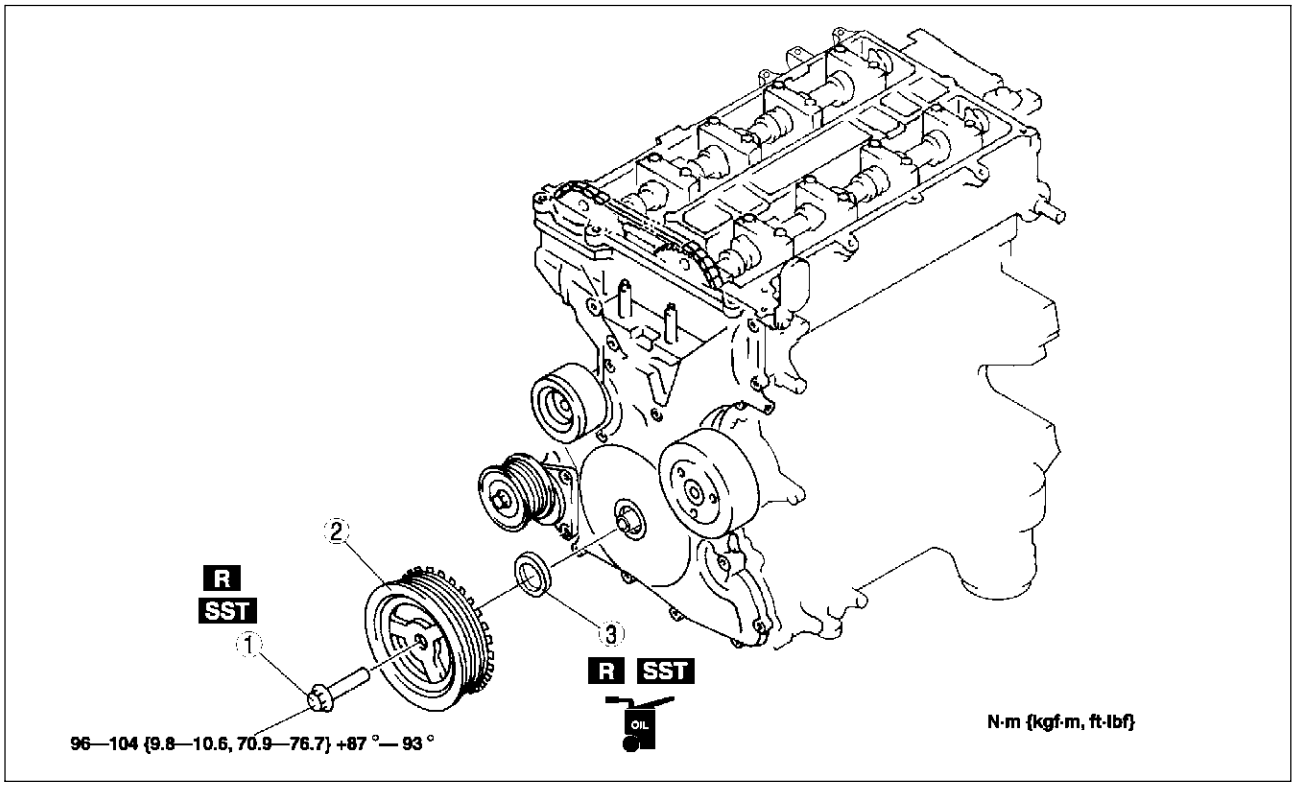

AME2220W001

1	Crankshaft pulley lock bolt (See B–22 Crankshaft Pulley Lock Bolt Removal Note) (See B–23 Crankshaft Pulley Lock Bolt Installation Note)

2	Crankshaft pulley
3	Front oil seal (See B–22 Front Oil Seal Removal Note) (See B–23 Front Oil Seal Installation Note)

Crankshaft Pulley Lock Bolt Removal Note

1. Remove the cylinder block lower blind plug.
2. Install the **SST**.
3. Turn the crankshaft clockwise the crankshaft is in the No.1 cylinder TDC position.

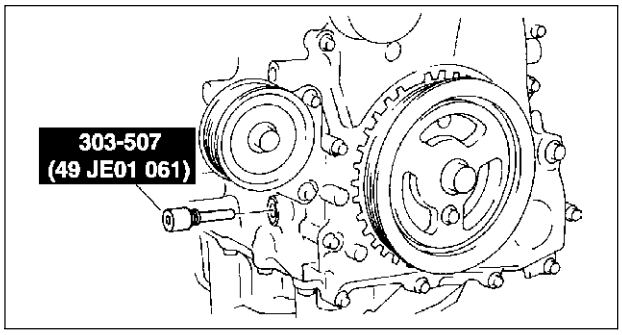

AME2212W004

4. Hold the crankshaft pulley by using the **SSTs**.

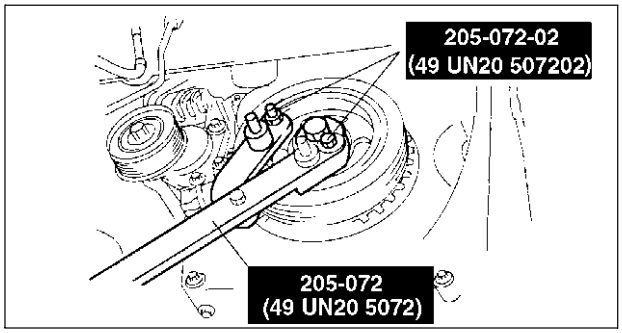

AME2215W002

Front Oil Seal Removal Note

1. Cut the oil seal lip using a razor knife.
2. Remove the oil seal using a screwdriver protected with a rag.

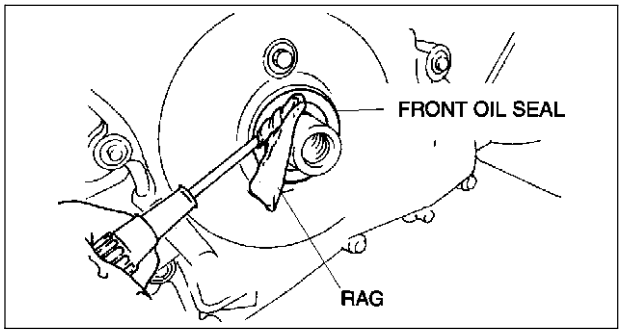

AME2220W002

Front Oil Seal Installation Note

1. Apply clean engine oil to the oil seal lip.
2. Push the oil seal slightly in by hand.
3. Tap the oil seal in evenly using the **SST** and a hammer.

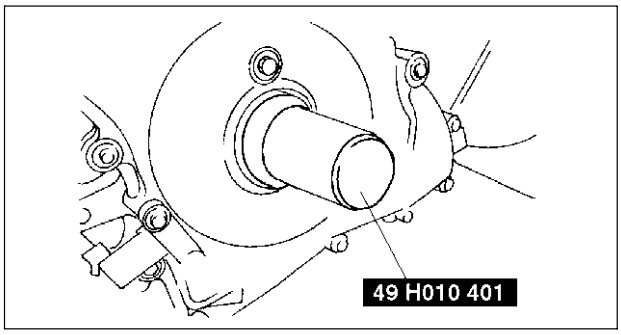

AME2215W009

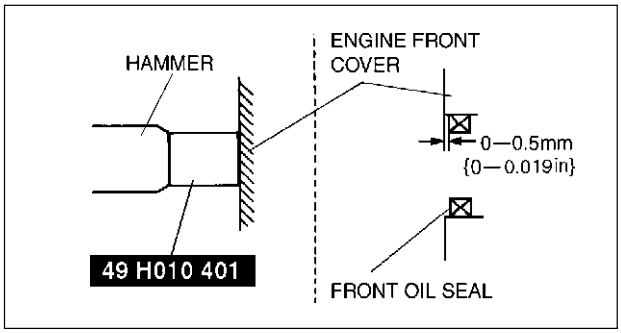

AME2215W010

Crankshaft Pulley Lock Bolt Installation Note

1. Install the **SST** to the camshaft as shown.

European countries

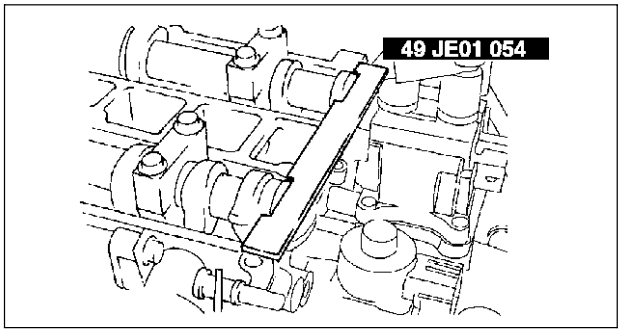

AME2212W010

Except European countries

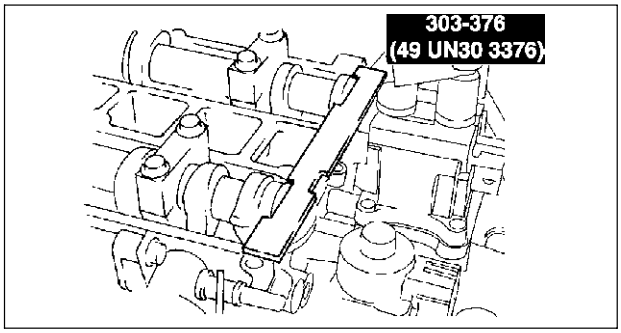

AME2212W011

2. Install the **M6 x 1.0 bolt** in by hand.
3. Turn the crankshaft clockwise the crankshaft is in the No.1 cylinder TDC position.

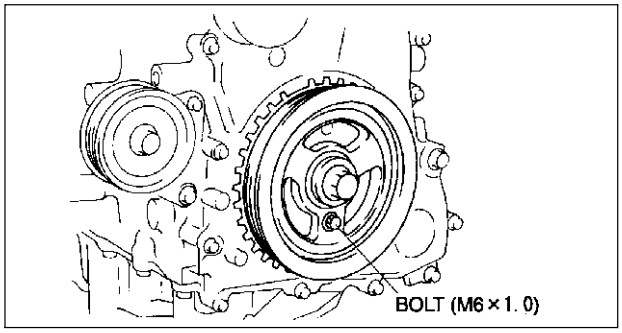

AME2215W013

4. Hold the crankshaft pulley by using the **SSTs**.
5. Tighten the crankshaft pulley lock bolt in the order shown using the following two steps.
   (1) Tighten to **96—104 N·m {9.8—10.6 kgf·m, 70.9—76.7 ft·lbf}**
   (2) Tighten **87°—93°**
6. Remove the M6 x 1.0 bolt.
7. Remove the **SST** from the camshaft.
8. Remove the **SST** from the cylinder block lower blind plug.
9. Rotate the crankshaft clockwise two turns until the TDC position.
   - If not aligned, loosen the crankshaft pulley lock bolt and repeat from Step 1.
10. Install the cylinder block lower blind plug.

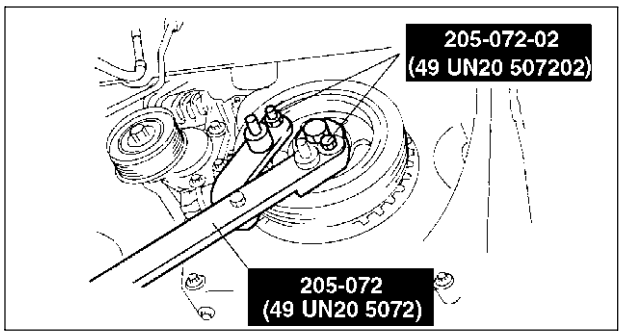

AME2215W002

Tightening torque:
18—22 N·m {1.9—2.2 kgf·m, 13.3—16.2 ft·lbf}

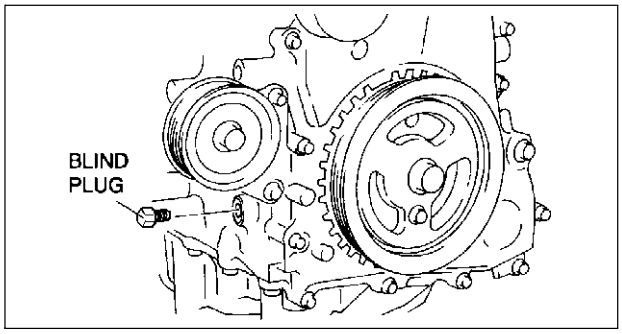

AME2212W012

REAR OIL SEAL

REAR OIL SEAL REPLACEMENT

A6E222211399W01

1. Remove the flywheel. (MTX) (See H–11 CLUTCH UNIT REMOVAL/INSTALLATION)
2. Remove the drive plate. (ATX) (See K–43 DRIVE PLATE REMOVAL/INSTALLATION)
3. Remove in the order indicated in the table.
4. Install in the reverse order of removal.

1	Bolt
2	Rear oil seal (See B–25 Rear Oil Seal Installation Note)

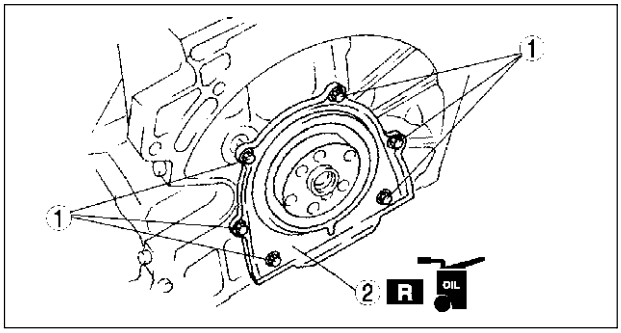

AME2222W001

Rear Oil Seal Installation Note

1. Apply silicone sealant to the mating faces as shown.

   Dot diameter:
   4.0—6.0 mm {0.16—0.23 in}

2. Apply clean engine oil to the new oil seal lip.

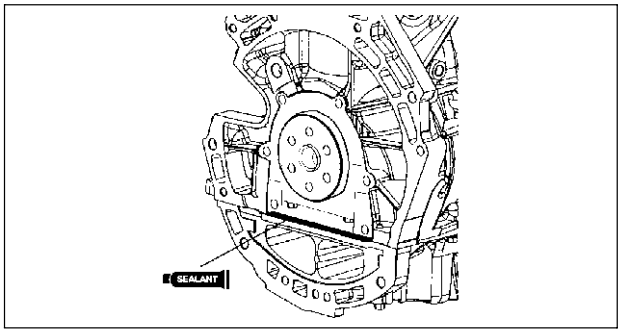

AME2222W002

3. Install the rear oil seal using the installer as shown.

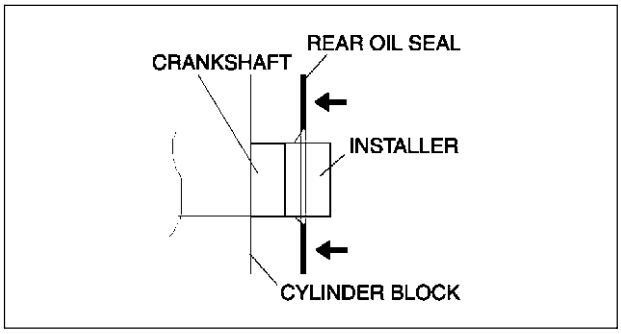

AME2224E326

4. Tighten the rear oil seal bolts in the order as shown.

   Tightening torque:
   8.0—11.5 N·m {81.6—117.2 kgf·m, 70.9—101.7 in·lbf}

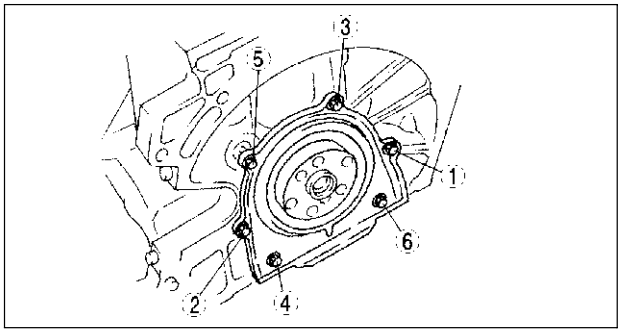

AME2222W004

ENGINE

ENGINE REMOVAL/INSTALLATION

A6E222401001W01

Warning

- **Fuel vapor is hazardous. It can very easily ignite, causing serious injury and damage. Always keep sparks and flames away from fuel.**
- **Fuel line spills and leakage are dangerous. Fuel can ignite and cause serious injures or death and damage. Fuel can also irritate skin and eyes. To prevent this, always complete the "Fuel Line Safety Procedure". (See F–17 Fuel Line Safety Procedure.)**

1. Remove the battery. (See G–3 BATTERY REMOVAL/INSTALLATION.)
2. Remove the battery tray. (See G–3 BATTERY REMOVAL/INSTALLATION.)
3. Remove the radiator. (See E–6 RADIATOR REMOVAL/INSTALLATION.)
4. Drain the missions oil.
5. Remove the P/S oil pump with the oil hose still connected and position the P/S oil pump so that it is out of the way. (SeeN–22 POWER STEERING OIL PUMP REMOVAL/INSTALLATION)
6. Remove the A/C compressor with the pipes still connected. Position the A/C compressor so that it is out of the way. Use wire or rope to secure.
7. Remove the joint shaft from the front drive shaft. (See M–17 DRIVE SHAFT REMOVAL/INSTALLATION.)
8. Remove the air cleaner, intake air duct, accelerator cable and bracket, and vacuum hose. (See F–10 INTAKE-AIR SYSTEM REMOVAL/INSTALLATION.)
9. Remove the ATF filter and selector cable. (ATX) (See K–29 AUTOMATIC TRANSAXLE REMOVAL/INSTALLATION.)
10. Remove the vacuum hose and heater hose.
11. Remove the release cylinder and control cable. (MTX) (See J–5 MANUAL TRANSAXLE REMOVAL/INSTALLATION.)
12. Remove the plastic fuel hose. (See F–23 Plastic Fuel Hose Removal Note.) (See F–24 Plastic Fuel Hose Installation Note.)
13. Disconnect the wiring harness from the engine side.
14. Remove the front pipe. (See F–35 EXHAUST SYSTEM REMOVAL/INSTALLATION.)
15. Remove in the order indicated in the table.
16. Install in the reverse order of removal.
17. Start the engine and:
    - Inspect for the engine oil, engine coolant, transaxle oil and fuel leakage.
    - Verify the ignition timing, idle speed and idle mixture. (See F–8 IGNITION TIMING INSPECTION.) (SeeF–9 IDLE MIXTURE INSPECTION.)
18. Perform a road test.

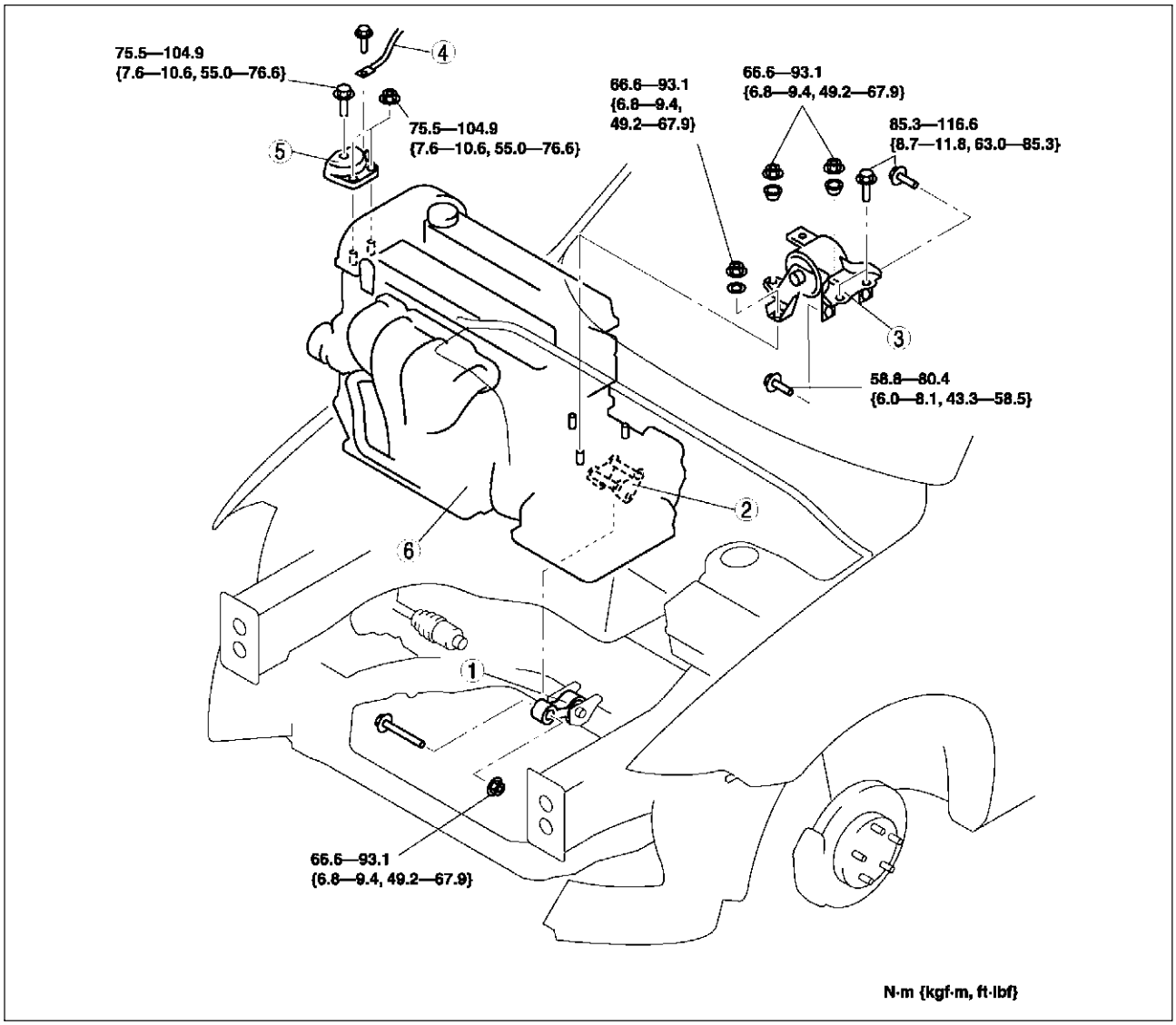

AME2213W001

1	No.1 Engine mount rubber (See B–28 No.1 Engine Mount Rubber Removal Note) (See B–31 No.1 Engine Mount Rubber Installation Note)
2	No.1 Engine mount bracket (See B–31 No.1 Engine Mount Bracket Installation Note)

3	No.4 Engine mount bracket and No.4 Engine mount rubber (See B–28 No.4 Engine Mount Bracket and No.4 Engine Mount Rubber Removal Note) (See B–30 No.4 Engine Mount Bracket and No.4 Engine Mount Rubber Installation Note)
4	Engine ground
5	No.3 Engine joint bracket (See B–29 No.3 Engine Joint Bracket Installation Note)
6	Engine, transaxle

No.1 Engine Mount Rubber Removal Note

1. Suspend the engine using the **SSTs**.
2. Remove the through bolt A on the No.1 engine mount bracket side.

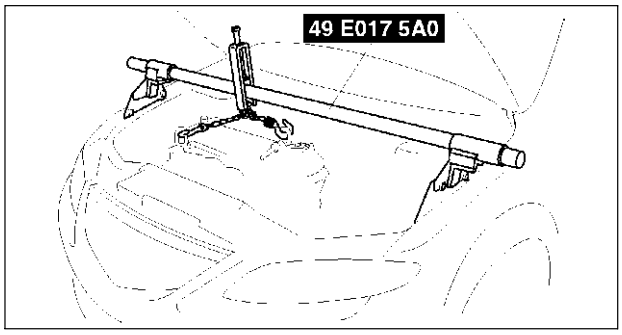

AME2215W004

3. Loosen the through bolt B on the chassis side until approximately three pitches are showing.

Note

- Do not remove the No.1 engine mount rubber from the vehicle.

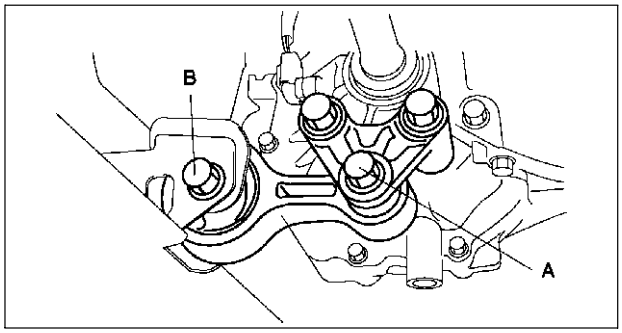

AME2213W002

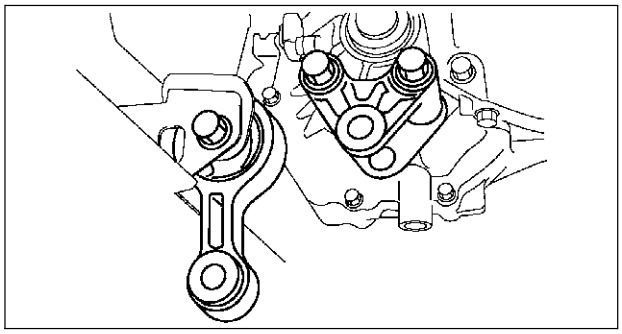

AME2213W003

No.4 Engine Mount Bracket and No.4 Engine Mount Rubber Removal Note

1. Secure the engine and the transaxle using an engine jack and attachment as shown.

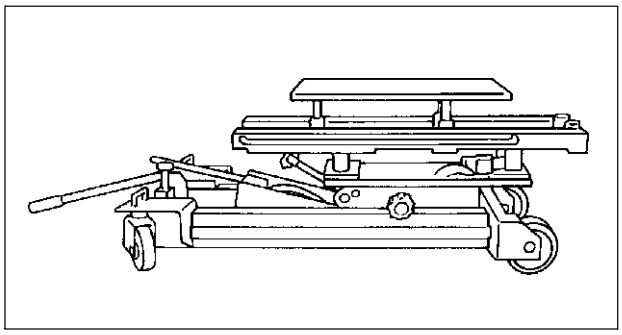

AME2218W001

2. Remove the **SST**.

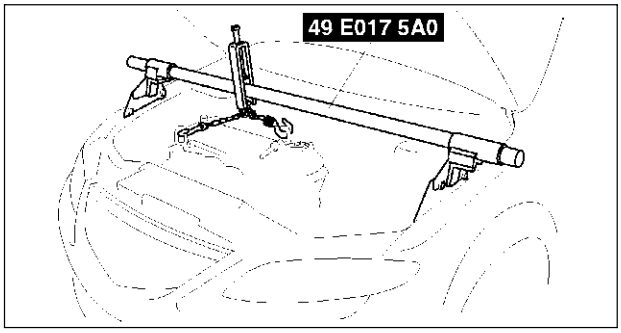

AME2215W004

3. Secure the engine and the transaxle using a hoist.

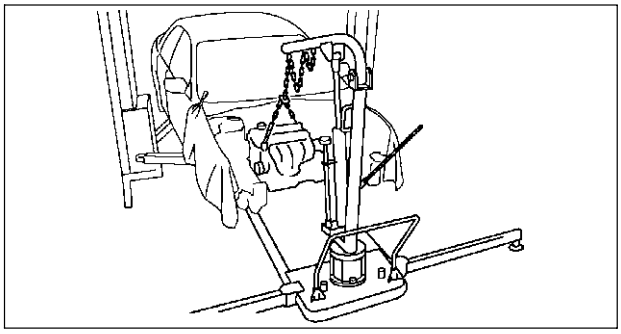

AME2213W004

4. No.4 engine mount bracket and engine mount rubber together in one piece.

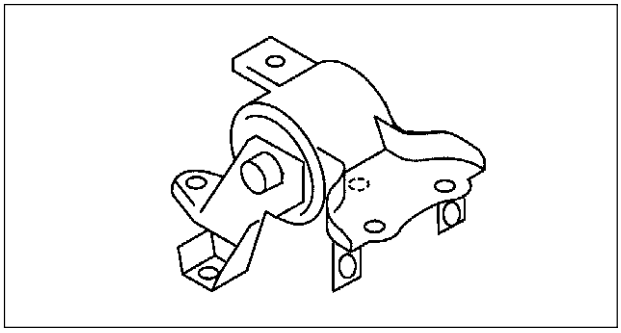

AME2213W005

No.3 Engine Joint Bracket Installation Note

1. Tighten the No.3 engine mount bracket stud bolt.

   Tightening torque:
   7.0—13 N·m {71.4—132.5 kgf·cm, 62.0—115.0 in·lbf}

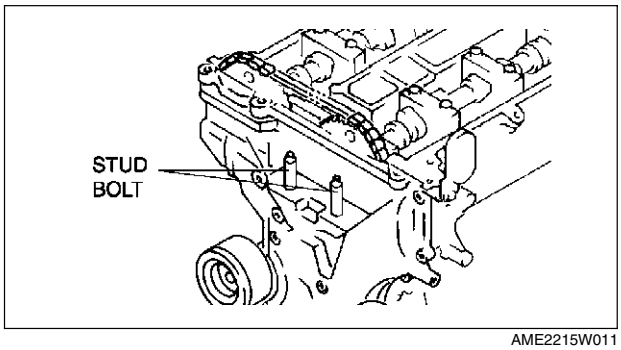

AME2215W011

2. Tighten the No.3 engine joint bracket bolt and nut in the order shown.

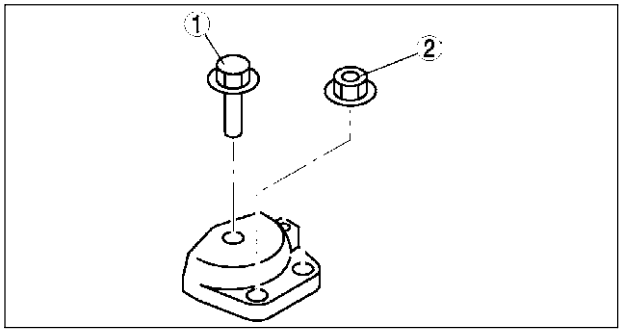

AME2213W010

No.4 Engine Mount Bracket and No.4 Engine Mount Rubber Installation Note

1. Tighten the No.4 engine mount bracket and No.4 engine mount rubber bolt and nut in the order as shown.

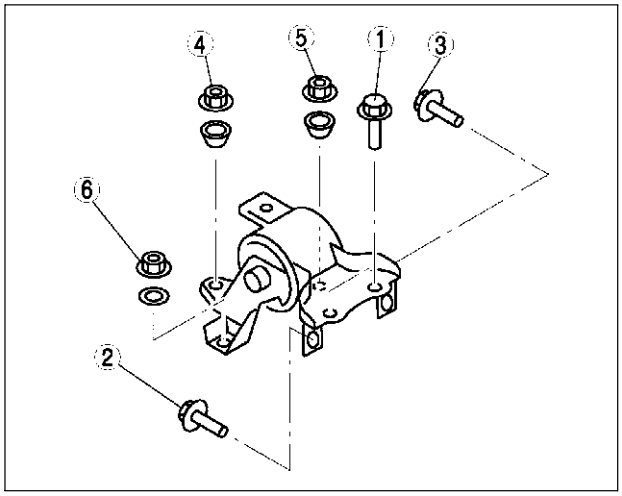

AME2213W011

2. Secure the engine and the transaxle using an engine jack and attachment as shown.

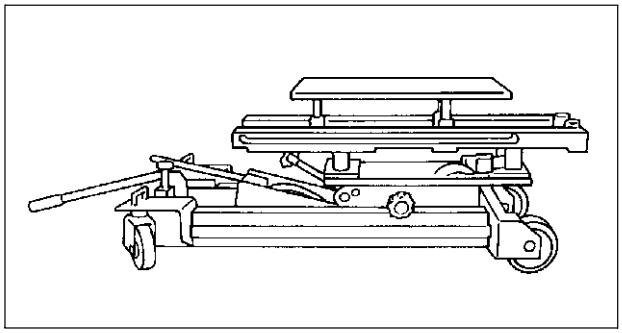

AME2218W001

3. Remove the hoist and secure the engine and transaxle using **SST**.

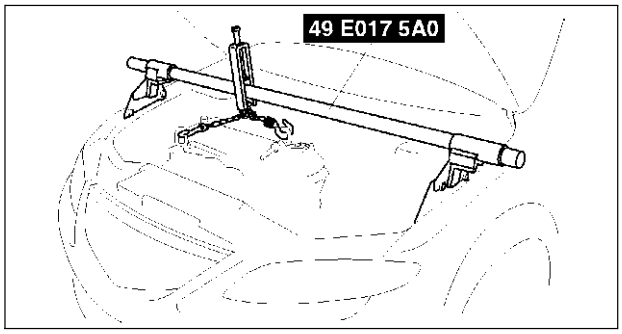

AME2215W004

No.1 Engine Mount Bracket Installation Note

1. Tighten No.1 engine mount bracket bolt A.

   Tightening torque:
   93.1—116.6 N·m {9.50—11.88 kgf·m, 68.72—85.92 ft·lbf}

2. Tighten No.1 engine mount bracket bolt B.

   Tightening torque:
   93.1—116.6 N·m {9.50—11.88 kgf·m, 68.72—85.92 ft·lbf}

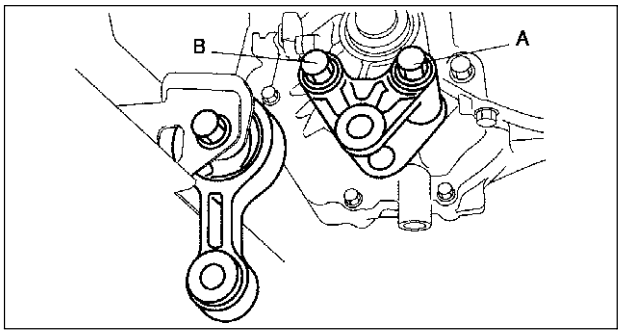

AME2213W008

No.1 Engine Mount Rubber Installation Note

1. Tighten through bolt A on No.1 engine mount bracket.

   Tightening torque:
   85.3—116.6 N·m {8.7—11.88 kgf·m, 62.93—85.92 ft·lbf}

2. Tighten through bolt B on chassis side.

   Tightening torque:
   93.1—116.6 N·m {9.50—11.88 kgf·m, 68.72—85.92 ft·lbf}

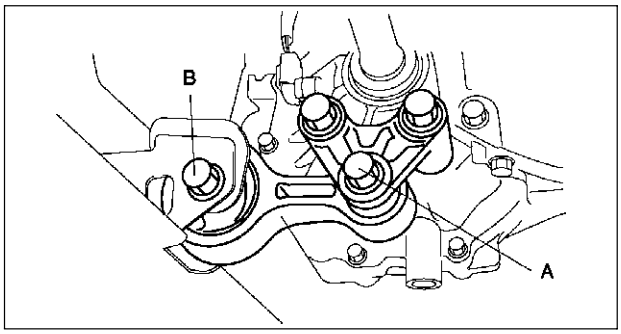

AME2213W009

ENGINE DISASSEMBLY/ASSEMBLY

A6E222401001W02

1. Disconnect the engine and automatic transaxle. (ATX) (See K–29 AUTOMATIC TRANSAXLE REMOVAL/INSTALLATION.)
2. Disconnect the engine and manual transaxle. (MTX) (See J–5 MANUAL TRANSAXLE REMOVAL/INSTALLATION.)
3. Remove the intake-air system. (See F–10 INTAKE-AIR SYSTEM REMOVAL/INSTALLATION.)
4. Remove the exhaust system. (See F–35 EXHAUST SYSTEM REMOVAL/INSTALLATION.)
5. Remove the generator.
6. Remove the ignition coils. (See G–8 IGNITION COIL REMOVAL/INSTALLATION.)
7. Remove the CKP sensor. (See F–54 CRANKSHAFT POSITION (CKP) SENSOR REMOVAL/INSTALLATION.)
8. Assemble in the reverse order of disassembly.

VARIABLE VALVE TIMING

VARIABLE VALVE TIMING ACTUATOR INSPECTION

A6E222500142W01

L3

Caution
- **Variable valve timing actuator can not be disassembled it is a precision unit.**

1. Disconnect the negative battery cable.
2. Remove the plug hole plate.
3. Remove the high-tension lead.
4. Remove the oil control valve connector.
5. Remove the ventilation hose.
6. Remove the cylinder head cover.
7. Confirm that notch of the rotor and bump of the cover at the variable valve timing actuator are aligned and fitted.
   - If the notch and the bump are not aligned, turn the crankshaft clockwise two rotations. Verify that the bump and the notch are aligned.
   - If the bump and notch are still not aligned, replace the variable valve timing actuator.
   - If, when turning the crankshaft, there is a hitting noise from the variable valve timing actuator each time the cam passes the fully lifted position, it means that the actuator is not secured. Replace the actuator.

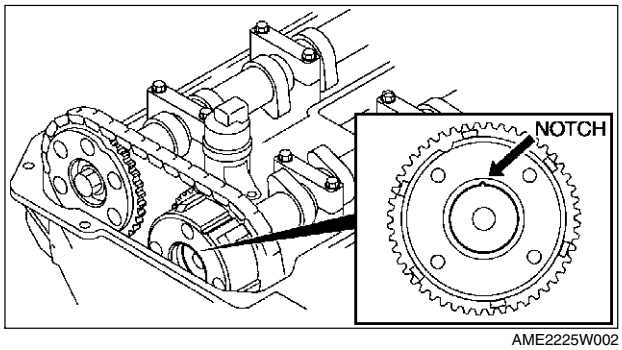

AME2225W002

8. Install the cylinder head cover. (See B–17 Cylinder Head Cover Installation Note.)
9. Install the ventilation hose.
10. Install the oil control valve connector.
11. Install the high-tension lead. (See G–11 HIGH-TENSION LEAD REMOVAL/INSTALLATION.)
12. Install the spark plugs. (See G–10 SPARK PLUG REMOVAL/INSTALLATION.)
13. Installs plug hole plate.

VARIABLE VALVE TIMING ACTUATOR REMOVAL/INSTALLATION

A6E222500142W02

L3

Caution
- **Variable valve timing actuator can not be disassembled because it is a precision unit.**

Note
- Variable valve timing actuator camshaft sprocket is integrated with the variable valve timing actuator and cannot be disassembled.

1. Follow the timing chain removal/installation procedure from 1 to 13 and remove the timing chain. (See B–10 TIMING CHAIN REMOVAL/INSTALLATION.)
2. Remove in the order indicated in the table.
3. Install in the reverse order of removal.

1	Variable valve timing actuator (See B–33 Variable Valve Timing Actuator Removal Note) (See B–33 Variable Valve Timing Actuator Installation Note)

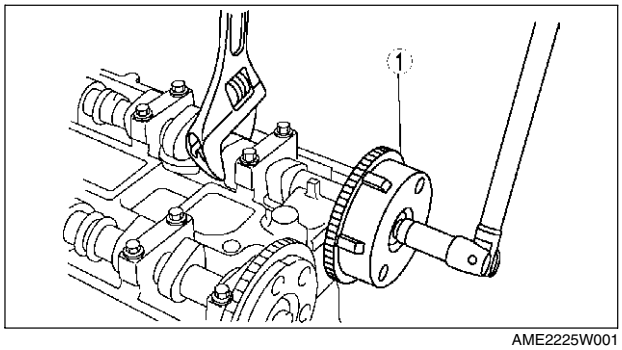

AME2225W001

Variable Valve Timing Actuator Removal Note
1. Set a wrench or equivalent tool at the hexagonal part of the camshaft to prevent rotation.
2. Loosen the variable valve timing actuator tightening bolts.

Variable Valve Timing Actuator Installation Note
1. Set a wrench or equivalent tool at the hexagonal part of the camshaft to prevent rotation.
2. Tighten variable valve timing actuator tightening bolts.

Tightening torque
69—75N·m {7.10—7.6 kgf·m, 50.9—55.3 ft·lbf}

OIL CONTROL VALVE (OCV)

OIL CONTROL VALVE (OCV) REMOVAL/INSTALLATION

A6E222614420W01

L3
1. Disconnect the negative battery cable.
2. Remove the plug hole plate.
3. Remove the high-tension lead. (See G–11 HIGH-TENSION LEAD REMOVAL/INSTALLATION.)
4. Remove the oil control valve (OCV) connector.
5. Remove the ventilation hose.
6. Remove the cylinder head cover. (See B–17 Cylinder Head Cover Installation Note.)
7. Remove in the order indicated in the table.
8. Install in the reverse order of removal.

1	Oil control valve (OCV)

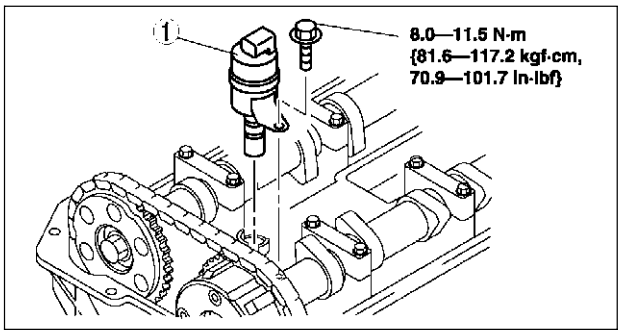

AME2226W001

OIL CONTROL VALVE (OCV) INSPECTION

A6E222614420W02

L3

Coil Resistance Inspection
1. Disconnect the negative battery cable.
2. Disconnect the oil control valve connector.
3. Measure the resistance between terminals A and B using an ohmmeter.
   - If not as specified, replace the oil control valve.

Specification
6.9—7.9 ohms

4. Connect the oil control valve connector.

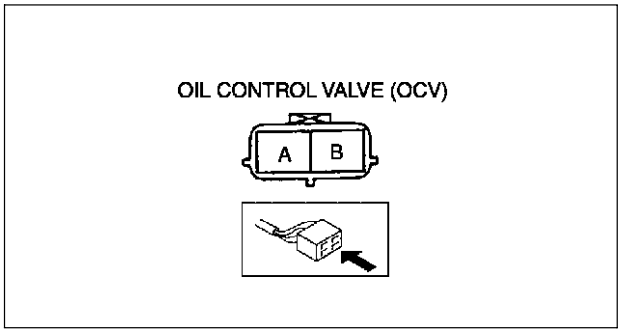

AME2226W002

Spool Valve Operation Inspection

1. Disconnect the negative battery cable.
2. Remove the oil control valve.
3. Verify that the spool valve in the oil control valve is in the maximum valve timing retard position as indicated in the figure.
   - If not as specified, replace the oil control valve.
4. Verify that the battery is fully charged.
   - If not as specified, recharge the battery.
5. Apply battery positive voltage between the oil control valve terminals and verify that the spool valve operates and moves to the maximum valve timing advance position.
   - If not as specified, replace the oil control valve.

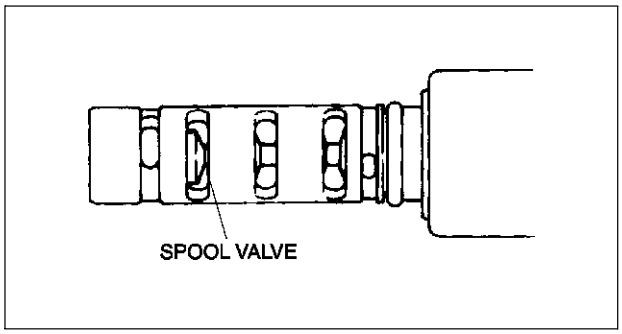

AME2226W003

Note

- When applying battery positive voltage between the oil control valve terminals, the connection can be either of the following:
  — Positive battery cable to terminal A, negative battery cable to terminal B
  — Positive battery cable to terminal B, negative battery cable to terminal A

6. Stop applying battery positive voltage and verify that the spool valve returns to the maximum valve timing retard position.
   - If not as specified, replace the oil control valve.

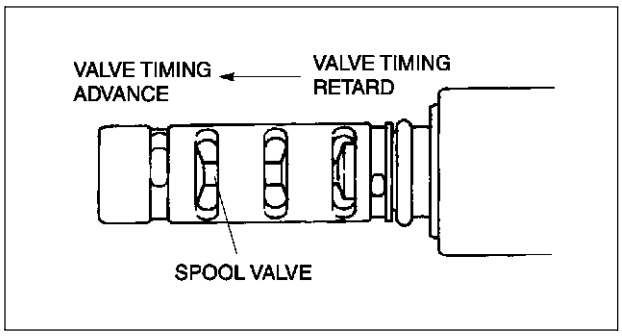

AME2226W004

LUBRICATION SYSTEM

LOCATION INDEX D-2
LOCATION INDEX D-2
OIL PRESSURE INSPECTION D-3
OIL PRESSURE INSPECTION D-3
ENGINE OIL D-4
ENGINE OIL INSPECTION D-4
ENGINE OIL REPLACEMENT D-4
OIL FILTER D-6
OIL FILTER REPLACEMENT D-6
OIL COOLER D-7
OIL COOLER REMOVAL/INSTALLATION D-7
OIL PAN D-8
OIL PAN REMOVAL/INSTALLATION D-8
OIL PUMP D-10
OIL PUMP REMOVAL/INSTALLATION D-10

LOCATION INDEX

LOCATION INDEX

A6E330001002W01

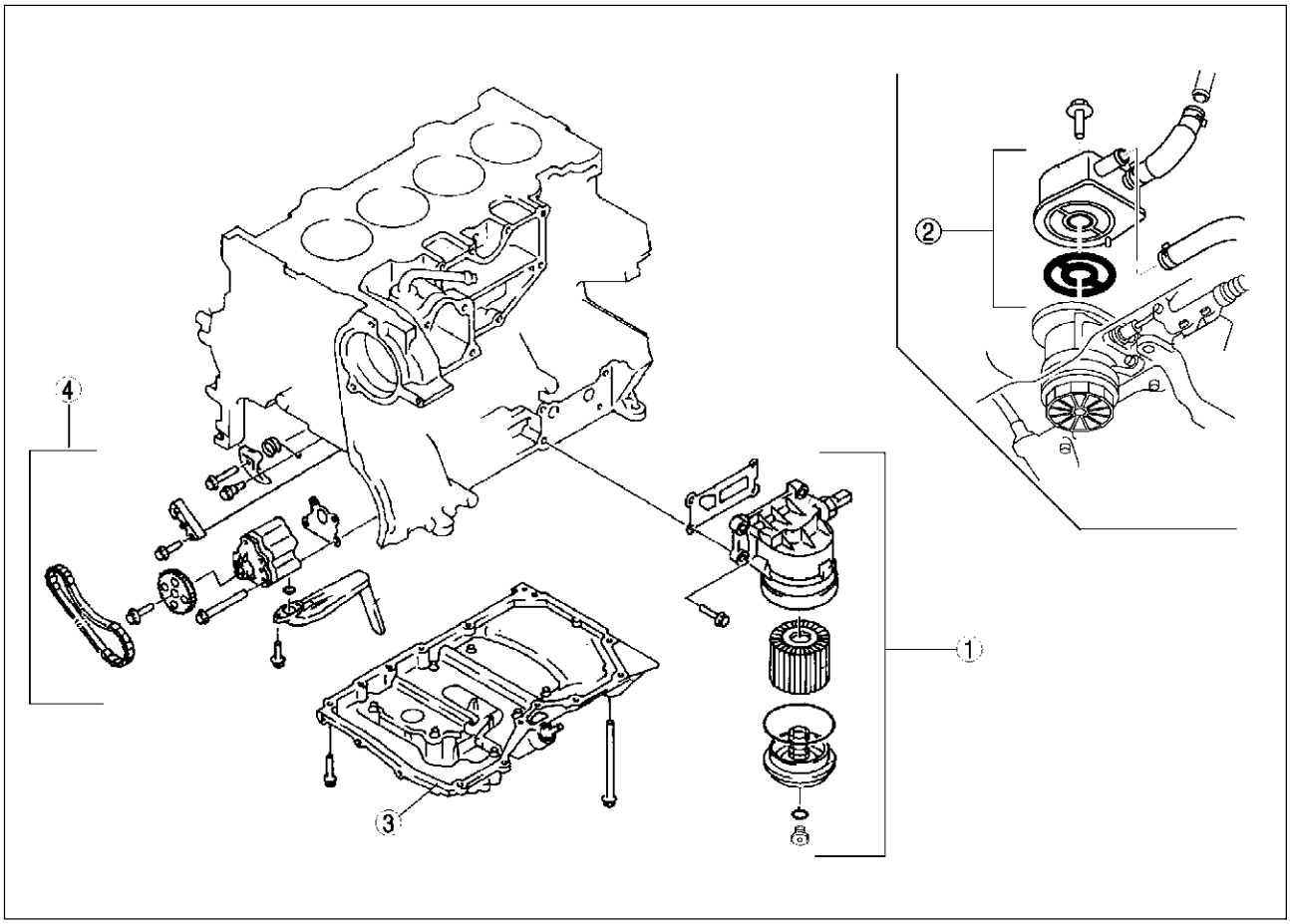

AME3300W001

1	Oil filter (See D–6 OIL FILTER REPLACEMENT)
2	Oil cooler (LF and L3 engine models) (See D–7 OIL COOLER REMOVAL/INSTALLATION)

3	Oil pan (See D–8 OIL PAN REMOVAL/INSTALLATION)
4	Oil pump (See D–10 OIL PUMP REMOVAL/INSTALLATION)

OIL PRESSURE INSPECTION

OIL PRESSURE INSPECTION

A6E331001003W01

Warning
- **Continuous exposure to USED engine oil has caused skin cancer in laboratory mice. Protect your skin by washing with soap and water immediately after working with engine oil.**
- **Hot engines and engine oil can cause severe burns. Turn off the engine and wait until it and the engine oil have cooled.**

1. Remove the under cover.
2. Remove the oil pressure switch.
3. Screw the **SST** into the oil pressure switch installation hole.
4. Warm up the engine to normal operating temperature.
5. Run the engine at the specified speed, and note the gauge readings.
   - If the pressure is not as specified, inspect for the cause and repair or replace as necessary.

Note
- The oil pressure can vary with oil viscosity and temperature.

Oil pressure [Oil temperature: 100 °C{212°F}]:
L8, LF :
234—521 kPa {2.39—5.31 kgf/cm^2,33.9—75.5 psi} min. [3,000rpm]
L3 :
395—649 kPa {4.03—6.61 kgf/cm^2, 57.3—94.1 psi} min. [3,000rpm]

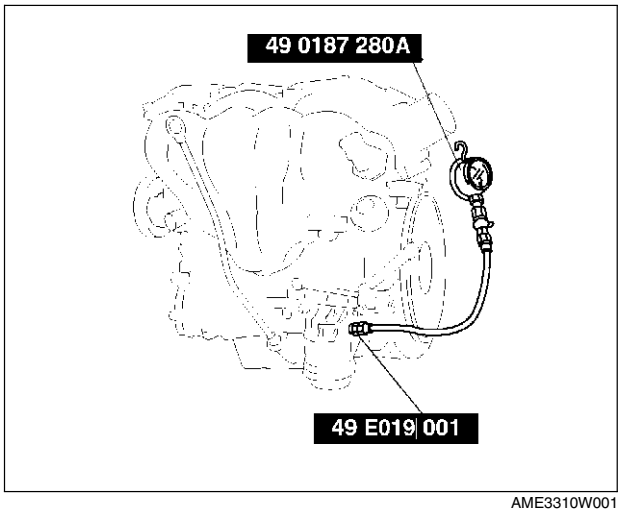

AME3310W001

6. Stop the engine and wait until it is cool.
7. Remove the **SST**.

Caution
- **Any sealant stuck at the end of the oil pressure switch can cause operation malfunction of the oil pressure switch.**
  Be sure there is no sealant at the end of the oil pressure switch.

8. Apply silicone sealant to the oil pressure switch threads as shown.
9. Install the oil pressure switch.

Tightening torque:
12—18 N·m {1.2—1.8 kgf·m, 9—13 ft·lbf}

10. Install the under cover.
11. Start the engine and inspect for oil leakage.
    - If the oil leaks, specify the faulty part and repair or replace it.

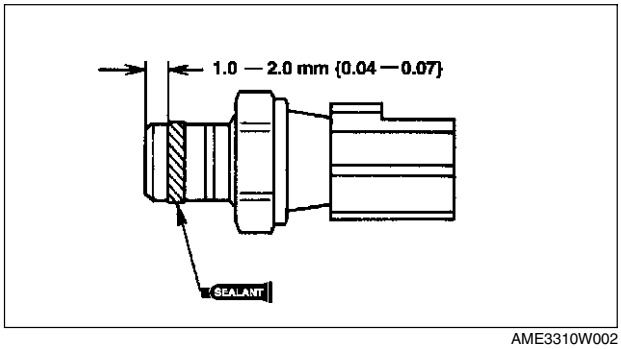

AME3310W002

ENGINE OIL

ENGINE OIL INSPECTION

A6E331214001W01

1. Position the vehicle on level ground.
2. Warm up the engine to normal operating temperature.
3. Stop the engine and wait for **5 min.**
4. Remove the dipstick.
5. Verify that the oil level is between the F and L marks on the dipstick and check the engine oil condition.
   - If the oil level is below the L mark, add the oil.

ENGINE OIL REPLACEMENT

A6E331214001W02

Warning

- **Hot engines and engine oil can cause severe burns. Turn off the engine and wait until it and the engine oil has cooled.**
- **A vehicle that is lifted but not securely supported on safety stands is dangerous. It can slip or fall, causing death or serious injury. Never work around or under a lifted vehicle if it is not securely supported on safety stands.**
- **Continuous exposure to USED engine oil has caused skin cancer in laboratory mice. Protect your skin by washing with soap and water immediately after working with engine oil.**

Caution

- **In case you spill engine oil on the front pipe, wipe it off completely. If you fail to wipe the spilled oil, it will produce a white smoke because of the heat.**

1. Position the vehicle on level ground.
2. Remove the oil filler cap and the oil pan drain plug and oil filter drain.
3. Drain the engine oil into a container.
4. Install the oil filter drain plug with the new O-ring.

Tightening torque (oil filter drain plug):
9—10 N·m {91.8—101.9 kgf·cm, 79.7—88.4 in·lbf}

5. Clean the flange surface (seal rubber) of the oil pan drain plug, then install the oil pan drain plug.

Tightening torque (oil pan drain plug):
25—30 N·m {2.6—3.0 kgf·m, 18.8—21.6 ft·lbf}

Note

- The amount of residual oil in the engine can vary according to the replacement method, oil temperature, etc. Verify the oil level after engine oil replacement.

6. Refill the engine with the specified type and amount of engine oil.

Oil capacity (Approximate quantity)

L {US qt, Imp qt}

Item	Engine		
	L8	LF	L3
Total (dry engine)	4.6 {4.8, 4.0}	4.6 {4.8, 4.0}	4.2 {4.4, 3.6}
Oil replacement	3.9 {4.0, 3.4}	3.9 {4.0, 3.0}	3.1 {3.3, 2.7}
Oil and oil filter replacement	4.3 {4.5, 3.8}	4.3 {4.5, 3.8}	3.5 {3.7, 3.1}

Note

- The maintenance intervals on scheduled maintenance table (See GI–33 SCHEDULED MAINTENANCE TABLE) can only be supported by the use of following oils.

Recommended engine oil

Item	Market		
	Europe		Except Europe
Grade	API SJ ACEA A1 or A3	API SL ILSAC GF-3	API SG, SH, SJ, SL ILSAC GF-2, GF-3
Viscosity (SAE)	5W-30	5W-20	40, 30, 20, 20W-20, 10W-30, 10W-40, 10W-50, 20W-40, 15W-40, 20W-50, 15W-50, 5W-20, 5W-30
Remarks	Mazda genuine DEXELIA oil	—	—

7. Refit the oil filler cap.
8. Run the engine and inspect for oil leakage.
9. Inspect the oil level.
   - If necessary, add oil. (See D–4 ENGINE OIL INSPECTION.)
10. Start the engine and inspect for oil leakage.
    - If the oil leaks, specify the faulty part and repair or replace it.

OIL FILTER

OIL FILTER REPLACEMENT

A6E331414300W01

For Europe (LF and L3 engine models)

Caution
- **To avoid damage to the oil filter, use only specified oil filter.**

1. Remove the oil filter drain plug.
2. Untighten the oil filter cover for 2 turns and drain the engine oil.

Note
- Oil could be easily drained when the air is in the filter.

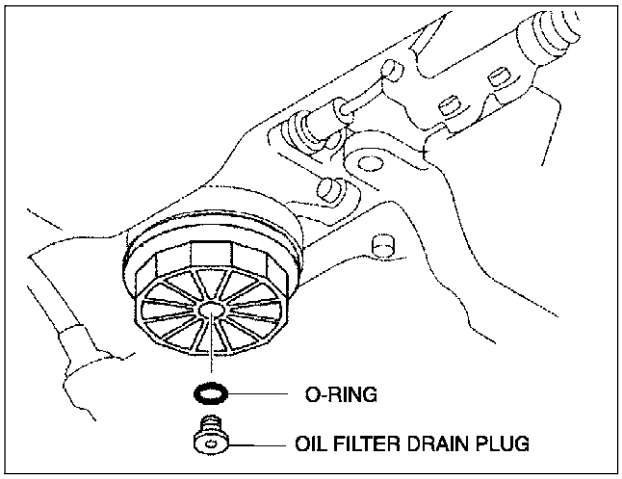

AME3314W001

3. Remove the oil filter.
4. Use a clean rag to wipe off the mounting surface on the oil filter adapter and the oil filter cover.
5. Apply clean oil to new O-ring of a new oil filter and a new oil filter drain plug.
6. Install the oil filter, oil filter drain plug, and oil filter cover.
7. Tighten the oil filter cover and oil filter drain plug.

Tightening torque:
Oil filter cover: 30—35 N·m {30.5—3.56 kgf·cm, 22.2—25.8 in·lbf}
Oil filter drain plug: 9.0—11 N·m {91.8—112.1 kgf·cm, 79.6—97.3 in·lbf}

8. Start the engine and inspect for oil leakage.
9. Inspect the oil level.
   - If necessary, add oil. (See D–4 ENGINE OIL INSPECTION.)

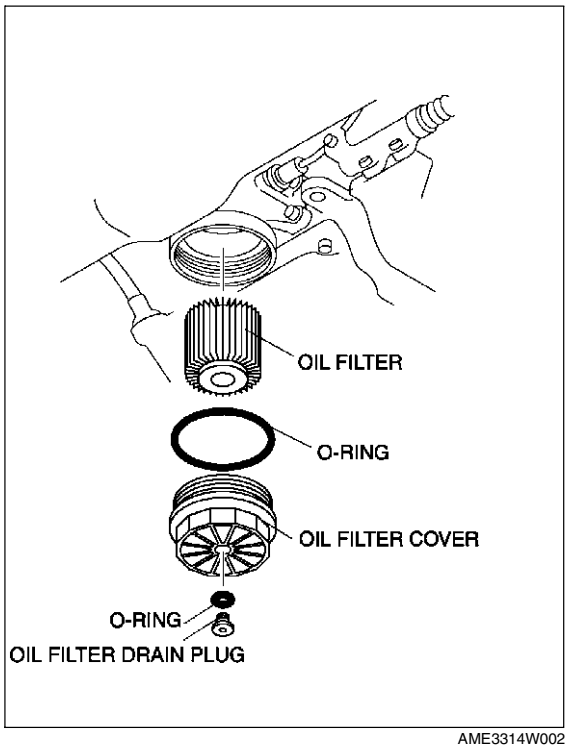

AME3314W002

OIL COOLER

OIL COOLER REMOVAL/INSTALLATION

A6E331819900W01

LF, L3

1. Remove the under cover.
2. Drain the engine coolant. (See E–3 ENGINE COOLANT REPLACEMENT.)
3. Remove the oil filter cover, and drain the engine oil into a container. (See D–6 OIL FILTER REPLACEMENT.)
4. Remove in the order indicated in the table.
5. Use a clean rag to wipe off the mounting surface on the oil cooler.
6. Install in the reverse order of removal.
7. Inspect the oil level.
   - If necessary, add oil. (See D–4 ENGINE OIL INSPECTION.)
8. Start the engine and inspect for oil leakage.
   - If the oil leaks, specify the faulty part and repair or replace it.

1	Water hose
2	Oil cooler

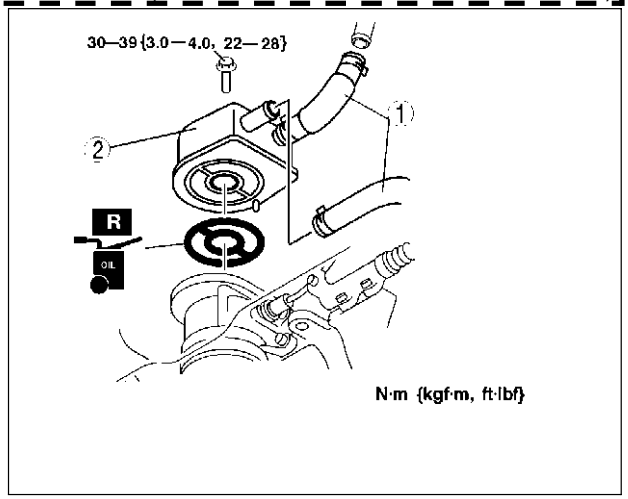

AME3318W002

OIL PAN

OIL PAN REMOVAL/INSTALLATION

A6E332010040W01

Warning

- **Hot engine and engine oil can cause severe burns. Turn off the engine and wait until it and the engine oil have cooled.**

1. Disconnect the negative battery cable.
2. Remove the under cover.
3. Drain the engine oil. (See D–4 ENGINE OIL REPLACEMENT.)
4. Remove the engine front cover. (See B–10 TIMING CHAIN REMOVAL/INSTALLATION.)
5. Remove in the order indicated in the table.
6. Install in the reverse order of removal.
7. Inspect the oil level. (See D–4 ENGINE OIL INSPECTION.)
8. Start the engine and inspect for oil leakage.
   - If the oil leaks, specify the faulty part and repair or replace it.

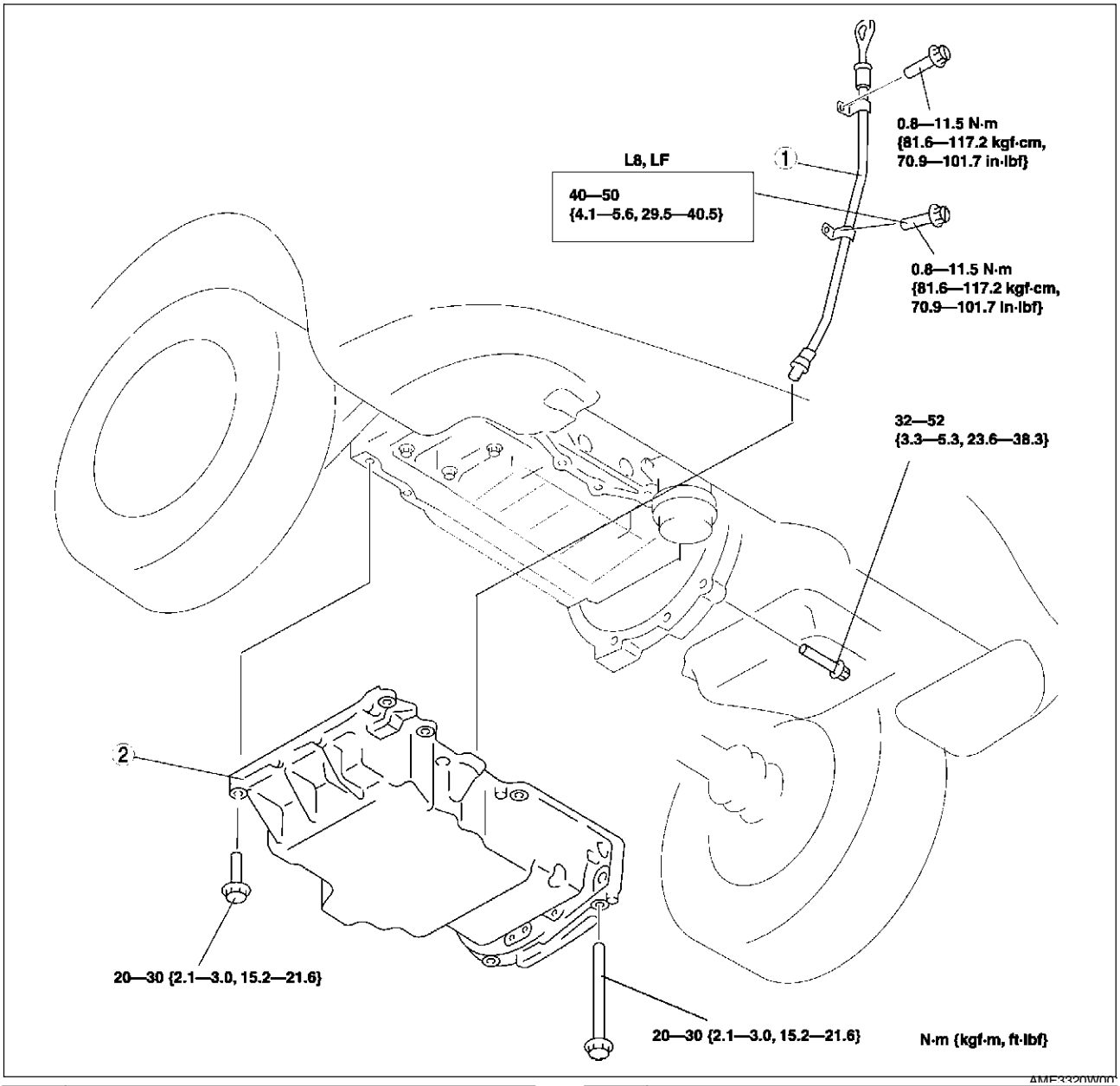

1	Oil level gauge pipe	2	Oil pan (See D–9 Oil Pan Installation Note)

Oil Pan Installation Note

1. Use a square ruler to unite the oil pan and the cylinder block junction side on the engine front cover side.

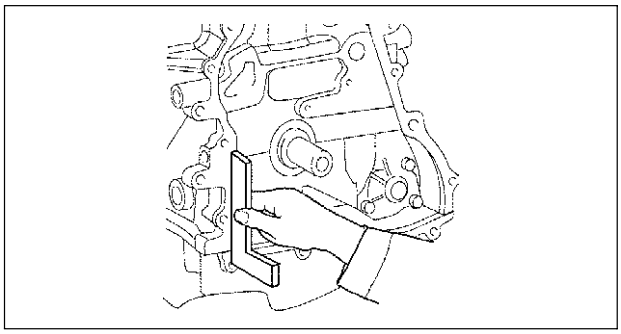

AME3320W002

2. Apply silicone sealant to the oil pressure switch threads as shown.

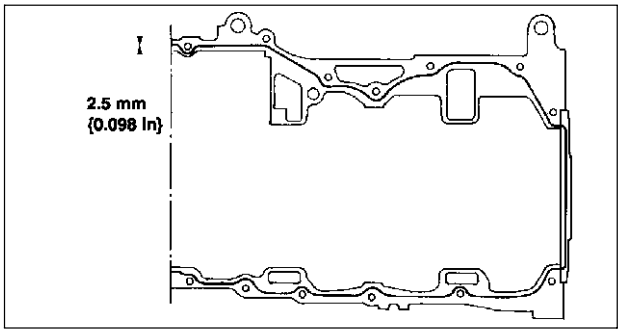

AME3320W003

3. Tighten the bolts in the order shown.

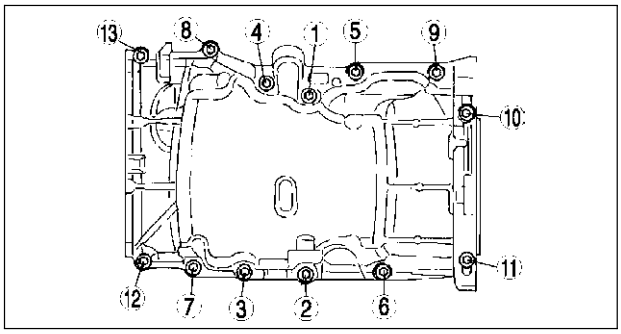

AME3320W004

OIL PUMP

OIL PUMP REMOVAL/INSTALLATION

A6E332214100W01

1. Disconnect the negative battery cable.
2. Drain the engine oil. (See D–4 ENGINE OIL REPLACEMENT.)
3. Remove the oil pan. (See D–8 OIL PAN REMOVAL/INSTALLATION.)
4. Remove in the order indicated in the table.
5. Install in the reverse order of removal.
6. Inspect the engine oil level. (See D–4 ENGINE OIL INSPECTION.)
7. Start the engine and inspect for oil leakage.
   - If the oil leaks, specify the faulty part and repair or replace it.
8. Inspect the oil pressure. (See D–3 OIL PRESSURE INSPECTION.)

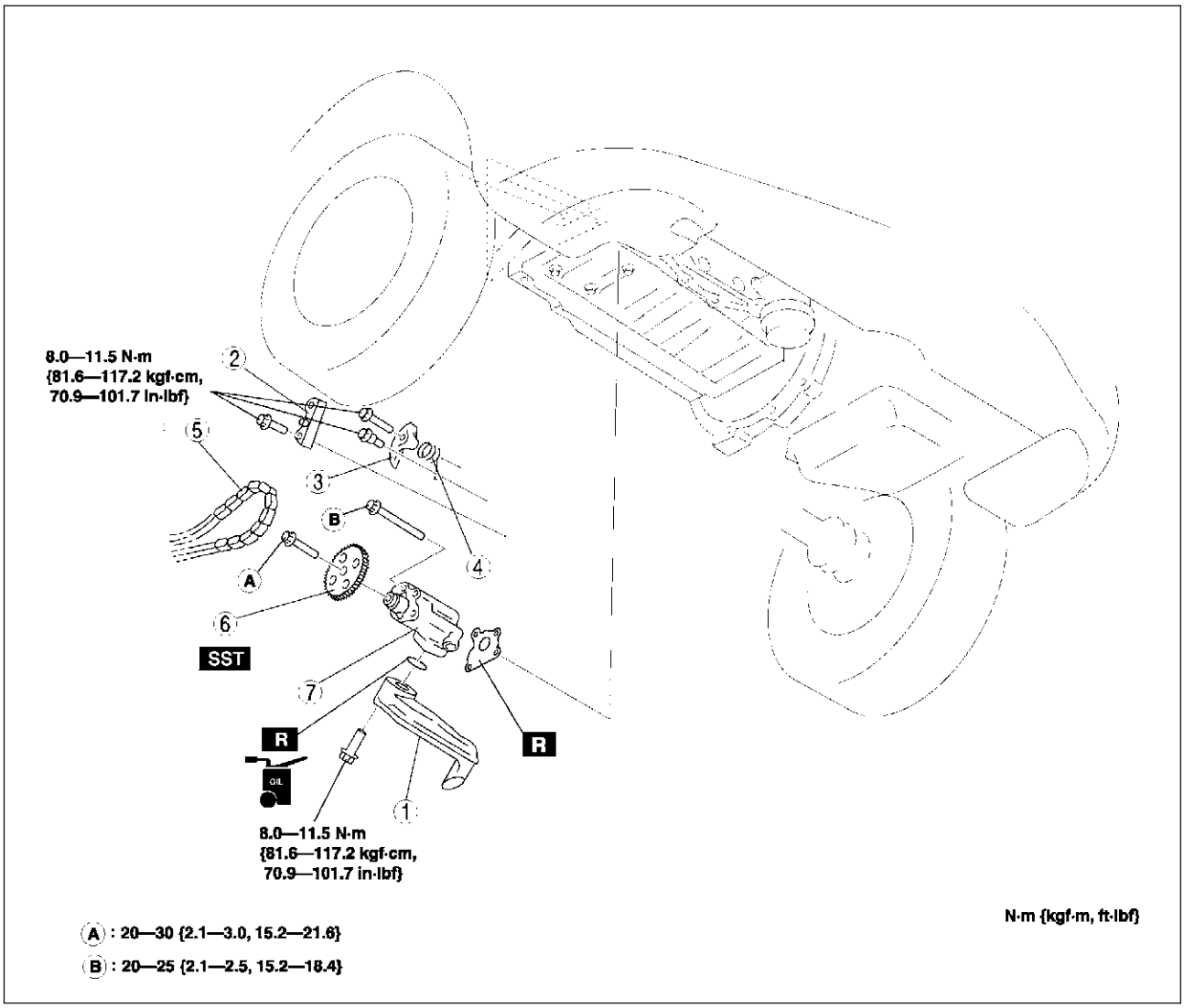

AME3322W001

1	Oil strainer
2	Oil pump chain guide
3	Oil pump chain tensioner
4	Oil pump chain tensioner spring

5	Oil pump chain
6	Oil pump sprocket (See D–11 Oil Pump Sprocket Removal / Installation Note)
7	Oil pump

Oil Pump Sprocket Removal / Installation Note

1. Install the **SST** to the oil pump sprocket to stop the oil pump from turn in.

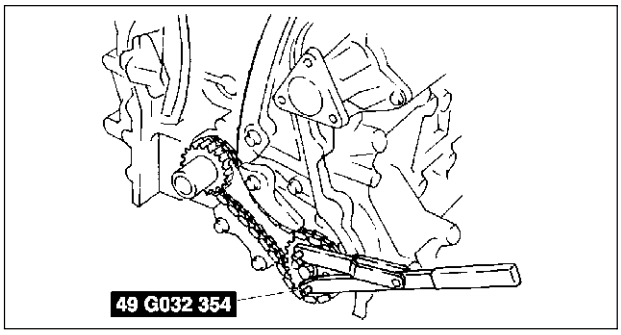

AME3322W002

COOLING SYSTEM

LOCATION INDEX E-2
LOCATION INDEX E-2
COOLING SYSTEM SERVICE WARNINGS E-3
COOLING SYSTEM SERVICE WARNINGS E-3
ENGINE COOLANT E-3
ENGINE COOLANT LEVEL INSPECTION E-3
ENGINE COOLANT REPLACEMENT E-3
ENGINE COOLANT LEAKAGE INSPECTION E-4
RADIATOR CAP E-5
RADIATOR CAP INSPECTION E-5
RADIATOR E-6
RADIATOR REMOVAL/INSTALLATION E-6
THERMOSTAT E-7
THERMOSTAT REMOVAL/INSTALLATION E-7
THERMOSTAT INSPECTION E-8
WATER PUMP E-8
WATER PUMP REMOVAL/INSTALLATION E-8
FAN MOTOR E-9
COOLING FAN REMOVAL/INSTALLATION E-9
COOLING FAN MOTOR REMOVAL/ INSTALLATION E-10
COOLING FAN MOTOR INSPECTION E-11

LOCATION INDEX

LOCATION INDEX

A6E360001002W01

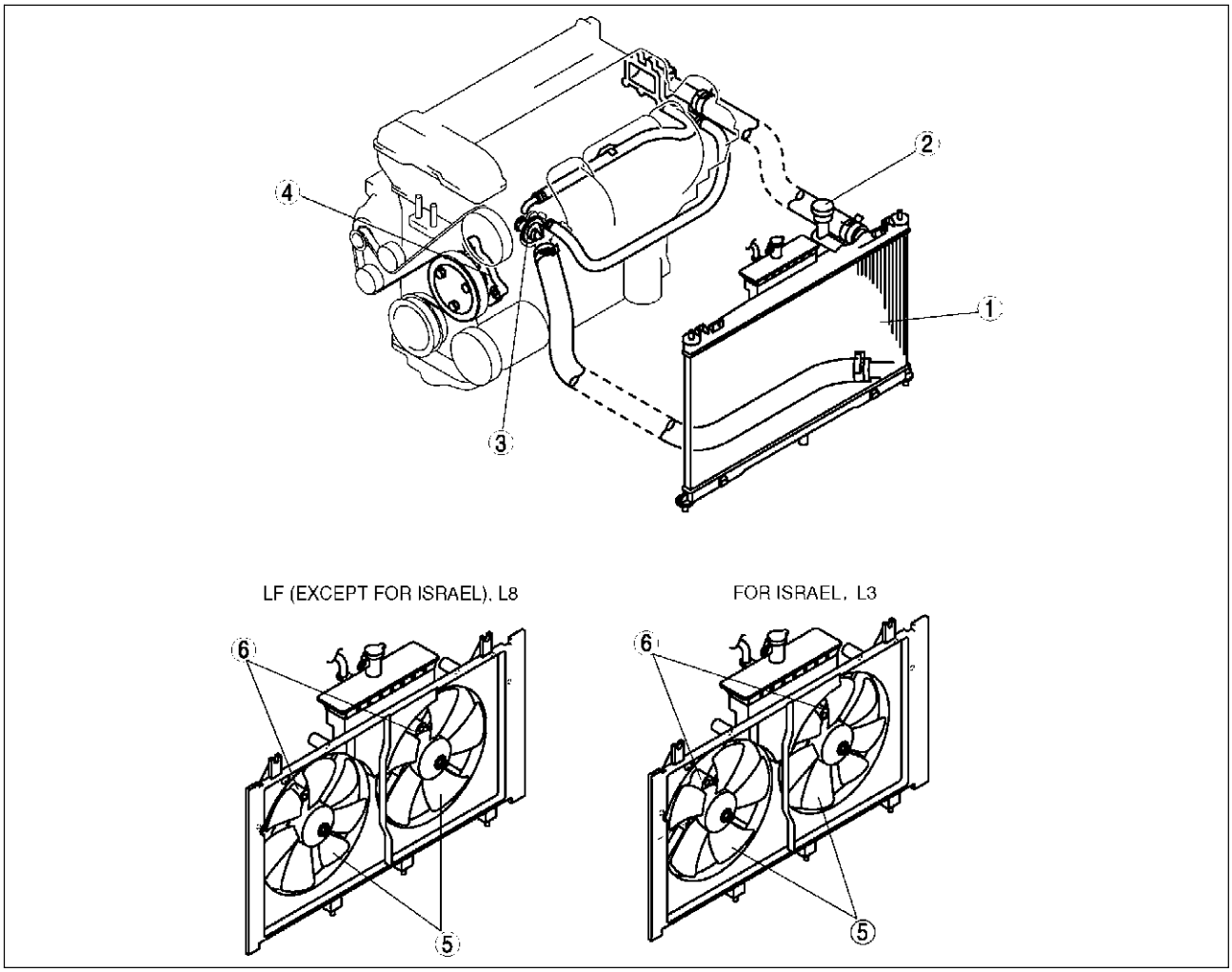

AME3602N001

1	Radiator (See E–6 RADIATOR REMOVAL/INSTALLATION)
2	Radiator cap (See E–5 RADIATOR CAP INSPECTION)
3	Thermostat (See E–7 THERMOSTAT REMOVAL/INSTALLATION) (See E–8 THERMOSTAT INSPECTION)

4	Water pump (See E–8 WATER PUMP REMOVAL/INSTALLATION)
5	Cooling fan (See E–9 COOLING FAN REMOVAL/INSTALLATION)
6	Cooling fan motor (See E–10 COOLING FAN MOTOR REMOVAL/INSTALLATION) (See E–11 COOLING FAN MOTOR INSPECTION)

COOLING SYSTEM SERVICE WARNINGS

COOLING SYSTEM SERVICE WARNINGS

A6E361001004W01

Warning

- **Never remove the radiator cap or loosen the radiator drain plug while the engine is running, or when the engine and radiator are hot. Scalding coolant and steam may shoot out and cause serious injury. It may also damage the engine and cooling system.**
- **Turn off the engine and wait until it is cool. Even then, be very careful when removing the cap. Wrap a thick cloth around it and slowly turn it counterclockwise to the first stop. Step back while the pressure escapes.**
- **When you are sure all the pressure is gone, press down on the cap using the cloth, turn it, and remove it.**

ENGINE COOLANT

ENGINE COOLANT LEVEL INSPECTION

A6E361215001W01

1. Verify that the coolant level in the coolant reservoir is between the F and L marks.
   - If the engine coolant level is below L, remove the radiator cap and add coolant. (See E–3 COOLING SYSTEM SERVICE WARNINGS.)

ENGINE COOLANT REPLACEMENT

A6E361215001W03

Warning

- **Drain the engine coolant while the engine is cold, otherwise it may burn you and cause serious injury.**

1. Remove the radiator cap.

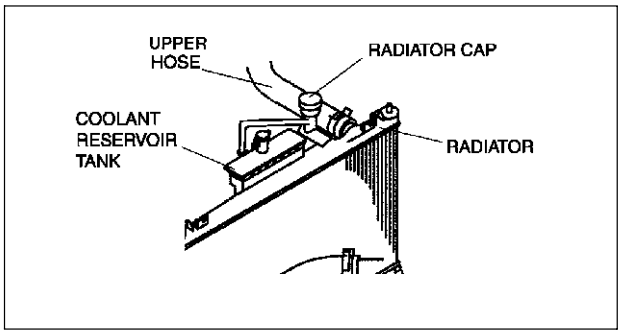

AME3612W001

2. Remove the radiator drain plug.
3. Drain the coolant into a container.
4. Flush the cooling system with water until all traces of color are gone.
5. Let the system drain completely.
6. Tighten the radiator drain plug.
7. Fill the coolant into the reservoir up to the FULL mark on the coolant reservoir.
8. Fully install the radiator cap.

Caution

- **If the coolant temperature becomes too high, stop the engine to prevent it from overheating.**

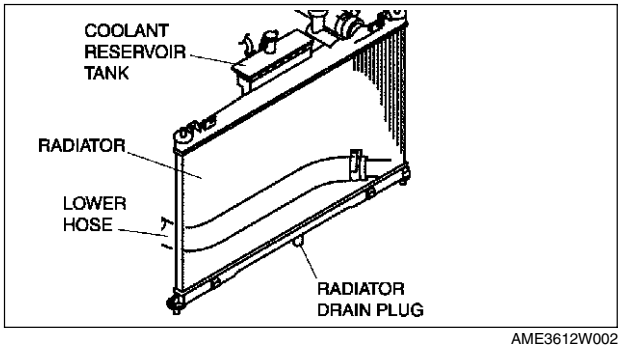

AME3612W002

9. Start the engine and let it idle until the cooling fan operates.
10. After engine warms up, perform the following steps.
    (1) Run the engine at **2,500 rpm** for **5 min**.
    (2) Run the engine at **3,000 rpm** for **5 s**, then return to idling.
    (3) Repeat Step (2) several times.
    (4) Run the engine at idle for **1 min**.
11. Stop the engine and wait until it is cool.
12. Remove the radiator cap.
13. Check the coolant level.
    - If It is low, repeat Steps 6—9.
14. Install the radiator cap.
15. Inspect for coolant leakage.
    - If not as specified, repair or replace the radiator cap.

ENGINE COOLANT LEAKAGE INSPECTION

A6E361215001W04

Warning
- **Never remove the radiator cap while the engine is running, or when the engine and radiator are hot. Scalding coolant and steam may shoot out and cause serious injury. It may also damage the engine and cooling system.**
- **Turn off the engine and wait until it is cool. Even then, be very careful when removing the cap. Wrap a thick cloth around it and slowly turn it counterclockwise to the first stop. Step back while the pressure escapes.**
- **When you are sure all the pressure is gone, press down on the cap using the cloth, turn it, and remove it.**

1. Inspect the coolant level.
2. Remove the radiator cap.
3. Clean the mounting surface of the rediator cap and the upper radiator hose.
4. Connect a radiator cap tester and the **radiator cap tester** to the reservoir filler port.
5. Apply specified pressure to the radiator.

Pressure
127 kPa { 1.3 kgf/cm^2, 18 psi}

6. Verify that the pressure is held.
    - If not, inspect the system for coolant leakage.
        — If the coolant leaks from the upper hose attachment part, replace the upper hose and the clamp.
        — If the coolant leaks from the main body of the radiator (caulking part), replace the radiator.

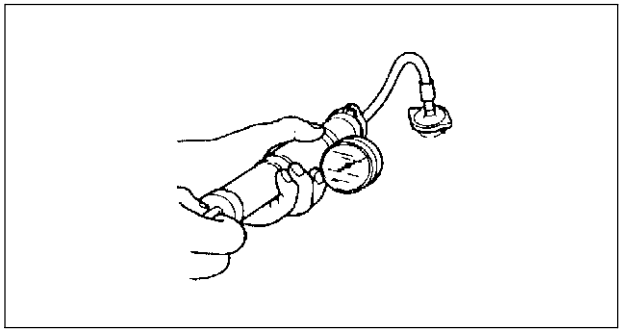

AME3612W003

RADIATOR CAP

RADIATOR CAP INSPECTION

A6E361415201W01

Warning

- **Never remove the radiator cap while the engine is running, or when the engine and radiator are hot. Scalding coolant and steam may shoot out and cause serious injury. It may also damage the engine and cooling system.**
- **Turn off the engine and wait until it is cool. Even then, be very careful when removing the cap. Wrap a thick cloth around it and slowly turn it counterclockwise to the first stop. Step back while the pressure escapes.**
- **When you are sure all the pressure is gone, press down on the cap using the cloth, turn it, and remove it.**

1. Clean the radiator cap negative pressure valve and tha sealed part.
2. Inspect the crack or turn over on sealed of the radiator cap.
   - If not as specified, repace the radiator cap.
3. Fill the radiator cap test adopter with the water or the engine coolant to the full level and attach the radiator cap to the adapter.
4. Hold the radiator cap downward and apply pressure gradually. Verify that the pressure become held for **10 s** within the specification.
   - If the pressure will not stable within the specification, replace the radiator cap.

Pressure

113—142 kPa

{ 1.1—1.4 kgf/cm^2, 15—20 psi}

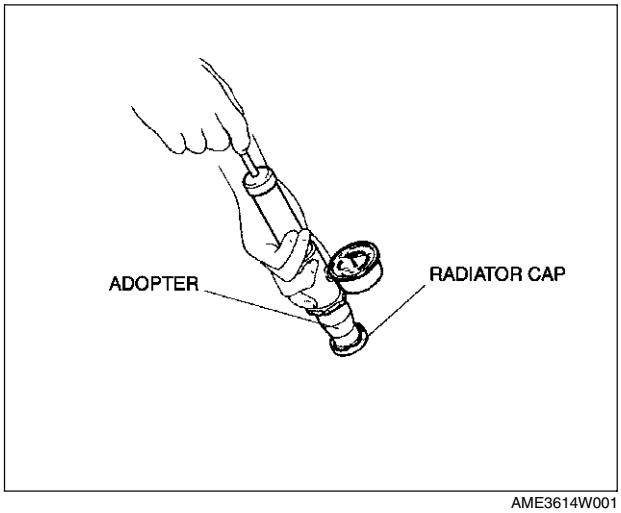

AME3614W001

RADIATOR

RADIATOR REMOVAL/INSTALLATION

A6E361615200W01

1. Disconnect the negative battery cable.
2. Drain the engine coolant. (See E–3 ENGINE COOLANT REPLACEMENT.)
3. Remove the cooling fan. (See E–9 COOLING FAN REMOVAL/INSTALLATION.)
4. Remove the oil hose. (ATX)
5. Remove in the order indicated in the table.
6. Install in the reverse order of removal.
7. Refill the engine coolant. (See E–3 ENGINE COOLANT REPLACEMENT.)
8. Inspect the engine coolant leakage. (See E–4 ENGINE COOLANT LEAKAGE INSPECTION.)

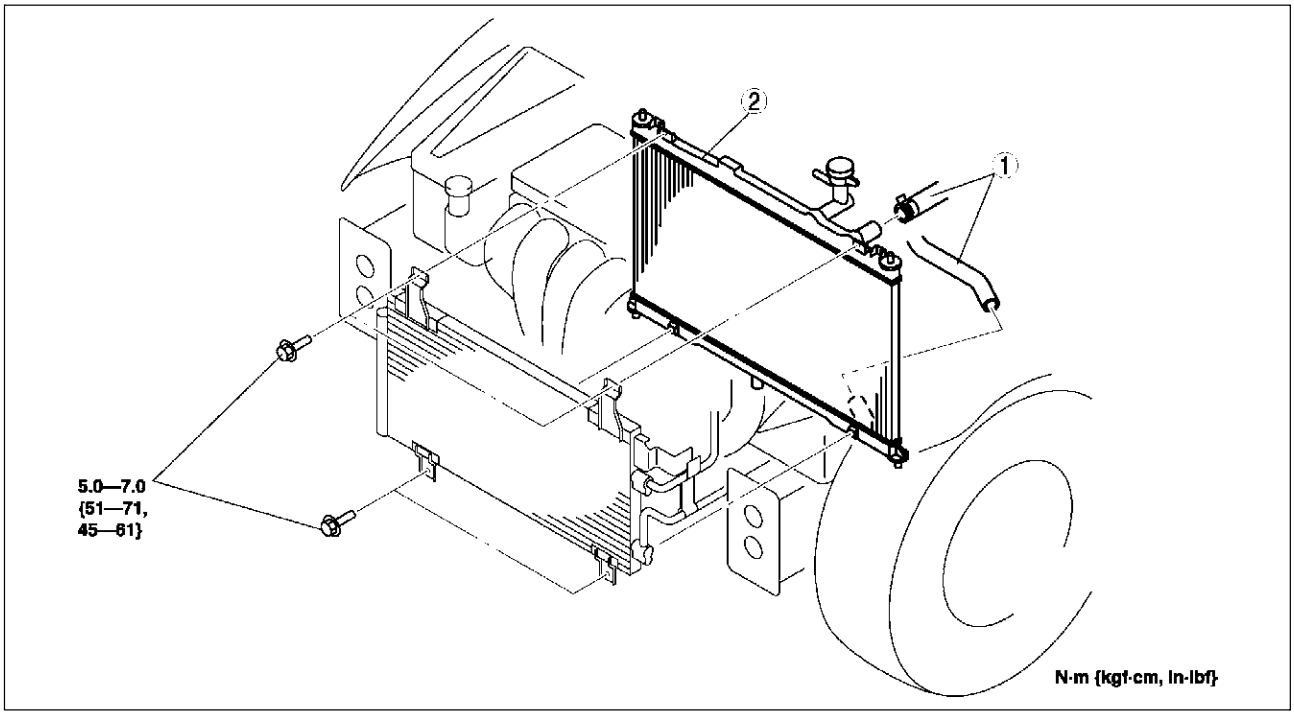

AME3616W001

1	Water hose	2	Radiator

THERMOSTAT

THERMOSTAT REMOVAL/INSTALLATION

A6E361815171W01

1. Remove the plug hole plate.
2. Disconnect the negative battery cable.
3. Drain the engine coolant. (See E–3 COOLING SYSTEM SERVICE WARNINGS.)
4. Remove the drive belt. (See B–3 DRIVE BELT REPLACEMENT.)
5. Remove the washer tank.
6. Remove the P/S oil pump.

Note
- Remove the P/S oil pump with hoses and pipe still connected.

7. Remove in the order indicated in the table.
8. Install in the reverse order of removal.
9. Refill the engine coolant. (See E–3 ENGINE COOLANT REPLACEMENT.)
10. Inspect the engine coolant leakage. (See E–4 ENGINE COOLANT LEAKAGE INSPECTION.)

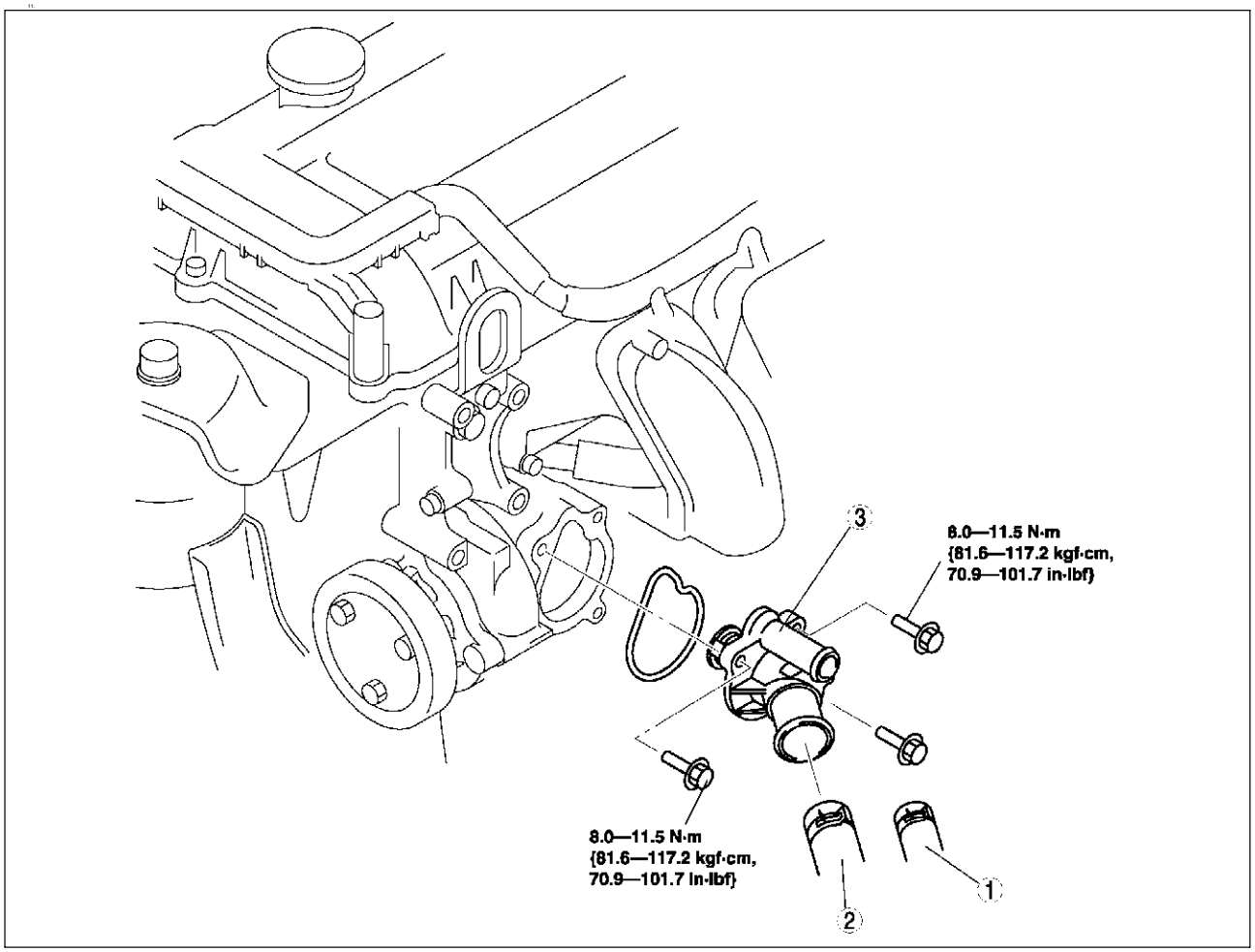

AME3618W001

1	Bypass hose
2	Lower hose
3	Thermostat assembly

THERMOSTAT INSPECTION

A6E361815171W02

1. Inspect the thermostat for the following.
   - Closed valve in room temperature
   - Opening temperature and lift of the valve
     — If not as specified, replace the thermostat.

Initial-opening temperature (°C {°F})	80.0—84.0 {176—183.2}
Full-open temperature (°C {°F})	97 {206.6}
Full-open lift (mm {in})	More than 8.0 {0.31}

WATER PUMP

WATER PUMP REMOVAL/INSTALLATION

A6E362015010W01

1. Disconnect the negative battery cable.
2. Drain the engine coolant. (See E–3 COOLING SYSTEM SERVICE WARNINGS.) (See E–3 ENGINE COOLANT REPLACEMENT.)
3. Loosen the water pump pulley bolt to remove the drive belt. (See B–3 DRIVE BELT REPLACEMENT.)
4. Remove in the order indicated in the table.
5. Install in the reverse order of removal.
6. Refill the engine coolant. (See E–3 ENGINE COOLANT REPLACEMENT.)
7. Inspect the engine coolant leakage. (See E–4 ENGINE COOLANT LEAKAGE INSPECTION.)

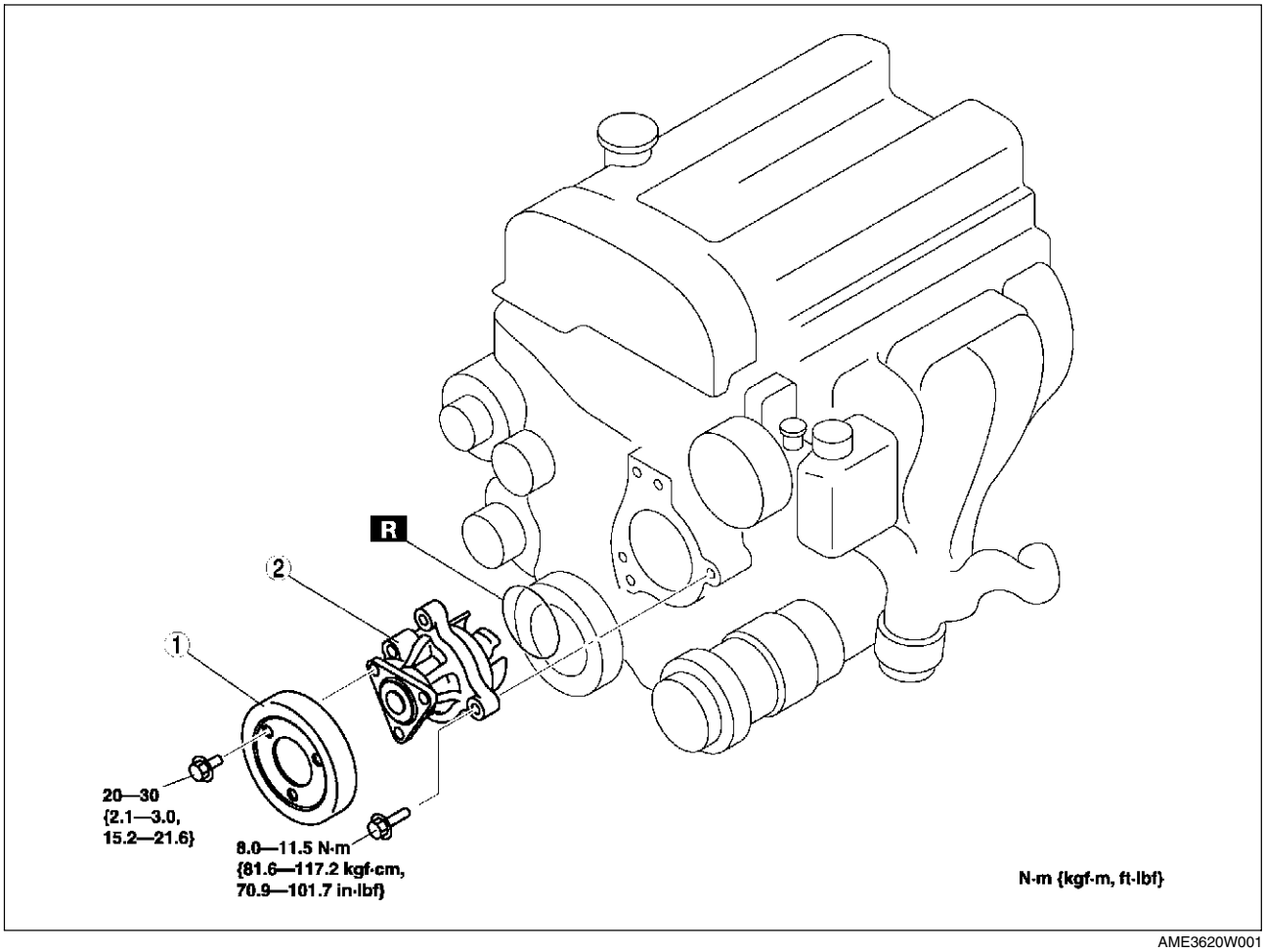

AME3620W001

1	Water pump pulley
2	Water pump

FAN MOTOR

COOLING FAN REMOVAL/INSTALLATION

A6E362215025W01

1. Disconnect the negative battery cable.
2. Remove the shroud panel. (See S–119 SHROUD PANEL REMOVAL/INSTALLATION.)
3. Remove the A/C pipe stay.
4. Remove the ATX pipe stay (ATX).
5. Remove in the order indicated in the table.
6. Install in the reverse order of removal.

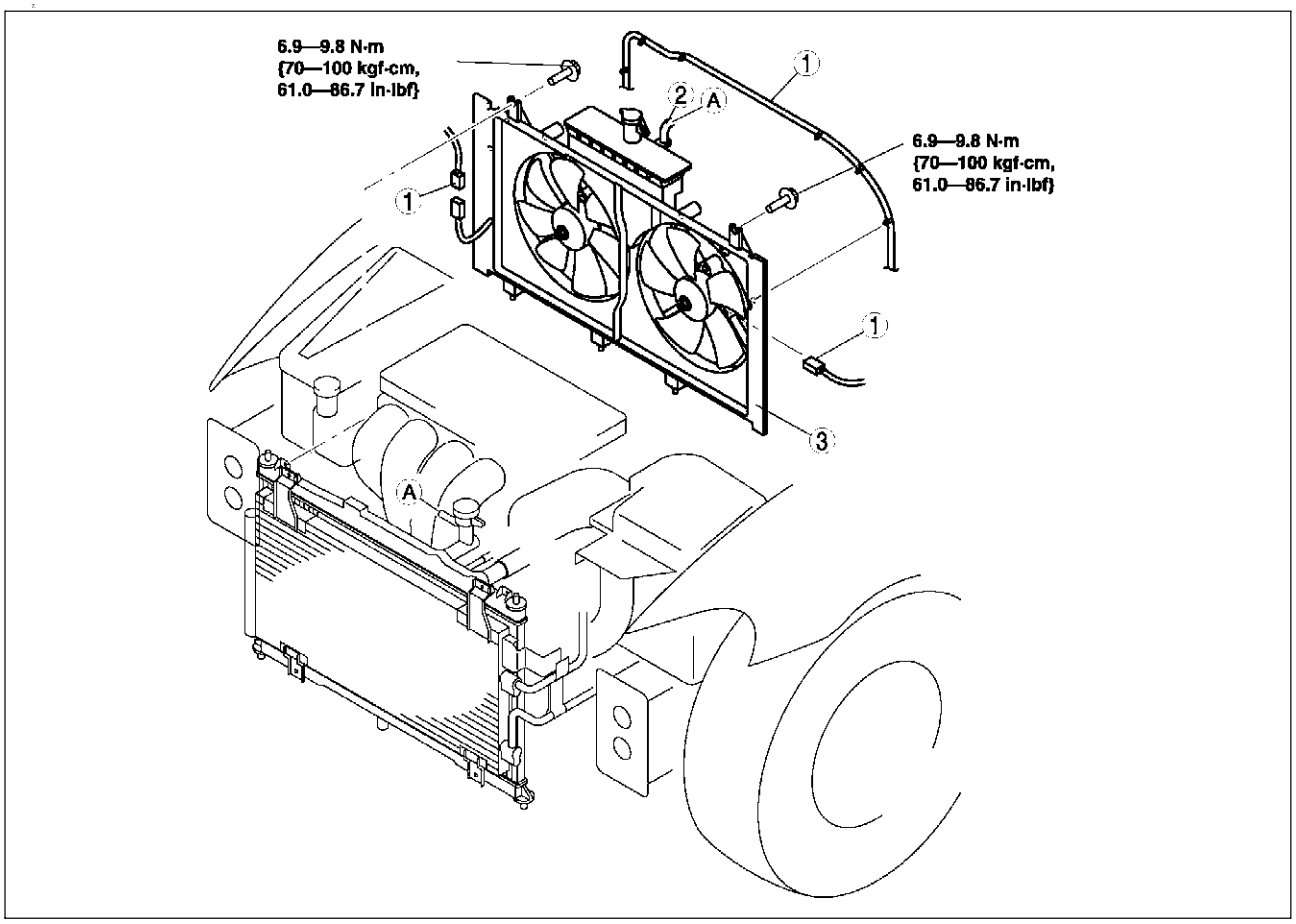

AME3621W001

1	Cooling fan harness, connector
2	Coolant reservoir hose
3	Cooling fan assembly

COOLING FAN MOTOR REMOVAL/INSTALLATION

A6E362215025W02

1. Remove the cooling fan. (See E–9 COOLING FAN REMOVAL/INSTALLATION.)
2. Remove in the order indicated in the table.
3. Install in the reverse order of removal.

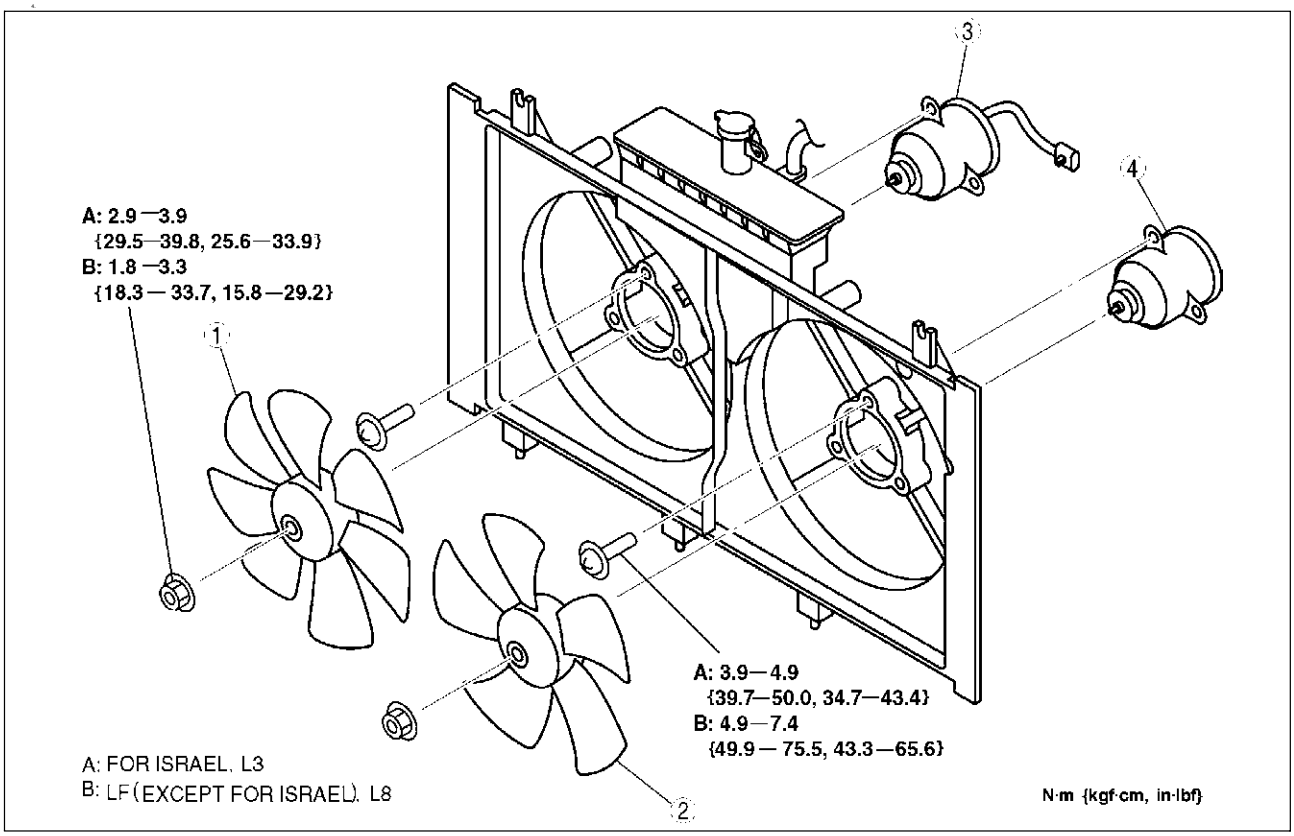

AME3621W002

1	Cooling fan No.2
2	Cooling fan No.1

3	Cooling fan motor No.2
4	Cooling fan motor No.1

COOLING FAN MOTOR INSPECTION

A6E362215025W03

1. Verify that the battery is fully charged.
2. Connect battery positive voltage and an ammeter to the fan motor connector.
3. Verify that the fan motor operates smoothly at the standard current draw.
   - If not as spcifid, replace the fan motor.

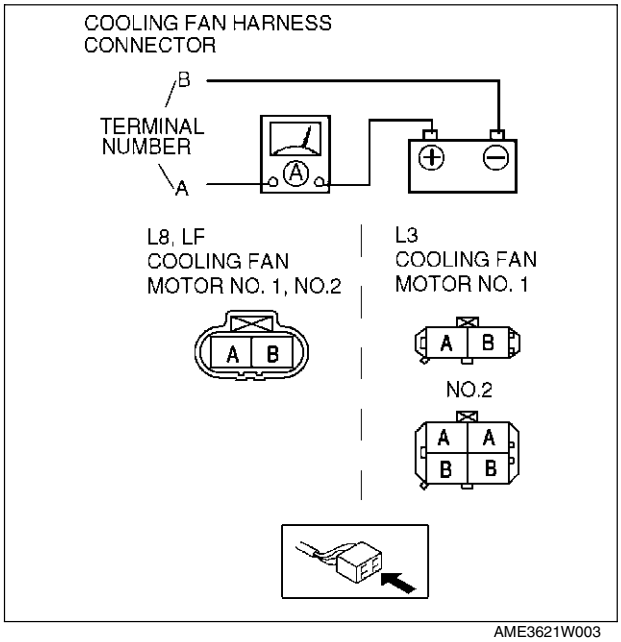

AME3621W003

Part name	Current (A)		
	L8	LF	L3
Cooling fan motor No.1	6.6	6.6 (Except Israel) 10 (For Israel)	5.9 (Except Israel) 10 (For Israel)
Cooling fan motor No.2	6.6	6.6(Except Israel) 10 (For Israel)	10

FUEL AND EMISSION CONTROL SYSTEMS

LOCATION INDEX F-3
INTAKE-AIR SYSTEM F-3
FUEL SYSTEM F-4
EMISSION SYSTEM F-6
CONTROL SYSTEM F-7
ENGINE TUNE-UP F-8
IGNITION TIMING INSPECTION F-8
IDLE SPEED INSPECTION F-8
IDLE MIXTURE INSPECTION F-9
INTAKE-AIR SYSTEM F-10
VACUUM HOSE ROUTING DIAGRAM F-10
INTAKE-AIR SYSTEM REMOVAL/INSTALLATION F-10
VARIABLE AIR DUCT (VAD) SHUTTER VALVE INSPECTION (L3) F-12
VARIABLE AIR DUCT (VAD) CONTROL SOLENOID VALVE INSPECTION (L3) F-13
VARIABLE AIR DUCT (VAD) CHECK VALVE (ONE-WAY) INSPECTION (L3) F-13
IDLE AIR CONTROL (IAC) VALVE INSPECTION F-13
VARIABLE INTAKE-AIR SYSTEM (VIS) SHUTTER VALVE ACTUATOR INSPECTION (L3) F-14
VARIABLE INTAKE-AIR SYSTEM (VIS) CONTROL SOLENOID VALVE INSPECTION (L3) F-14
VARIABLE TUMBLE CONTROL SYSTEM (VTCS) SHUTTER VALVE ACTUATOR INSPECTION F-15
VARIABLE TUMBLE CONTROL SOLENOID VALVE INSPECTION F-15
ACCELERATOR PEDAL REMOVAL/INSTALLATION F-16
ACCELERATOR CABLE INSPECTION/ADJUSTMENT F-16
FUEL SYSTEM F-17
BEFORE REPAIR PROCEDURE F-17
AFTER REPAIR PROCEDURE F-17
FUEL TANK REMOVAL/INSTALLATION F-18
FUEL TANK INSPECTION F-19
NONRETURN VALVE INSPECTION F-20
FUEL LINE PRESSURE INSPECTION F-20
FUEL PUMP UNIT REMOVAL/INSTALLATION F-22
FUEL PUMP UNIT DISASSEMBLY/ASSEMBLY F-24
FUEL PUMP UNIT INSPECTION F-25
FUEL INJECTOR REMOVAL/INSTALLATION F-28
FUEL INJECTOR INSPECTION F-31
PRESSURE REGULATOR INSPECTION F-34
PULSATION DAMPER REMOVAL/INSTALLATION F-34
PULSATION DAMPER INSPECTION F-34
EXHAUST SYSTEM F-35
EXHAUST SYSTEM INSPECTION F-35
EXHAUST SYSTEM REMOVAL/INSTALLATION F-35
EMISSION SYSTEM F-38
CHARCOAL CANISTER INSPECTION F-38
EVAPORATIVE GAS CHECK VALVE (ONE-WAY) INSPECTION (L.H.D.) F-38
PURGE SOLENOID VALVE REMOVAL/INSTALLATION F-38
PURGE SOLENOID VALVE INSPECTION F-39
EGR VALVE REMOVAL/INSTALLATION F-39
EGR VALVE INSPECTION F-40
PCV VALVE INSPECTION F-41
THREE-WAY CATALYTIC CONVERTER (TWC) INSPECTION F-41
CONTROL SYSTEM F-43
PCM REMOVAL/INSTALLATION F-43
PCM INSPECTION F-45
PCM CONFIGURATION F-50
INTAKE AIR TEMPERATURE (IAT) SENSOR INSPECTION F-50
MASS AIR FLOW (MAF) SENSOR INSPECTION F-51
THROTTLE POSITION (TP) SENSOR INSPECTION F-51
MANIFOLD ABSOLUTE PRESSURE (MAP) SENSOR INSPECTION F-52
ENGINE COOLANT TEMPERATURE (ECT) SENSOR REMOVAL/INSTALLATION F-53
ENGINE COOLANT TEMPERATURE (ECT) SENSOR INSPECTION F-53
CRANKSHAFT POSITION (CKP) SENSOR INSPECTION F-54
CRANKSHAFT POSITION (CKP) SENSOR REMOVAL/INSTALLATION F-54
CAMSHAFT POSITION (CMP) SENSOR INSPECTION F-55
KNOCK SENSOR INSPECTION F-56
KNOCK SENSOR REMOVAL/INSTALLATION F-56
HEATED OXYGEN SENSOR (HO2S) INSPECTION F-56
POWER STEERING PRESSURE (PSP) SWITCHINSPECTION F-58
CLUTCH SWITCH INSPECTION F-59
NEUTRAL SWITCH INSPECTION F-59
BAROMETRIC PRESSURE (BARO) SENSOR INSPECTION F-60
ON-BOARD DIAGNOSTIC F-61
FOREWORD F-61
OBD PENDING TROUBLE CODES F-62
OBD FREEZE FRAME DATA F-62
OBD ON-BOARD SYSTEM READINESS TEST F-62
OBD DIAGNOSTIC MONITORING TEST RESULTS F-62
OBD READ/CLEAR DIAGNOSTIC TEST RESULTS F-62
OBD PARAMETER IDENTIFICATION (PID) ACCESS F-62
ON-BOARD DIAGNOSTIC TEST F-62

OBD DRIVE MODE F-64
DIAGNOSTIC MONITORING TEST RESULTS. F-65
DTC CONFIRMATION PROCEDURE F-66
KOEO/KOER SELF-TEST F-66
AFTER REPAIR PROCEDURE F-66
DTC TABLE F-67
DTC P0010 ..... F-70
DTC P0011 ..... F-72
DTC P0012 ..... F-73
DTC P0031 ..... F-74
DTC P0032 ..... F-76
DTC P0037 ..... F-78
DTC P0038 ..... F-80
DTC P0101 ..... F-81
DTC P0102 ..... F-83
DTC P0103 ..... F-85
DTC P0107 ..... F-86
DTC P0108 ..... F-88
DTC P0111 ..... F-90
DTC P0112 ..... F-91
DTC P0113 ..... F-92
DTC P0117 ..... F-94
DTC P0118 ..... F-96
DTC P0121 ..... F-98
DTC P0122 ..... F-100
DTC P0123 ..... F-102
DTC P0125 ..... F-104
DTC P0131, P0132 ..... F-105
DTC P0133 ..... F-108
DTC P0134 ..... F-110
DTC P0138 ..... F-112
DTC P0140 ..... F-114
DTC P0171 ..... F-116
DTC P0172 ..... F-119
DTC P0300 ..... F-121
DTC P0301, P0302, P0303, P0304 ..... F-124
DTC P0327 ..... F-126
DTC P0328 ..... F-128
DTC P0335 ..... F-130
DTC P0340 ..... F-132
DTC P0403 ..... F-134
DTC P0420 ..... F-137
DTC P0443 ..... F-138
DTC P0480 ..... F-140
DTC P0500 ..... F-142
DTC P0505 ..... F-144
DTC P0506 ..... F-145
DTC P0507 ..... F-147
DTC P0511 ..... F-148
DTC P0550 ..... F-150
DTC P0602 ..... F-152
DTC P0610 ..... F-152
DTC P0661 ..... F-153
DTC P0662 ..... F-154
DTC P0703 ..... F-156
DTC P0704 ..... F-158
DTC P0850 ..... F-160
DTC P1410 ..... F-162
DTC P1562 ..... F-164
DTC P2006 ..... F-166
DTC P2009 ..... F-168
DTC P2010 ..... F-170
DTC P2228 ..... F-172
DTC P2229 ..... F-174
DTC P2502 ..... F-176
DTC P2503 ..... F-177
DTC P2504 ..... F-178
TROUBLESHOOTING F-181
ENGINE SYMPTOM TROUBLESHOOTING ... F-181
QUICK DIAGNOSTIC CHART F-182
NO.1 MELTING OF MAIN OR OTHER FUSES F-186
NO.2 MIL ILLUMINATES F-186
NO.3 WILL NOT CRANK F-187
NO.4 HARD TO START/LONG CRANK/ ERRATIC START/ERRATIC CRANK F-189
NO.5 ENGINE STALLS-AFTER START/AT IDLE F-191
NO.6 CRANKS NORMALLY BUT WILL NOT START F-195
NO.7 SLOW RETURN TO IDLE F-198
NO.8 ENGINE RUNS ROUGH/ROLLING IDLE F-199
NO.9 FAST IDLE/RUNS ON F-201
NO.10 LOW IDLE/STALLS DURING DECELERATION F-202
NO.11 ENGINE STALLS/QUITS, ENGINE RUNS ROUGH, MISSES, BUCK/JERK, HESITATION/STUMBLE, SURGES F-204
NO.12 LACK/LOSS OF POWER-ACCELERATION/CRUISE F-207
NO.13 KNOCKING/PINGING-ACCELERATION/CRUISE F-210
NO.14 POOR FUEL ECONOMY F-211
NO.15 EMISSION COMPLIANCE F-213
NO.16 HIGH OIL CONSUMPTION/ LEAKAGE F-214
NO.17 COOLING SYSTEM CONCERNS-OVERHEATING F-215
NO.18 COOLING SYSTEM CONCERNS-RUNS COLD F-216
NO.19 EXHAUST SMOKE F-217
NO.20 FUEL ODOR (IN ENGINE COMPARTMENT) F-218
NO.21 ENGINE NOISE F-219
NO.22 VIBRATION CONCERNS (ENGINE) F-220
NO.23 A/C DOES NOT WORK SUFFICIENTLY F-220
NO.24 A/C IS ALWAYS ON OR A/C COMPRESSOR RUNS CONTINUOUSLY ... F-221
NO.25 A/C IS NOT CUT OFF UNDER WIDE OPEN THROTTLE CONDITIONS F-221
NO.26 EXHAUST SULPHUR SMELL F-222
NO.27 CONSTANT VOLTAGE F-223
NO.28 SPARK PLUG CONDITION F-225
INTERMITTENT CONCERN TROUBLESHOOTING F-227
ENGINE CONTROL SYSTEM OPERATION INSPECTION F-229

LOCATION INDEX

INTAKE-AIR SYSTEM

A6E390013000W01

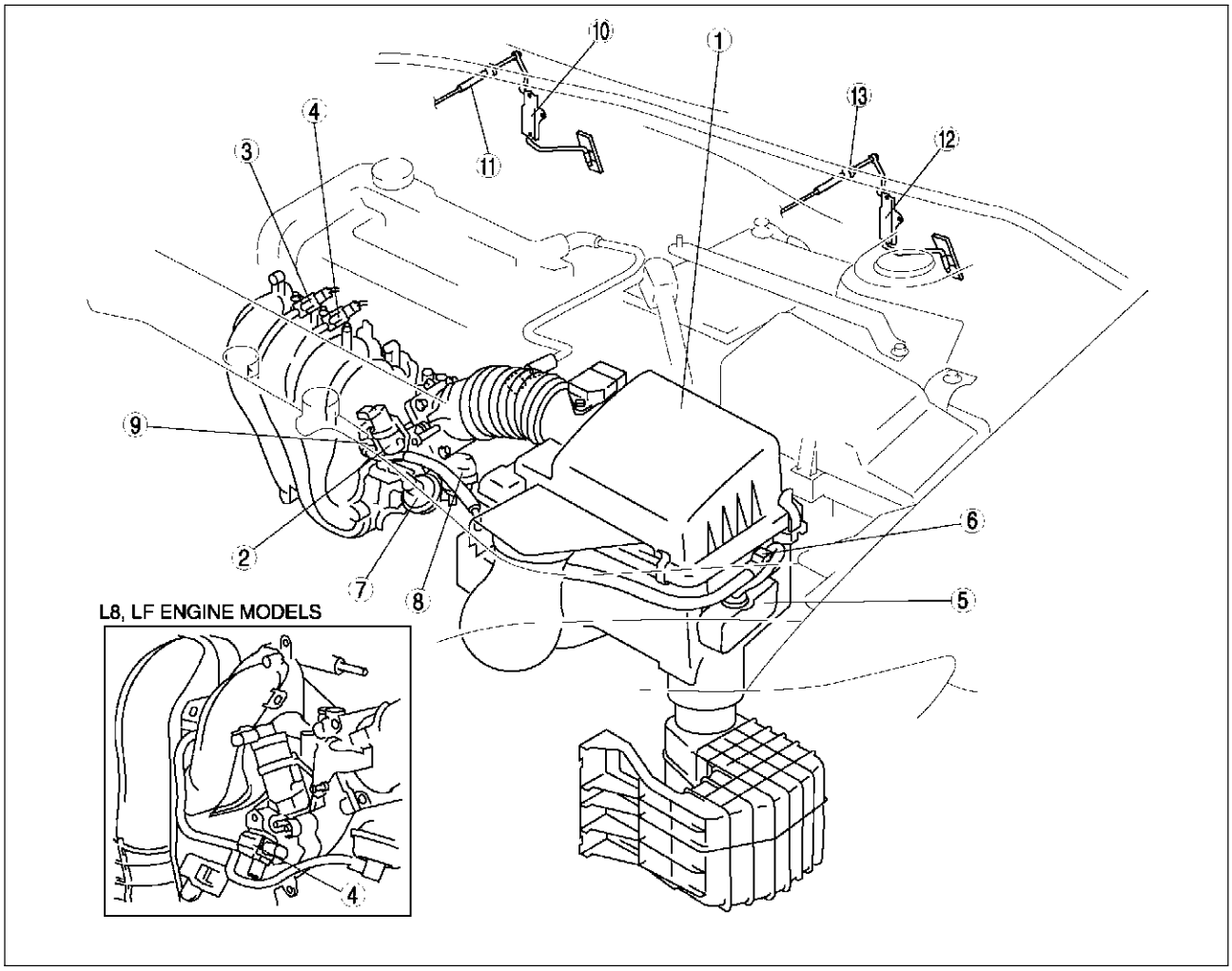

A6E3910W018

1	Air cleaner (See F–10 INTAKE-AIR SYSTEM REMOVAL/ INSTALLATION)
2	IAC valve (See F–13 IDLE AIR CONTROL (IAC) VALVE INSPECTION)
3	VIS control solenoid valve (L3) (See F–14 VARIABLE INTAKE-AIR SYSTEM (VIS) CONTROL SOLENOID VALVE INSPECTION (L3))
4	Variable tumble control solenoid valve (See F–15 VARIABLE TUMBLE CONTROL SOLENOID VALVE INSPECTION)
5	VAD shutter valve (L3) (See F–12 VARIABLE AIR DUCT (VAD) SHUTTER VALVE INSPECTION (L3))
6	VAD control solenoid valve (L3) (See F–13 VARIABLE AIR DUCT (VAD) CONTROL SOLENOID VALVE INSPECTION (L3))
7	VIS shutter valve actuator (L3) (See F–14 VARIABLE INTAKE-AIR SYSTEM (VIS) SHUTTER VALVE ACTUATOR INSPECTION (L3))
8	VTCS shutter valve actuator (See F–15 VARIABLE TUMBLE CONTROL SYSTEM (VTCS) SHUTTER VALVE ACTUATOR INSPECTION)
9	VAD Check valve (one-way) (L3) (See F–13 VARIABLE AIR DUCT (VAD) CHECK VALVE (ONE-WAY) INSPECTION (l3))
10	Accelerator pedal (R.H.D.) (See F–16 ACCELERATOR PEDAL REMOVAL/ INSTALLATION)
11	Accelerator cable (R.H.D.) (See F–16 ACCELERATOR PEDAL REMOVAL/ INSTALLATION)
12	Accelerator pedal (L.H.D.) (See F–16 ACCELERATOR PEDAL REMOVAL/ INSTALLATION)
13	Accelerator cable (L.H.D.) (See F–16 ACCELERATOR PEDAL REMOVAL/ INSTALLATION)

FUEL SYSTEM

A6E390001006W01

Engine Room Side

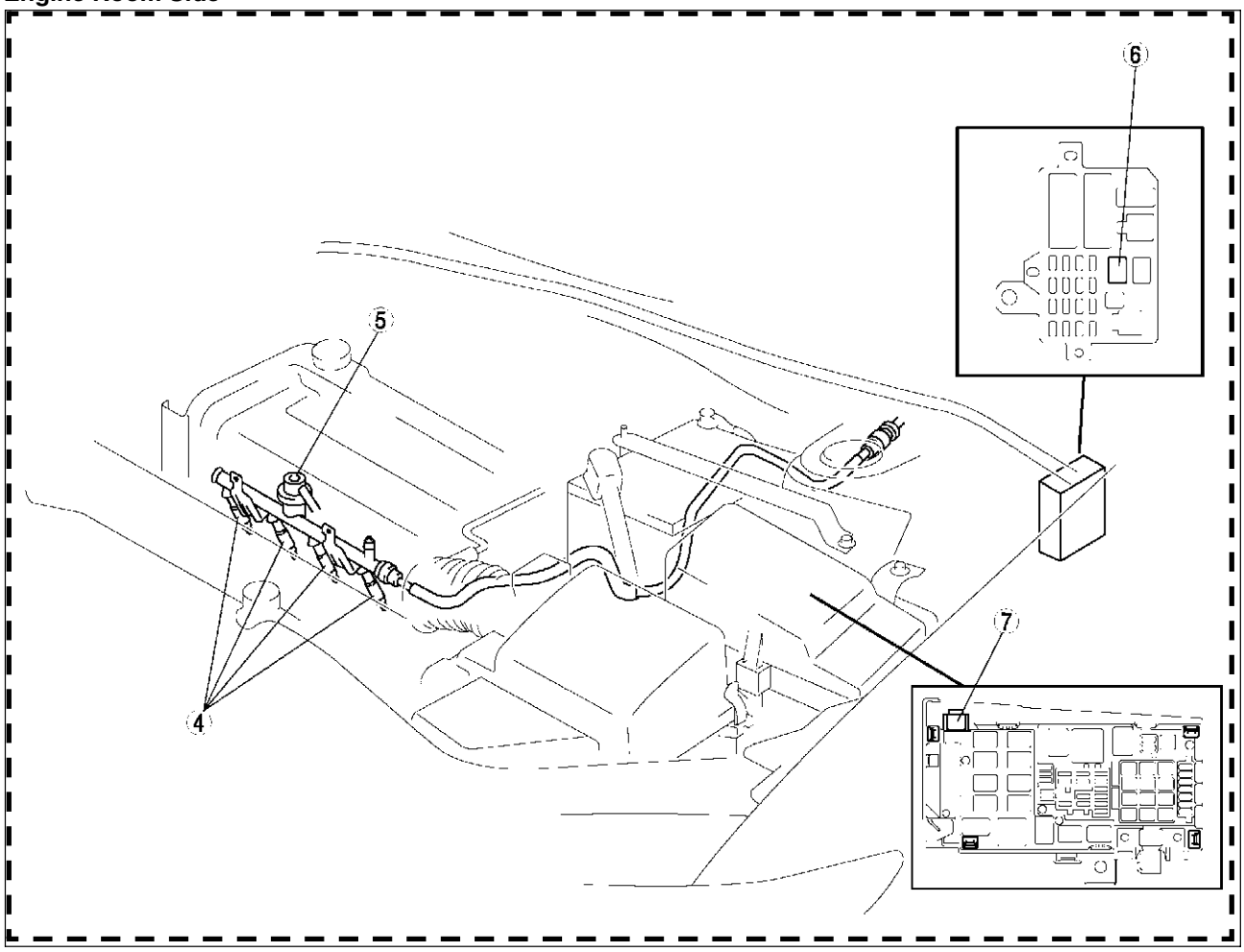

A6E3912W015

Fuel tank side

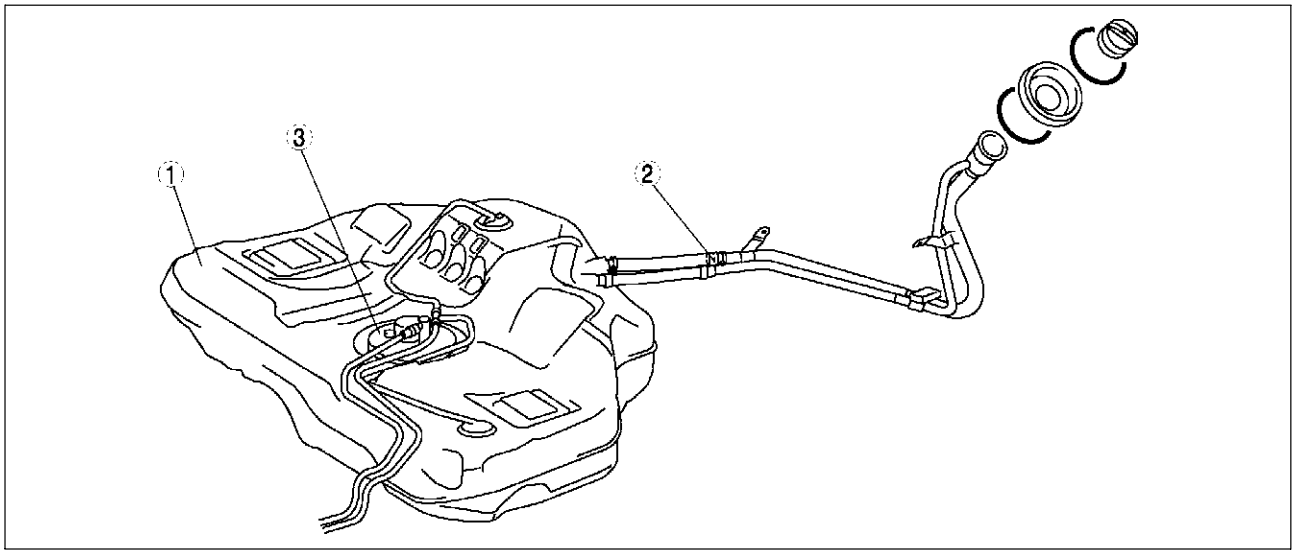

A6E3912W045

1	Fuel tank (See F–18 FUEL TANK REMOVAL/INSTALLATION) (See F–19 FUEL TANK INSPECTION)
2	Nonreturn valve (See F–20 NONRETURN VALVE INSPECTION)
3	Fuel pump unit (See F–22 FUEL PUMP UNIT REMOVAL/INSTALLATION) (See F–24 FUEL PUMP UNIT DISASSEMBLY/ASSEMBLY) (See F–25 FUEL PUMP UNIT INSPECTION)

4	Fuel injector (See F–28 FUEL INJECTOR REMOVAL/INSTALLATION) (See F–31 FUEL INJECTOR INSPECTION)
5	Pulsation damper (See F–34 PULSATION DAMPER REMOVAL/INSTALLATION) (See F–34 PULSATION DAMPER INSPECTION)
6	Fuel pump relay (See T–24 RELAY INSPECTION)
7	Check connector

EMISSION SYSTEM

A6E390001074W01

Engine room side

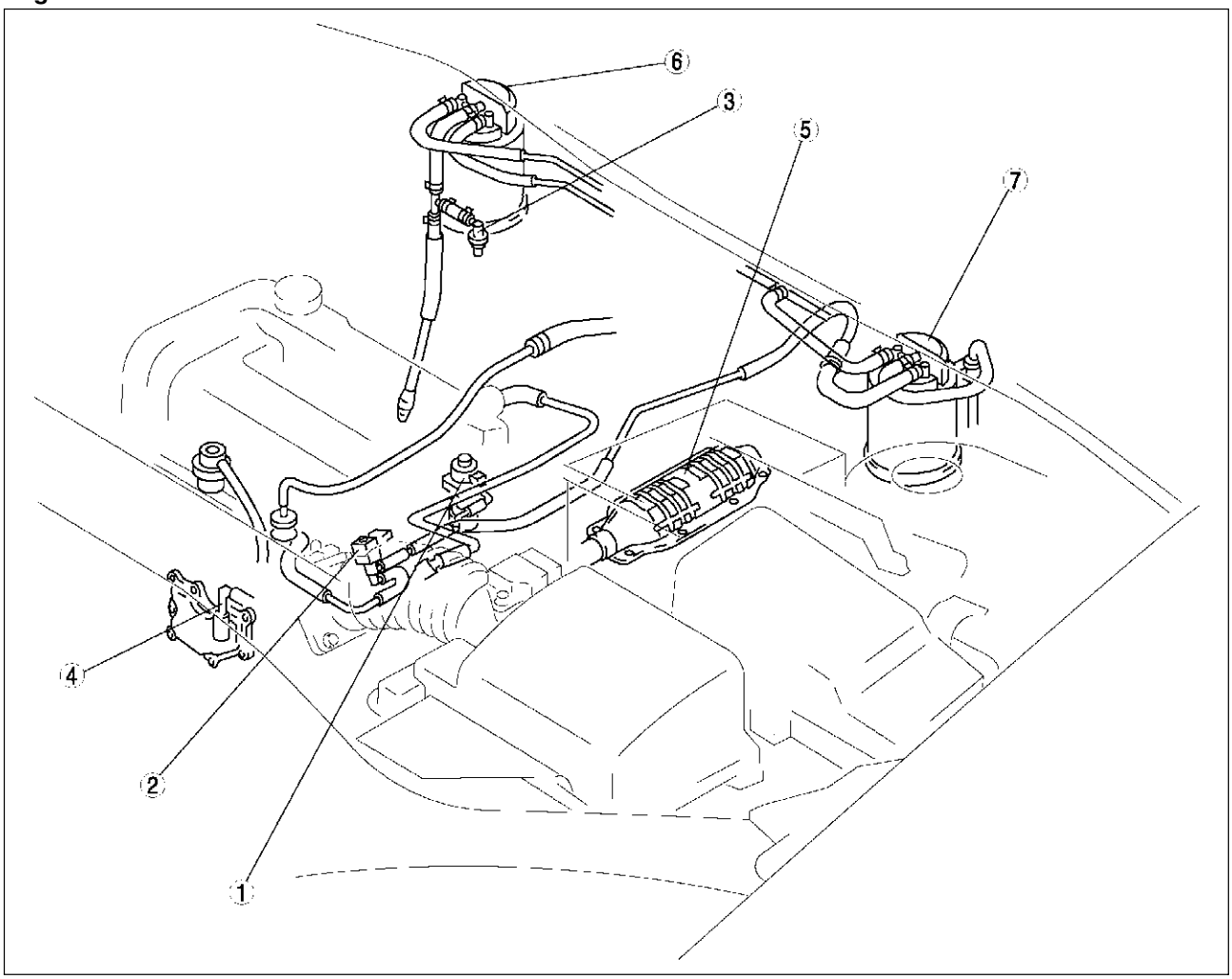

A6E3916W017

1	EGR valve (See F–39 EGR VALVE REMOVAL/ INSTALLATION) (See F–40 EGR VALVE INSPECTION)
2	Purge solenoid valve (See F–38 PURGE SOLENOID VALVE REMOVAL/ INSTALLATION) (See F–39 PURGE SOLENOID VALVE INSPECTION)
3	Evaporative gas check valve (one-way) (L.H.D.) (See F–38 EVAPORATIVE GAS CHECK VALVE (ONE-WAY) INSPECTION (L.H.D.))

4	PCV valve (See F–41 PCV VALVE INSPECTION)
5	TWC (See F–41 THREE-WAY CATALYTIC CONVERTER (TWC) INSPECTION)
6	Charcoal canister (L.H.D.) (See F–38 CHARCOAL CANISTER INSPECTION)
7	Charcoal canister (R.H.D.) (See F–38 CHARCOAL CANISTER INSPECTION)

CONTROL SYSTEM

A6E390001074W02

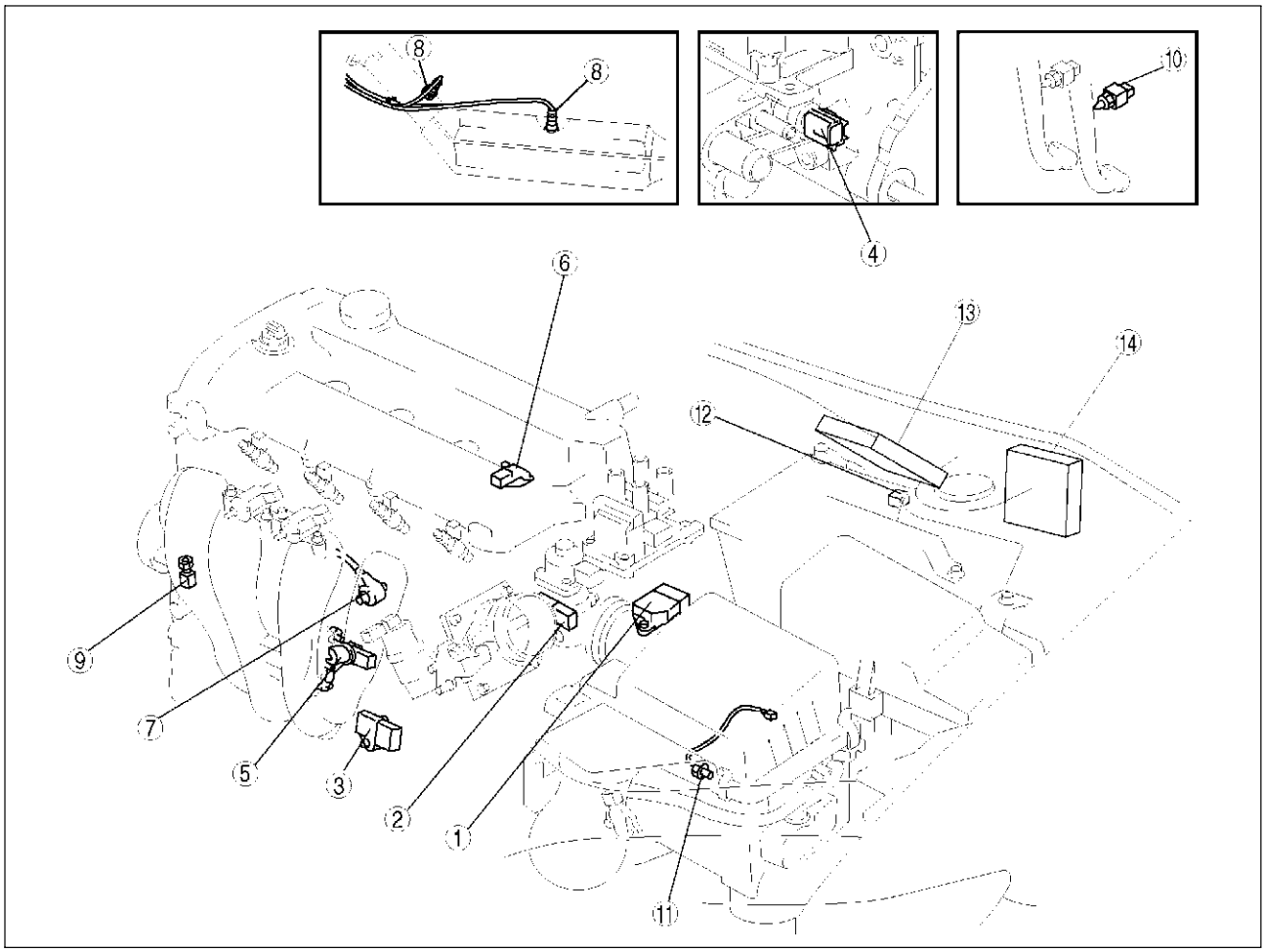

A6E3940W500

1	MAF/IAT sensor (See F–50 INTAKE AIR TEMPERATURE (IAT) SENSOR INSPECTION) (See F–51 MASS AIR FLOW (MAF) SENSOR INSPECTION)
2	TP sensor (See F–51 THROTTLE POSITION (TP) SENSOR INSPECTION)
3	MAP sensor (See F–52 MANIFOLD ABSOLUTE PRESSURE (MAP) SENSOR INSPECTION)
4	ECT sensor (See F–53 ENGINE COOLANT TEMPERATURE (ECT) SENSOR REMOVAL/INSTALLATION) (See F–53 ENGINE COOLANT TEMPERATURE (ECT) SENSOR INSPECTION
5	CKP sensor (See F–54 CRANKSHAFT POSITION (CKP) SENSOR INSPECTION) (See F–54 CRANKSHAFT POSITION (CKP) SENSOR REMOVAL/INSTALLATION)
6	CMP sensor (See F–55 CAMSHAFT POSITION (CMP) SENSOR INSPECTION)

7	Knock sensor (See F–56 KNOCK SENSOR INSPECTION) (See F–56 KNOCK SENSOR REMOVAL/INSTALLATION)
8	Heated oxygen sensor (See F–56 HEATED OXYGEN SENSOR (HO2S) INSPECTION)
9	PSP switch (See F–58 POWER STEERING PRESSURE (PSP) SWITCH INSPECTION)
10	Clutch switch (See F–59 CLUTCH SWITCH INSPECTION)
11	Neutral switch (See F–59 NEUTRAL SWITCH INSPECTION)
12	BARO sensor (See F–60 BAROMETRIC PRESSURE (BARO) SENSOR INSPECTION)
13	PCM (U.K. specs.) (See F–43 PCM REMOVAL/INSTALLATION) (See F–45 PCM INSPECTION) (See F–50 PCM CONFIGURATION)
14	PCM (L.H.D.) (See F–43 PCM REMOVAL/INSTALLATION) (See F–45 PCM INSPECTION) (See F–50 PCM CONFIGURATION)

ENGINE TUNE-UP

IGNITION TIMING INSPECTION

A6E390802000W01

Note
- Ignition timing is not adjustable.
- Ignition timing verification requires WDS or equivalent.

1. Turn off the electrical loads.
2. Warm up the engine as follows.
   (1) Start the engine.
   (2) Maintain the engine speed at **approx. 3,000 rpm** until the cooling fans start to operate.
   (3) Release the accelerator pedal.
   (4) Wait until the cooling fans stop.
3. Verify that the ignition timing (WDS: SPARKADV PID) is within the specification using WDS or equivalent.

Ignition timing
Approx. BTDC 10 degree

4. Verify that ingestion timing advances when the engine speed increases gradually.

IDLE SPEED INSPECTION

A6E390802000W02

Note
- Ignition timing is not adjustable.
- Ignition timing verification requires WDS or equivalent.

1. Turn off the electrical loads.
2. Warm up the engine as follows.
   (1) Start the engine.
   (2) Maintain the engine speed at **approx. 3,000 rpm** until the cooling fans start to operate.
   (3) Release the accelerator pedal.
   (4) Wait until the cooling fans stop.
3. Verify that the idle speed (WDS: RPM PID) is within the specification using WDS or equivalent.

Idle speed (L8 engine model)

Condition	Engine speed (rpm)*1
No load	650—750
Electrical loads*2 ON	650—750
P/S ON	700—800
A/C ON and refrigerant pressure switch (middle) OFF	700—800
A/C ON and refrigerant pressure switch (middle) ON	700—800

Idle speed (LF engine MTX model)

Condition	Engine speed (rpm)*1
No load	600—700
Electrical loads*2 ON	650—750
P/S ON	650—750
A/C ON and refrigerant pressure switch (middle) OFF	700—800
A/C ON and refrigerant pressure switch (middle) ON	700—800

Idle speed (LF engine ATX model)

Condition	Engine speed (rpm)*1
No load	650—750
Electrical loads*2 ON	650—750
P/S ON	650—750
A/C ON and refrigerant pressure switch (middle) OFF	650—750
A/C ON and refrigerant pressure switch (middle) ON	700—800

Idle speed (L3 engine model)

Condition	Engine speed (rpm)*1
No load	600—700
Electrical loads*2 ON	650—750
P/S ON	650—750
A/C ON and refrigerant pressure switch (middle) OFF	700—800
A/C ON and refrigerant pressure switch (middle) ON	700—800

*1 : Excludes temporary idle speed drop just after the electrical loads are turned on.
*2 : Blower motor is operating at high speed. Headlight switch is turned on. Rear window defroster switch is turned on. Cooling fans are operating.

F

IDLE MIXTURE INSPECTION

A6E390802000W03

1. Turn off the electrical loads.
2. Warm up the engine as follows.
   (1) Start the engine.
   (2) Maintain the engine speed at **approx. 3,000 rpm** until the cooling fans start to operate.
   (3) Release the accelerator pedal.
   (4) Wait until the cooling fans stop.
3. Verify that the idle speed and ignition timing are within the specification. (See F–8 IDLE SPEED INSPECTION.) (See F–8 IGNITION TIMING INSPECTION.)
4. Insert an exhaust gas analyzer to the tailpipe.
5. Verify that the CO and HC concentrations are within the regulation.

INTAKE-AIR SYSTEM

VACUUM HOSE ROUTING DIAGRAM

A6E391020030W01

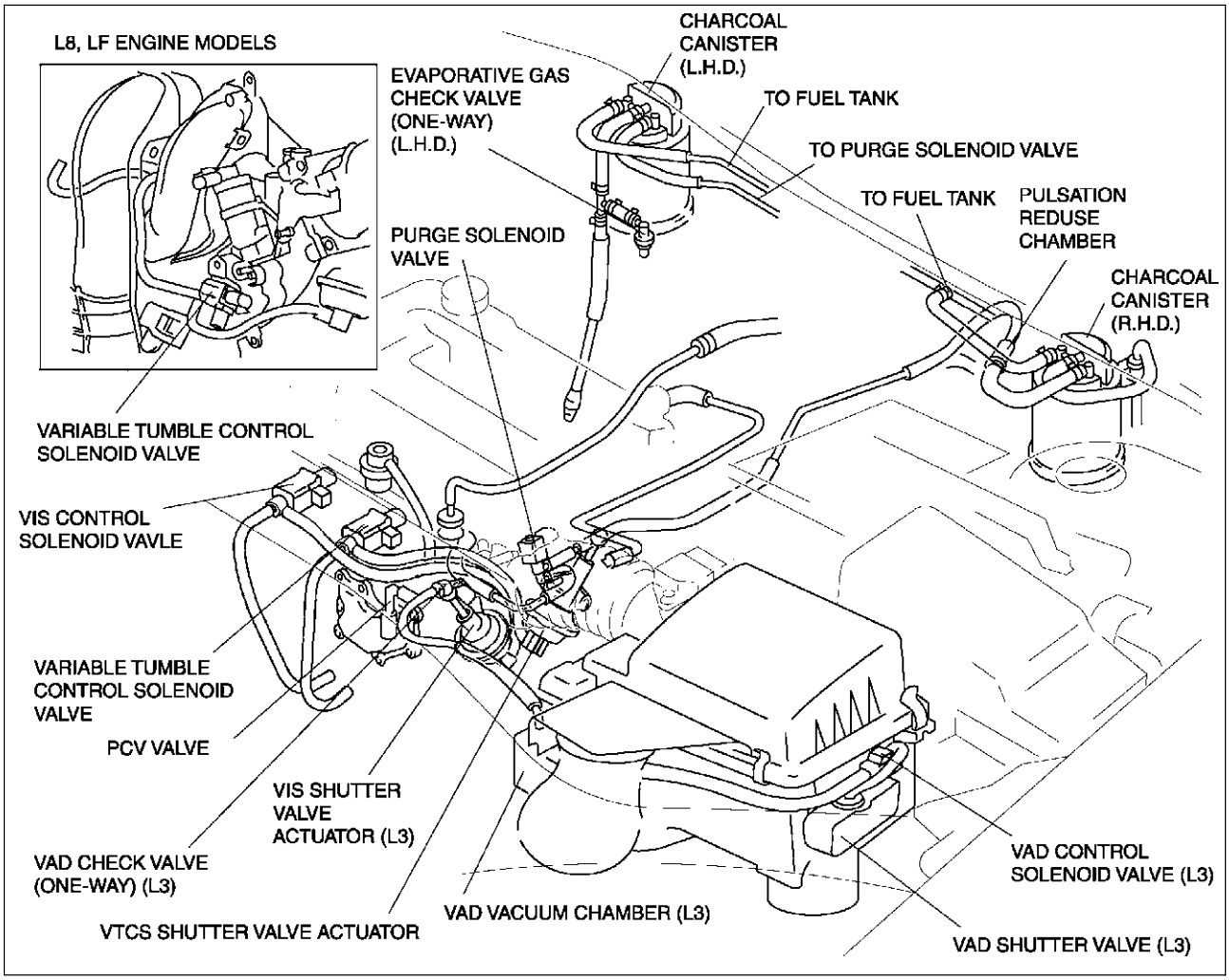

A6E3910W034

INTAKE-AIR SYSTEM REMOVAL/INSTALLATION

A6E391013000W01

Warning

- **When the engine and intake-air system are hot, they can badly burn. Turn off the engine and wait until they are cool before removing the intake-air system.**
- **Fuel vapor is hazardous. It can easily ignite, causing serious injury and damage. Always keep sparks and flames away from fuel.**
- **Fuel line spills and leakage are dangerous. Fuel can ignite and cause serious injuries or death and damage. Fuel can also irritate skin and eyes. To prevent this, always complete the "Fuel Line Safety Procedure". (See F–17 BEFORE REPAIR PROCEDURE.)**

1. Disconnect the negative battery cable.
2. Remove in the order indicated in the table.
3. Install in the reverse order of removal.

4. Complete the “AFTER REPAIR PROCEDURE”. (See F–17 AFTER REPAIR PROCEDURE.)

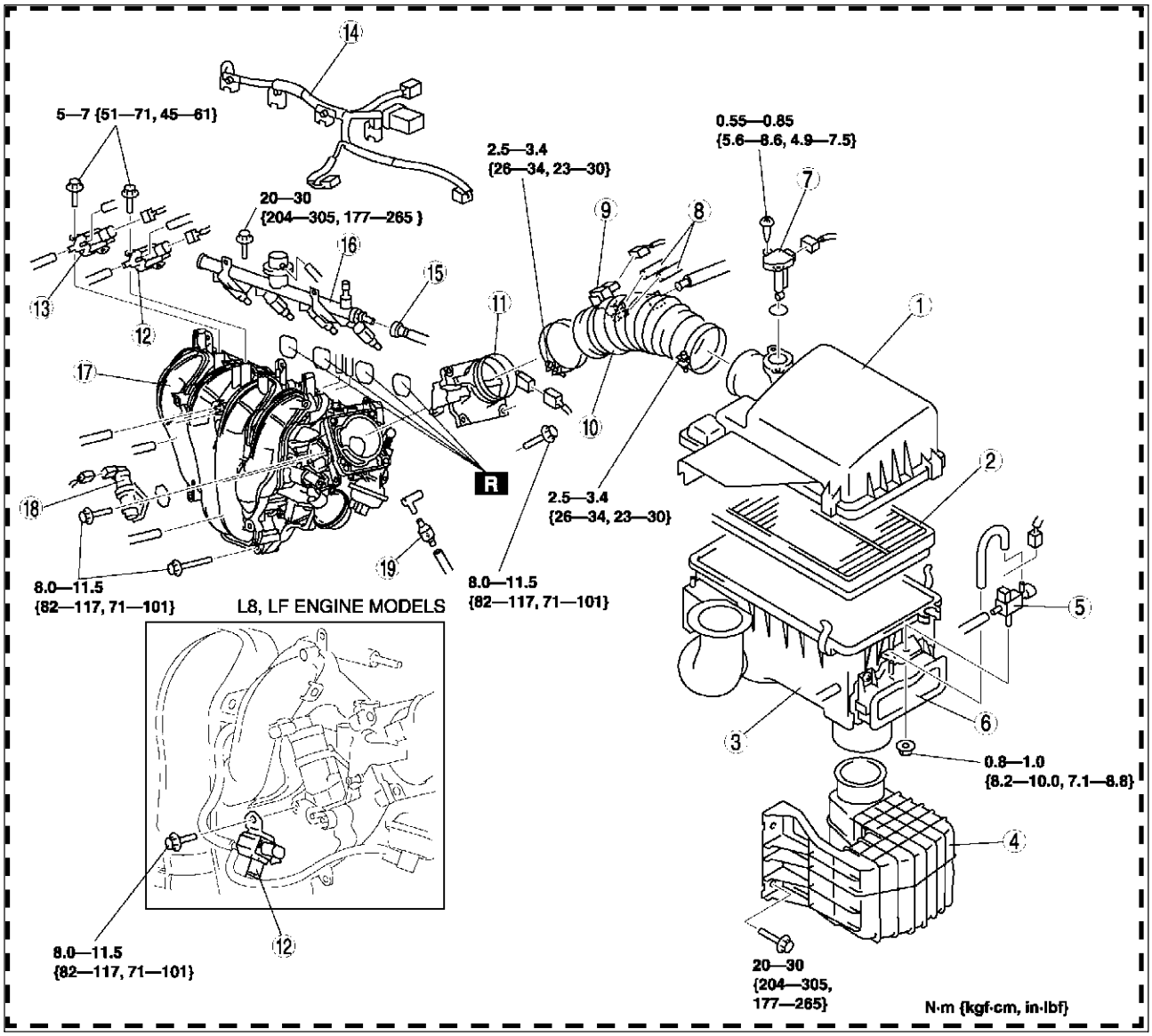

A6E3910W019

1	Air cleaner cover
2	Air cleaner element
3	Air cleaner case
4	Resonance chamber (See F–12 Resonance Chamber Removal Note)
5	VAD control solenoid valve (L3)
6	VAD shutter valve (L3)
7	Mass air flow sensor
8	Vacuum hose (purge solenoid valve) (See F–12 Vacuum Hose (Purge Solenoid Valve) Installation Note)
9	Purge solenoid valve

10	Air hose
11	Throttle body
12	Variable tumble control solenoid valve
13	VIS control solenoid valve (L3)
14	Fuel injector connector
15	Plastic fuel hose (See F–28 Plastic Fuel Hose Removal Note) (See F–30 Plastic Fuel Hose Installation Note)
16	Fuel distributor
17	Intake manifold
18	IAC valve
19	VAD check valve (L3)

Resonance Chamber Removal Note

1. Remove the front mudguard (LH) before removing the resonance chamber.

Vacuum Hose (Purge Solenoid Valve) Installation Note

1. Fit the vacuum hose (purge solenoid valve) onto the respective fittings, and install clamps as shown.

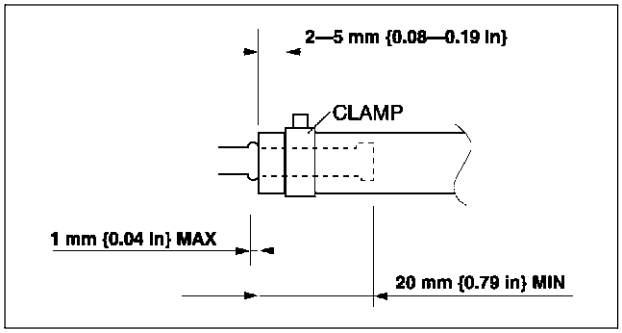

A6E3910W021

VARIABLE AIR DUCT (VAD) SHUTTER VALVE INSPECTION (L3)

A6E391013000W02

1. Remove the air cleaner case. (See F–10 INTAKE-AIR SYSTEM REMOVAL/INSTALLATION.)
2. Disconnect the vacuum hose from the VAD shutter valve actuator.
3. Connect a vacuum pump to the VAD shutter valve actuator.
4. Apply vacuum and verify that the rod moves.
   - If the rod dose not move, replace the air cleaner.

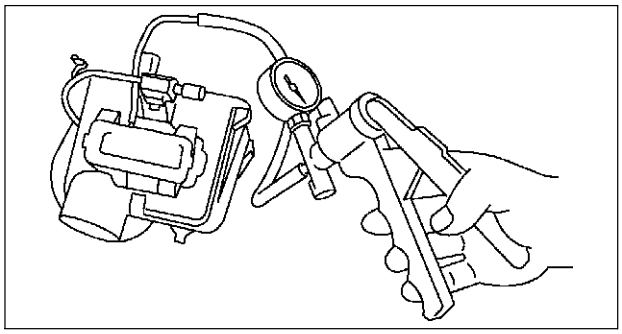

A6E3910W031

Vacuum kPa {mmHg, inHg}	Rod movement
Below –10 {–75, –3.0}	Starts to move
Above –35 {–263, –10.4}	Fully pulled

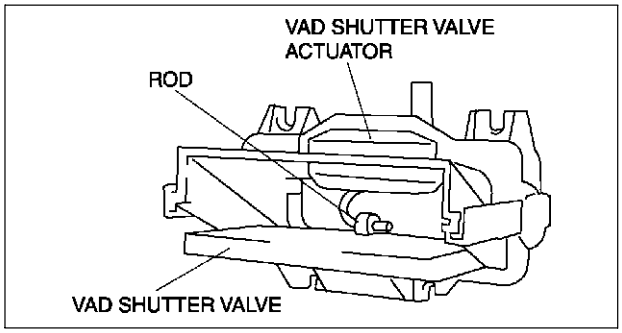

A6E3910W032

VARIABLE AIR DUCT (VAD) CONTROL SOLENOID VALVE INSPECTION (L3)

A6E391013000W03

1. Remove the VAD control solenoid valve. (See F–10 INTAKE-AIR SYSTEM REMOVAL/INSTALLATION.)
2. Inspect airflow between the ports under the following conditions.
   - If not as specified, replace the VAD control solenoid valve.
   - If as specified, carry out the “Circuit Open/ Short Inspection”.

: Airflow

Step	Terminal		Port		
	A	B	A	B	C
1			○—○		
2	B+	GND	○		○

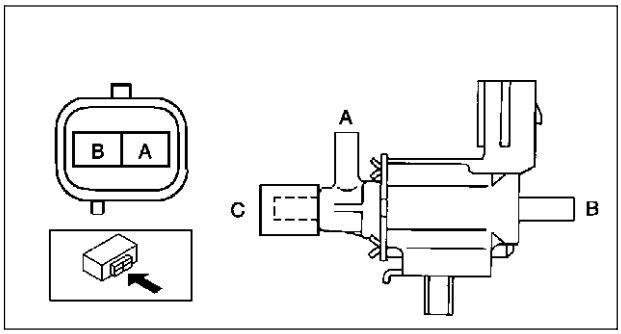

A6E3910W036

A6E3910W037

Circuit Open/Short Inspection

1. Disconnect the PCM connector. (See F–43 PCM REMOVAL/INSTALLATION.)
2. Inspect the following wiring harness for open or short (continuity check).

Open circuit

- If there is no continuity, the circuit is open. Repair or replace the harness.
  - — VAD control solenoid valve terminal B (harness-side) and PCM terminal 4C
  - — VAD control solenoid valve terminal A (harness-side) and main relay terminal C (harness-side)

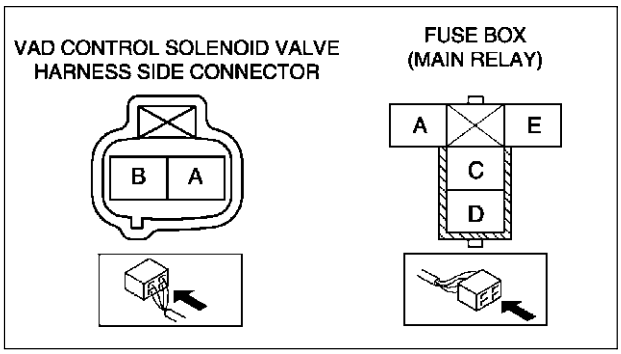

A6E3910W038

Short circuit

- If there is continuity, the circuit is shorted. Repair or replace the harness.
  - — VAD control solenoid valve terminal B (harness-side) and body GND
  - — VAD control solenoid valve terminal A (harness-side) and power supply

VARIABLE AIR DUCT (VAD) CHECK VALVE (ONE-WAY) INSPECTION (L3)

A6E391013000W04

1. Remove the VAD check valve (one-way). (See F–10 INTAKE-AIR SYSTEM REMOVAL/INSTALLATION
2. Blow through A and verify that air flows from B.
3. Blow through B and verify that air does not flow from A.
   - If not as specified, replace the VAD check valve (one-way).

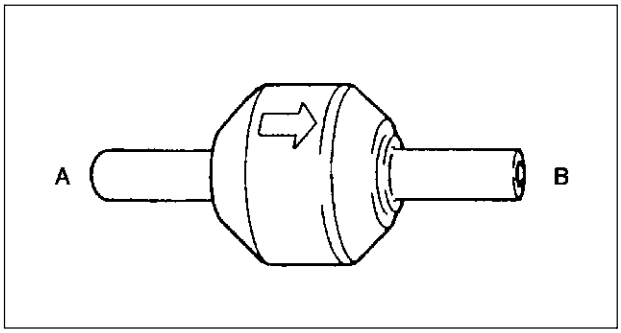

A6E3910W039

IDLE AIR CONTROL (IAC) VALVE INSPECTION

A6E391020661W01

Note

- Perform the following inspection only when directed.

Operation Test

1. Carry out the “Idle Air Control Inspection”. (See F–229 Idle Air Control System Inspection.)
   - If not as specified, perform the further inspection for the IAC valve.

Resistance Inspection

1. Disconnect the negative battery cable.

2. Disconnect the IAC valve connector.
3. Measure the resistance between the IAC valve terminals using an ohmmeter.
   - If not as specified, replace the IAC valve. (See F–10 INTAKE-AIR SYSTEM REMOVAL/INSTALLATION.)
   - If as specified but the Operation Test is failed, carry out the “Circuit Open/Short Inspection”.

Specification

Ambient temperature (°C {°F})	Resistance (ohms)
23 {73}	8.8—10.6

Circuit Open/Short Inspection

1. Disconnect the PCM connector. (See F–43 PCM REMOVAL/INSTALLATION.)
2. Inspect the following wiring harnesses for open or short (continuity check).

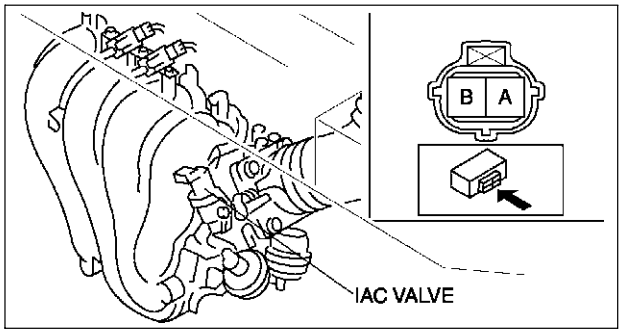

A6E3910W003

Open circuit

- If there is no continuity, the circuit is open. Repair or replace the harness.
  - — IAC valve terminal A (harness-side) and PCM terminal 4G
  - — IAC valve terminal B (harness-side) and PCM terminal 4J

Short circuit

- If there is continuity, the circuit is shorted. Repair or replace the harness.
  - — IAC valve terminal A (harness-side) and power supply
  - — IAC valve terminal A (harness-side) and GND
  - — IAC valve terminal B (harness-side) and power supply
  - — IAC valve terminal B (harness-side) and GND

VARIABLE INTAKE-AIR SYSTEM (VIS) SHUTTER VALVE ACTUATOR INSPECTION (L3)

A6E391013000W05

1. Remove the air hose. (See F–10 INTAKE-AIR SYSTEM REMOVAL/INSTALLATION.)
2. Disconnect the vacuum hose from the VIS shutter valve actuator.
3. Connect a vacuum pump to the VIS shutter valve actuator.
4. Apply vacuum and verify that the rod moves.
   - If the rod dose not move, replace the intake manifold.

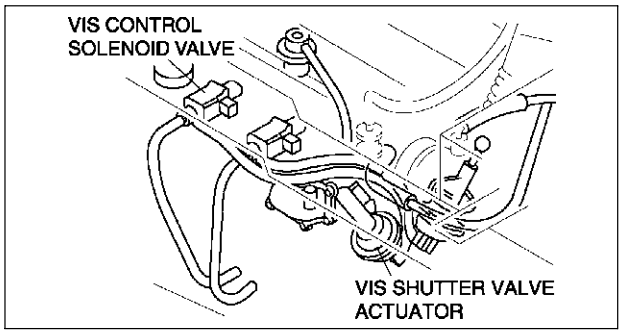

A6E3910W008

Vacuum kPa {mmHg, inHg}	Rod movement
Below –2.7 {–20, –0.7 }	Starts to move
Above –34.7 {–260, –10.2 }	Fully pulled

VARIABLE INTAKE-AIR SYSTEM (VIS) CONTROL SOLENOID VALVE INSPECTION (L3)

A6E391013000W06

1. Remove the VIS control solenoid valve. (See F–10 INTAKE-AIR SYSTEM REMOVAL/INSTALLATION.)
2. Inspect airflow between the ports under the following conditions.
   - If not as specified, replace the VIS control solenoid valve.
   - If as specified, carry out the “Circuit Open/Short Inspection”.

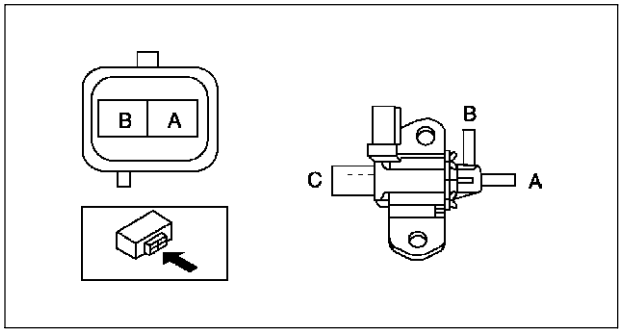

A6E3910W010

: Airflow

Step	Terminal		Port		
	A	B	A	B	C
1				○—○	
2	B+	GND	○	○	

A6E3910W009

Circuit Open/Short Inspection

1. Disconnect the PCM connector. (See F–43 PCM REMOVAL/INSTALLATION.)
2. Inspect the following wiring harness for open or short (continuity check).

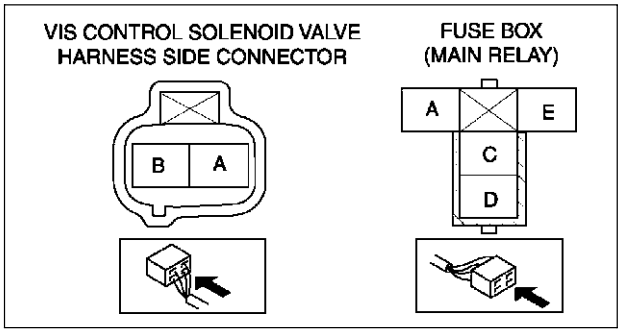

A6E3910W011

Open circuit

- If there is no continuity, the circuit is open. Repair or replace the harness.
  - — VIS control solenoid valve terminal A (harness-side) and PCM terminal 4R
  - — VIS control solenoid valve terminal B (harness-side) and main relay terminal C (harness-side)

Short circuit

- If there is continuity, the circuit is shorted. Repair or replace the harness.
  - — VIS control solenoid valve terminal A (harness-side) and body GND
  - — VIS control solenoid valve terminal B (harness-side) and power supply

VARIABLE TUMBLE CONTROL SYSTEM (VTCS) SHUTTER VALVE ACTUATOR INSPECTION

A6E391013000W07

1. Remove the air hose. (See F–10 INTAKE-AIR SYSTEM REMOVAL/INSTALLATION.)
2. Disconnect the vacuum hose from the VTCS shutter valve actuator.
3. Connect a vacuum pump to the VTCS shutter valve actuator.
4. Apply vacuum and verify that the rod moves.
   - If the rod dose not move, replace the intake manifold.

Vacuum kPa {mmHg, inHg}	Rod movement
Below –2.7 {–20, –0.7 }	Starts to move
Above –34.7 {–260, –10.2 }	Fully pulled

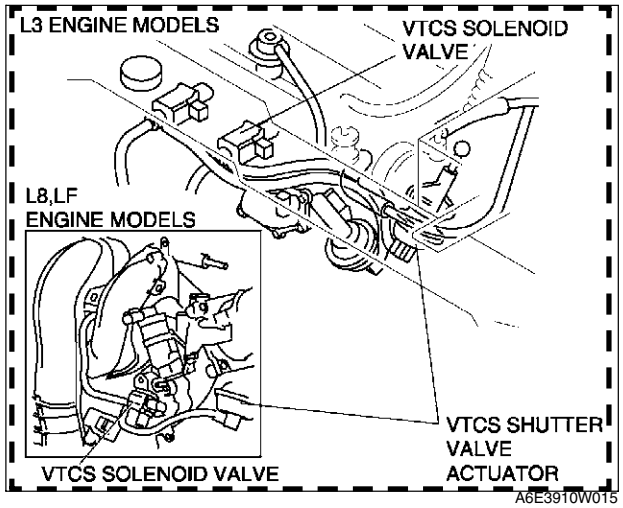

A6E3910W015

VARIABLE TUMBLE CONTROL SOLENOID VALVE INSPECTION

A6E391013000W08

1. Remove the variable tumble control solenoid valve. (See F–10 INTAKE-AIR SYSTEM REMOVAL/INSTALLATION.)
2. Inspect airflow between the ports under the following conditions.
   - If not as specified, replace the variable tumble control solenoid valve.
   - If as specified, carry out the “Circuit Open/Short Inspection”.

: Airflow

Step	Terminal		Port		
	A	B	A	B	C
1				○	○
2	B+	GND	○	○	

A6E3910W009

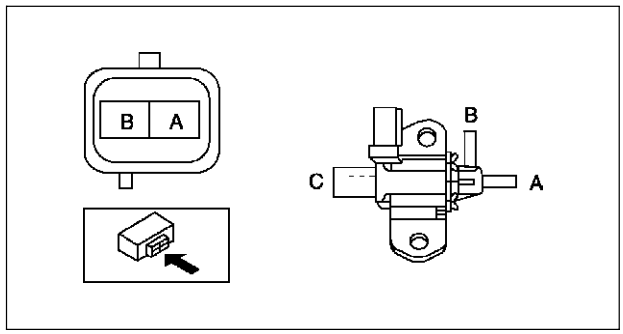

A6E3910W016

Circuit Open/Short Inspection

1. Disconnect the PCM connector. (See F–43 PCM REMOVAL/INSTALLATION.)

2. Inspect the following wiring harness for open or short (continuity check).

Open circuit

- If there is no continuity, the circuit is open. Repair or replace the harness.
  - — Variable tumble control solenoid valve terminal B (harness-side) and PCM terminal 4T
  - — Variable tumble control solenoid valve terminal A (harness-side) and main relay terminal C (harness-side)

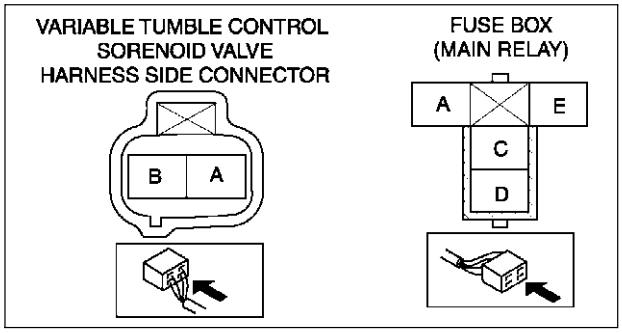

A6E3910W017

Short circuit

- If there is continuity, the circuit is shorted. Repair or replace the harness.
  - — Variable tumble control solenoid valve terminal B (harness-side) and body GND
  - — Variable tumble control solenoid valve terminal A (harness-side) and power supply

ACCELERATOR PEDAL REMOVAL/INSTALLATION

A6E391041600W01

1. Remove in the order indicated in the table.
2. Install in the reverse order of removal.

1	Accelerator cable F–16 Accelerator Cable Installation Note)
2	Accelerator pedal

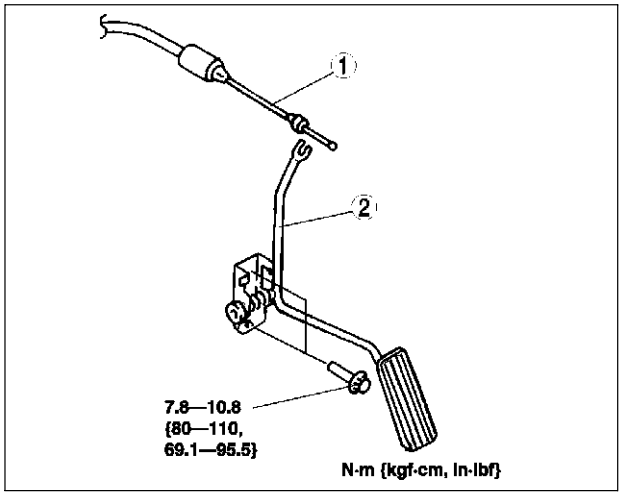

A6E3910W033

Accelerator Cable Installation Note

1. Carry out the “ACCELERATOR CABLE INSTALLATION/ADJUSTMENT” procedure after installing the accelerator cable. (See F–16 ACCELERATOR CABLE INSPECTION/ ADJUSTMENT.)

ACCELERATOR CABLE INSPECTION/ADJUSTMENT

A6E391041660W01

1. Verify that the throttle valve is closed.
2. Pull the accelerator cable in the directions of A and B, and measure the free play.
   - If not as specified, adjust by turning locknut C.

Free play
1.0—3.0 mm {0.04—0.11 in}

Tightening torpue
9.8—14.7 N·m {100—150 kgf·cm, 87—130 in·lbf}

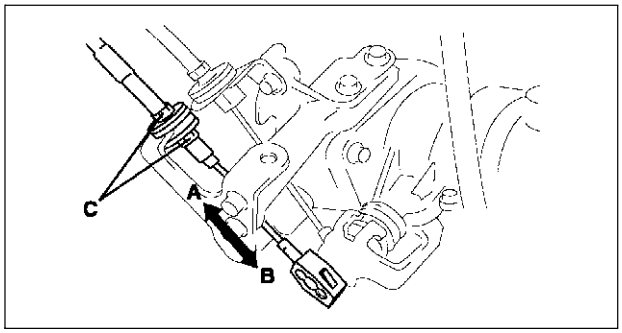

A6E3910W030

FUEL SYSTEM

BEFORE REPAIR PROCEDURE

A6E391201006W01

Warning
- **Fuel vapor is hazardous. It can easily ignite, causing serious injury and damage. Always keep sparks and flames away from fuel.**
- **Fuel line spills and leakage are dangerous. Fuel can ignite and cause serious injuries or death and damage. Fuel can also irritate skin and eyes. To prevent this, always complete the following "Fuel Line Safety Procedure".**

Fuel Line Safety Procedure

Note
- Fuel in the fuel system is under high pressure also when the engine is not running.

1. Remove the fuel-filler cap and release the pressure in the fuel tank.
2. Remove the fuel pump relay.
3. Start the engine.
4. After the engine stalls, crank the engine several times.
5. Turn the ignition switch to LOCK position.
6. Install the fuel pump relay.

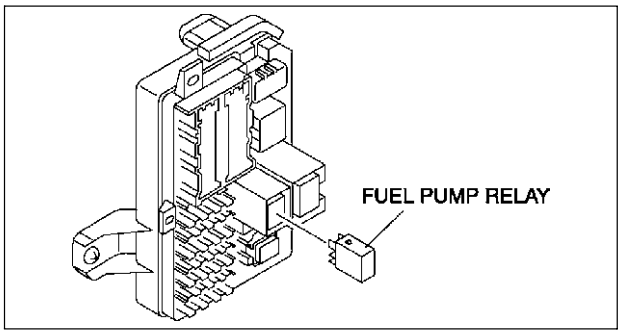

A6E3912W014

AFTER REPAIR PROCEDURE

A6E391201006W02

Warning
- **Fuel line spills and leakage are dangerous. Fuel can ignite and cause serious injuries or death and damage. When installing the fuel hose, observe "Fuel Leakage Inspection" described below.**

Fuel Leakage Inspection

Warning
- **Fuel line spills and leakage are dangerous. Fuel can ignite and cause serious injuries or death and damage. Always carry out the following procedure with the engine stopped.**

Caution
- **Connecting the wrong check connector terminal may possibly cause malfunction. Carefully connect the specified terminal only.**

1. Short the check connector terminal F/P to body GND using a jumper wire.
2. Turn the ignition switch to ON position to operate the fuel pump.
3. Pressurize the system in this way for **at least 5 minutes** to be sure of no leakage.
   - If there is fuel leakage, inspect the fuel hoses, hose clamps, and fuel pipe sealing surface, and replace as necessary.
4. After repair, assemble the system and repeat Steps 1 to 3.

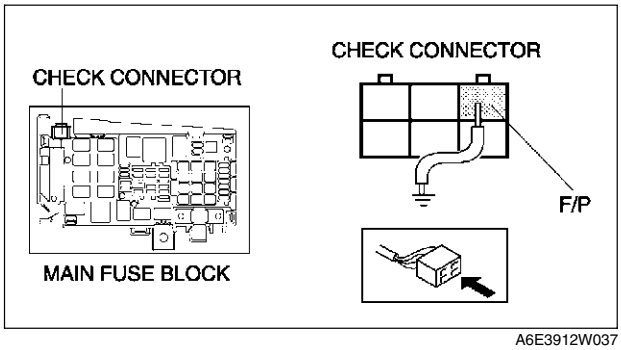

A6E3912W037

FUEL TANK REMOVAL/INSTALLATION

A6E391242110W01

Warning

- **Repairing a fuel tank that has not been properly steam cleaned can be dangerous. Explosion or fire may cause death or serious injury. Always properly steam clean a fuel tank before repairing it.**
- **Fuel line spills and leakage are dangerous. Fuel can ignite and cause serious injuries or death and damage. Fuel can also irritate skin and eyes. To prevent this, do not damage the sealing surface of the fuel pump unit when removing or installing.**

Caution

- **Disconnecting/connecting the quick release connector without cleaning it may possibly cause damage to the fuel pipe and quick release connector. Always clean the quick release connector joint area before disconnecting/connecting using a cloth or soft brush, and make sure that it is free of foreign material.**

1. Level the vehicle.
2. Complete the “BEFORE REPAIR PROCEDURE”. (See F–17 BEFORE REPAIR PROCEDURE.)
3. Disconnect the negative battery cable.
4. Remove the fuel pump unit. (See F–22 FUEL PUMP UNIT REMOVAL/INSTALLATION.)
5. Siphon the fuel from the fuel tank.
6. Remove the middle pipe. (See F–35 EXHAUST SYSTEM REMOVAL/INSTALLATION.)
7. Remove in the order indicated in the table.
8. Install in the reverse order of removal.
9. Complete the “AFTER REPAIR PROCEDURE”. (See F–17 AFTER REPAIR PROCEDURE.)

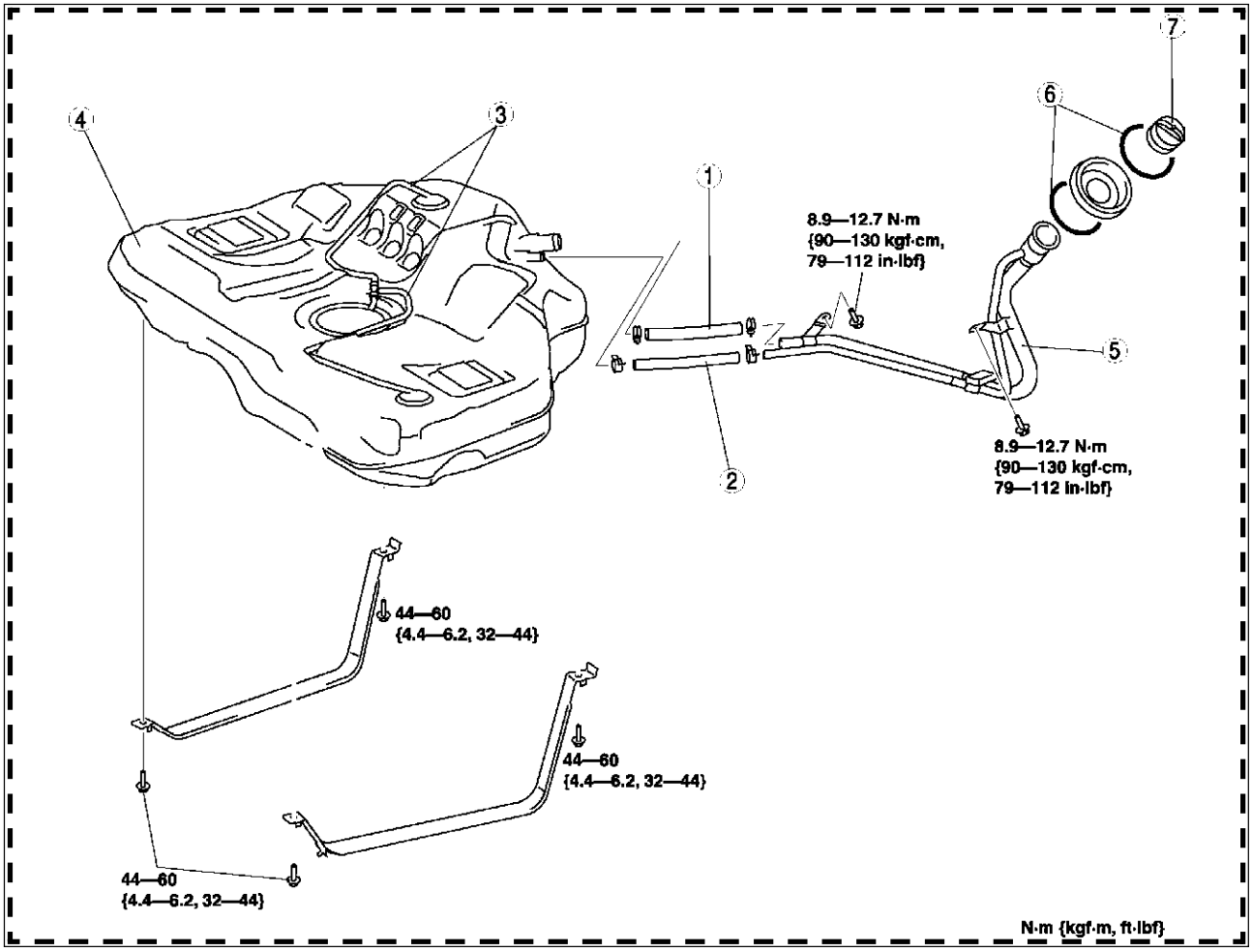

A6E3912W013

1	Joint hose (See F–19 Joint Hose Installation Note)
2	Breather hose (See F–19 Breather Hose Installation Note)
3	Evaporative hose

4	Fuel tank
5	Fuel-filler pipe
6	C-ring
7	Filler cap

Breather Hose Installation Note

1. Fit the breather hose onto the respective fittings, and install clamps as shown.

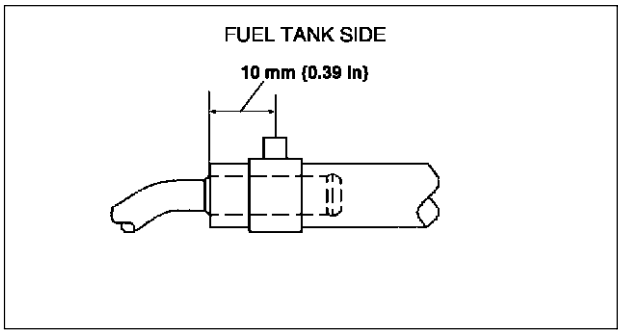

A6E3912W038

Joint Hose Installation Note

1. Fit the joint hose onto the respective fittings, and install clamps as shown.

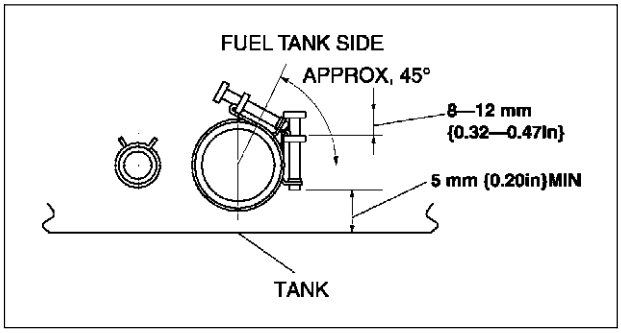

A6E3912W034

FUEL TANK INSPECTION

A6E391242110W02

Caution

- **Disconnecting/connecting the quick release connector without cleaning it may possibly cause damage to the fuel pipe and quick release connector. Always clean the quick release connector joint area before disconnecting/connecting using a cloth or soft brush, and make sure that it is free of foreign material.**

Note

- This inspection is for two rollover valves integrated in the fuel tank.

1. Disconnect the plastic fuel hose and the fuel pump unit connector. (See F–22 FUEL PUMP UNIT REMOVAL/INSTALLATION.)
2. Remove the fuel tank with the fuel pump unit. (See F–18 FUEL TANK REMOVAL/INSTALLATION.)
3. Plug the fuel pipe of the fuel pump unit.
4. Connect the pump to port A.
5. Level the fuel tank.
6. Apply pressure of **–2.0 kpa {–34 mmHg, –1.3 inHg}** to port A.
   (1) Plug port C and verify there is vacuum from port B.
      - If there is no vacuum, replace the fuel tank.
7. Apply pressure of **+5.9 kPa {+44 mmHg, +1.7 inHg}** to port A.
   - If there is no airflow, replace the fuel tank.
   - If there is airflow, turn the fuel tank upside-down and proceed to next step.

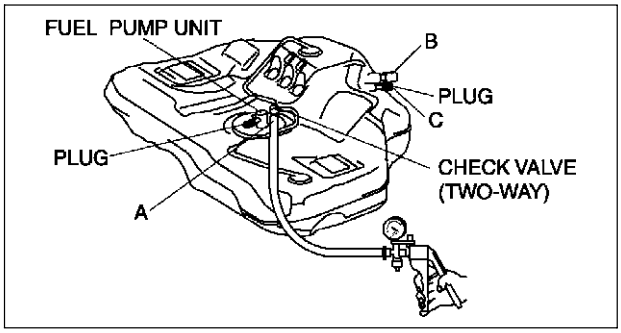

A6E3912W047

8. Turn the fuel tank upside-down and apply pressure of **–2.0 kPa {–15 mmHg, –0.6 inHg}** to port A.
   (1) Plug port C and verify there is no vacuum from port B.
   - If there is vacuum, replace the fuel tank.

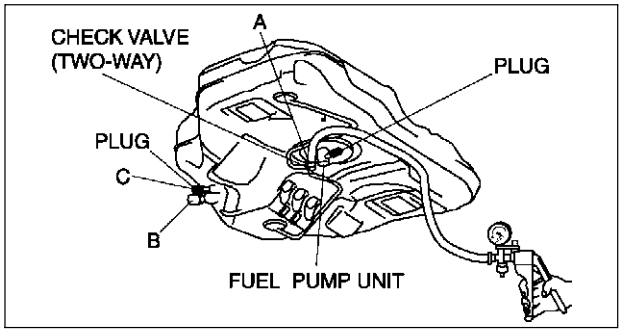

A6E3912W046

NONRETURN VALVE INSPECTION

A6E391242270W01

1. Remove the fuel pump unit. (See F–22 FUEL PUMP UNIT REMOVAL/INSTALLATION.)
2. Siphon the fuel from the fuel tank.

Note
- Nonreturn valve is integrated in the fuel tank.
- The nonreturn valve is normally closed by the spring force.

3. Verify that the nonreturn valve is closed.
   - If the nonreturn valve is stuck open and dose not open even when pulled up by a finger, replace the fuel tank.

FUEL LINE PRESSURE INSPECTION

A6E391201006W03

Warning
- **Fuel line spills and leakage are dangerous. Fuel can ignite and cause serious injuries or death. Fuel can also irritate skin and eyes. To prevent this, always complete the "BEFORE REPAIR PROCEDURE". (See F–17 BEFORE REPAIR PROCEDURE.)**

Caution
- **Disconnecting/connecting the quick release connector without cleaning it may possibly cause damage to the fuel pipe and quick release connector. Always clean the quick release connector joint area before disconnecting/connecting using cloth or soft brush, and make sure that it is free of foreign material.**

1. Complete the "BEFORE REPAIR PROCEDURE". (See F–17 BEFORE REPAIR PROCEDURE)
2. Disconnect the negative battery cable.

Caution
- **The quick release connector may be damaged if the tab is turned too far. Do not turn the tab over the stopper.**

3. Disconnect the quick release connector from the fuel tank as follows:
   (1) Push the tab on the locking coupler **90 degrees** until it stops.
   (2) Pull the fuel hose straight back.

Note

- The stopper may be removed from the quick connector. Take care not to loose it. Reinstall it to the quick release connector before reconnecting the fuel line.

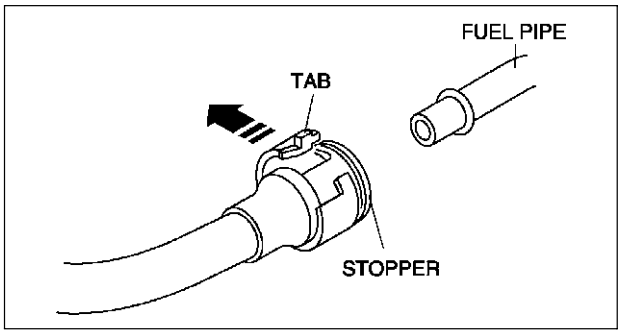

A6E3912W001

- The locking coupler has two internal locking tabs which retain the pulsation damper pipe. Be sure that the tab on the locking coupler is rotated until it stops to release two internal locking tabs.

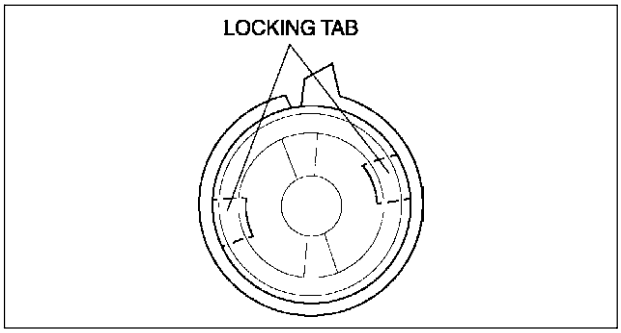

A6E3912W002

4. Push the **SST** quick release connector into the fuel pipe and plastic fuel hose into the **SST** until a click is heard.
5. Turn the lever parallel to the hose of the **SST** as shown.
6. Connect the negative battery cable.
7. Verify that the vehicles for AT is at N range and MT is at neutral position.
8. Start the engine and let it idle. Measure the fuel line pressure.
   - If not as specified, inspect the following:
     Zero or low
     — FP circuit
     — FP
     — Fuel line (clogged)
     — Fuel leakage inside pressure regulator
     High
     — Pressure regulator for high pressure cause

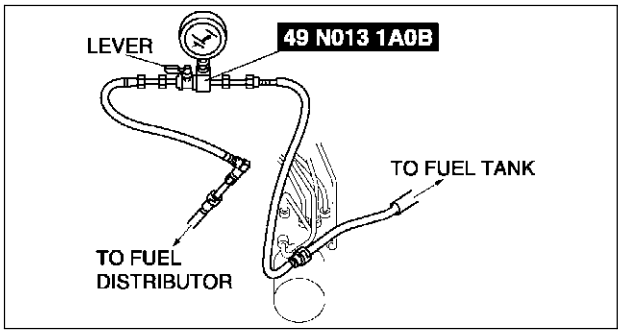

A6E3912W003

Fuel line pressure
375—450 kPa {3.9—4.5 kgf/cm^2, 55—65 psi}

9. Observe the fuel pressure gauge indicator during heavy acceleration.
10. Verify that the fuel pressure fluctuation is within the specification during the test.
    - If not as specified, inspect the following:
      — PCM
      — FP
      — Pulsation damper
      — Fuel line for improper routing, kinks or leakage

Fuel pressure fluctuation
365—450 kPa {3.8—4.5 kgf/cm^2, 53—65 psi}

11. Turn the ignition switch to the LOCK position.
12. Measure the fuel hold pressure **after 5 min**.
    - If not as specified, inspect the following:
      — FP hold pressure
      — Fuel injector for leakage
      — Fuel line for improper routing, kinks or leakage

Fuel hold pressure
More than 200 kPa {2.0 kgf/cm^2, 29 psi}

13. Complete the “BEFORE REPAIR PROCEDURE”. (See F–17 BEFORE REPAIR PROCEDURE)
14. Disconnect the **SST**.

Note
- A checker tab is integrated with quick release connector for new plastic fuel hoses. The checker tab will be released from the quick release connector after it is completely engaged with the fuel pipe.

15. Inspect the plastic fuel hose and fuel pipe sealing surface for damage and deformation, and replace as necessary.
    - If the quick release connector O-ring is damaged or has slipped, replace the plastic fuel hose.
16. Apply a small amount of clean engine oil to the sealing surface of the fuel pipe.
17. Reconnect the fuel main hose to the fuel distributor until a click is heard.
18. Lightly pull and push the quick release connector a few times by hand and verify that it can move **2.0—3.0 mm {0.08—0.11 in}** and it is connected securely.
    - If quick release connector does not move at all, verify that O-ring is not damaged and slipped, and reconnect the quick release connector.
19. Complete the “AFTER REPAIR PROCEDURE”. (See F–17 AFTER REPAIR PROCEDURE.)

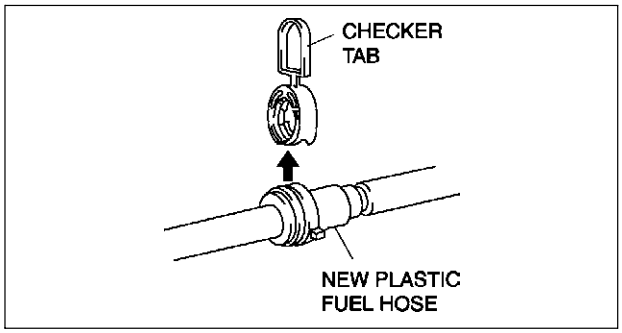

A6E3912W004

FUEL PUMP UNIT REMOVAL/INSTALLATION

A6E391213350W01

Warning
- **Fuel line spills and leakage are dangerous. Fuel can ignite and cause serious injuries or death and damage. Fuel can also irritate skin and eyes. To prevent this, do not damage the sealing surface of the fuel pump unit when removing or installing.**

Caution
- **Disconnecting/connecting the quick release connector without cleaning it may possibly cause damage to the fuel pipe and quick release connector. Always clean the quick release connector joint area before disconnecting/connecting using a cloth or soft brush, and make sure that it is free of foreign material.**

1. Complete the “BEFORE REPAIR PROCEDURE”. (See F–17 BEFORE REPAIR PROCEDURE.)
2. Disconnect the negative battery cable.
3. Remove the rear seat cushion.
4. Remove in the order indicated in the table.

1	Service hole cover
2	Connector
3	Plastic fuel hose (See F–23 Plastic Fuel Hose Removal Note) (See F–24 Plastic Fuel Hose Installation Note)
4	Fuel pump cap (See F–23 Fuel Pump Cap Removal Note)
5	Packing
6	Fuel pump unit (See F–24 Fuel Pump Unit Installation Note)

5. Install in the reverse order of removal.
6. Complete the “AFTER REPAIR PROCEDURE”. (See F–17 AFTER REPAIR PROCEDURE.)

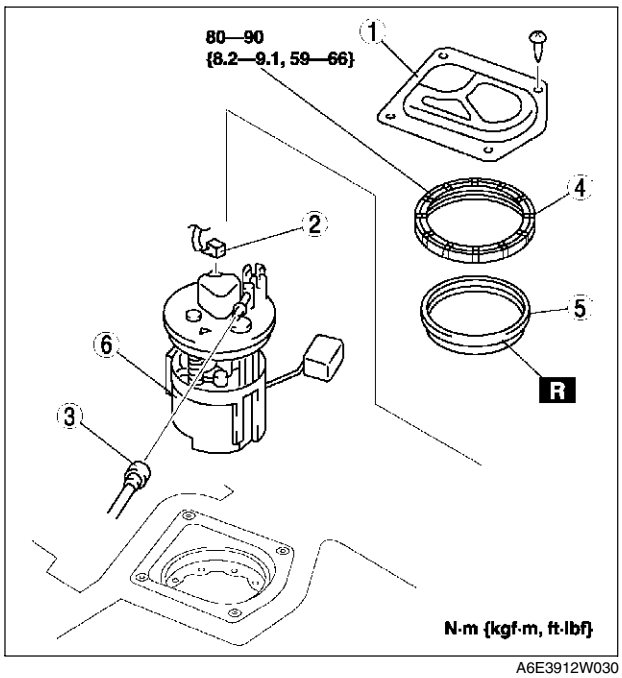

A6E3912W030

Plastic Fuel Hose Removal Note

Caution
- **The quick release connector may be damaged if the tab is bent excessively. Do not expand the tab over the stopper.**

1. Disconnect the quick release connector.
   (1) Push the tab on the locking coupler **90 degrees** until it stops.
   (2) Pull the fuel hose straight back.

Note
- The stopper may be removed from the quick connector. Take care not to lose it. Reinstall it to the quick release connector before reconnecting the fuel line.

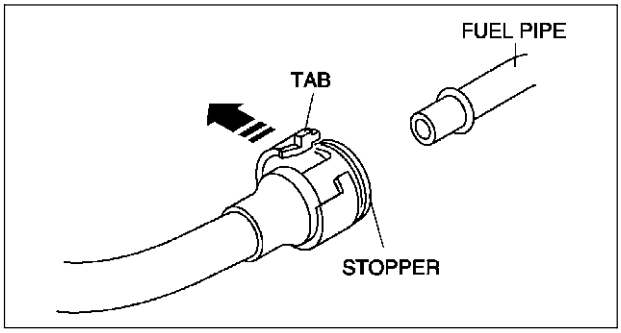

A6E3912W001

- The locking coupler has two internal locking tabs which retain the fuel pipe. Be sure that the tab on the locking coupler is rotated until it stops to release two internal locking tabs.

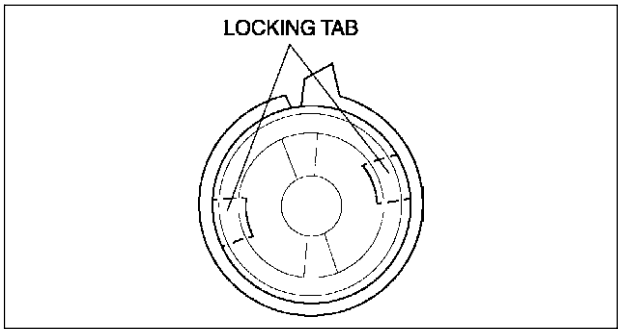

A6E3912W002

2. Cover the disconnected quick release connector and fuel pipe with vinyl sheets or the like to prevent them from being scratched or contaminated with foreign material.

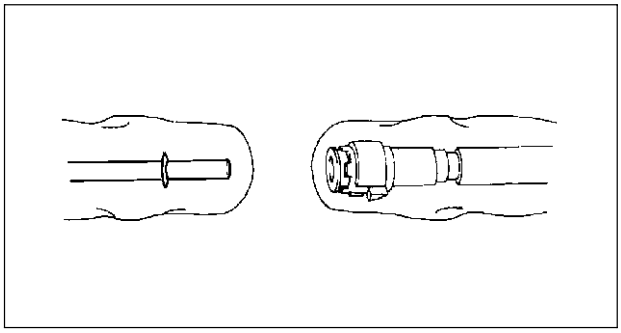
A6E3912W039

Fuel Pump Cap Removal Note

1. Using the **SST**, remove the fuel pump unit.

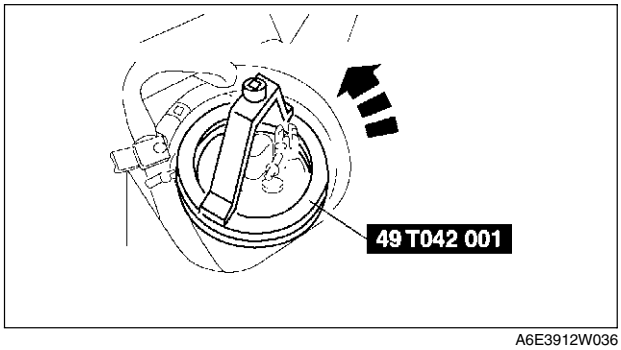

A6E3912W036

Fuel Pump Unit Installation Note

1. Verify that the fuel tank mark is aligened with the fuel pump mark as shown.

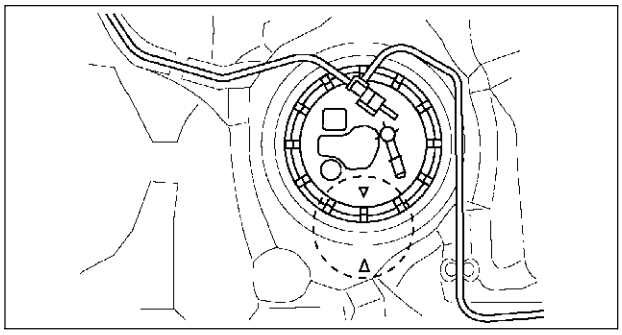

A6E3912W026

Plastic Fuel Hose Installation Note

Note

- A checker tab is integrated with quick release connector for new plastic fuel hoses. The checker tab will be released from the quick release connector after it is completely engaged with the fuel pipe.

1. When the retainer is not removed, perform the following procedure.
   (1) Inspect the fuel pump unit sealing surface for damage and deformation, and replace as necessary.
   - If the quick release connector O-ring is damaged, replace the plastic fuel hose.

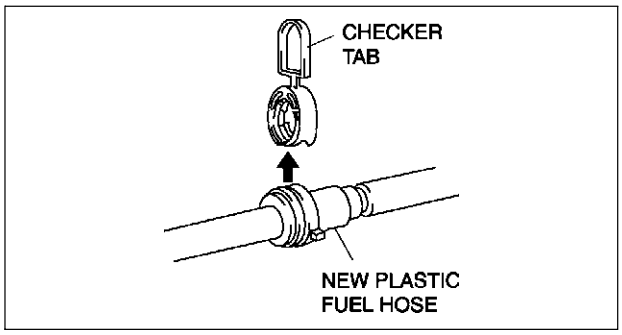

A6E3912W004

   (2) Slightly apply clean engine oil to the sealing surface of the fuel pump unit.
   (3) Align the fuel pipe on the fuel pump unit and quick release connector so that the tabs of the retainer are correctly fitted into the quick release connector. Push the quick release connector straight into the retainer until a click is heard.
   (4) Lightly pull and push the quick release connector a few times by hand and verify that it can move **2.0—3.0 mm {0.08—0.11 in}** and it is connected securely.
   - If quick release connector does not move at all, verify that O-ring is not damaged and slipped, and reconnect the quick release connector.

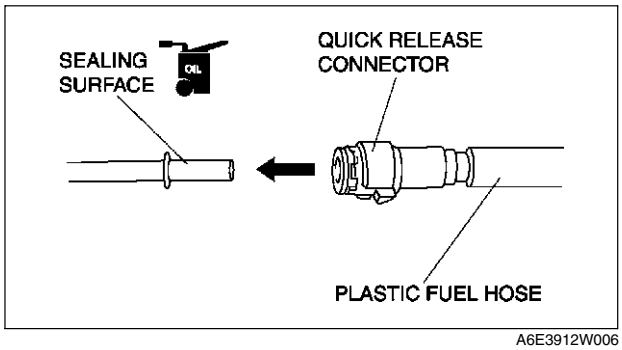

A6E3912W006

2. When the retainer is removed, perform the following procedure.

FUEL PUMP UNIT DISASSEMBLY/ASSEMBLY

A6E391213350W02

Warning

- **Fuel line spills and leakage are dangerous. Fuel can ignite and cause serious injuries or death and damage. Fuel can also irritate skin and eyes. To prevent this, do not damage the sealing surface of the fuel pump unit when removing or installing.**

1. Disassemble in the order indicated in the table.

2. Assemble in the reverse order of disassembly.

1	Packing
2	Fuel pump unit
3	Fuel gauge sender unit

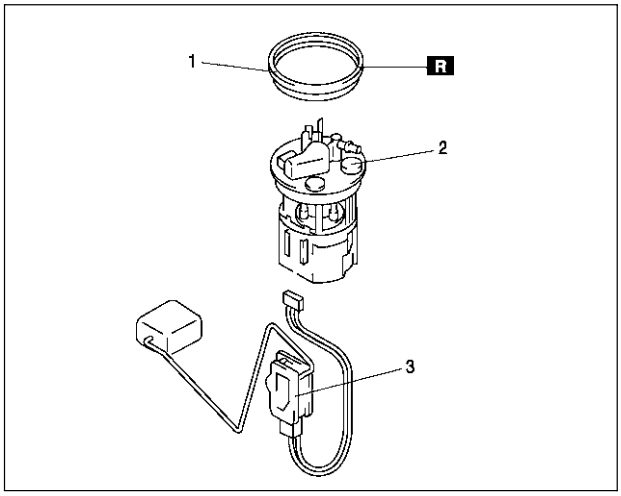

A6E3912W025

F

FUEL PUMP UNIT INSPECTION

A6E391213350W03

Caution

- **It is normal to hear the fuel pump operating when the ignition switch is turned to the ON position.**

Note

- To improve startability, the fuel pump control operates the fuel pump unit when the ignition switch is turned to the ON position. Due to this, fuel pressure is rapidly increased and fuel control is stabilized.

Continuity Inspection

Note

- Perform the following inspection only when directed.

1. Disconnect the negative battery cable.
2. Remove the service hole cover. (See F–22 FUEL PUMP UNIT REMOVAL/INSTALLATION.)
3. Disconnect the fuel pump unit connector.
4. Inspect for continuity between fuel pump unit connector terminals B and D.
   - If there is no continuity, replace the fuel pump body.
   - If as specified carry out the “Circuit Open/ Short Inspection”.

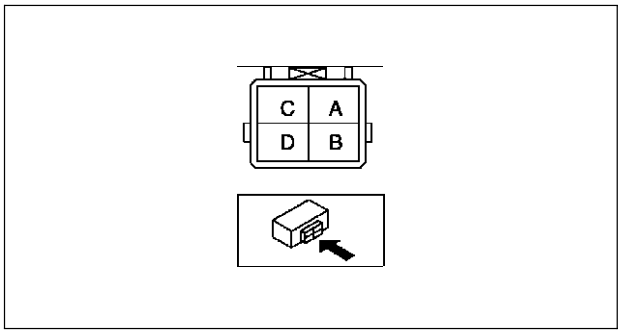

A6E3912W018

Circuit Open/Short Inspection

1. Inspect the following wiring harnesses for open or short circuit (continuity check).

Open circuit

- If there is no continuity, the circuit is open. Repair or replace the harness.
  - — Fuel pump unit terminal D (harness-side) and body GND.
  - — Fuel pump relay terminal D (harness-side) and fuel pump unit terminal B (harness-side).

Short circuit

- If there is continuity, the circuit is short. Repair or replace the harness.
  - — Fuel pump unit terminal D (harness-side) and power supply.
  - — Fuel pump unit terminal B (harness-side) and body GND.

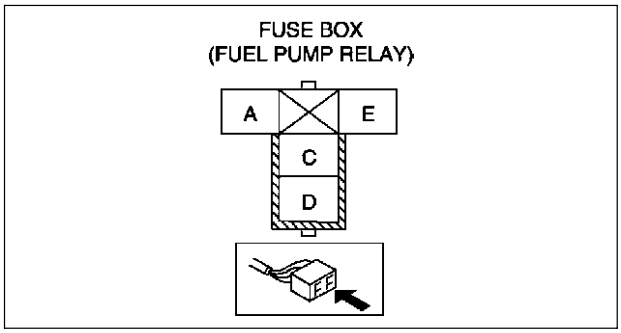

A6E3912W019

Fuel Pump Hold Pressure Inspection

Warning
- **Fuel line spills and leakage are dangerous. Fuel can ignite and cause serious injuries or death and damage. Always carry out the following procedure with the engine stopped.**

Caution
- **Disconnecting/connecting the quick release connector without cleaning it may possibly cause damage to the fuel pipe and quick release connector. Always clean the quick release connector joint area before disconnecting/connecting using a cloth or soft brush, and make sure that it is free of foreign material.**

Note
- Perform the following test only when directed.

1. Complete the “BEFORE REPAIR PROCEDURE”. (See F–17 BEFORE REPAIR PROCEDURE.)
2. Disconnect the negative battery cable.
3. Remove the air cleaner.

Caution
- **The quick release connector may be damaged if the tab is turned too far. Do not turn the tab over the stopper.**

4. Disconnect the quick release connector from the fuel tank as follows:
   (1) Push the tab on the locking coupler **90°** until it stops.
   (2) Pull the fuel hose straight back.

Note
- The stopper may be removed from the quick connector. Take care not to loose it. Reinstall it to the quick release connector before reconnecting the fuel line.

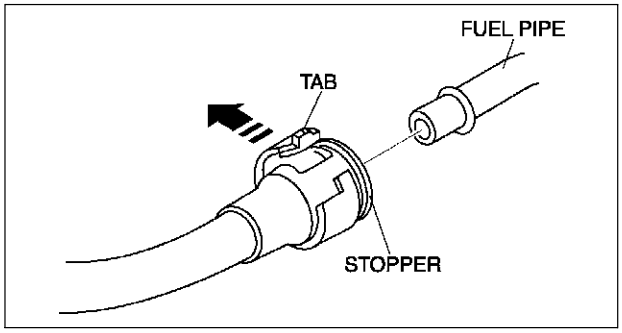

A6E3912W020

- The locking coupler has two internal locking tabs which retain the pulsation damper pipe. Be sure that the tab on the locking coupler is rotated until it stops to release two internal locking tabs.

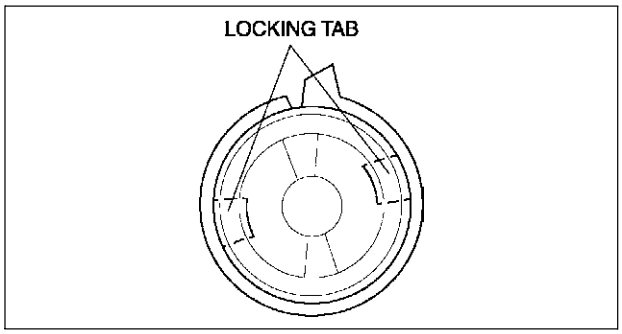

A6E3912W002

5. Cover the disconnected quick release connector with vinyl sheet or the like to prevent it from being scratched or contaminated with foreign material.

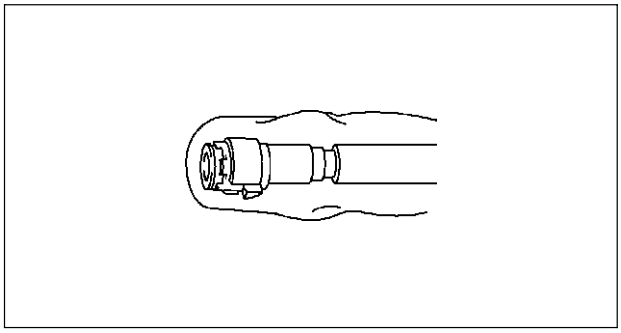

A6E3912W021

6. Turn the lever **90 degrees** against the hose of the **SST** to plug the **SST** outlet.
7. Push the **SST** quick release connector into the fuel pipe until a click is heard.
8. Set the fuel hose into a container to avoid fuel spills.
9. Connect the negative battery cable.

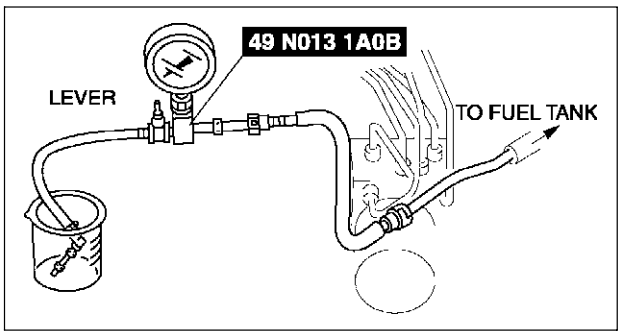

A6E3912W022

Caution

- **Connecting to the wrong check connector terminal may possibly cause malfunction. Carefully connect to the specified terminal only.**

10. Short the check connector terminal F/P to body GND using a jumper wire.
11. Turn the ignition switch to ON to operate the fuel pump.
12. Turn the ignition switch to LOCK position.
13. Measure the fuel pump hold pressure **after 5 minutes**.
    - If not as specified, replace the fuel pump after inspecting the following:
      — Fuel line for clogging or leakage

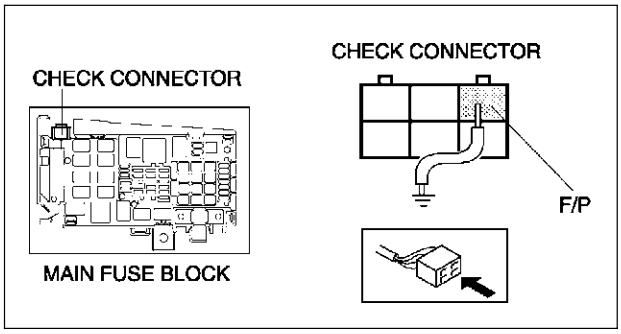

A6E3912W037

Fuel pump hold pressure
More than 200 kPa {2.0 kgf/cm^2, 29 psi}

14. Disconnect the jumper wire.
15. Disconnect the **SST**.

Note

- A checker tab is integrated with the quick release connector for new plastic fuel hoses. The checker tab will be released from the quick release connector after it is completely engaged with the fuel pipe.

16. Inspect the plastic fuel hose and fuel pipe sealing surface for damage and deformation, and replace as necessary.
    - If the quick release connector O-ring is damaged or has slipped, replace the plastic fuel hose.
17. Apply a small amount of clean engine oil to the sealing surface of the fuel pipe.
18. Reconnect the plastic fuel hose straight to the fuel pipe until a click is heard.
19. Lightly pull and push the quick release connector a few times by hand and verify that it can move **2.0—3.0 mm {0.08—0.11 in}** and it is connected securely.
    - If quick release connector does not move at all, verify that O-ring is not damaged and slipped, and reconnect the quick release connector.

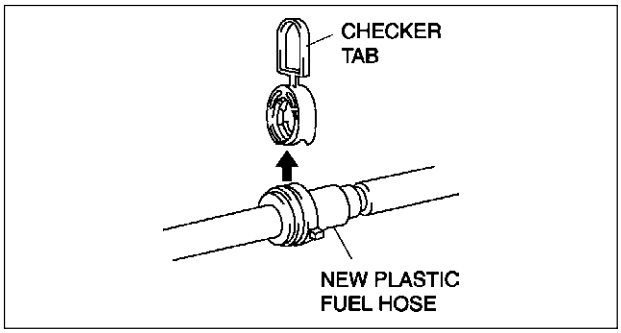

A6E3912W004

20. Complete the “AFTER REPAIR PROCEDURE”. (See F–17 AFTER REPAIR PROCEDURE.)

FUEL INJECTOR REMOVAL/INSTALLATION

A6E391213250W01

Caution

- **Disconnecting/connecting the quick release connector without cleaning it may possibly cause damage to the fuel pipe and quick release connector. Always clean the quick release connector joint area before disconnecting/connecting using a cloth or soft brush, and make sure that it is free of foreign material.**

1. Complete the “BEFORE REPAIR PROCEDURE”. (See F–17 BEFORE REPAIR PROCEDURE.)
2. Disconnect the negative battery cable.
3. Remove in the order indicated in the table.

1	Fuel injector connectors
2	Plastic fuel hose (See F–28 Plastic Fuel Hose Removal Note) (See F–30 Plastic Fuel Hose Installation Note)
2	Hose
4	Fuel distributor
5	Fuel injector (See F–29 Fuel Injector Removal Note) (See F–30 Fuel Injector Installation Note)
6	Snap ring
7	Pulsation damper

4. Install in the reverse order of removal.
5. Complete the “AFTER REPAIR PROCEDURE”. (See F–17 AFTER REPAIR PROCEDURE.)

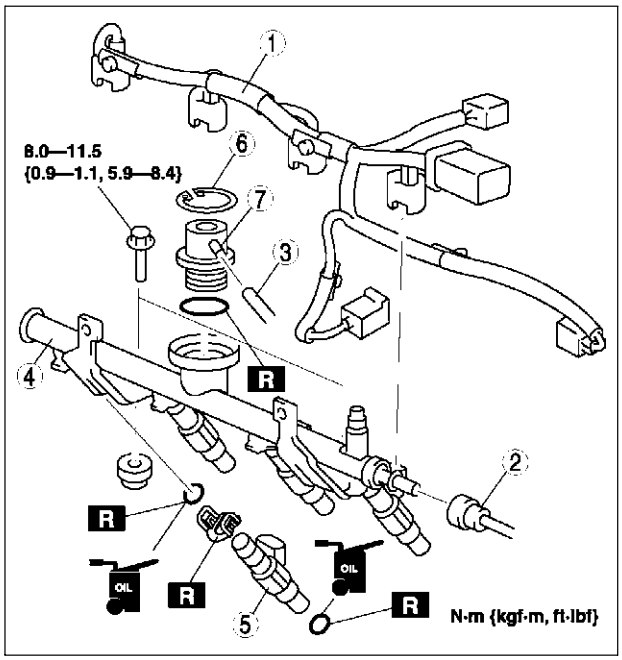

A6E3912W005

Plastic Fuel Hose Removal Note

Caution

- **The quick release connector may be damaged if the tab is bent excessively. Do not expand the tab over the stopper.**

1. Disconnect the quick release connector.
   (1) Push the tab on the locking coupler **90 degrees** until it stops.
   (2) Pull the fuel hose straight back.

Note

- The stopper may be removed from the quick connector. Take care not to lose it. Reinstall it to the quick release connector before reconnecting the fuel line.

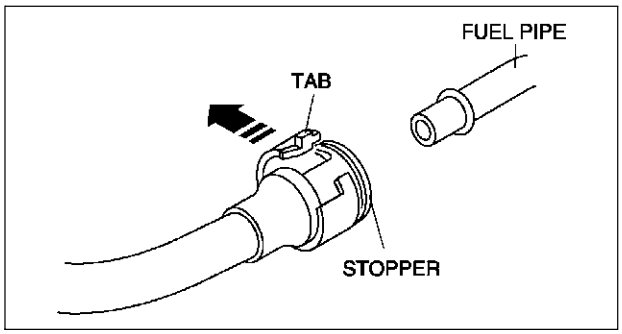

A6E3912W001

- The locking coupler has two internal locking tabs which retain the fuel pipe. Be sure that the tab on the locking coupler is rotated until it stops to release two internal locking tabs.

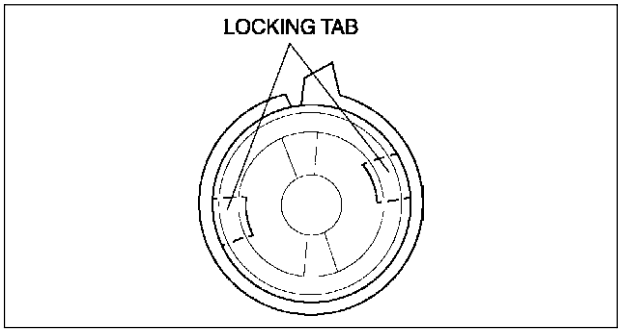

A6E3912W002

2. Cover the disconnected quick release connector and fuel pipe with vinyl sheets or the like to prevent them from being scratched or contaminated with foreign material.

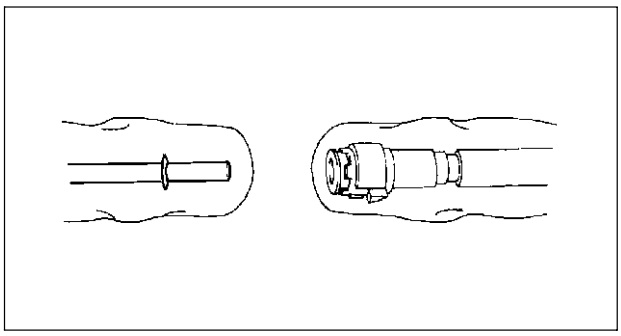

A6E3912W039

Fuel Injector Removal Note

Caution

- **Use of a deformed injector retaining clip will cause the injector to not engage correctly. Always use a new clip when reattaching the injector, otherwise it may cause the injector to rotate.**

1. Insert a screwdriver between the injector cup and the clip fingers.

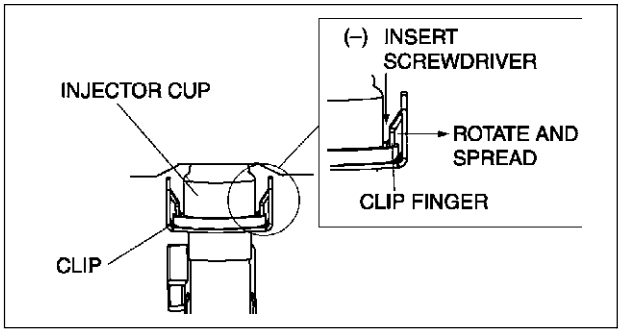

A6E3912W040

Note

- When rotating the screwdriver to spread the clip fingers, deform them sufficiently to make sure they release from the notched edge of the injector cup.

2. Rotate the screwdriver to spread the clip fingers and remove them from the injector cup.
3. Pull the injector and clip out of the rail.
4. Remove the clip from the injector according to the following:
   (1) Grasp the clip with a pair of pliers.

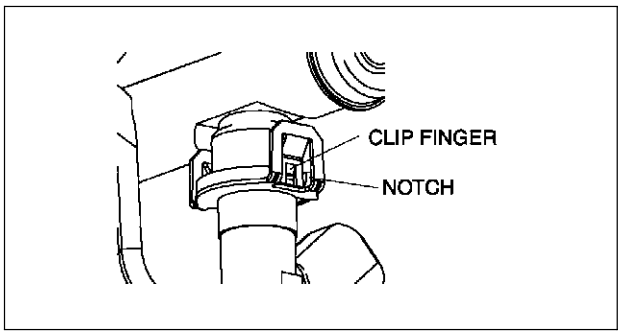

A6E3912W041

(2) Pull the clip parallel to the injector groove, and remove it from the injector.
(3) Discard the clip.

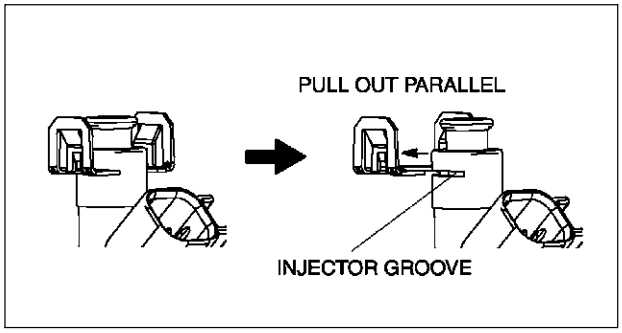

A6E3912W042

Fuel Injector Installation Note

1. Lightly lubricate the injector groove and O-ring.
2. Pre-attach a new clip in the injector groove.

Note
- When the clip is attached correctly, the central area of the injector and the clip finger positions are aligned.

3. Hold the injector firmly, push the clip into the injector until the clip stops sliding.
4. Verify that the injector connector position is correct, and press the injector and clip into the injector cup. Continue pressing until the clip contacts the lower surface of the injector cup.
5. Verify that the injector and clip are correctly attached with the clip locked onto the injector cup notch.

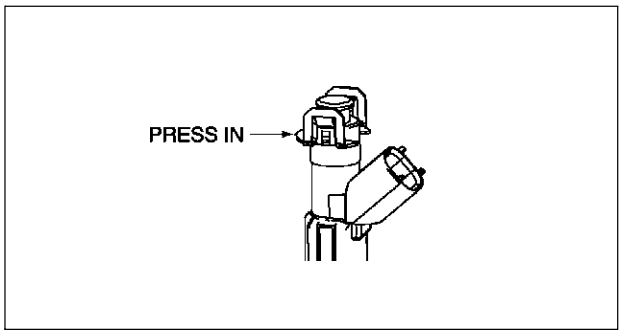

A6E3912W043

Plastic Fuel Hose Installation Note

Note
- A checker tab is integrated with quick release connector for new plastic fuel hoses. The checker tab will be released from the quick release connector after it is completely engaged with the fuel pipe.

1. When the retainer is not removed, perform the following procedure.
   (1) Inspect the fuel pump unit sealing surface for damage and deformation, and replace as necessary.
   - If the quick release connector O-ring is damaged, replace the plastic fuel hose.

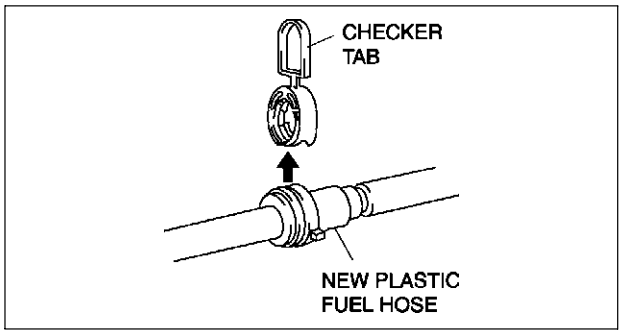

A6E3912W004

(2) Slightly apply clean engine oil to the sealing surface of the fuel pump unit.
(3) Align the fuel pipe on the fuel pump unit and quick release connector so that the tabs of the retainer are correctly fitted into the quick release connector. Push the quick release connector straight into the retainer until a click is heard.

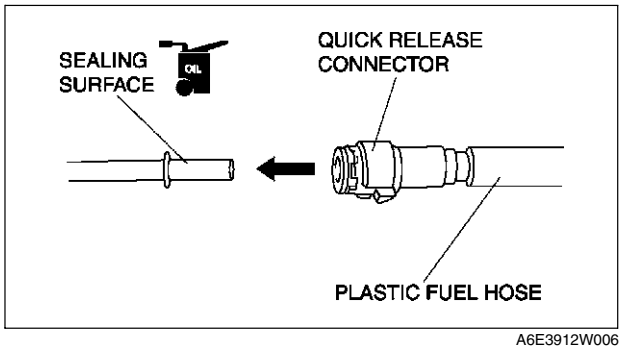

A6E3912W006

(4) Lightly pull and push the quick release connector a few times by hand and verify that it can move **2.0—3.0 mm {0.08—0.11 in}** and it is connected securely.
- If quick release connector does not move at all, verify that O-ring is not damaged and slipped, and reconnect the quick release connector.

2. When the retainer is removed, perform the following procedure.

FUEL INJECTOR INSPECTION

A6E391213250W02

Operation Test

1. Carry out the “Fuel Injector Operation Inspection”. (See F–231 Fuel Injector Operation Inspection.)
   - If not as specified, perform the further inspection for the fuel injectors.

Resistance Inspection

Note
- Perform the following test only when directed.

1. Turn the ignition switch to LOCK position.
2. Disconnect the negative battery cable.
3. Disconnect the fuel injector connectors.
4. Measure the resistance of the fuel injector using an ohmmeter.
   - If not as specified, replace the fuel injector. (See F–28 FUEL INJECTOR REMOVAL/INSTALLATION.)
   - If as specified but “Operation Test” is failed, carry out the “Circuit Open/Short Inspection”. Inspect for open or short circuit.

Resistance
11.4—12.6 ohms [20 °C {68 °F}]

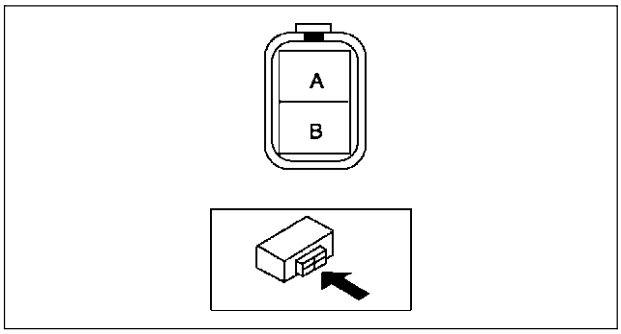

A6E3912W007

Circuit Open/Short Inspection

1. Disconnect the PCM connector. (See F–43 PCM REMOVAL/INSTALLATION.)
2. Inspect the following wiring harness for open or short (continuity check).

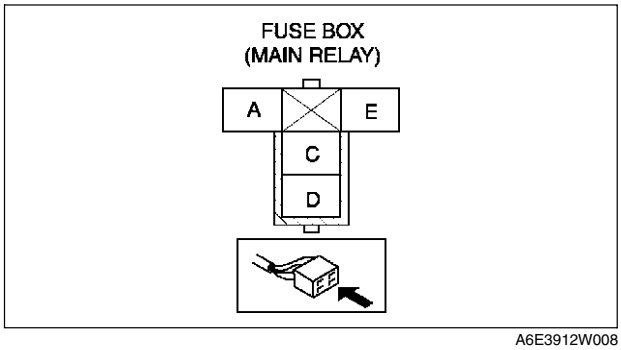

A6E3912W008

Open circuit
- If there is no continuity, the circuit is open. Repair or replace the harness.
  - — No.1 cylinder fuel injector terminal B (harness-side) and PCM terminal 4Z.
  - — No.2 cylinder fuel injector terminal B (harness-side) and PCM terminal 4W.
  - — No.3 cylinder fuel injector terminal B (harness-side) and PCM terminal 4AD.
  - — No.4 cylinder fuel injector terminal B (harness-side) and PCM terminal 4AA.
  - — No.1 cylinder fuel injector terminal A (harness-side) and main relay (harness-side) terminal C through common connector.
  - — No.2 cylinder fuel injector terminal A (harness-side) and main relay (harness-side) terminal C through common connector.
  - — No.3 cylinder fuel injector terminal A (harness-side) and main relay (harness-side) terminal C through common connector.
  - — No.4 cylinder fuel injector terminal A (harness-side) and main relay (harness-side) terminal C through common connector.

Short circuit
- If there is continuity, the circuit is short. Repair or replace the harness.
  - — No.1 cylinder fuel injector terminal B (harness-side) and body GND.
  - — No.2 cylinder fuel injector terminal B (harness-side) and body GND.
  - — No.3 cylinder fuel injector terminal B (harness-side) and body GND.
  - — No.4 cylinder fuel injector terminal B (harness-side) and body GND.
  - — No.1 cylinder fuel injector terminal A (harness-side) and power supply.

— No.2 cylinder fuel injector terminal A (harness-side) and power supply.
— No.3 cylinder fuel injector terminal A (harness-side) and power supply.
— No.4 cylinder fuel injector terminal A (harness-side) and power supply.

Fuel Leakage Inspection

Warning
- **Fuel line spills and leakage are dangerous. Fuel can ignite and cause serious injuries or death and damage. Always carry out the following procedure with the engine stopped.**

Note
- Perform the following test only when directed.

1. Complete the “BEFORE REPAIR PROCEDURE”. (See F–17 BEFORE REPAIR PROCEDURE.)
2. Disconnect the negative battery cable.
3. Remove the fuel injectors together with the fuel distributor with the fuel hose connected. (See F–28 FUEL INJECTOR REMOVAL/INSTALLATION.)
4. Fasten the fuel injectors firmly to the fuel distributor with wire.
5. Connect the negative battery cable.

Caution
- **Connecting the wrong check connector terminal may possibly cause malfunction. Carefully connect the specified terminal only.**

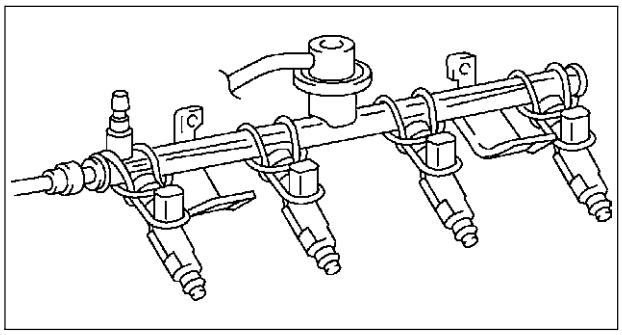
A6E3912W009

6. Short the check connector terminal F/P to body GND using a jumper wire.
7. Turn the ignition switch to ON position to operate the fuel pump.

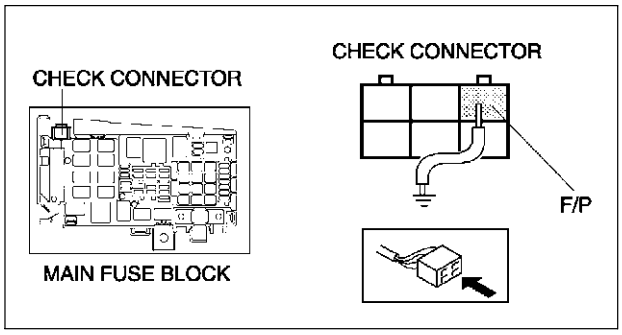

A6E3912W037

8. Tilt the fuel injectors **approx. 60 degrees.**
9. Verify that fuel leakage from the fuel injector nozzles is within the specification.
   - If not as specified, replace the fuel injector.

Fuel leakage
Less than 1 drop/2 minutes

10. Turn the ignition switch to LOCK position and remove the jumper wire.
11. Complete the “AFTER REPAIR PROCEDURE”. (See F–17 AFTER REPAIR PROCEDURE.)

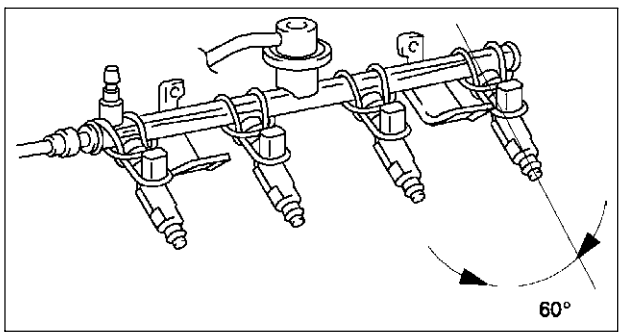

A6E3912W010

Volume Inspection

Warning

- **Fuel line spills and leakage are dangerous. Fuel can ignite and cause serious injuries or death and damage. Always carry out the following procedure with the engine stopped.**

Note

- If there is an after market fuel injector tester, perform the following test.
- If there is no an after market fuel injector tester, perform “Operation Test”, “Resistance Inspection”, and “Fuel Leakage Test” to verify the fuel injector is okay or not.

1. Complete the “BEFORE REPAIR PROCEDURE”. (See F–17 BEFORE REPAIR PROCEDURE.)
2. Disconnect the negative battery cable.
3. Remove the fuel injectors. (See F–28 FUEL INJECTOR REMOVAL/INSTALLATION.)
4. Connect the fuel injector to the fuel injector tester.
5. Measure the injection volume of each fuel injector using a graduated container.
   - If not as specified, replace the fuel injector.

Injection volume

L3: 61—71 ml {61—79 cc, 2.2—2.7 fl oz}/15 sec.
LF: 53—69 ml {53—69 cc, 1.9—2.4 fl oz}/15 sec.
L8: 48—63 ml {48—63 cc, 1.7—2.2 fl oz}/15 sec.

6. Turn the ignition switch to LOCK position and disconnect the jumper wire.
7. Complete the “AFTER REPAIR PROCEDURE”. (See F–17 AFTER REPAIR PROCEDURE.)

Atomization

1. Inspect atomization pattern.
   - If the atomization is faulty, replace the fuel injector.

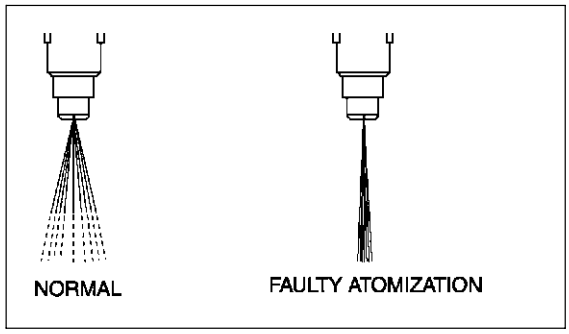

A6E3912W011

PRESSURE REGULATOR INSPECTION

A6E391213280W01

Note
- Due to the adoption of the mechanical returnless fuel system, the pressure regulator cannot be inspected separately.

1. Perform “FUEL LINE PRESSURE INSPECTION”. (See F–20 FUEL LINE PRESSURE INSPECTION.)

PULSATION DAMPER REMOVAL/INSTALLATION

A6E391220180W01

1. Remove and install the pressure regulator.(See F–28 FUEL INJECTOR REMOVAL/INSTALLATION.)

PULSATION DAMPER INSPECTION

A6E391220180W02

1. Complete the “BEFORE REPAIR PROCEDURE”. (See F–17 BEFORE REPAIR PROCEDURE.)
2. Remove the pulsation damper. (See F–34 PULSATION DAMPER REMOVAL/INSTALLATION.)
3. Visually inspect the pulsation damper for damage and cracks. Also verify that there is no extreme rust which will cause fuel leakage.
   - If either is observed, replace the pulsation damper.
4. Complete the “AFTER REPAIR PROCEDURE”. (See F–17 AFTER REPAIR PROCEDURE.)

EXHAUST SYSTEM

EXHAUST SYSTEM INSPECTION

A6E391440000W01

1. Start the engine and inspect each exhaust system component for exhaust gas leakage.
   - If leakage is found, repair or replace as necessary.

EXHAUST SYSTEM REMOVAL/INSTALLATION

A6E391440000W02

Warning

- **When the engine and exhaust system are hot, they can badly burn. Turn off the engine and wait until they are cool before removing the exhaust system.**

1. Disconnect the negative battery cable.
2. Remove in the order indicated in the table.
3. Install in the reverse order of removal.

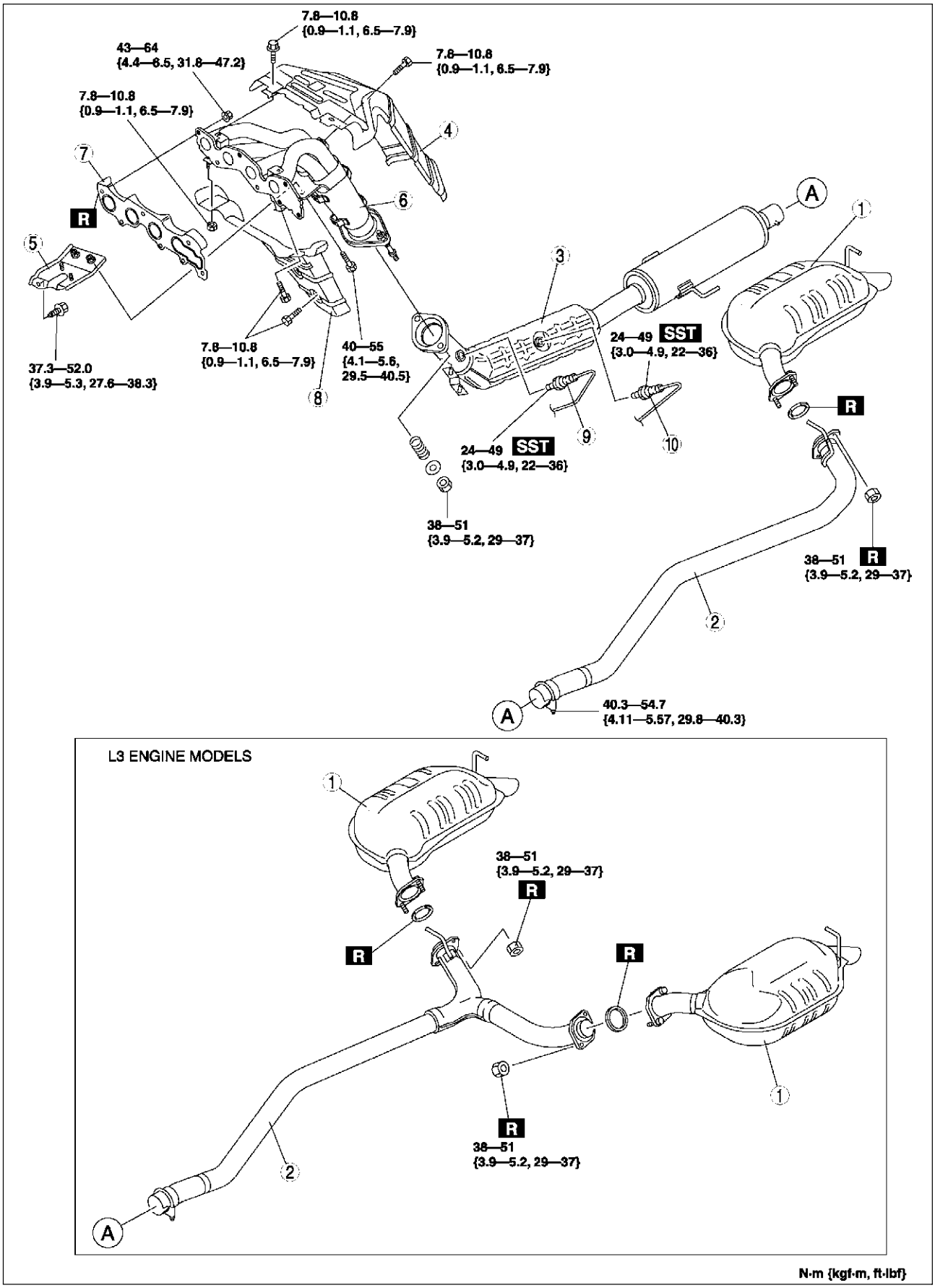

A6E3914W002

1	Main silencer
2	Middle pipe
3	TWC
4	Exhaust manifold insulator (upper)
5	Bracket
6	Exhaust manifold (See F–37 Exhaust Manifold Installation Note)
7	Exhaust manifold gasket
8	Exhaust manifold insulator (lower)
9	HO2S (front) (See F–37 HO2S Removal Note)
10	HO2S (rear) (See F–37 HO2S Removal Note)

HO2S Removal Note

1. Remove the HO2S using the **SST** before removing the exhaust manifold.

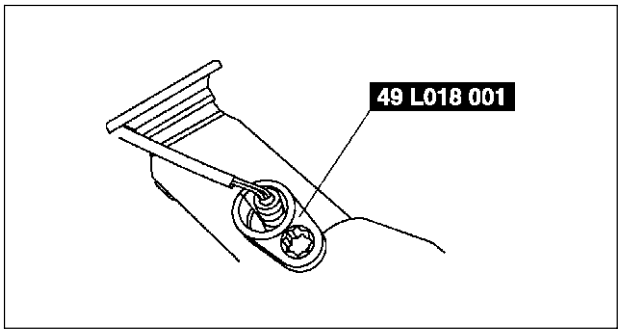

A6J3914W004

Exhaust Manifold Installation Note

1. Tighten the exhaust manifold installation nuts in the order shown.

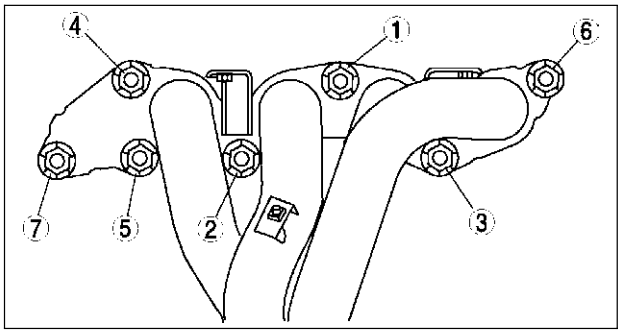

A6E3914W003

F

EMISSION SYSTEM

CHARCOAL CANISTER INSPECTION

A6E391613970W01

1. Remove the charcoal canister.
2. Plug the atmosphere side port and purge solenoid valve side port of the charcoal canister.
3. Blow air into the charcoal canister from the fuel tank side port and verify that there is no air leakage.
   - If there is air leakage, replace the charcoal canister.

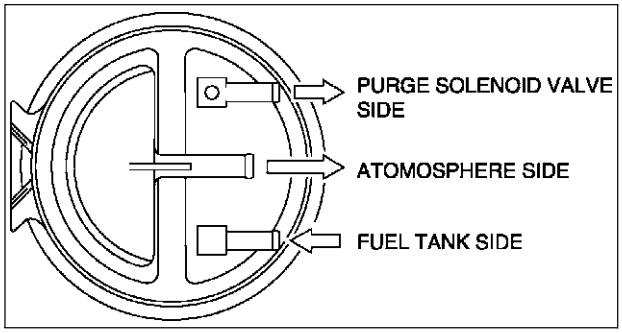

A6E3916W002

EVAPORATIVE GAS CHECK VALVE (ONE-WAY) INSPECTION (L.H.D.)

A6E391613988W01

1. Remove the evaporative gas check valve (one-way).
2. Apply pressure to port A, and verify that there is no airflow.
   - If there is airflow, replace the evaporative gas check valve (one-way).
3. Apply negative pressure to port A, and verify that there is air flow.
   - If there is no airflow, replace the evaporative gas check valve (one-way).

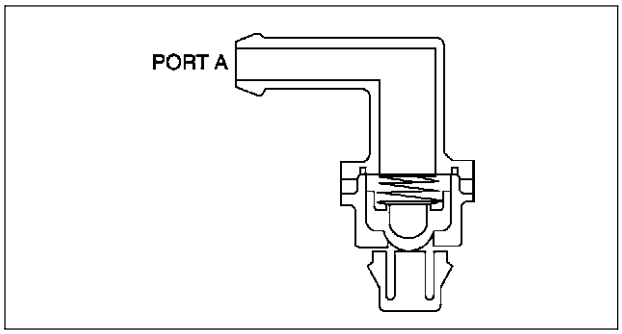

A6E3916W001

PURGE SOLENOID VALVE REMOVAL/INSTALLATION

A6E391618740W01

1. Disconnect the negative battery cable.
2. Remove in the order indicated in the table.

1	Evaporative hose (to charcoal canister) (See F–38 Evaporative Hose Installation Note)
2	Vacuum hose (to intake manifold) (See F–38 Vacuum Hose Installation Note)
3	Purge solenoid valve

3. Install in the reverse order of removal.

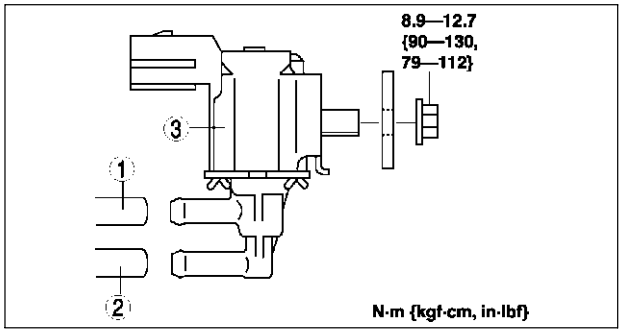

A6E3916W024

Vacuum Hose Installation Note

1. Attach the vacuum hose onto the purge solenoid valve until it contacts the stopper.

Evaporative Hose Installation Note

1. Attach the evaporative hose onto the purge solenoid valve until it contacts the stopper.

PURGE SOLENOID VALVE INSPECTION

A6E391618740W02

Airflow Inspection

Note
- Perform the following test only when directed.

1. Disconnect the negative battery cable.
2. Remove the purge solenoid valve. (See F–38 PURGE SOLENOID VALVE REMOVAL/INSTALLATION.)
3. Inspect airflow between the ports under the following conditions.
   - If not as specified, replace the purge solenoid valve.
   - If as specified, carry out the “Circuit Open/Short Inspection”.

○—○ : Continuity ○═○ : Airflow

Step	Terminal		Port	
	A	B	A	B
1	○—○			
2	B+	GND	○═○	

A6E3916W004

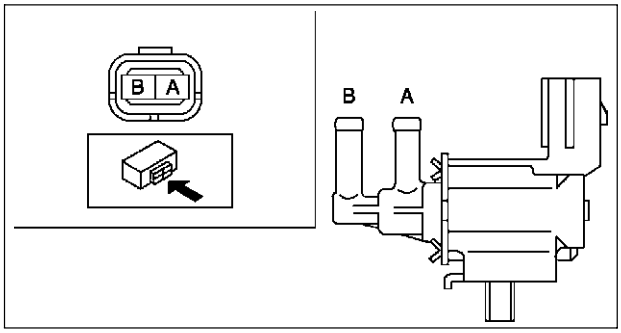

A6E3916W005

Circuit Open/Short Inspection

1. Disconnect the PCM connector. (See F–43 PCM REMOVAL/INSTALLATION.)
2. Inspect the following wiring harness for open or short (continuity check).

Open circuit
- If there is no continuity, the circuit is open. Repair or replace the harness.
  - — Purge solenoid valve terminal A (harness-side) and PCM terminal 4U
  - — Purge solenoid valve terminal B (harness-side) and main relay terminal C (harness-side)

Short circuit
- If there is continuity, the circuit is shorted. Repair or replace the harness.
  - — Purge solenoid valve terminal A (harness-side) and body GND
  - — Purge solenoid valve terminal B (harness-side) and power supply

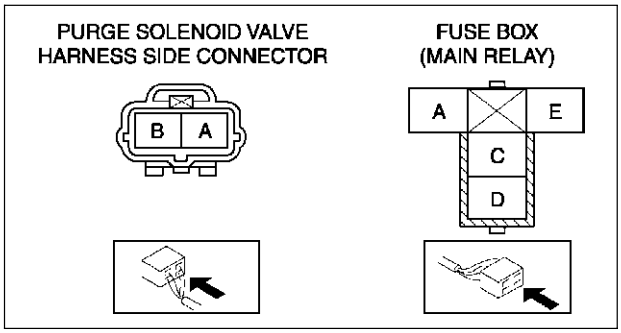

A6E3916W006

EGR VALVE REMOVAL/INSTALLATION

A6E391620300W01

1. Disconnect the negative battery cable.
2. Disconnect the EGR valve connector.
3. Remove in the order indicated in the table.

1	Water hose (See F–39 Water Hose Removal Note)
2	EGR valve (See F–39 EGR Valve Removal Note)

4. Install in the reverse order of removal.

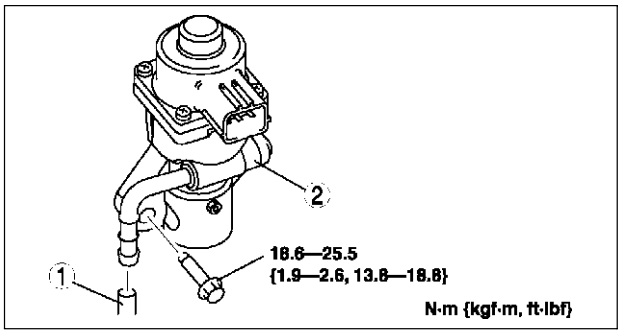

A6E3916W008

Water Hose Removal Note

- Drain the engine coolant. (See E–3 ENGINE COOLANT REPLACEMENT.)

EGR Valve Removal Note

1. Remove the air hose. (See F–10 INTAKE-AIR SYSTEM REMOVAL/INSTALLATION)
2. Remove the upper radiator hose. (See E–6 RADIATOR REMOVAL/INSTALLATION.)

EGR VALVE INSPECTION

A6E391620300W02

Operation Test

1. Carry out the “EGR Control Inspection”. (See F–233 EGR Control System Inspection.
   - If not as specified, perform the further inspection for the EGR valve.

Resistance Inspection

Note
- Perform the following test only when directed.

1. Disconnect the negative battery cable.
2. Inspect resistance of the EGR valve coils.
   - If not as specified, replace the EGR valve.
   - If as specified, carry out the “Circuit Open/ Short Inspection”.

Terminals	Resistance (ohms)
C—E C—A D—B D—F	12—16

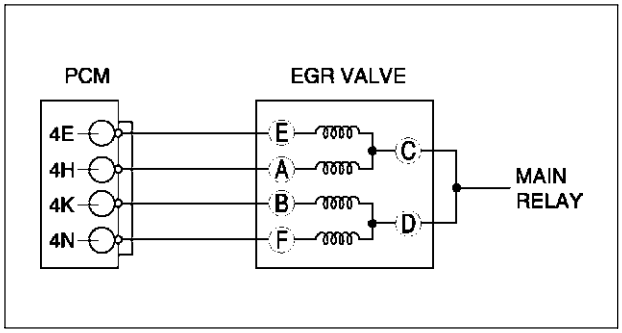

A6E3916W009

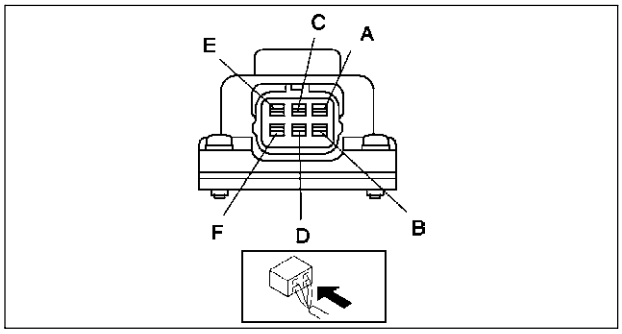

A6E3916W011

Circuit Open/Short Inspection

1. Disconnect the PCM connector. (See F–43 PCM REMOVAL/INSTALLATION.)
2. Inspect the following wiring harness for open or short (continuity check).

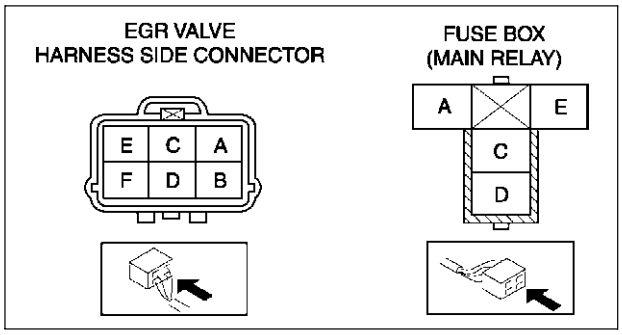

A6E3916W010

Open circuit
- If there is no continuity, the circuit is open. Repair or replace the harness.
  - — EGR valve terminal E (harness-side) and PCM terminal 4E
  - — EGR valve terminal A (harness-side) and PCM terminal 4H
  - — EGR valve terminal B (harness-side) and PCM terminal 4K
  - — EGR valve terminal F (harness-side) and PCM terminal 4N
  - — EGR valve terminal C or D (harness-side) and main relay terminal C (harness-side)

Short circuit
- If there is continuity, the circuit is shorted. Repair or replace the harness.
  - — EGR valve terminal E (harness-side) and GND
  - — EGR valve terminal A (harness-side) and GND
  - — EGR valve terminal B (harness-side) and GND
  - — EGR valve terminal F (harness-side) and GND
  - — EGR valve terminal C or D (harness-side) and power supply

3. Remove the EGR valve, and inspect for any damage or clogging.
   - If there is no damage or no clogging, replace the EGR valve.

PCV VALVE INSPECTION

A6E391613890W01

1. Disconnect the negative battery cable.
2. Remove the intake maniforld.(see F–10 INTAKE-AIR SYSTEM REMOVAL/INSTALLATION.)
3. Remove the PCV valve.
4. Blow through the valve and verify that air flows as specified.
   - If not as specified, replace the PCV valve.

Specification

Condition	Airflow
Air applied from port A to B	Yes
Air applied from port B to A	No

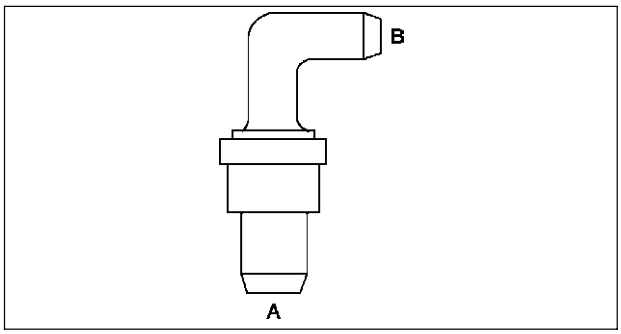

A6E3916W007

F

THREE-WAY CATALYTIC CONVERTER (TWC) INSPECTION

A6E391620500W01

Note
- Make sure that no HO2S DTCs have been detected. If detected, this inspection is not applicable for TWC inspection.

1. Connect the WDS or equivalent and monitor PIDs as following.
   - Monitor the right TWC using O2S11 PID for upstream HO2S and O2S12 PID for downstream HO2S.
2. Begin to monitor the appropriate PIDs.
3. Drive the vehicle for **10 min** at **65—96 km/h {40—60 mph}** to allow the front catalytic converter to reach operating temperature.
4. Stop the vehicle and leave it in a safe place.
5. Let the engine idle.
6. Record PIDs for **1 min**.
7. Select the appropriate PIDs and read the graph.
8. Count the number of times (inversions) that the upstream HO2S graph line actually crosses the **0.5 V** line.
9. Count the number of times (inversions) that the downstream HO2S graph line actually crosses the **0.5 V** line.

Note
- Do not count the number of peaks. Refer to the graph.

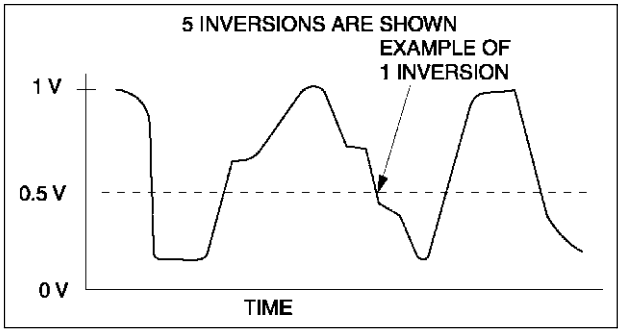

A6E3916W013

10. Using the following equation, calculate the value of ratio.

Equation
RATIO = Upstream HO2S inversion ÷ downstream HO2S inversion

- If the ratio is **5.5** or more or there is no downstream HO2S inversion, the TWC is functioning properly.
- If the ratio is **less than 1.125**, the TWC is not functioning properly. Replace the TWC.

Upstream HO2S graph line example

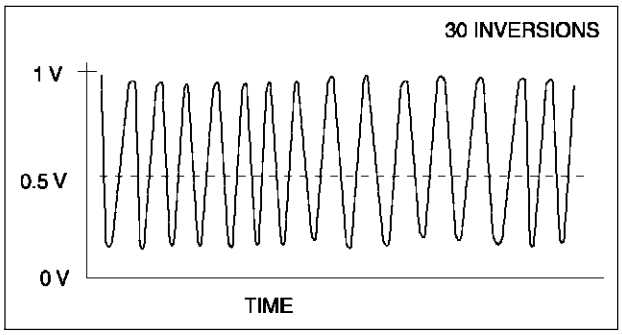

A6E3916W021

Downstream HO2S graph line example 1

Equation
RATIO = 30 inversions (upstream HO2S inversions) ÷ 5 inversions (downstream HO2S inversions) = 6.0 (good WU-TWC)

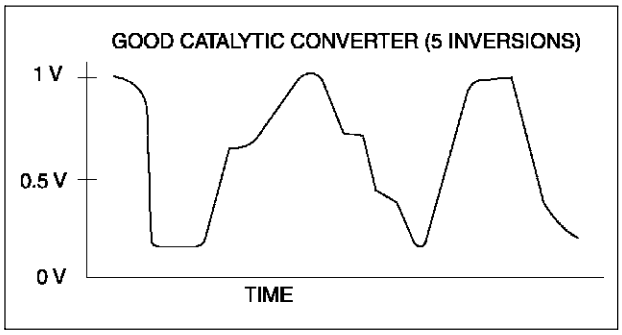

A6E3916W012

Downstream HO2S graph line example 2

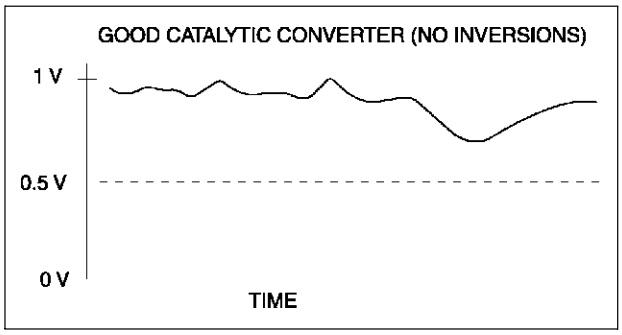

A6E3916W014

Downstream HO2S graph line example 3

Equation
RATIO = 30 inversions (upstream HO2S inversions) ÷ 27 inversions (downstream HO2S inversions) = 1.1 (bad converter)

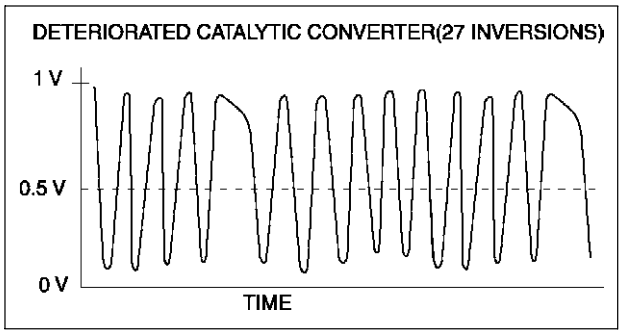

A6E3916W015

CONTROL SYSTEM

PCM REMOVAL/INSTALLATION

A6E394018880W01

Note

- For replace the PCM, Setup the WDS and perform the PCM configuration. (See F–50 PCM CONFIGURATION.)

1. Disconnect the negative battery cable.
2. For R.H.D, perform the following procedures.
   (1) Remove the front side trim (left-side).
   (2) Partially peel back the flower covering.
3. Remove in the order indicated in the table.
4. Install in the reverse order of removal.

U.K. specs.

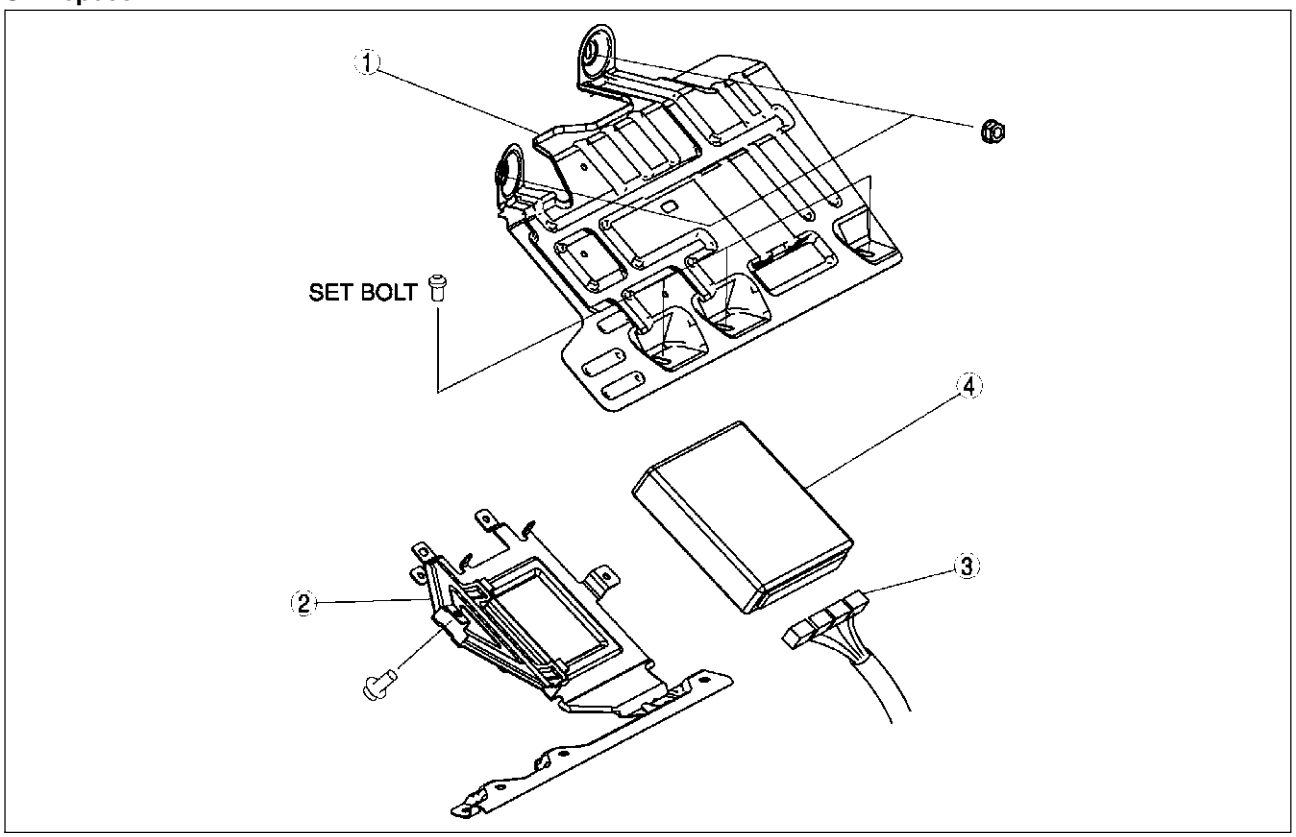

A6E3940W002

1	PCM cover No. 1 (See F–44 Set Nut/bolt Removal Note) (See F–44 Set Nut/bolt Installation Note)

2	PCM cover No. 2
3	PCM connector
4	PCM

European (L.H.D.) specs.

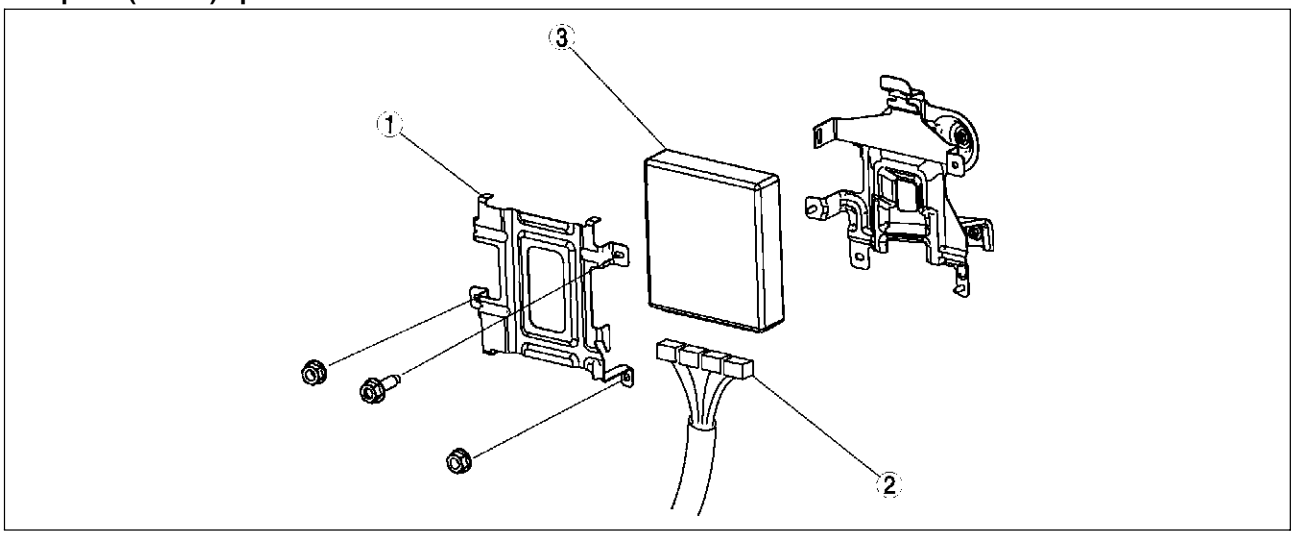

A6E3940W001

1	PCM cover
2	PCM connector

3	PCM

Set Nut/bolt Removal Note

1. Using a chisel and a hammer, cut a groove on the head of the set nut/bolt so that a screwdriver can be inserted.
2. Loose the set nut/bolt using an impact screwdriver or pliers.

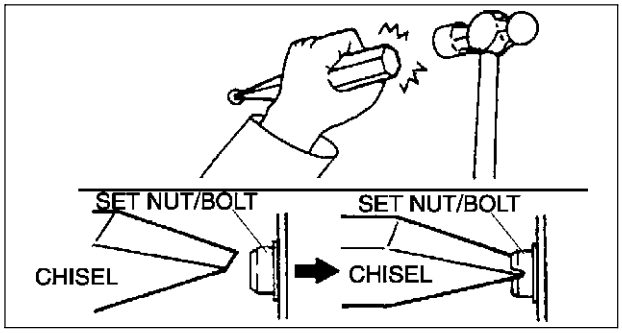

A6E3940W003

Set Nut/bolt Installation Note

1. Install a new set nut/bolt and tighten it until the neck of the nut/bolt is cut.

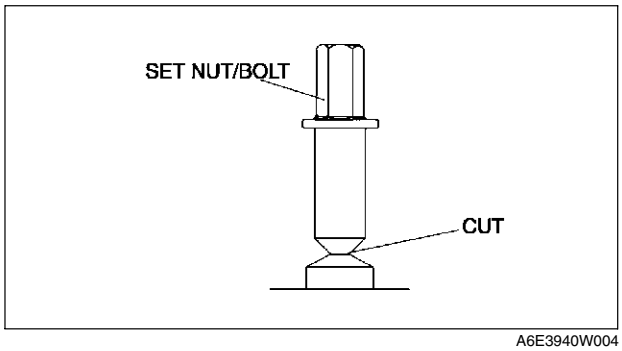

A6E3940W004

PCM INSPECTION

A6E394018880W02

Note
- PIDs for the following parts are not available on this model. Go to the appropriate part inspection page.
  — CMP sensor (See F–55 CAMSHAFT POSITION (CMP) SENSOR INSPECTION.)
  — Main relay (See T–24 RELAY INSPECTION.)

1. Connect the **SST** (WDS or equivalent) to the DLC-2.
2. Turn the ignition switch to ON position.
3. Measure the PID value.
   - If PID value is not within the specification, follow the instructions in Action column.

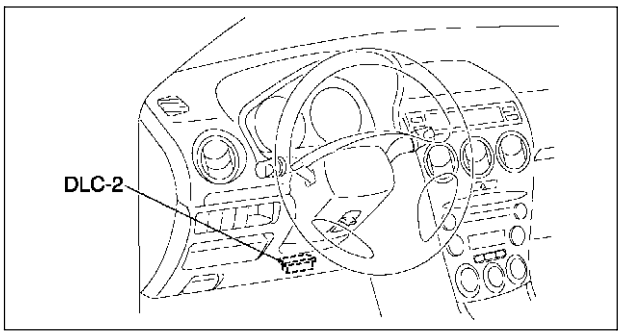

A6E3970W002

Note
- The PID/DATA MONITOR function monitors the calculated value of the input/output signals in the PCM. Therefore, an output device malfunction is not directly indicated as a malfunction of the monitored value for the output device. If a monitored value of an output device is out of specification, inspect the monitored value of the input device related to the output control.
- For input/output signals except those of the monitoring items, use a voltmeter to measure the PCM terminal voltage.
- The simulation items that are used in the ENGINE CONTROL SYSTEM OPERATION INSPECTION are as follows.
  — ACCS
  — ALTF
  — EVAPCP
  — FAN1
  — FAN2
  — FAN3
  — FP
  — HTR11
  — HTR12
  — IAC
  — IASV
  — IMRC
  — IMTV
  — VT DUTY1

PID/DATA monitor table (reference)

Monitor item (Definition)	Unit/ Condition	Condition/Specification (Reference)	Action	PCM terminal
ACCS (A/C relay)	ON/OFF	Ignition switch ON: OFF A/C switch ON and fan switch ON at idle: ON	Inspect following PIDs: RPM, TP, ECT, ACSW, TR. Inspect A/C relay. (See U–47 CLIMATE CONTROL UNIT INSPECTION)	4O
ACSW (A/C switch)	ON/OFF	A/C switch and fan switch ON at ignition switch ON: OFF A/C switch OFF at ignition switch ON: OFF	Inspect A/C switch. (See U–47 CLIMATE CONTROL UNIT INSPECTION)	1AC
ALTF (Generator field coil control duty value)	%	Ignition switch ON: 0% Idle: 0—100% Just after A/C switch ON and fan switch ON at idle: Duty value rises	Inspect following PIDs: IAT, ECT, RPM, VPWR, ALTT V. Inspect generator. (See G–7 GENERATOR INSPECTION)	1AD
ALTT V (Generator output voltage)	V	Ignition switch ON: 0 V Idle: Approx. 14.9 V[*1] (E/L not operating)	Inspect generator. (See G–7 GENERATOR INSPECTION)	1AA

Monitor item (Definition)	Unit/ Condition	Condition/Specification (Reference)	Action	PCM terminal
ARPMDES (Target engine speed)	RPM	**L8** No load: 700 rpm E/L operating: 700 rpm P/S operating: 750 rpm A/C ON: 750 rpm **LF MTX and L3 MTX** No load: 650 rpm E/L operating: 700 rpm P/S operating: 700 rpm A/C ON: 750 rpm **LF ATX** No load: 700 rpm E/L operating: 700 rpm P/S operating: 700 rpm A/C ON: 700 rpm*2, 750 rpm*3	Inspect following PIDs: IAT, RPM, MAP, ECT, MAF, TP, INGEAR, ACSW, TR, PSP, ALTT V. Inspect IAC valve. (See F–13 IDLE AIR CONTROL (IAC) VALVE INSPECTION) Inspect CKP sensor. (See F–54 CRANKSHAFT POSITION (CKP) SENSOR INSPECTION)	—
AST (After start timer)	Time	—	—	—
BARO (Barometric pressure)	Pressure	Ignition switch ON (at sea level): approx 101 kPa	Inspect BARO sensor. (See F–60 BAROMETRIC PRESSURE (BARO) SENSOR INSPECTION)	1G
	V	Ignition switch ON (at sea level): approx 4.1 V		
BOO (Brake switch)	ON/OFF	Brake pedal depressed: ON Brake pedal released: OFF	Inspect brake switch. (See P–8 BRAKE SWITCH INSPECTION)	1K
CHRGLMP (Generator warning light)	ON/OFF	Ignition switch ON: ON Idle: OFF	Perform applicable DTC troubleshooting. (See F–67 DTC TABLE)	—
COLP (Refrigerant pressure switch (middle))*4	ON/OFF	Refrigerant pressure switch (middle) ON *2 at idle: ON Refrigerant pressure switch (middle) OFF*3 at idle: OFF	Inspect refrigerant pressure switch. (See U–43 REFRIGERANT PRESSURE SWITCH INSPECTION)	1Q
CPP (Clutch pedal position)	ON/OFF	Clutch pedal depressed: ON Clutch pedal released: OFF	Inspect clutch switch. (See F–59 CLUTCH SWITCH INSPECTION)	1R
CPP/PNP (Shift lever position)	ON/OFF	Neutral position: ON Others: OFF	Inspect neutral switch. (See F–59 NEUTRAL SWITCH INSPECTION)	1W
DTCCNT (Number of DTC detected)	—	—	Perform applicable DTC troubleshooting. (See F–67 DTC TABLE)	—
ECT (Engine coolant temperature)	°C / °F	ECT 20 °C {68 °F}: 20 °C {68 °F} ECT 60 °C {140 °F}: 60 °C {140 °F}	Inspect ECT sensor. (See F–53 ENGINE COOLANT TEMPERATURE (ECT) SENSOR INSPECTION)	1M
	V	ECT 20 °C {68 °F}: 3.04—3.14 V ECT 60 °C {140 °F}: 1.29—1.39 V		
EVAPCP (Purge solenoid valve duty value)	%	Ignition switch ON: 0% Idle: 0%	Inspect following PIDs: IAT, RPM, ECT, MAF, O2S11,BARO, INGEAR, TR, VPWR. (See F–39 PURGE SOLENOID VALVE INSPECTION)	4U
FAN1 (Cooling fan control)	ON/OFF	ECT below 100 °C {212 °F}: OFF Others: ON	Inspect following PIDs: RPM, TP, ECT, ACSW, COLP, TEST. Inspect cooling fan relay. (See T–24 RELAY INSPECTION)	4L
FAN2 (Cooling fan control)	ON/OFF	ECT below 108 °C {226 °F}: OFF A/C operating, refrigerant pressure switch (middle) is OFF, and ECT below 108 °C {226 °F}: OFF Others: ON	Inspect following PIDs: RPM, TP, ECT, ACSW, COLP, TEST. Inspect cooling fan relay. (See T–24 RELAY INSPECTION)	4F
FAN3 (Cooling fan control)	ON/OFF	ECT below 100 °C {212 °F}: OFF A/C operating, refrigerant pressure switch (middle) is ON, and ECT below 108 °C {226 °F}: OFF Other: ON	Inspect following PIDs: RPM, TP, ECT, ACSW, COLP, TEST. Inspect cooling fan relay. (See T–24 RELAY INSPECTION)	4B

Monitor item (Definition)	Unit/ Condition	Condition/Specification (Reference)	Action	PCM terminal
FDPDTC (Pending code caused FFD storage)	—	—	Perform applicable DTC troubleshooting. (See F–67 DTC TABLE)	—
FP (Fuel pump relay)	ON/OFF	Ignition switch ON: OFF Idle: ON Cranking: ON	Inspect following PIDs: RPM. Inspect fuel pump relay. (See T–24 RELAY INSPECTION)	4P*5 4Q*6
FUELPW (Fuel injector duration)	TIME	Ignition switch ON: 0 ms Idle (after warm up): approx. 2.5 ms	Inspect following PIDs: IAT, MAF, TP, MAP, ECT, RPM, O2S11, O2S12, INGEAR, TR, PSP, ACSW, VPWR, ALTT V. Inspect fuel injector. (See T–24 RELAY INSPECTION)	4W, 4Z, 4AA, 4AD
FUELSYS (Fuel system status)	Open loop/ Closed loop	Ignition switch ON: Open loop Idle (after warm up): Closed loop	Inspect following PIDs: IAT, MAF, TP, MAP, ECT, RPM, O2S11, O2S12, INGEAR, TR, PSP, ACSW, VPWR, ALTT V. Inspect fuel injector. (See T–24 RELAY INSPECTION)	—
GENVDSD (Generator voltage desired)	V	Ignition switch ON: 0 V Idle: Approx. 14.9 V*1 (E/L not operating)	Perform applicable DTC troubleshooting. (See F–67 DTC TABLE)	—
HTR11 (HO2S heater (front))	ON/OFF	Idle (after warm up): ON⇔OFF	Inspect following PIDs: IAT, MAF, TP, ECT, RPM, ACSW. (See F–56 HEATED OXYGEN SENSOR (HO2S) INSPECTION)	4A
HTR12 (HO2S heater (rear))	ON/OFF	Ignition switch ON: OFF (HO2S heater not operating) Idle: ON (HO2S heater operating)	Inspect following PIDs: IAT, MAF, ECT, RPM, ACSW. (See F–56 HEATED OXYGEN SENSOR (HO2S) INSPECTION)	4D
IAC (IAC valve)	%	Ignition switch ON: 0% Idle: Approx. 60% (ECT 90°C {194 °F} and E/L not operating)	Inspect following PIDs: IAT, RPM, MAP, ECT, MAF, TP, INGEAR, TR, PSP, ACSW. Inspect IAC valve. (See F–13 IDLE AIR CONTROL (IAC) VALVE INSPECTION)	4G 4J
IASV (Variable air duct control solenoid valve)	ON/OFF	ECT is above 70 °C {158 °F}, engine speed is above 5,800 rpm, and TP opening angle is above 50%: ON Others: OFF	Inspect following PIDs: ECT, RPM, TP. Inspect VAD control solenoid valve. (See F–13 VARIABLE AIR DUCT (VAD) CONTROL SOLENOID VALVE INSPECTION (L3)	4C
IAT (Intake air temperature)	°C / °F	IAT 20 °C {68 °F}: 20 °C {68 °F} IAT 30 °C {86 °F}: 30 °C {86 °F}	Inspect IAT sensor. (See F–50 INTAKE AIR TEMPERATURE (IAT) SENSOR INSPECTION)	2E
	V	IAT 20 °C {68 °F}: 2.4—2.6 V IAT 30 °C {86 °F}: 1.7—1.9 V		
IMRC (Variable tumble control solenoid valve)	ON/OFF	Engine speed is below approx. 3,750 rpm: ON Others: OFF	Inspect following PIDs: TP, ECT, RPM. Inspect VTCS solenoid valve. (See F–15 VARIABLE TUMBLE CONTROL SOLENOID VALVE INSPECTION)	4T
IMTV (Variable Intake-air control solenoid valve)	ON/OFF	Engine speed is below approx. 4,500 rpm: ON Others: OFF	Inspect following PIDs: RPM. Inspect VIS control solenoid valve. (See F–14 VARIABLE INTAKE-AIR SYSTEM (VIS) CONTROL SOLENOID VALVE INSPECTION (L3))	4R
INGEAR (Load/no load condition)	ON/OFF	CPP or CPP/PNP is ON: OFF Others: ON	Perform applicable DTC troubleshooting. (See F–67 DTC TABLE)	1R, 1W
IVS (CTP condition)	ON/OFF	CTP: ON Others: OFF	Perform applicable DTC troubleshooting. (See F–67 DTC TABLE)	2A

Monitor item (Definition)	Unit/ Condition	Condition/Specification (Reference)	Action	PCM terminal
KNOCKR (Knocking retard)	ANGLE	Ignition switch ON: 0 DEG Idle: 0 DEG	Inspect knock sensor. (See F–56 KNOCK SENSOR INSPECTION)	2P, 2S
LOAD (Engine load)	%	Ignition switch ON: 0% Idle (after warm up): approx.19%	Inspect MAF sensor. (See F–51 MASS AIR FLOW (MAF) SENSOR INSPECTION)	—
LONGFT1 (long term fuel trim)	%	Idle (after warm up): approx.–14—14%	Perform applicable DTC troubleshooting. (See F–67 DTC TABLE)	—
MAF (Mass airflow)	g/s	Ignition switch ON: approx. 0 g/s Idle (after warm up): 1.5 g/s	Inspect MAF sensor. (See F–51 MASS AIR FLOW (MAF) SENSOR INSPECTION	1P
	V	Ignition switch ON: approx. 0.7 V Idle (after warm up): 1.3 V		
MAP (Manifold absolute pressure)	Pressure	Ignition switch ON (at sea level): approx 101 kPa	Inspect MAP sensor. (See F–52 MANIFOLD ABSOLUTE PRESSURE (MAP) SENSOR INSPECTION)	1J
	V	Ignition switch ON (at sea level): approx 4.1 V		
MIL (Malfunction indicator lamp)	ON/OFF	Ignition switch ON: ON Idle: OFF	Perform applicable DTC troubleshooting. (See F–67 DTC TABLE)	—
MIL_DIS (Trabelled distance since the MIL illuminated)	Distance	No DTC: 0 km {0 mph} DTC detected: Not 0 km {0 mph}	Perform applicable DTC troubleshooting. (See F–67 DTC TABLE)	—
O2S11 (Front oxygen sensor)	V	Ignition switch ON: 0—1.0 V Idle (After warm up): 0—1.0 V Acceleration (After warm up): 0.5—1.0 V Deceleration (After warm up): 0—0.5 V	Inspect HO2S (front). (See F–56 HEATED OXYGEN SENSOR (HO2S) INSPECTION)	1AB
O2S12 (Rear oxygen sensor)	V	Idle (After warm up): approx 0.6 V	Inspect HO2S (rear). (See F–56 HEATED OXYGEN SENSOR (HO2S) INSPECTION)	1Y
PSP (Power steering pressure switch)	ON/OFF	Steering wheel in straight ahead position: OFF Others: ON	Inspect PSP switch. (See F–58 POWER STEERING PRESSURE (PSP) SWITCH INSPECTION)	1Z
RFCFLAG (Readness function code)	ON/OFF	Before running PCM adaptive memory procedure drive mode: ON After running PCM adaptive memory procedure drive mode: OFF	Run PCM adaptive memory procedure drive mode. (See F–67 DTC TABLE)	—
RO2FT1 (Rear oxygen sensor fuel trim)	%	Idle (after warm up): approx.–14—14%	Perform applicable DTC troubleshooting. (See F–67 DTC TABLE)	—
RPM (Engine speed)	rpm	**L8** No load: 650—750 rpm E/L operating: 650—750 rpm P/S operating: 700—800 rpm A/C ON: 700—800 rpm **LF MTX and L3 MTX** No load: 600—700 rpm E/L operating: 650—750 rpm P/S operating: 650—750 rpm A/C ON: 700—800 rpm **LF ATX** No load: 650—750 rpm E/L operating: 650—750 rpm P/S operating: 650—750 rpm A/C ON: 650—750 rpm*2, 700—800 rpm*3	Inspect CKP sensor. (See F–54 CRANKSHAFT POSITION (CKP) SENSOR INSPECTION)	2D, 2G

Monitor item (Definition)	Unit/ Condition	Condition/Specification (Reference)	Action	PCM terminal
SEGRP (EGR valve (stepping motor) position)	STP	Ignition switch ON: 0 step Idle: 0 step Cranking: 0—60 steps	Inspect following PIDs: MAF, TP, ECT, RPM, VSS. Inspect EGR valve. (See F–40 EGR VALVE INSPECTION)	4E 4H 4K 4N
SHRTFT1 (Short term fuel trim)	%	Idle (after warm up): approx.–30—25%	Perform applicable DTC troubleshooting. (See F–67 DTC TABLE)	—
SPARKADV (Ignition timing)	BTC	Ignition switch ON: BTDC 0° Idle: BTDC approx. 10°	Inspect following PIDs: MAF, TP, ECT, RPM, INGEAR, TR, PSP, ACSW, VPWR. Inspect ignition timing. (See F–8 IGNITION TIMING INSPECTION)	2J 2M
TEST (Test mode)	ON/OFF	—	—	—
TP (TP)	%	CTP: 13—23% WOT: 86—96%	Inspect TP sensor. (See F–51 THROTTLE POSITION (TP) SENSOR INSPECTION)	2A
	V	CTP: 0.65—1.15 V WOT: 4.3—4.8 V		
TPCT (TP sensor voltage at CTP)	V	0.65—1.15 V	Inspect TP sensor. (See F–51 THROTTLE POSITION (TP) SENSOR INSPECTION)	2A
VPWR (Battery positive voltage)	V	Ignition switch ON: B+	Inspect main relay. (See T–24 RELAY INSPECTION) Inspect battery. (See G–4 BATTERY INSPECTION)	2Y, 2Z
VSS (Vehicle speed)	km/h MPH	Vehicle speed 20 km/h {12 mph}: 20 km/h {12 mph} Vehicle speed 40 km/h {25 mph}: 20 km/h {12 mph}	Perform applicable DTC troubleshooting. (See F–67 DTC TABLE)	—
VT DUTY1	ANGLE	Idle: 0°	Inspect following PIDs: TP, ECT, RPM. Inspect OCV. (See B–33 OIL CONTROL VALVE (OCV) INSPECTION)	2I, 2L
	%	Idle: 0%		

*1 : Calculated value; differs from terminal voltage
*2 : Refrigerant pressure switch (middle) turns on when the refrigerant pressure is 1.69—1.84 MPa {17.3—18.7 kgf/cm2, 247—265 psi}
*3 : Refrigerant pressure switch (middle) turns off when the refrigerant pressure is 1.26—1.49 MPa {12.9—15.1 kgf/cm2, 184—214 psi}
*4 : L3 and L8, LF (Intensely hot area) models
*5 : Immobilizer system equipped
*6 : Immobilizer system not equipped

- Following PIDs are for the ATX models. If inspects for following PIDs, see K–110 PID/DATA MONITOR INSPECTION.
  PIDs for the ATX models
  — GEAR
  — LINEDES
  — LPS
  — OP_SW_B
  — SSA/SS1
  — SSB/SS2
  — SSC/SS3
  — TCS
  — TFT
  — TFTV
  — THOP
  — TR
  — TR_SENS
  — TSS

PCM CONFIGURATION

A6E394018880W03

1. Connect the WDS to DLC-2.
2. Set up the WDS (including the vehicle recognition.)
3. Select “Module programming.”
4. Select “Programmable module installation.”
5. Select “PCM” and perform procedures according to directions on the WDS screen.

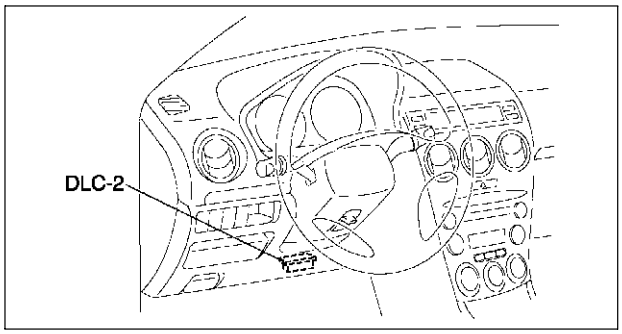

A6E3970W002

Note
- If “PCM CONFIGURATION” is successful, the PCM stores the DTC P0602 and illuminates the MIL. (System is normal.) Clear the DTC P0602 using WDS or equivalent after “PCM CONFIGURATION.”

Note
- MIL goes off after three drive cycles with no failure. (DTCs remain in PCM.)

6. Retrieve DTC’s by the WDS or equivalent, then verify that there in no DTC present.
   - If DTC is present, perform applicable DTC inspection.

INTAKE AIR TEMPERATURE (IAT) SENSOR INSPECTION

A6E394018845W01

Resistance Inspection

Note
- Perform the following inspection only when directed.

1. Disconnect MAF/IAT sensor.
2. Measure the resistance between the MAF/IAT sensor terminals D and E using an ohmmeter.
   - If not as specified, replace the MAF/IAT sensor.
   - If the MAF/IAT sensor is okay, but the IAT PID are out of specification, perform the “Circuit Open/Short Inspection”.

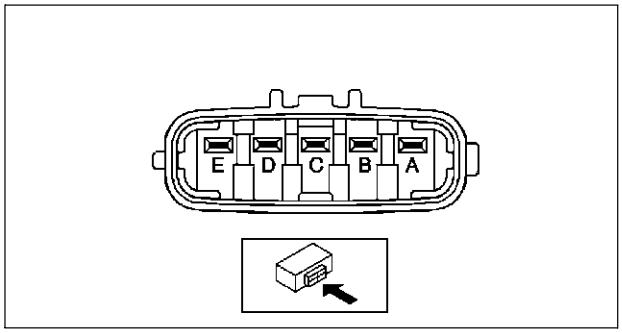

A6E3940W005

Specification

Ambient temperature (°C {°F})	Resistance (kilohm)
–20 {–4}	13.6—18.4
20 {68}	2.21—2.69
60 {140}	0.493—0.667

Circuit Open/Short Inspection

1. Disconnect the PCM connector. (See F–43 PCM REMOVAL/INSTALLATION.)
2. Inspect the following wiring harnesses for open or short. (Continuity check)

Open circuit
- If there is no continuity, the circuit is open. Repair or replace the harness.
  - — MAF/IAT sensor terminal D (harness-side) and PCM terminal 2E (harness-side)
  - — MAF/IAT sensor terminal E (harness-side) and PCM terminal 2H (harness-side)

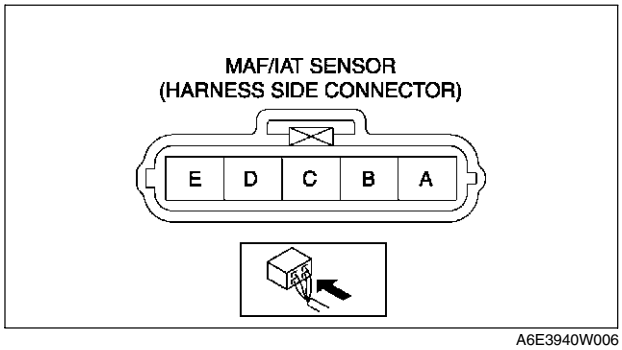

A6E3940W006

Short circuit
- If there is continuity, the circuit is shorted. Repair or replace the harness.
  - — MAF/IAT sensor terminal E (harness-side) and power supply
  - — MAF/IAT sensor terminal D (harness-side) and power supply
  - — MAF/IAT sensor terminal D (harness-side) and body GND

MASS AIR FLOW (MAF) SENSOR INSPECTION

A6E394013210W01

Voltage Inspection

Note
- Perform the following inspection only when directed.

1. Visually inspect for the following on the MAF sensor.
   - Damage
   - Cracks
   - Terminal bends
   - Terminal rust
     - — If any of the above are found, replace the MAF sensor.
     - — If the MAF PID value is out of specification, carry out the “Circuit Open/Short Inspection”.

Circuit Open/Short Inspection

1. Disconnect the PCM connector. (See F–43 PCM REMOVAL/INSTALLATION.)
2. Disconnect the MAF sensor connector.
3. Inspect the following wiring harnesses for open or short. (Continuity check)

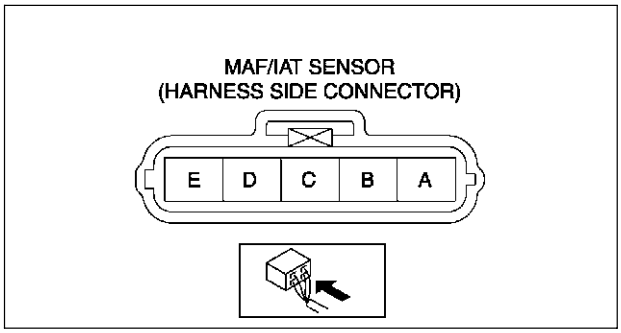

A6E3940W006

Open circuit
- If there is no continuity, the circuit is open. Repair or replace the harness.
  - — MAF sensor terminal A (harness-side) and main relay terminal C (harness-side)
  - — MAF sensor terminal B (harness-side) and PCM terminal 2AC (harness-side)
  - — MAF sensor terminal C (harness-side) and PCM terminal 1P (harness-side)

Short circuit
- If there is continuity, the circuit is shorted. Repair or replace the harness.
  - — MAF sensor terminal A (harness-side) and body GND
  - — MAF sensor terminal C (harness-side) and power supply
  - — MAF sensor terminal C (harness-side) and body GND
  - — MAF sensor terminal B (harness-side) and power supply

THROTTLE POSITION (TP) SENSOR INSPECTION

A6E394018910W01

Note
- Perform the following inspection only when directed.

Resistance Inspection

1. Perform the following test only when directed.
   - If as specified but TP PID value is out of specification, inspect resistance of TP sensor.
   - If not as specified, inspect the following:
     - — Accelerator cable free play (See F–16 ACCELERATOR CABLE INSPECTION/ADJUSTMENT.)
2. Disconnect the TP sensor connector.
3. Verify that the resistance between TP sensor terminals A and B changes smoothly while opened and closed the throttle valve slowly.
   - If not verified, replace TP sensor.
4. Measure the resistance between TP sensor terminals A and C using an ohmmeter.
   - If not as specified, replace the TP sensor.
   - If as specified, but TP PID value is out of specification, perform the “Circuit Open/Short Inspection”.

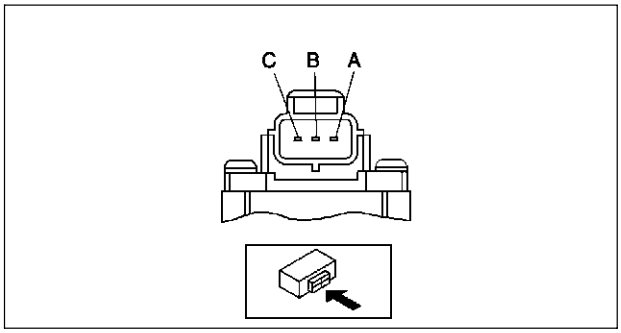

A6E3940W007

Specification
3.2—4.8 kilohms

Circuit Open/Short Inspection

1. Disconnect the PCM connector. (See F–43 PCM REMOVAL/INSTALLATION.)
2. Inspect the following wiring harnesses for open or short. (Continuity check)

Open circuit

- If there is no continuity, the circuit is open. Repair or replace the harness.
  - — TP sensor terminal A (harness-side) and PCM terminal 2H (harness-side)
  - — TP sensor terminal B (harness-side) and PCM terminal 2A (harness-side)
  - — TP sensor terminal C (harness-side) and PCM terminal 2K (harness-side)

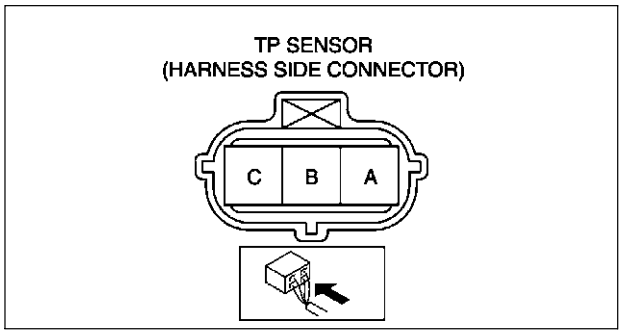

A6E3940W008

Short circuit

- If there is continuity, the circuit is shorted. Repair or replace the harness.
  - — TP sensor terminal C (harness-side) and power supply
  - — TP sensor terminal C (harness-side) and body GND
  - — TP sensor terminal B (harness-side) and power supply
  - — TP sensor terminal B (harness-side) and body GND
  - — TP sensor terminal A (harness-side) and power supply

MANIFOLD ABSOLUTE PRESSURE (MAP) SENSOR INSPECTION

A6E394018211W01

Note

- Perform the following inspection only when directed.
- The following vacuum values are indicated by relative pressure from the MAP sensor.

1. Connect the **SSTs** (WDS or equivalent) to the DLC-2.
2. Turn the ignition switch to ON (Engine OFF).
3. Select MAP PID on the **SSTs** (WDS or equivalent).
4. Verify that the MAP PID (pressure) and barometric pressure are practically equal.
   - If not as verified, perform the “Circuit Open/Short Inspection”.
     - — If there is no open or short circuit, replace the MAP sensor.
   - If as verified, go to next step.
5. Apply vacuum of **–25.0 kPa {–187 mmHg, –7.38 inHg}** to the MAP sensor, and verify that the MAP variation from that of Step 4 is approx. **25.0 kPa {187 mmHg, 7.38 inHg}**.
   - If not as verified, perform the “Circuit Open/Short inspection”.
     - — If there is no open or short circuit, replace the barometric pressure sensor.

Circuit Open/Short Inspection

1. Disconnect the PCM connector. (See F–43 PCM REMOVAL/INSTALLATION.)
2. Inspect the following wiring harness for open or short. (Continuity check)

Open circuit

- If there is no continuity, the circuit is open. Repair or replace the harness.
  - — MAP sensor terminal A (harness-side) and PCM terminal 2H
  - — MAP sensor terminal D (harness-side) and PCM terminal 1J
  - — MAP sensor terminal C (harness-side) and PCM terminal 2K

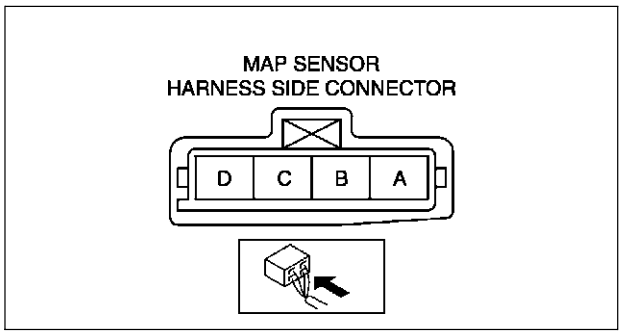

A6E3940W009

Short circuit

- If there is continuity, the circuit is shorted. Repair or replace the harness.
  - — MAP sensor terminal C (harness-side) and power supply.
  - — MAP sensor terminal C (harness-side) and body GND.
  - — MAP sensor terminal D (harness-side) and power supply.
  - — MAP sensor terminal D (harness-side) and body GND

ENGINE COOLANT TEMPERATURE (ECT) SENSOR REMOVAL/INSTALLATION

A6E394018840W01

Warning
- **When the engine is hot, it can badly burn. Turn off the engine and wait until it is cool before removing the ECT sensor.**

1. Drain the engine coolant. (See E–3 COOLING SYSTEM SERVICE WARNINGS.)
2. Disconnect the ECT sensor connector.
3. Remove the ECT sensor.
4. Install in the reverse order of removal.

Tightening torque
10—14 N·m
{1.02—1.42 kgf·m, 7.38—10.32 ft·lbf}

5. Refill the engine coolant. (See E–3 COOLING SYSTEM SERVICE WARNINGS.)

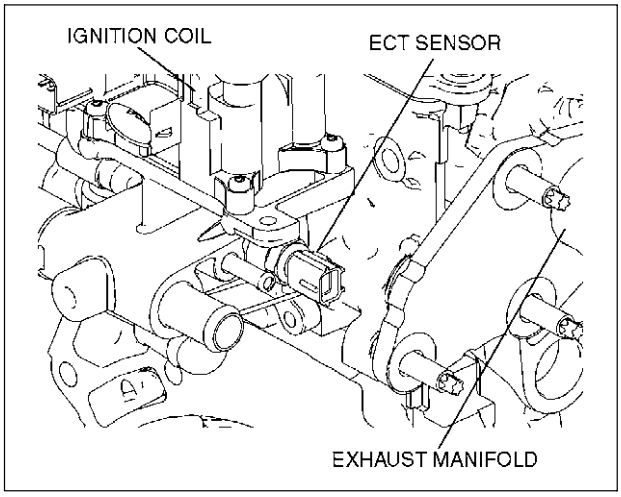

A6E3940W010

ENGINE COOLANT TEMPERATURE (ECT) SENSOR INSPECTION

A6E394018840W02

Note
- Perform the following inspection only when directed.

ECT Sensor Resistance Inspection

1. Drain the engine coolant. (See E–3 COOLING SYSTEM SERVICE WARNINGS.)
2. Remove the ECT sensor (located above the starter).
3. Place the ECT sensor in water with a thermometer, and heat the water gradually.
4. Measure the resistance between the ECT sensor terminals A and B using an ohmmeter.
   - If not as specified, replace the ECT sensor.
   - If the ECT sensor is okay, but ECT PID value is out of specification, perform the “Circuit Open/Short Inspection”.

Specification

Water temperature (°C {°F})	Resistance (kilohms)
20 {68}	35.48—39.20
70 {158}	5.07—5.60
80 {176}	3.65—4.02

Circuit Open/Short Inspection

1. Disconnect the PCM connector. (See F–43 PCM REMOVAL/INSTALLATION.)
2. Inspect the following wiring harnesses for open or short. (Continuity check)

Open circuit
- If there is no continuity, the circuit is open. Repair or replace the harness.
  — ECT sensor terminal A (harness-side) and PCM terminal 1M (harness-side)
  — ECT sensor terminal B (harness-side) and PCM terminal 2H (harness-side)

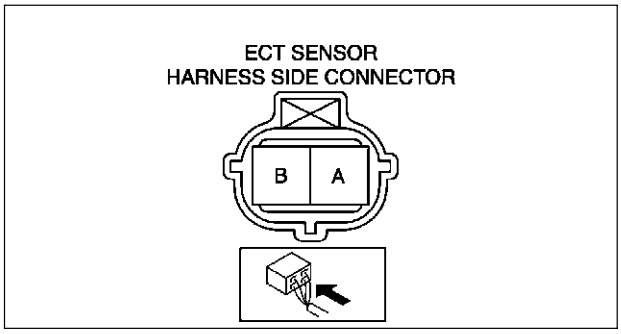

A6E3940W011

Short circuit
- If there is continuity, the circuit is shorted. Repair or replace the harness.
  — ECT sensor terminal A (harness-side) and power supply
  — ECT sensor terminal A (harness-side) and body GND

— ECT sensor terminal B (harness-side) and power supply

CRANKSHAFT POSITION (CKP) SENSOR INSPECTION

A6E394018230W01

Note
- Perform the following inspection only when directed.

Resistance Inspection
1. Disconnect the CKP sensor connector.
2. Measure the resistance between CKP sensor terminals A and B using an ohmmeter.
   - If not as specified, replace the CKP sensor.
   - If CKP sensor resistance is okay, but RPM PID value is out of specification, perform the “Circuit Open/Short Inspection”.

Specification
400—550 ohms

Circuit Open/Short Inspection
1. Disconnect the PCM connector. (See F–43 PCM REMOVAL/INSTALLATION.)
2. Inspect the following wiring harnesses for open or short. (Continuity check)

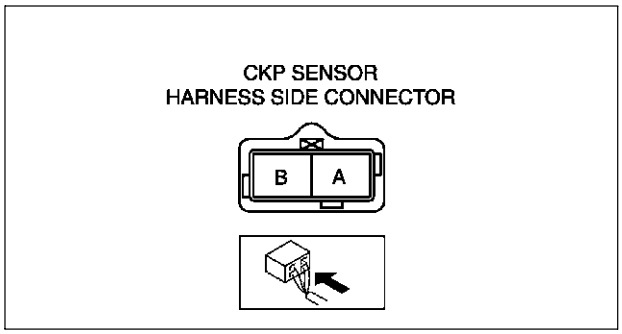

A6E3940W012

Open circuit
- If there is no continuity, the circuit is open. Repair or replace the harness.
  — CKP sensor terminal A (harness-side) and PCM terminal 2D (harness-side)
  — CKP sensor terminal B (harness-side) and PCM terminal 2G (harness-side)

Short circuit
- If there is continuity, the circuit is shorted. Repair or replace the harness.
  — CKP sensor terminal A (harness-side) and power supply
  — CKP sensor terminal A (harness-side) and body GND
  — CKP sensor terminal B (harness-side) and power supply
  — CKP sensor terminal B (harness-side) and body GND

CRANKSHAFT POSITION (CKP) SENSOR REMOVAL/INSTALLATION

A6E394018230W02

Removal
1. Perform the following procedure to making the working space.
   (1) Remove the Front wheel (RH).
   (2) Remove the splash shield.
2. Disconnect the CKP sensor connector.
3. Remove the installation bolts to remove the CKP sensor.

Installation

Caution
- **When foreign material such as an iron chip is on the CKP sensor, it can cause abnormal output from the sensor because of flux turbulence and adversely affect the engine control. Be sure there is no foreign material on the CKP sensor when replacing.**

1. Perform the following procedure so that piston No.1 is at the top dead center.
   (1) Remove the front driveshaft (RH). (See M–17 DRIVE SHAFT REMOVAL/INSTALLATION.)

(2) Remove the cylinder block lower blind plug and install the **SST**.
(3) Turn the crankshaft pulley to the clockwise until it stops.

2. Install the CKP sensor to the CKP sensor installer.
3. Fit the forked part of the CKP sensor installer with the ninth tooth (counting counterclockwise from the empty space) of the pulse wheel.
4. Install the CKP sensor fitting bolts.

Tightening torque
5.5—7.5 N·m {56—76 kgf·cm, 4.1—5.5 ft·lbf}

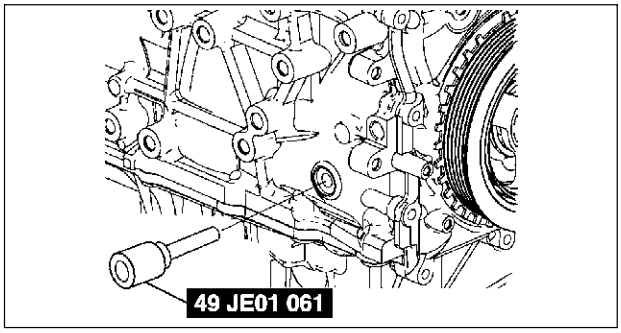

A6E3940W013

5. Remove the CKP sensor installer
6. Remove the **SST** then install the cylinder block lower blind plug.

Tightening torque
20 N·m {2.0 kgf·m, 15 ft·lbf}

7. Install the front driveshaft (RH). (See M–17 DRIVE SHAFT REMOVAL/INSTALLATION.)

CAMSHAFT POSITION (CMP) SENSOR INSPECTION

A6E394018200W01

Caution
- **When foreign material such as an iron chip is on the CMP sensor, it can cause abnormal output from the sensor because of flux turbulence and adversely affect the engine control. Be sure there is no foreign material on the CMP sensor when replacing.**

Note
- Perform the following inspection only when directed.

Resistance Inspection

1. Disconnect the CMP sensor connector.
2. Measure the resistance between CMP sensor terminals A and B using an ohmmeter.
   - If not as specified, replace the CMP sensor.
   - If CMP sensor resistance is okay, perform the “Circuit Open/Short Inspection”.

Specification
400—550 ohms

Circuit Open/Short Inspection

1. Disconnect the PCM connector. (See F–43 PCM REMOVAL/INSTALLATION.)
2. Inspect the following wiring harnesses for open or short. (Continuity check)

Open circuit
- If there is no continuity, the circuit is open. Repair or replace the harness.
  — CMP sensor terminal A (harness-side) and PCM terminal 2M (harness-side)
  — CMP sensor terminal B (harness-siede) and PCM terminal 2J (harness-side)

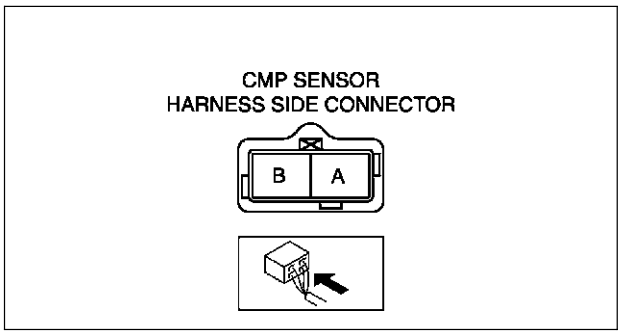

A6E3940W014

Short circuit
- If there is continuity, the circuit is shorted. Repair or replace the harness.
  — CMP sensor terminal A (harness-side) and power supply
  — CMP sensor terminal A (harness-side) and body GND
  — CMP sensor terminal B (harness-side) and power supply
  — CMP sensor terminal B (harness-side) and body GND

KNOCK SENSOR INSPECTION

A6E394018921W01

Note
- Perform the following test only when directed.

Resistance Inspection
1. Turn the ignition switch to LOCK.
2. Disconnect the knock sensor connector.
3. Measure the resistance between the knock sensor terminals A and B using an ohmmeter.
   - If not as specified, replace the knock sensor.
   - If the knock sensor is okay, but PID value is out of specification, perform the “Circuit Open/Short Inspection”.

Specification
Approx. 4.87 megohms

Circuit Open/Short Inspection
1. Disconnect the PCM connector. (See F–43 PCM REMOVAL/INSTALLATION.)
2. Inspect the following wiring harnesses for open or short. (Continuity check)

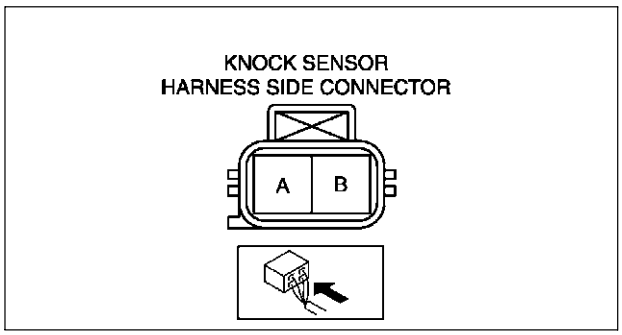

A6E3940W015

Open circuit
- If there is no continuity, the circuit is open. Repair or replace the harness.
  — Knock sensor terminal A (harness-side) and PCM terminal 2S (harness-side)
  — Knock sensor terminal B (harness-side) and PCM terminal 2P (harness-side)

Short circuit
- If there is continuity, the circuit is shorted. Repair or replace the harness.
  — Knock sensor terminal A (harness-side) and power supply
  — Knock sensor terminal A (harness-side) and body GND
  — Knock sensor terminal B (harness-side) and power supply
  — Knock sensor terminal B (harness-side) and body GND

KNOCK SENSOR REMOVAL/INSTALLATION

A6E394018921W02

1. Remove the intake manifold. (See F–10 INTAKE-AIR SYSTEM REMOVAL/INSTALLATION.)
2. Remove the knock sensor attachment bolt to remove the knock sensor.
3. Install in the reverse order of removal.

Tightening torque
16.2—23.8 N·m
{1.66—2.42 kgf·m, 12.0—17.5 ft·lbf}

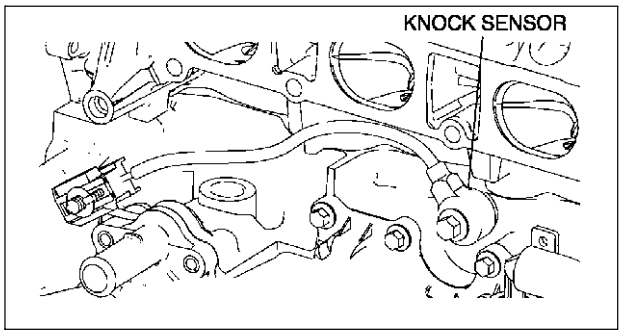

A6E3940W016

HEATED OXYGEN SENSOR (HO2S) INSPECTION

A6E394018861W01

HO2S Voltage Inspection

Note
- Perform the following inspection only when directed.

1. Warm up the engine and run it at idle.
2. Disconnect the HO2S connector.

3. Connect the voltmeter test leads to the following HO2S terminals:
   - HO2S (front and rear)
     — (+) lead—terminal A
     — (–) lead—terminal B
4. With the vehicle stopped, run the engine at **3,000 rpm** until the voltmeter moves between **0.5 and 0.7 V**.
5. Verify that the measurement voltage changes when the engine speed increases and decreases suddenly several times.
   - If not as specified, replace the HO2S.
   - If the HO2S is okay, but O2S11 or O2S12 PID value is out of specification, perform the “Circuit Open/Short Inspection”.

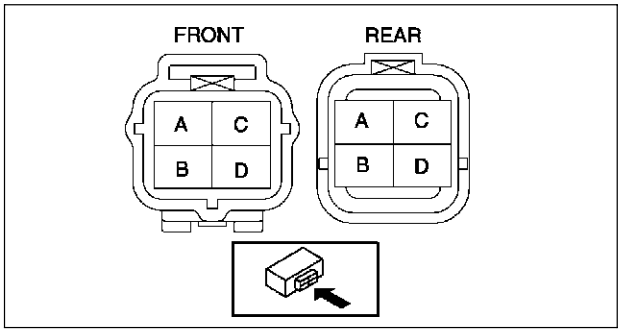

A6E3940W017

Specification

Engine speed	Voltage (V)
Acceleration	0.5—1.0
Deceleration	0—0.5

Circuit Open/Short Inspection (Sensor)

1. Disconnect the PCM connector. (See F–43 PCM REMOVAL/INSTALLATION.)
2. Inspect the following wiring harnesses for open or short. (Continuity check)

Open circuit

- If there is no continuity, the circuit is open. Repair or replace the harness.

  Front
  — HO2S terminal A (harness-side) and PCM terminal 1AB (harness-side)
  — HO2S terminal B (harness-side) and PCM terminal 2H (harness-side)

  Rear
  — HO2S terminal A (harness-side) and PCM terminal 1Y (harness-side)
  — HO2S terminal B (harness-side) and PCM terminal 2H (harness-side)

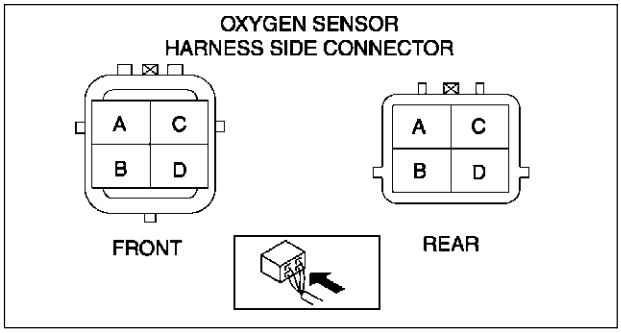

A6E3940W018

Short circuit

- If there is continuity, the circuit is shorted. Repair or replace the harness.

  Front and Rear
  — HO2S terminal A (harness-side) and body GND
  — HO2S terminal A (harness-side) and power supply
  — HO2S terminal B (harness-side) and power supply

HO2S Heater Resistance Inspection

1. Disconnect the HO2S connector.
2. Measure the resistance between the HO2S terminals C and D.
   - If not as specified, replace the HO2S.
   - If the HO2S heater is okay, but PID value is out of specification, perform the “Circuit Open/ Short Inspection”.

   Specification
   Front : 3.0—3.6 ohms
   Rear : 5—7 ohms

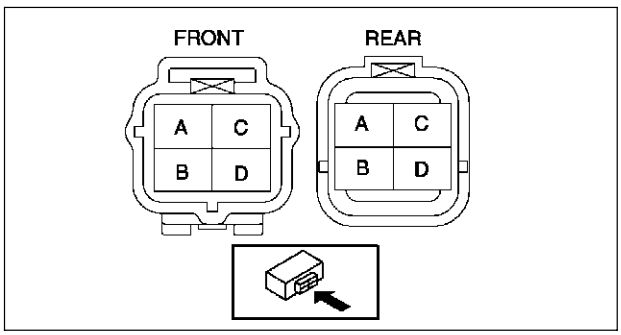

A6E3940W017

Circuit Open/Short Inspection (Heater)

1. Disconnect the PCM connector. (See F–43 PCM REMOVAL/INSTALLATION.)
2. Inspect the following wiring harnesses for open or short. (Continuity check)

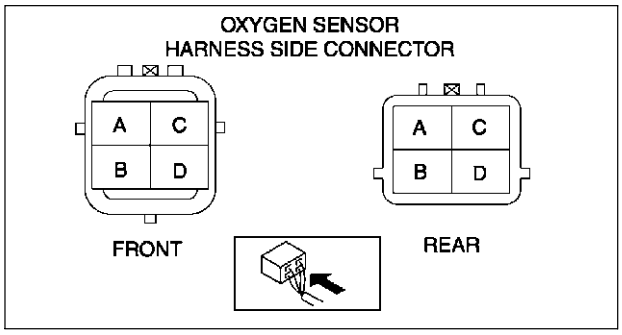

A6E3940W018

Open circuit

- If there is no continuity, the circuit is open. Repair or replace the harness.

  Front

  — HO2S terminal C (harness-side) and ignition switch
  — HO2S terminal D (harness-side) and PCM terminal 4A (harness-side)

  Rear

  — HO2S terminal C (harness-side) and ignition switch
  — HO2S terminal D (harness-side) and PCM terminal 4D (harness-side)

Short circuit

- If there is no continuity, the circuit is shorted. Repair or replace the harness.

  Front and rear

  — HO2S terminal C (harness-side) and body GND
  — HO2S terminal D (harness-side) and power supply
  — HO2S terminal D (harness-side) and body GND

POWER STEERING PRESSURE (PSP) SWITCH INSPECTION

A6E394032230W01

Note

- Perform the following inspection only when directed.

Continuity Inspection

1. Inspect the following if the power steering is inoperative (See N–4 POWER STEERING FLUID INSPECTION.):
   - Power steering fluid level
   - Power steering fluid leakage
   - Power steering fluid pressure
2. Disconnect the PSP switch connector.
3. Start the engine.
4. Inspect for continuity between the PSP switch terminal and GND using an ohmmeter.
   - If not as specified, replace the PSP switch.
   - If the PSP switch is okay, but PSP PID value is out of specification, perform the “Circuit Open Inspection”.

Specification

○——○ :Continuity

	Terminal	GND
Steering wheel in straight ahead position		
While turning sttering wheel	○	○

A6E3940W019

Circuit Open Inspection

1. Disconnect the PCM connector. (See F–43 PCM REMOVAL/INSTALLATION.)
2. Inspect the following harness for open or short. (Continuity check)

Open circuit

- If there is no continuity, the circuit is open. Repair or replace the harness.
  — PSP switch terminal (harness-side) and PCM terminal 1Z (harness-side)

Short circuit

- If there is continuity, the circuit is shorted. Repair or replace the harness.
  — PSP switch terminal (harness-side) and body GND

CLUTCH SWITCH INSPECTION

A6E394018660W01

Note
- Perform the following inspection only when directed.

Continuity Inspection
1. Verify that the clutch switch is installed properly.
2. Disconnect the negative battery cable.
3. Remove the clutch switch.
4. Inspect for continuity between the clutch switch terminals using an ohmmeter.
   - If the clutch switch is okay, but CPP PID value is out of specification, carry out of the “Clutch Switch Circuit Open/Short Inspection”.
   - If not as specified, replace the clutch switch.

Specification

○—○ :Continuity

Condition	Terminal	
	B	D
Rod pushed	○	○
Except above		

A6E3940W022

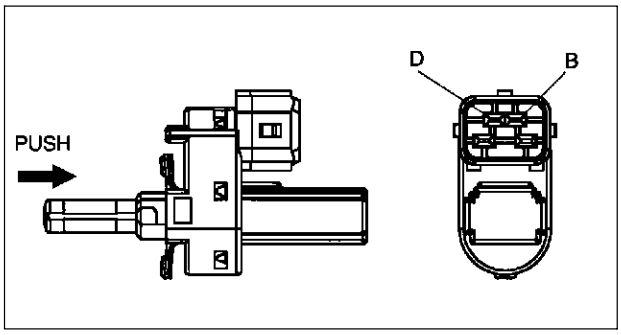

A6E3940W020

Circuit Open/Short Inspection
1. Disconnect the PCM connector. (See F–43 PCM REMOVAL/INSTALLATION.)
2. Inspect the following harness for open or short. (Continuity check)

Open circuit
- Clutch switch terminal B (harness-side) and PCM terminal 1R
- Clutch switch terminal D and body GND

Short circuit
- Clutch switch terminal B (harness-side) and power supply
- Clutch switch terminal B (harness-side) and body GND

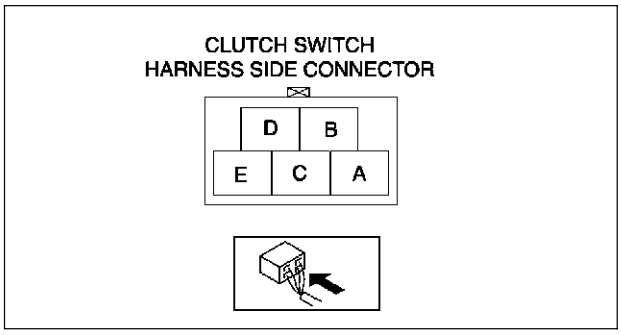

A6E3940W021

NEUTRAL SWITCH INSPECTION

A6E394017640W01

Note
- Perform the following inspection only when directed.

Continuity Inspection
1. Disconnect the negative battery cable.
2. Remove the neutral switch.J–5 MANUAL TRANSAXLE REMOVAL/INSTALLATION.)
3. Inspect for continuity between the neutral switch terminals using an ohmmeter.
   - If the neutral switch is okay, but CPP/PNP PID value is out of specification, carry out of the “Circuit Open/Short Inspection”.
   - If not as specified, replace the neutral switch.

Specification

○—○ : Continuity

Condition	Terminal	
	A	B
Rod pushed	○	○
Except above		

A6E3940W025

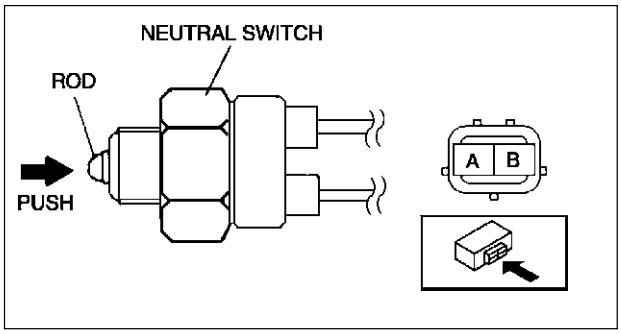

A6E3940W023

Circuit Open/Short Inspection

1. Disconnect the PCM connector. (See F–43 PCM REMOVAL/INSTALLATION.)
2. Inspect the following harness for open or short. (Continuity check)

Open circuit

- Neutral switch terminal B (harness-side) and PCM terminal 1W (harness-side)
- Neutral switch terminal A (harness-side) and body GND

Short circuit

- Neutral switch terminal B (harness-side) and body GND

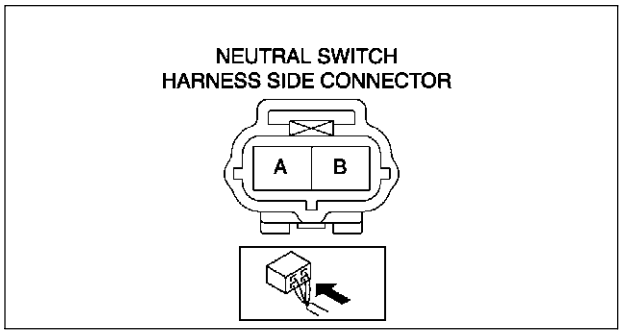

A6E3940W024

BAROMETRIC PRESSURE (BARO) SENSOR INSPECTION

A6E394018211W02

Note

- Perform the following inspection only when directed.
- The following vacuum values are indicated by relative pressure from the barometric pressure sensor.

1. Connect the **SSTs** (WDS or equivalent) to the DLC-2.
2. Turn the ignition switch to ON.
3. Select BARO on the **SSTs** (WDS or equivalent).
4. Verify that the BARO PID (pressure) and barometric pressure are practically equal.
   - If not as verified, perform the “Circuit Open/Short Inspection”.
     — If there is no open or short circuit, replace the barometric pressure sensor.
   - If as verified, go to next step.
5. Apply vacuum of **–25.0 kPa {–187 mmHg, –7.38 inHg}** to the barometric pressure sensor, and verify that the BARO variation from that of Step 4 is approx. **25.0 kPa {187 mmHg, 7.38 inHg}**.
   - If not as verified, perform the “Circuit Open/Short inspection”.
     — If there is no open or short circuit, replace the barometric pressure sensor.

Circuit Open/Short Inspection

1. Disconnect the PCM connector. (See F–43 PCM REMOVAL/INSTALLATION.)
2. Inspect the following wiring harness for open or short. (Continuity check)

Open circuit

- If there is no continuity, the circuit is open. Repair or replace the harness.
  — Barometric pressure sensor terminal A (harness-side) and PCM terminal 1G
  — Barometric pressure sensor terminal B (harness-side) and PCM terminal 2H
  — Barometric pressure sensor terminal C (harness-side) and PCM terminal 2K

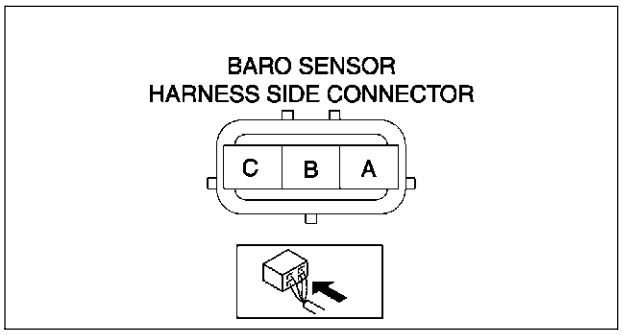

A6E3940W026

Short circuit

- If there is continuity, the circuit is shorted. Repair or replace the harness.
  — Barometric pressure sensor terminal C (harness-side) and power supply.
  — Barometric pressure sensor terminal C (harness-side) and body GND.
  — Barometric pressure sensor terminal A (harness-side) and power supply.
  — Barometric pressure sensor terminal A (harness-side) and body GND

ON-BOARD DIAGNOSTIC

FOREWORD

A6E397018881W01

- When the customer reports a vehicle malfunction, check the malfunction indicator lamp (MIL) indication and diagnostic trouble code (DTC), then diagnose the malfunction according to following flowchart.
  - — If a DTC exists, diagnose the applicable DTC inspection. (See F–67 DTC TABLE.)
  - — If no DTC exists and the MIL does not illuminate or flash, diagnose the applicable symptom troubleshooting. (See F–181 ENGINE SYMPTOM TROUBLESHOOTING.)

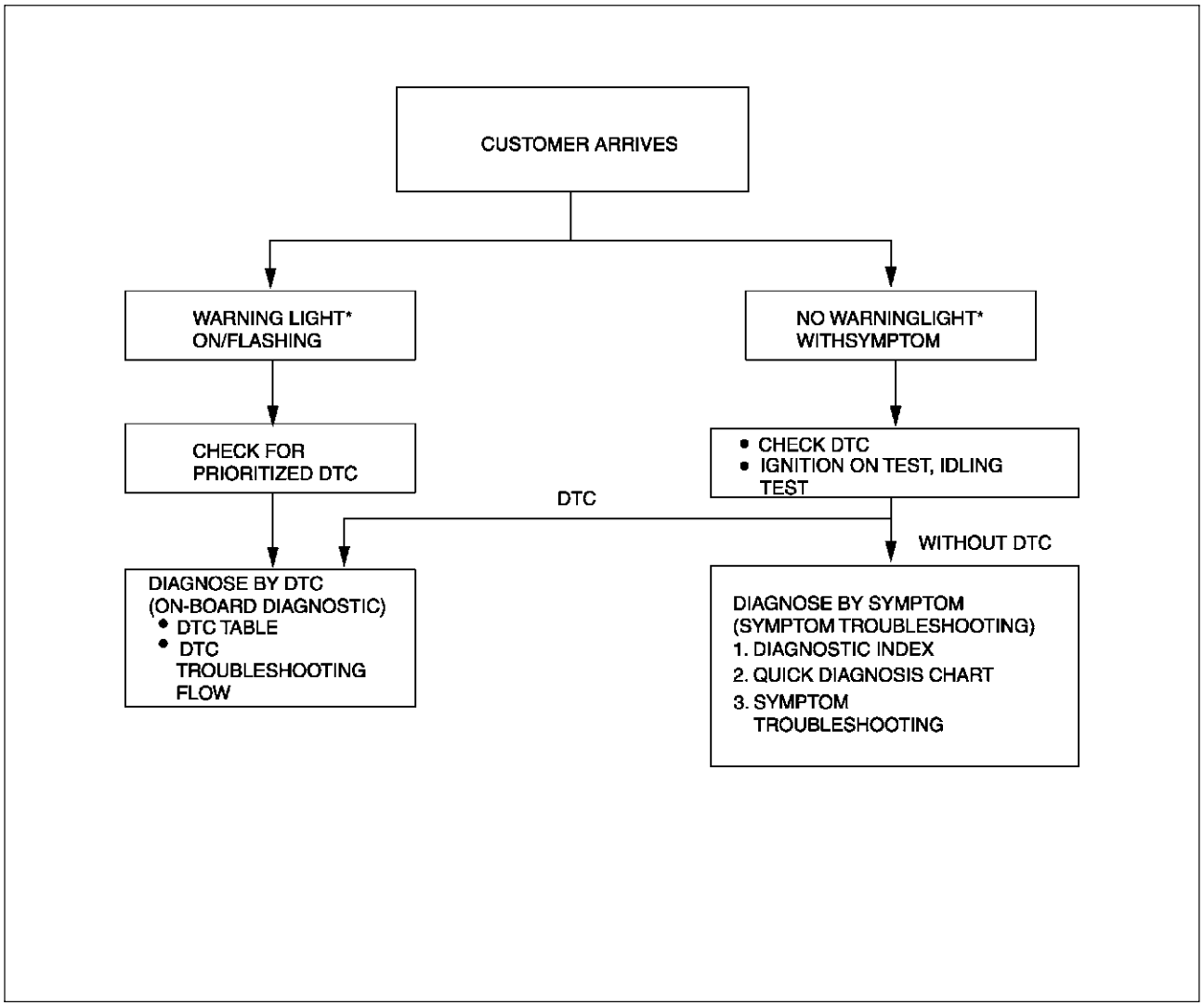

A6E3970W001

* : Malfunction Indicator lamp (MIL), Generator Warning Light, Security Light

OBD PENDING TROUBLE CODES

A6E397018881W02

- These appear when a problem is detected in a monitored system.

2 Drive Cycle Type

- The code for a failed system is stored in the PCM memory in the first drive cycle. If the problem is not found in the second drive cycle, the PCM judges that the system returned to normal or the problem was mistakenly detected, and deletes the pending code. If the problem is found in the second drive cycle too, the PCM judges that the system has failed, and stores the pending codes, and the DTCs.
- After pending codes are stored, if the PCM judges that the system is normal in any future drive cycle, the PCM deletes the pending codes.

1 Drive Cycle Type

- If any problems are detected in the first drive cycle, pending codes will be stored in the PCM memory, as well as DTCs.
- After pending codes are stored, if the PCM judges that the system is normal in any future drive cycle, the PCM deletes the pending codes.

OBD FREEZE FRAME DATA

A6E397018881W03

- This is the technical data which indicates the engine condition at the time of the first malfunction. This data will remain in the memory even if another emission-related DTC is stored, with the exception of the Misfire or Fuel System DTCs. Once freeze frame data for the Misfire or Fuel System DTC is stored, it will overwrite any previous data and the freeze frame will not be overwritten again.

OBD ON-BOARD SYSTEM READINESS TEST

A6E397018881W04

- This shows OBD system operating status. If any monitor function is incomplete, WDS or equivalent will identify which monitor function has not been completed. Misfires, Fuel System and Comprehensive Components (CCM) are continuous monitoring-type functions. The catalyst, EGR system and oxygen sensor will be monitored under drive cycles. The OBD diagnostic system is initialized by performing the DTC cancellation procedure or disconnecting the negative battery cable.

OBD DIAGNOSTIC MONITORING TEST RESULTS

A6E397018881W05

- These results from the intermittent monitor system's technical data, which are used to determine whether the system is normal or not. They also display the system thresholds and diagnostic results. The intermittent monitor system monitors the oxygen sensorand the catalyst.

OBD READ/CLEAR DIAGNOSTIC TEST RESULTS

A6E397018881W06

- This retrieves all stored DTCs in the PCM and clears the DTCs, Freeze Frame Data, On-Board Readiness Test Results, Diagnostic Monitoring Test Results and Pending Trouble Codes.

OBD PARAMETER IDENTIFICATION (PID) ACCESS

A6E397018881W07

- The PID mode allows access to certain data values, analog and digital inputs and outputs, calculated values and system status information. Since PID values for output devices are PCM internal data values, inspect each device to identify which output devices are malfunctioning.

ON-BOARD DIAGNOSTIC TEST

A6E397018881W08

DTCs Reading Procedure

1. Perform the necessary vehicle preparation and visual inspection.
2. Connect WDS or equivalent to the vehicle DLC-2 16-pin connector located as shown in the figure.
3. Retrieve DTCs by WDS or equivalent.

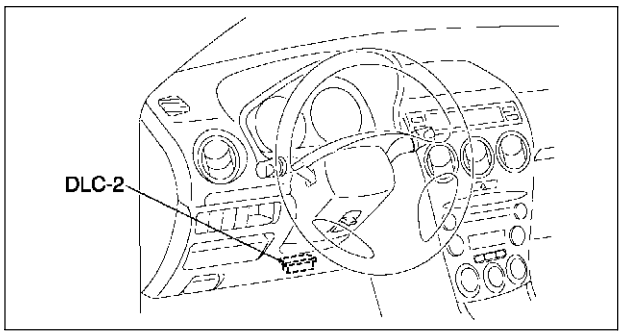

A6E3970W002

Pending Trouble Code Access Procedure

1. Perform the necessary vehicle preparation and visual inspection.
2. Connect WDS or equivalent to the vehicle DLC-2 16-pin connector located as shown in the figure.
3. Retrieve **PENDING TROUBLE CODES** by WDS or equivalent.

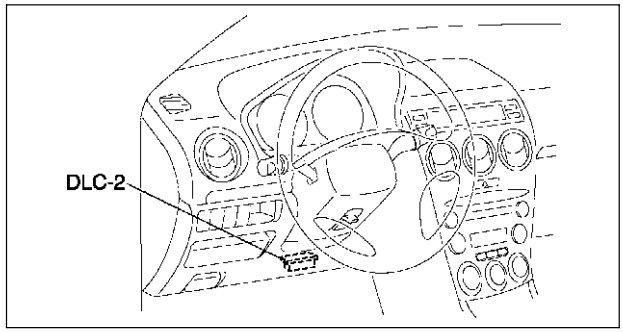

A6E3970W002

Freeze Frame PID Data Access Procedure

1. Perform the necessary vehicle preparation and visual inspection.
2. Connect WDS or equivalent to the vehicle DLC-2 16-pin connector located as shown in the figure.
3. Record the FREEZE FRAME DATA by WDS or equivalent.

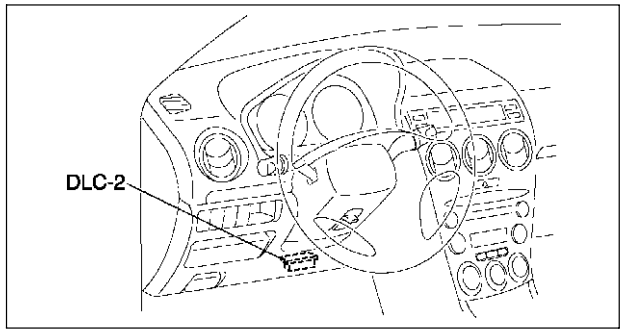

A6E3970W002

On-Board System Readiness Tests Access Procedure

1. Perform the necessary vehicle preparation and visual inspection.
2. Connect WDS or equivalent to the vehicle DLC-2 16-pin connector located as shown in the figure.
3. Monitor the OBD systems operating status by WDS or equivalent.

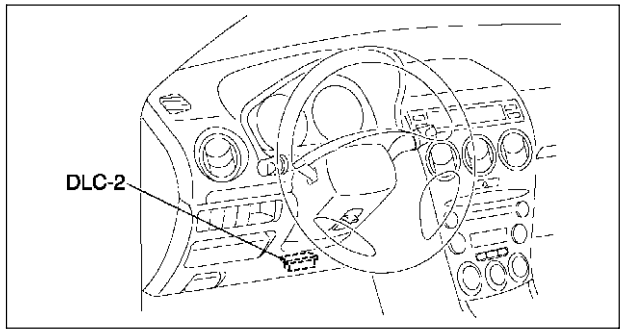

A6E3970W002

Diagnostic Monitoring Test Results Access Procedure

1. Perform the necessary vehicle preparation and visual inspection.
2. Connect WDS or equivalent to the vehicle DLC-2 16-pin connector located as shown in the figure.
3. Access to the DIAGNOSTIC MONITORING TEST RESULTS and read the test results by WDS or equivalent.

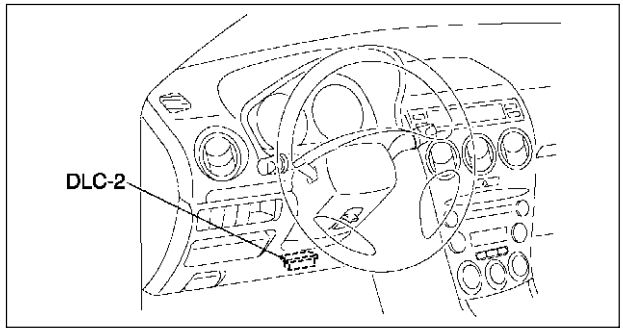

A6E3970W002

OBD DRIVE MODE

A6E397018881W09

- Performing the Drive Mode inspects the OBD system for proper operation. The Drive Mode must be performed to ensure that no additional DTCs are present.
- During Drive Mode, the following systems are inspected:
  — Oxygen sensor (HO2S)
  — Oxygen sensor heater
  — Catalytic converter (TWC)

Caution

- **While performing the Drive Mode, always operate the vehicle in a safe and lawful manner.**
- **When the WDS or equivalent is used to observe monitor system condition while driving, be sure to have another technician with you, or record the data in the WDS or equivalent using the PID/DATA MONITOR AND RECORD function and inspect later.**

Note

- Vehicle speed and engine speed detected by the PCM may differ from that indicated by the speedometer and tachometer. Use the WDS or equivalent to monitor vehicle speed.
- If the OBD system inspection is not completed during the Drive Mode, the following causes are considered:
  1. The OBD system detects the malfunction.
  2. The Drive Mode procedure is not completed correctly.
- Disconnecting the battery will reset the memory. Do not disconnect the battery during and after Drive Mode.
- The WDS or equivalent can be used at anytime through the course of Drive Mode to monitor the completion condition. Monitoring can be done by viewing the ON-BOARD SYSTEM READINESS menu.

PCM Adaptive Memory Procedure Drive Mode

Note

- The PCM adaptive memory condition can be confirmed with RFCFLAG PID.
- If RFCFLAG PID is ON, PCM Adaptive Memory Procedure Drive Mode is not necessary, because PCM already has adaptive memory.
- If RFCFLAG PID is OFF, PCM Adaptive Memory Procedure Drive should be performed before HO2S Heater, HO2S, and TWC Repair Verification Drive Mode.

1. Start the engine and warm it up completely.
2. Verify all accessory loads (A/C, headlights, blower fan, rear window defroster) are off.
3. Perform no load racing at the engine speed shown in the graph, then idle the engine for **more than 30 s** after the cooling fan is stopped. If possible, monitor RPM PID for engine speed and FAN1 PID for cooling fan condition during this procedure.
4. Turn ignition key off then on again.
5. Access to RFC FLAG PID to confirm PCM adaptive memory condition. If RFCFLAG PID is ON, PCM Adaptive Memory Procedure Drive is completed.
6. If RFCFLAGPID is still OFF, go back to Step 1.

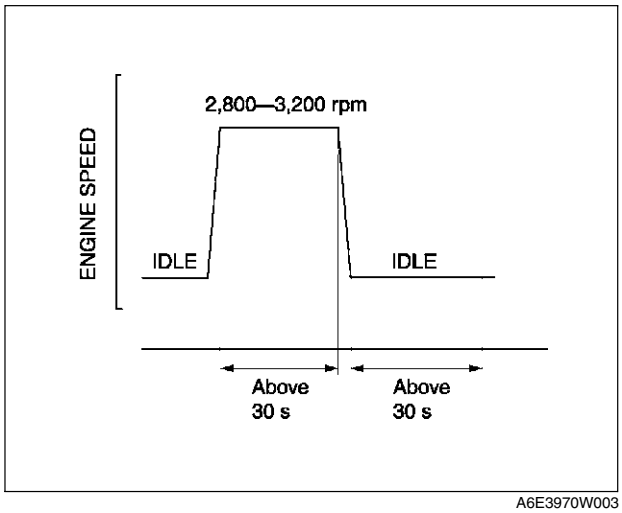

A6E3970W003

HO2S Heater, HO2S, and TWC Repair Verification Drive Mode

1. Access to RFCFLAG PID to confirm PCM adaptive memory condition. If RFCFLAG PID is OFF, perform PCM Adaptive Memory Procedure Drive first.
2. If RFCFLAG PID is ON, start the engine and warm it up completely.
3. Verify all accessory loads (A/C, headlights, blower fan, rear window defroster) are off.
4. Drive the vehicle as shown in the graph; first drive in zone O, then A or B, followed by C or D, finally E or F. Driving condition before the constant speed driving is not specified.

For MTX

Zone	Shift Position	Vehicle Speed km/h {mph}	Time Sec.
O	Neutral	0 {0}	T1: Above 455
A	2nd	40—50 {25—32}	T2: Above 30
B	3rd	65—75 {41—47}	
C	2nd	60—75 {38—46}	T3: Above 20
D	3rd	75—100 {47—62}	
E	4th	50—75 {31—46}	T4: Above 120
F	5th	75—100 {47—62}	

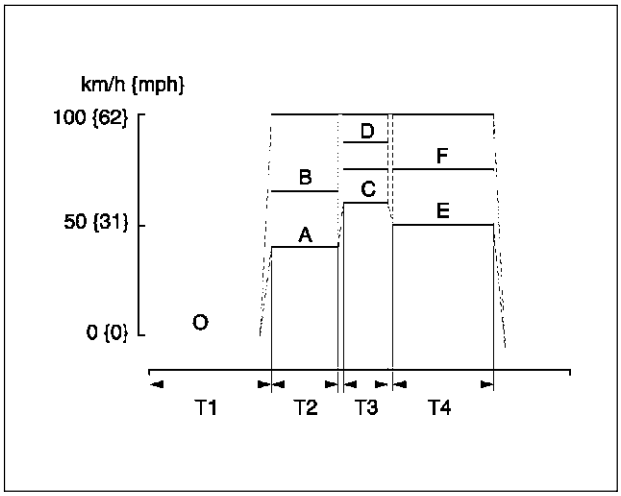

A6E3970W004

For ATX

Zone	Range	Vehicle Speed km/h {mph}	Time Sec.
O	P or N	0 {0}	T1: Above 455
A	S (HOLD)	40—65 {25—41}	T2: Above 30
B	D (HOLD)	65—100 {40—62}	
C	S (HOLD)	60—75 {38—46}	T3: Above 20
D	D (HOLD)	85—100 {52—62}	
E	D (HOLD)	50—75 {31—47}	T4: Above 120
F	D	75—100 {46—62}	

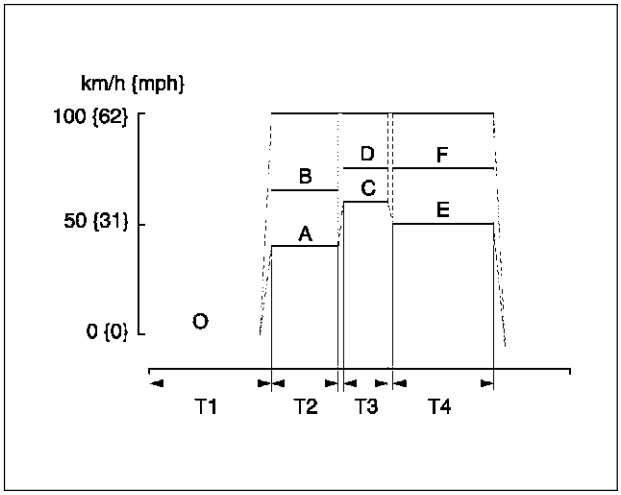

A6E3970W005

5. Stop vehicle and access to ON BOARD SYSTEM READINESS menu of GENERIC OBD FUNCTION to inspect the Drive Mode completion condition. If completed, RFC changes from NO to YES.
6. If not completed, turn the ignition key to OFF, then go back to Step 4.
7. Access DIAGNOSTIC MONITORING TEST RESULTS menu of GENERIC OBD FUNCTIONS to inspect the monitor results. If MEAS are not within the specification, repair has not completed.
8. Verify no DTC is available.

DIAGNOSTIC MONITORING TEST RESULTS

A6E397018881W10

- The purpose of this test mode is to confirm the result of OBD monitor diagnostic test results. The result values stored when particular monitor is completed are displayed. If the monitor is not completed, initial value is displayed.

TEST ID	Description	Related system
10:01:0A	Rich to lean sensor threshold voltage	HO2S
10:02:0A	Lean to rich sensor threshold voltage	
10:03:0A	Low sensor voltage for switching time calculation	
10:04:0A	High sensor voltage for switching time calculation	
10:05:10	Rich to lean sensor switching time	
10:06:10	Lean to rich sensor switching time	
10:0A:10	Sensor period	
10:80:20	Front and rear HO2S switching time ratio	TWC

DTC CONFIRMATION PROCEDURE

A6E397018881W11

STEP	INSPECTION		ACTION
1	**RECORD CONTINUOUS MEMORY DTC AND FREEZE FRAME DATA** • Turn ignition key to ON (Engine OFF). • Connect WDS or equivalent to DLC. • Retrieve all stored DTCs. • Are there any DTCs present?	Yes	Record all stored DTCs (Continuous Memory DTC) and Freeze Frame Data on repair order, then go to next step.
		No	Go to next step.
2	**VERIFY RELATED REPAIR INFORMATION** • Check for related Service information availability. • Is any related repair information available?	Yes	Perform repair or diagnosis according to available Service information. • If vehicle is not repaired, go to next step.
		No	Go to next step.
3	**PERFORM KEY ON ENGINE OFF (KOEO) SELF-TEST** • Start engine. • Warm up engine completely. • Turn off all electrical loads. • Perform KOEO SELF-TEST PROCEDURE. (See F–66 KOEO/KOER SELF-TEST) • Are there any KOEO DTCs present?	Yes	Repair KOEO DTC. (See F–67 DTC TABLE)
		No	Go to next step.
4	**PERFORM KEY ON ENGINE RUNNING (KOER) SELF-TEST** • Start engine. • Perform KOER SELF-TEST PROCEDURE. (See F–66 KOEO/KOER SELF-TEST) • Are there any KOER DTCs present?	Yes	Repair KOER DTC. (See F–67 DTC TABLE
		No	• If Continuous Memory DTC is present at Step 1, return to applicable DTC troubleshooting procedure step. • If Continuous Memory DTC is not present at Step 1, go to symptom troubleshooting.

KOEO/KOER SELF-TEST

1. Connect WDS or equivalent to the vehicle DLC-2 16-pin connector located as shown in the figure.
2. Perform KOEO/KOER self-test.

A6E397018881W12

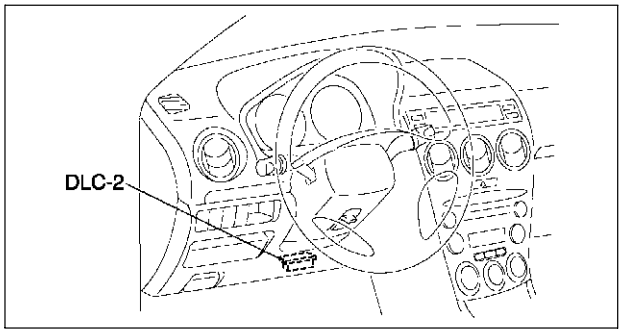

A6E3970W002

AFTER REPAIR PROCEDURE

1. Connect WDS or equivalent to the vehicle DLC-2 16-pin connector located as shown in the figure.
2. Turn the ignition key from OFF to ON.
3. Record DTC if retrieved.
4. Erase all diagnostic data by WDS or equivalent.

A6E397018881W13

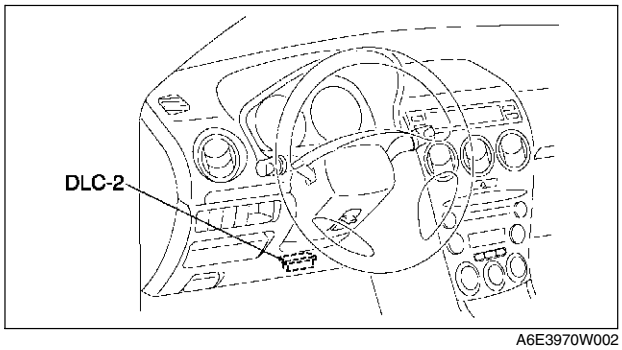

A6E3970W002

DTC TABLE

DTC table

A6E397018881W14

×: Applicable
—: Not applicable

DTC No.	Condition	MIL	DC	Monitor item	Memory function	Page
P0010	CMP actuator circuit malfunction	ON	1	CCM	×	(See F–70 DTC P0010)
P0011	CMP timing over-advanced	ON	1	CCM	×	(See F–72 DTC P0011)
P0012	CMP timing over-retarded	ON	1	CCM	×	(See F–73 DTC P0012)
P0031	Front HO2S heater circuit low input	ON	2	O_2 sensor heater	×	(See F–74 DTC P0031)
P0032	Front HO2S heater circuit high input	ON	2	O_2 sensor heater	×	(See F–76 DTC P0032)
P0037	Rear HO2S heater circuit low input	ON	2	O_2 sensor heater	×	(See F–78 DTC P0037)
P0038	Rear HO2S heater circuit high input	ON	2	O_2 sensor heater	×	(See F–80 DTC P0038)
P0101	MAF sensor inconsistent with TP sensor	ON	2	CCM	×	(See F–81 DTC P0101)
P0102	MAF circuit low input	ON	1	CCM	×	(See F–83 DTC P0102)
P0103	MAF circuit high input	ON	1	CCM	×	(See F–85 DTC P0103)
P0107	MAP sensor circuit low input	ON	1	CCM	×	(See F–86 DTC P0107)
P0108	MAP sensor circuit high input	ON	1	CCM	×	(See F–88 DTC P0108)
P0111	IAT circuit performance problem	ON	2	CCM	×	(See F–90 DTC P0111)
P0112	IAT circuit low input	ON	1	CCM	×	(See F–91 DTC P0112)
P0113	IAT circuit high input	ON	1	CCM	×	(See F–92 DTC P0113)
P0117	ECT circuit low input	ON	1	CCM	×	(See F–94 DTC P0117)
P0118	ECT circuit high input	ON	1	CCM	×	(See F–96 DTC P0118)
P0121	TP stuck closed	ON	2	CCM	×	(See F–98 DTC P0121)
P0122	TP circuit low input	ON	1	CCM	×	(See F–100 DTC P0122)
P0123	TP circuit high input	ON	1	CCM	×	(See F–102 DTC P0123)
P0125	Excessive time to enter closed loop fuel control	ON	2	CCM	×	(See F–104 DTC P0125)
P0131	Front HO2S no inversion (stuck low)	ON	2	CCM	×	(See F–105 DTC P0131, P0132)
P0132	Front HO2S no inversion (stuck high)	ON	2	CCM	×	(See F–105 DTC P0131, P0132)
P0133	Front HO2S circuit malfunction	ON	2	O_2 sensor	×	(See F–108 DTC P0133)
P0134	Front HO2S circuit no activity detected	ON	2	CCM	×	(See F–110 DTC P0134)
P0138	Rear HO2S circuit high input	ON	2	CCM	×	(See F–112 DTC P0138)
P0140	Rear HO2S circuit no activity detected	ON	2	CCM	×	(See F–114 DTC P0140)
P0171	Fuel trim system too lean	ON	2	Fuel	×	(See F–116 DTC P0171)
P0172	Fuel trim system too rich	ON	2	Fuel	×	(See F–119 DTC P0172)
P0300	Random misfire detected	Flash / ON	1 or 2	Misfire	×	(See F–121 DTC P0300)
P0301	Cylinder No.1 misfire detected	Flash / ON	1 or 2	Misfire	×	(See F–124 DTC P0301, P0302, P0303, P0304)
P0302	Cylinder No.2 misfire detected	Flash / ON	1 or 2	Misfire	×	
P0303	Cylinder No.3 misfire detected	Flash / ON	1 or 2	Misfire	×	
P0304	Cylinder No.4 misfire detected	Flash / ON	1 or 2	Misfire	×	
P0327	Knock sensor circuit low input	ON	1	CCM	×	(See F–126 DTC P0327)
P0328	Knock sensor circuit high input	ON	1	CCM	×	(See F–128 DTC P0328)
P0335	CKP sensor circuit malfunction	ON	1	CCM	×	(See F–130 DTC P0335)
P0340	CMP sensor circuit malfunction	ON	1	CCM	×	(See F–132 DTC P0340)
P0403	EGR valve motor coils open or short	ON	2	CCM	×	(See F–134 DTC P0403)
P0420	Catalyst system efficiency below threshold	ON	2	Catalyst	×	(See F–137 DTC P0420)

DTC No.	Condition	MIL	DC	Monitor item	Memory function	Page
P0443	Evaporative emission control system purge control valve circuit malfunction	ON	2	CCM	×	(See F–138 DTC P0443)
P0480	Fan relay control circuit malfunction	OFF	2	Other	×	(See F–140 DTC P0480)
P0500	Vehicle speed sensor (VSS) circuit malfunction (MTX)	ON	2	CCM	×	(See F–142 DTC P0500)
	Vehicle speed sensor (VSS) circuit malfunction (ATX)	(See K–53 DTC TABLE)				
P0505	Idle control system malfunction	OFF	—	Other	—	(See F–144 DTC P0505)
P0506	Idle control system RPM lower than expected	ON	2	CCM	×	(See F–145 DTC P0506)
P0507	Idle control system RPM higher than expected	ON	2	CCM	×	(See F–147 DTC P0507)
P0511	Idle control system circuit malfunction	ON	1	CCM	×	(See F–148 DTC P0511)
P0550	PSP switch circuit malfunction	ON	2	CCM	×	(See F–150 DTC P0550)
P0602	PCM programming error	ON	1	CCM	×	(See F–152 DTC P0602)
P0610	Control module vehicle options error	ON	1	CCM	×	(See F–152 DTC P0610)
P0661	VIS control circuit low input	OFF	2	Other	×	(See F–153 DTC P0661)
P0662	VIS control circuit high input	OFF	2	Other	×	(See F–154 DTC P0662)
P0703	Brake switch input malfunction	ON	2	CCM	×	(See F–156 DTC P0703)
P0704	Clutch switch input malfunction	ON	2	CCM	×	(See F–158 DTC P0704)
P0706	Transaxle range (TR) switch circuit range/performance	(See K–53 DTC TABLE)				
P0707	Transaxle range (TR) switch circuit low input	(See K–53 DTC TABLE)				
P0708	Transaxle range (TR) switch circuit high input	(See K–53 DTC TABLE)				
P0711	Transaxle fluid temperature (TFT) sensor circuit range/ performance (Stuck)	(See K–53 DTC TABLE)				
P0712	Transaxle fluid temperature (TFT) sensor circuit malfunction (short to ground)	(See K–53 DTC TABLE)				
P0713	Transaxle fluid temperature (TFT) sensor circuit malfunction (open circuit)	(See K–53 DTC TABLE)				
P0715	Input/turbine speed sensor circuit malfunction	(See K–53 DTC TABLE)				
P0731	Gear 1 incorrect (Incorrect Gear Ratio Detected)	(See K–53 DTC TABLE)				
P0732	Gear 2 incorrect (Incorrect Gear Ratio Detected)	(See K–53 DTC TABLE)				
P0733	Gear 3 incorrect (Incorrect Gear Ratio Detected)	(See K–53 DTC TABLE)				
P0734	Gear 4 incorrect (Incorrect Gear Ratio Detected)	(See K–53 DTC TABLE)				
P0741	Torque converter clutch (TCC) (stuck OFF)	(See K–53 DTC TABLE)				
P0742	Torque converter clutch (TCC) (stuck ON)	(See K–53 DTC TABLE)				
P0745	Pressure control solenoid malfunction	(See K–53 DTC TABLE)				
P0751	Shift solenoid A stuck OFF	(See K–53 DTC TABLE)				
P0752	Shift solenoid A stuck ON	(See K–53 DTC TABLE)				
P0753	Shift solenoid A malfunction (electrical)	(See K–53 DTC TABLE)				
P0756	Shift solenoid B stuck OFF	(See K–53 DTC TABLE)				

DTC No.	Condition	MIL	DC	Monitor item	Memory function	Page
P0757	Shift solenoid B stuck ON	(See K–53 DTC TABLE)				
P0758	Shift solenoid B malfunction (electrical)	(See K–53 DTC TABLE)				
P0761	Shift solenoid C stuck OFF	(See K–53 DTC TABLE)				
P0762	Shift solenoid C stuck ON	(See K–53 DTC TABLE)				
P0763	Shift solenoid C malfunction (electrical)	(See K–53 DTC TABLE)				
P0766	Shift solenoid D stuck OFF	(See K–53 DTC TABLE)				
P0767	Shift solenoid D stuck ON	(See K–53 DTC TABLE)				
P0768	Shift solenoid D malfunction (electrical)	(See K–53 DTC TABLE)				
P0771	Shift solenoid E stuck OFF	(See K–53 DTC TABLE)				
P0772	Shift solenoid E stuck ON	(See K–53 DTC TABLE)				
P0773	Shift solenoid E malfunction (electrical)	(See K–53 DTC TABLE)				
P0841	Oil pressure switch circuit malfunction	(See K–53 DTC TABLE)				
P0850	Neutral switch input malfunction	ON	2	CCM	×	(See F–160 DTC P0850)
P1410	Variable air duct valve circuit malfunction	OFF	2	Other	×	(See F–162 DTC P1410)
P1562	PCM +BB voltage low	ON	1	CCM	×	(See F–164 DTC P1562)
P2006	Variable tumble control system shutter valve stuck closed	ON	2	CCM	×	(See F–166 DTC P2006)
P2009	Variable tumble control solenoid valve circuit low input	ON	2	CCM	×	(See F–168 DTC P2009)
P2010	Variable tumble control solenoid valve circuit high input	ON	2	CCM	×	(See F–170 DTC P2010)
P2228	BARO sensor circuit low input	ON	1	CCM	×	(See F–172 DTC P2228)
P2229	BARO sensor circuit high input	ON	1	CCM	×	(See F–174 DTC P2229)
P2502	Generator output voltage signal no electricity	OFF	1	Other	—	(See F–176 DTC P2502)
P2503	Battery overcharge	OFF	1	Other	—	(See F–177 DTC P2503)
P2504	Generator terminal B circuit open	OFF	1	Other	—	(See F–178 DTC P2504)
U0073	CAN bus off	OFF	1	Other	—	(See T–141 MULTIPLEX COMMUNICATION SYSTEM)
U0121	PCM cannot receive any signals from ABS, ABS/TCS or DSC HU/CM	ON	1	Other	×	(See T–141 MULTIPLEX COMMUNICATION SYSTEM)
U0155	PCM cannot receive any signals from combination meter	ON	1	Other	×	(See T–141 MULTIPLEX COMMUNICATION SYSTEM)

F

DTC P0010

A6E397001084W01

DTC P0010	CMP actuator circuit
DETECTION CONDITION	• PCM monitors OCV voltage. If PCM detects OCV control voltage (calculated from OCV) is above or below the threshold voltage (calculated from battery positive voltage), PCM determines that OCV circuit has malfunction. **Diagnostic support note** • This is a continuous monitor (CCM). • MIL illuminates if PCM detects the above malfunction condition during first drive cycle. • PENDING CODE is available if PCM detects the above malfunction. • FREEZE FRAME DATA is available. • DTC is stored in PCM memory.
POSSIBLE CAUSE	• OCV circuit malfunction • Open circuit between OCV terminal B and main relay • Short to GND between OCV terminal A and PCM terminal 4M • Short to power between OCV terminal A and PCM terminal 4M • Open circuit between OCV terminal A and PCM terminal 4M • Poor connection of OCV connector or PCM connector • PCM malfunction

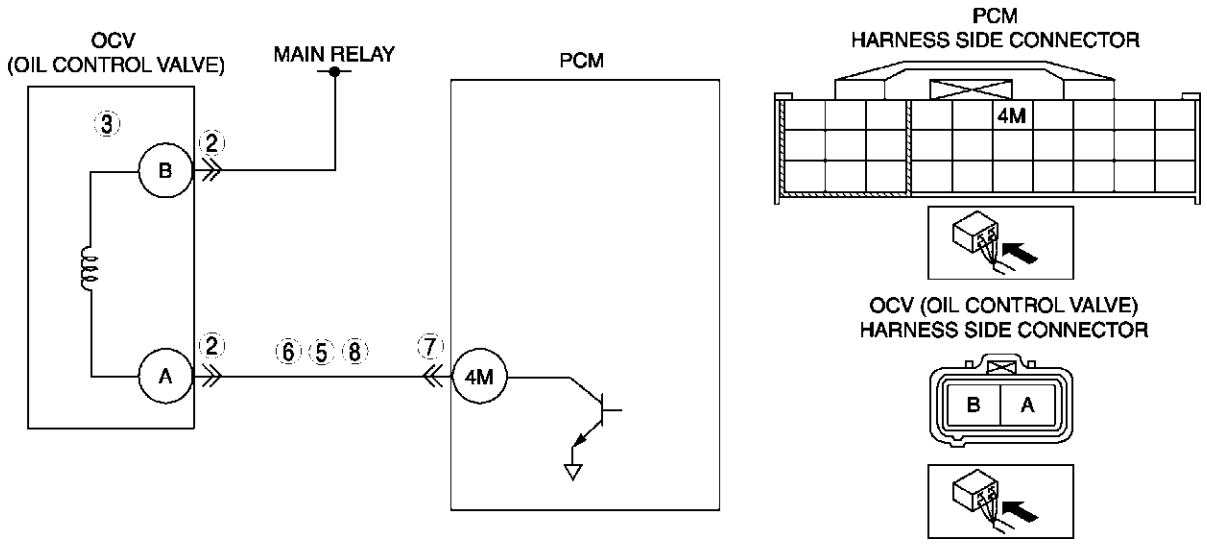

Diagnostic procedure

STEP	INSPECTION		ACTION
1	**PERFORM DTC CONFIRMATION PROCEDURE** • Perform DTC CONFIRMATION PROCEDURE. (See F–66 DTC CONFIRMATION PROCEDURE.) • Is same DTC present?	Yes	Go to next step.
		No	Intermittent concern exists. Go to INTERMITTENT CONCERN TROUBLESHOOTING procedure. (See F–227 INTERMITTENT CONCERN TROUBLESHOOTING.)
2	**INSPECT OCV CONNECTOR FOR POOR CONNECTION** • Turn ignition key to OFF. • Disconnect OCV connector. • Inspect for poor connection (damaged, pulled-out terminals, corrosion, etc.). • Are there any malfunctions?	Yes	Repair or replace terminal, then go to Step 9.
		No	Go to next step.
3	**INSPECT OCV (OIL CONTROL VALVE) ELECTRICAL MALFUNCTION** • Inspect OCV. (See B–33 OIL CONTROL VALVE (OCV) INSPECTION.) • Is OCV okay?	Yes	Go to next step.
		No	Replace OCV, then go to Step 9.

STEP	INSPECTION		ACTION
4	**CLASSIFY MALFUNCTION AT POWER SUPPLY CIRCUIT OR CONTROL CIRCUIT** • Turn ignition key to ON (Engine OFF). • Measure voltage between OCV terminal B (harness-side) and body GND. • Is voltage **B+**?	Yes	Malfunction at control circuit. Go to next step.
		No	Malfunction at power supply circuit. Repair or replace harness for open circuit, then go to Step 9.
5	**INSPECT CONTROL CIRCUIT FOR SHORT TO POWER** • Turn ignition key to ON (Engine OFF). • Measure voltage between OCV terminal A (harness-side) and body GND. • Is voltage **B+**?	Yes	Repair or replace harness for short to power, then go to Step 9.
		No	Go to next step.
6	**INSPECT CONTROL CIRCUIT FOR SHORT TO GND** • Turn ignition key to OFF. • Inspect for continuity between OCV terminal A (harness-side) and body GND. • Is there continuity?	Yes	Repair or replace harness for short to GND, then go to Step 9.
		No	Go to next step.
7	**INSPECT PCM CONNECTOR FOR POOR CONNECTION** • Turn ignition key to OFF. • Disconnect PCM connector. • Inspect for poor connection at terminal 4M (damaged, pulled-out terminals, corrosion, etc.). • Are there any malfunctions?	Yes	Repair terminal, then go to Step 9.
		No	Go to next step.
8	**INSPECT CONTROL CIRCUIT FOR OPEN CIRCUIT** • Turn ignition key to OFF. • Inspect for continuity between OCV (oil control valve) terminal A (harness-side) and PCM terminal 4M (harness-side). • Is there continuity?	Yes	Go to next step.
		No	Repair or replace harness for open, then go to next step.
9	**VERIFY TROUBLESHOOTING OF DTC P0010 COMPLETED** • Make sure to reconnect all disconnected connectors. • Clear DTC from PCM memory using WDS or equivalent. • Perform KOEO/KOER self-test. (See F–66 KOEO/KOER SELF-TEST.) • Is same DTC present?	Yes	Replace PCM, then go to next step. (See F–43 PCM REMOVAL/INSTALLATION.)
		No	Go to next step.
10	**VERIFY AFTER REPAIR PROCEDURE** • Perform “After Repair Procedure”. (See F–66 AFTER REPAIR PROCEDURE.) • Is there any DTC present?	Yes	Go to applicable DTC troubleshooting. (See F–67 DTC TABLE.)
		No	Troubleshooting completed.

F

DTC P0011

A6E397001084W02

DTC P0011	CMP - Timing over-advanced
DETECTION CONDITION	• Actual valve timing is over-advanced by **30 deg.** from target valve timing when the OCV is controlled in the maximum valve timing retard condition. **Diagnostic support note** • This is a continuous monitor (CCM). • MIL illuminates if PCM detects the above malfunction condition during first drive cycles. • PENDING CODE is available if PCM detects the above malfunction condition. • FREEZE FRAME DATA is available. • DTC is stored in PCM memory.
POSSIBLE CAUSE	• OCV malfunction • Spool valve in OCV is stuck in advance position. • Variable valve timing actuator is stuck in advance position. • Loose timing belt or improper valve timing due to timing belt slippage • PCM malfunction

Diagnostic procedure

STEP	INSPECTION		ACTION
1	**PERFORM DTC CONFIRMATION PROCEDURE** • Perform DTC CONFIRMATION PROCEDURE. (See F–66 DTC CONFIRMATION PROCEDURE.) • Is same DTC present?	Yes	Go to next step.
		No	Intermittent concern exists. Go to INTERMITTENT CONCERN TROUBLESHOOTING procedure. (See F–227 INTERMITTENT CONCERN TROUBLESHOOTING.)
2	**INSPECT OCV FOR MALFUNCTION** • Start engine. • Increase engine speed. • Stop engine. • Remove the OCV. • Inspect the position of spool valve in OCV. • Is spool valve located at valve retard position?	Yes	Go to next step.
		No	Replace OCV, then go to Step 5.
3	**INSPECT STOPPER PIN MECHANISM** • Remove timing belt. • Inspect stopper pin. (See B–32 VARIABLE VALVE TIMING ACTUATOR INSPECTION.) • Is stopper pin mechanism okay?	Yes	Go to next step.
		No	Replace variable valve timing actuator, then go to Step 5.
4	**INSPECT ROTOR POSITION** • Remove variable valve timing actuator. • Is rotor position at maximum valve timing retard?	Yes	**VARIABLE VALVE TIMING MECHANISM IS NORMAL** **Note** • This DTC detected by intermittent concern. • Intermittent concern might be removed by cleaning mode of variable valve timing control function. Go to next step.
		No	Replace variable valve timing actuator, go to next step.
5	**VERIFY TROUBLESHOOTING OF DTC P0011 COMPLETED** • Make sure to reconnect all disconnected connectors. • Clear DTC from PCM memory using WDS or equivalent. • Perform KOER self-test. (See F–66 KOEO/KOER SELF-TEST.) • Is same DTC present?	Yes	Replace PCM, then go to next step. (See F–43 PCM REMOVAL/INSTALLATION.)
		No	Go to next step.
6	**VERIFY AFTER REPAIR PROCEDURE** • Perform “After Repair Procedure”. (See F–66 AFTER REPAIR PROCEDURE.) • Is there any DTC present?	Yes	Go to applicable DTC troubleshooting. (See F–67 DTC TABLE.)
		No	Troubleshooting completed.

DTC P0012

A6E397001084W03

DTC P0012	CMP - Timing over-retarded
DETECTION CONDITION	• Actual valve timing is over-retarded by **5 deg.** from target valve timing for **5 s** when the OCV system control is within feed-back range. **Diagnostic support note** • This is a continuous monitor (CCM). • MIL illuminates if PCM detects the above malfunction condition during first drive cycles. • PENDING CODE is available if PCM detects the above malfunction condition. • FREEZE FRAME DATA is available. • DTC is stored in PCM memory.
POSSIBLE CAUSE	• OCV (oil control valve) malfunction • Low engine oil pressure • Spool valve in OCV (oil control valve) is stuck in retard position. • Vriable valve timing actuator is stuck in retard position. • Following oil runners are clogged or have leakage. **Oil runners** • Between oil pressure switch and OCV (oil control valve) • Between OCV (oil control valve) and variable valve timing actuator • In variable valve timing actuator • Loose timing belt or improper valve timing due to timing belt slippage • PCM malfunction

F

Diagnostic procedure

STEP	INSPECTION		ACTION
1	**PERFORM DTC CONFIRMATION PROCEDURE** • Perform DTC CONFIRMATION PROCEDURE. (See F–66 DTC CONFIRMATION PROCEDURE.) • Is same DTC present?	Yes	Go to next step.
		No	Intermittent concern exists. Go to INTERMITTENT CONCERN TROUBLESHOOTING procedure. (See F–227 INTERMITTENT CONCERN TROUBLESHOOTING.)
2	**VERIFY RELATED PENDING CODE OR STORED DTCS** • Is DTC P0010 present?	Yes	Go to DTC P0010 troubleshooting procedure. (See F–70 DTC P0010)
		No	Go to next step.
3	**VERIFY ENGINE OIL PRESSURE** • Start engine. • Does oil pressure warning light illuminate?	Yes	Inspect engine oil pressure. (See D–3 OIL PRESSURE INSPECTION)
		No	Go to next step.
4	**VERIFY TIMING BELT INSTALLATION** • Stop engine. • Remove timing belt cover. • Is camshaft timing mark at correct point? (See B–10 TIMING CHAIN REMOVAL/ INSTALLATION.)	Yes	Go to next step.
		No	Reinstall timing belt, then go to Step 7.
5	**INSPECT OCV FOR MALFUNCTION** • Stop engine. • Remove OCV. • Inspect position of spool valve in OCV. • Is spool valve located at valve retard position?	Yes	**VARIABLE VALVE TIMING MECHANISM IS NORMAL** **Note** • This DTC detected by intermittent concern. • Intermittent concern might be removed by cleaning mode of variable valve timing control function. Go to next step.
		No	Replace OCV, then go to Step 7.
6	**INSPECT ENGINE OIL RUNNER** • Inspect following engine oil runners for clogging or leakage. — Beetween oil pressure switch and OCV — Between OCV and variable valve timing actuator — In variable valve timing actuator • Is there any clogging or leakage?	Yes	Repair or replace suspected runner, then go to next step.
		No	**VARIABLE VALVE TIMING MECHANISM IS NORMAL** **Note** • This DTC is detected by intermittent concern. • Intermittent concern might be removed by cleaning mode of variable valve timing control function. Go to next step.

STEP	INSPECTION		ACTION
7	**VERIFY TROUBLESHOOTING OF DTC P0012 COMPLETED** • Make sure to reconnect all disconnected connectors. • Clear DTC from PCM memory using WDS or equivalent. • Perform KOER self-test. (See F–66 KOEO/KOER SELF-TEST.) • Is same DTC present?	Yes	Replace PCM, then go to next step. (See F–43 PCM REMOVAL/INSTALLATION.)
		No	Go to next step.
8	**VERIFY AFTER REPAIR PROCEDURE** • Perform “After Repair Procedure”. (See F–66 AFTER REPAIR PROCEDURE.) • Is there any DTC present?	Yes	Go to applicable DTC troubleshooting. (See F–67 DTC TABLE.)
		No	Troubleshooting completed.

DTC P0031

A6E397001084W04

DTC P0031	Front HO2S heater circuit low input
DETECTION CONDITION	• PCM monitors front HO2S heater control signal at PCM terminal 4A. If PCM turns front HO2S heater off but front HO2S heater circuit has low voltage, PCM determines that front HO2S heater circuit has malfunction. **Note** • Front HO2S heater is controlled by duty signal. **Diagnostic support note** • This is a continuous monitor (O_2 sensor heater). • MIL illuminates if PCM detects above malfunction condition in two consecutive drive cycles or in one drive cycle while DTC for the same malfunction has been stored in PCM. • PENDING CODE is available if PCM detects above malfunction condition during first drive cycle. • FREEZE FRAME DATA is available. • DTC is stored in PCM memory.
POSSIBLE CAUSE	• Front HO2S malfunction • Open circuit between ignition switch and front HO2S terminal C • Open circuit between front HO2S terminal D and PCM terminal 4A • Short to ground circuit between front HO2S terminal D and PCM terminal 4A • Poor connection at front HO2S or PCM connector • PCM malfunction

DTC P0031	Front HO2S heater circuit low input

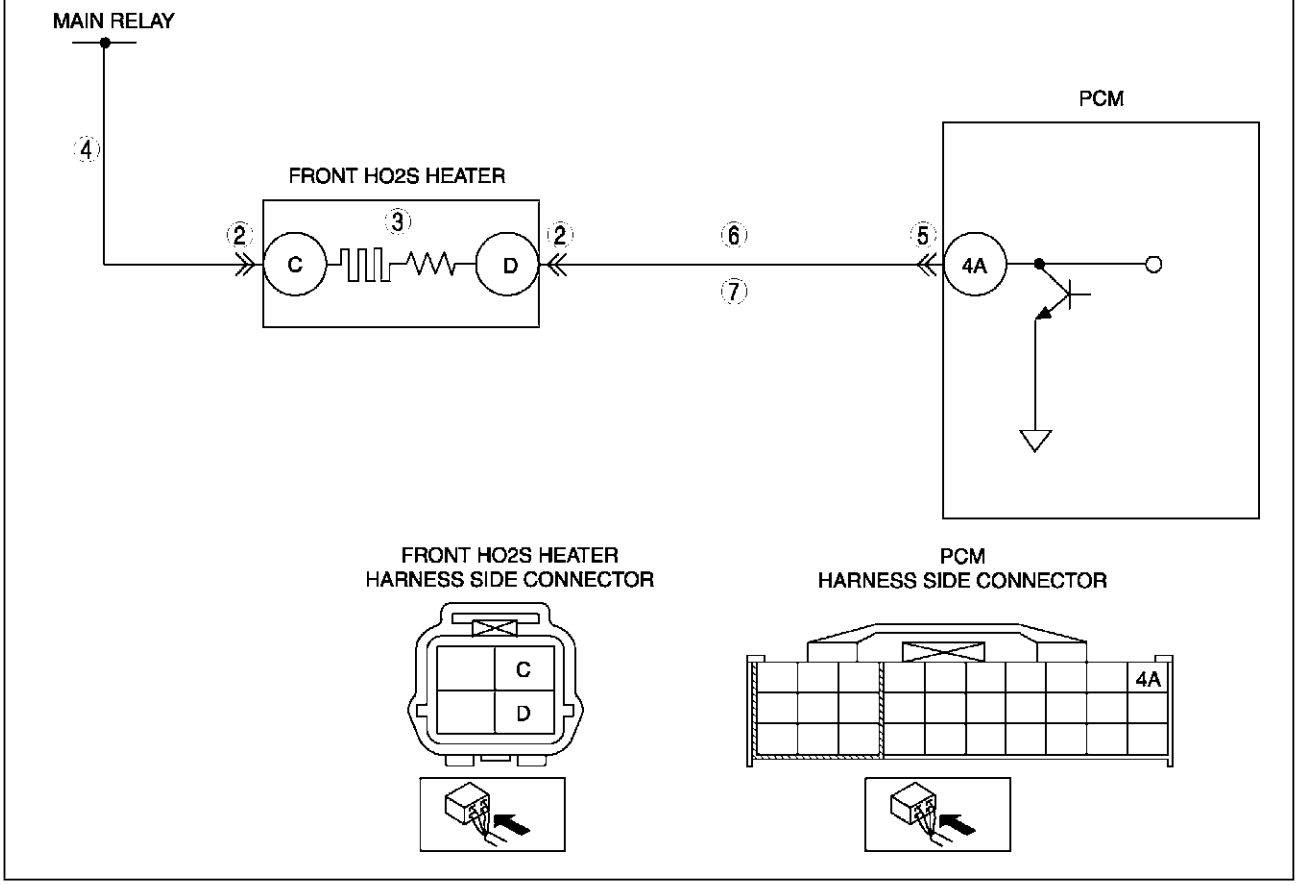

Diagnostic procedure

STEP	INSPECTION		ACTION
1	**PERFORM DTC CONFIRMATION PROCEDURE** • Perform DTC CONFIRMATION PROCEDURE. (See F–66 DTC CONFIRMATION PROCEDURE.) • Is same DTC present?	Yes	Go to next step.
		No	Intermittent concern exists. Go to INTERMITTENT CONCERN TROUBLESHOOTING procedure. (See F–227 INTERMITTENT CONCERN TROUBLESHOOTING.)
2	**INSPECT POOR CONNECTION OF FRONT HO2S CONNECTOR** • Turn ignition key to OFF. • Disconnect front HO2S connector. • Inspect for poor connection (damaged, pulled-out pins, corrosion, etc.). • Are there any malfunctions?	Yes	Repair or replace terminal, then go to Step 8.
		No	Go to next step.
3	**INSPECT FRONT HO2S HEATER** • Inspect front HO2S heater. (See F–56 HEATED OXYGEN SENSOR (HO2S) INSPECTION.) • Is front HO2S heater okay?	Yes	Go to next step.
		No	Replace front HO2S, then go to Step 8.
4	**INSPECT POWER CIRCUIT OF FRONT HO2S HEATER FOR OPEN CIRCUIT** • Turn ignition key to ON (Engine OFF). • Measure voltage between front HO2S terminal C (harness-side) and body ground. • Is voltage **B+**?	Yes	Go to next step.
		No	Repair or replace harness for open circuit, then go to Step 8.
5	**INSPECT POOR CONNECTION OF PCM CONNECTOR** • Turn ignition key to OFF. • Disconnect PCM connector. • Inspect for poor connection (damaged, pulled-out pins, corrosion, etc.). • Are there any malfunctions?	Yes	Repair terminal, then go to Step 8.
		No	Go to next step.

STEP	INSPECTION		ACTION
6	**INSPECT CONTROL CIRCUIT OF FRONT HO2S HEATER FOR SHORT TO GROUND** • Inspect continuity between front HO2S terminal D (harness-side) and body ground. • Is there continuity?	Yes	Repair or replace harness for short to ground, then go to Step 8.
		No	Go to next step.
7	**INSPECT CONTROL CIRCUIT OF FRONT HO2S HEATER FOR OPEN CIRCUIT** • Remove PCM with PCM connector connected. • Inspect continuity between front HO2S terminal D (harness-side) and PCM terminal 4A. • Is there continuity?	Yes	Go to next step.
		No	Repair or replace harness for open circuit, then go to Step 8.
8	**VERIFY TROUBLESHOOTING OF DTC P0031 COMPLETED** • Make sure to reconnect all disconnected connectors. • Clear DTC from PCM memory using WDS or equivalent. • Perform KOEO/KOER self-test. (See F–66 KOEO/KOER SELF-TEST.) • Is same DTC present?	Yes	Replace PCM, then go to next step. (See F–43 PCM REMOVAL/INSTALLATION.)
		No	Go to next step.
9	**VERIFY AFTER REPAIR PROCEDURE** • Perform “After Repair Procedure”. (See F–66 AFTER REPAIR PROCEDURE.) • Is there any DTC present?	Yes	Go to applicable DTC troubleshooting. (See F–67 DTC TABLE.)
		No	Troubleshooting completed.

DTC P0032

A6E397001084W05

DTC P0032	Front HO2S heater circuit high input
DETECTION CONDITION	• PCM monitors front HO2S heater control signal at PCM terminal 4A. If PCM turns front HO2S heater on but front HO2S heater circuit has high voltage, PCM determines that front HO2S heater circuit has malfunction. **Note** • Front HO2S heater is controlled by a duty signal. **Diagnostic support note** • This is a continuous monitor (O_2 sensor heater). • MIL illuminates if PCM detects the above malfunction condition in two consecutive drive cycles or in one drive cycle while the DTC for the same malfunction has been stored in the PCM. • PENDING CODE is available if PCM detects the above malfunction condition. • FREEZE FRAME DATA is available. • DTC is stored in PCM memory.
POSSIBLE CAUSE	• Short to power circuit between front HO2S terminal D and PCM terminal 4A • Front HO2S or PCM terminal is shorted • Front HO2S heater malfunction • PCM malfunction

DTC P0032	Front HO2S heater circuit high input

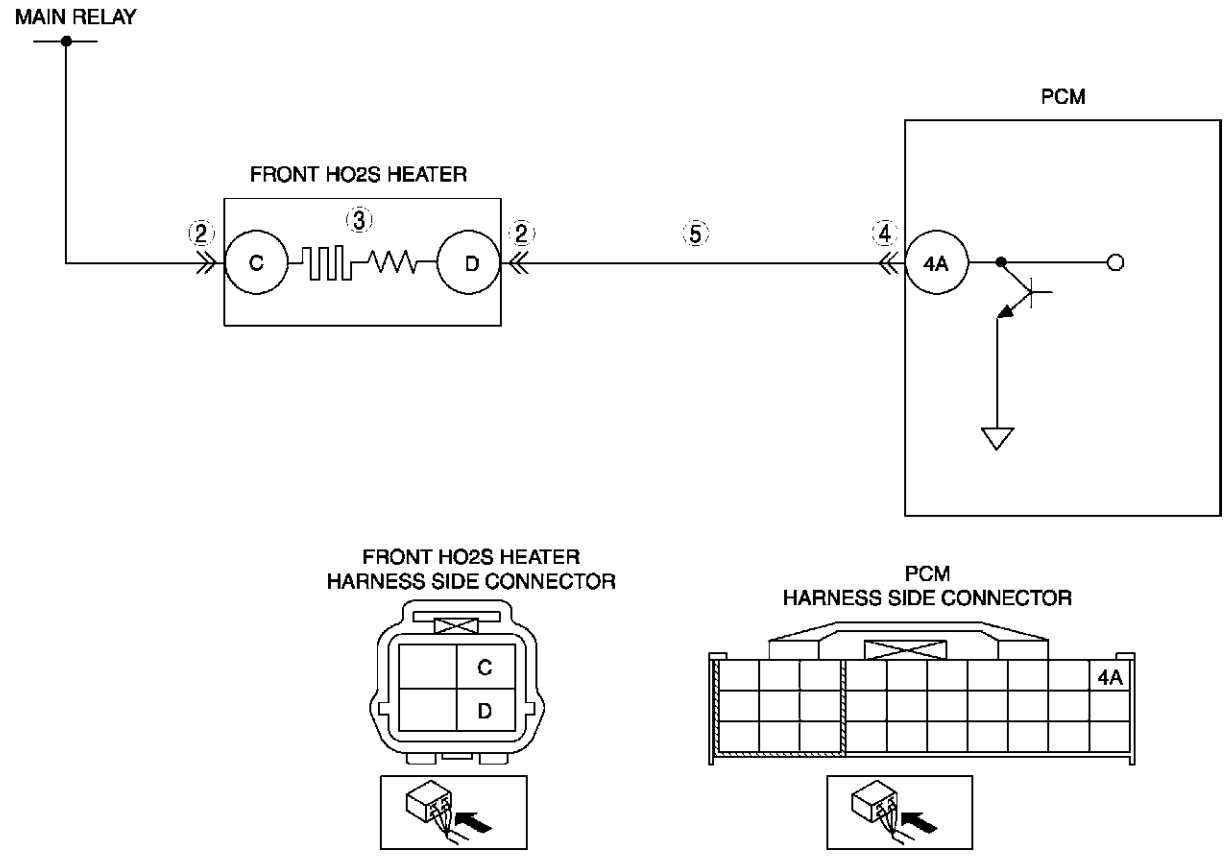

F

Diagnostic procedure

STEP	INSPECTION		ACTION
1	**PERFORM DTC CONFIRMATION PROCEDURE** • Perform DTC CONFIRMATION PROCEDURE. (See F–66 DTC CONFIRMATION PROCEDURE.) • Is same DTC present?	Yes	Go to next step.
		No	Intermittent concern exists. Go to INTERMITTENT CONCERN TROUBLESHOOTING procedure. (See F–227 INTERMITTENT CONCERN TROUBLESHOOTING.)
2	**INSPECT FRONT HO2S TERMINALS** • Turn ignition key to OFF. • Disconnect front HO2S connector. • Inspect for bent terminals. • Is there any malfunction?	Yes	Repair or replace terminal, then go to Step 6.
		No	Go to next step.
3	**INSPECT FRONT HO2S HEATER** • Inspect front HO2S heater. (See F–56 HEATED OXYGEN SENSOR (HO2S) INSPECTION.) • Is front HO2S heater okay?	Yes	Go to next step.
		No	Replace the front HO2S, then go to Step 6.
4	**INSPECT PCM TERMINAL** • Disconnect PCM connector. • Inspect for bent terminals. • Are there any malfunctions?	Yes	Repair terminal, then go to Step 6.
		No	Go to next step.
5	**INSPECT FRONT HO2S HEATER CONTROL CIRCUIT FOR SHORT TO POWER CIRCUIT** • Turn ignition key to ON (Engine OFF). • Measure voltage between front HO2S terminal D (harness-side) and body ground. • Is there voltage **B+**?	Yes	Repair or replace harness for shot to power circuit, then go to next step.
		No	Go to next step.

STEP	INSPECTION		ACTION
6	**VERIFY TROUBLESHOOTING OF DTC P0032 COMPLETED** • Make sure to reconnect all disconnected connectors. • Clear DTC from PCM memory using WDS or equivalent. • Perform KOEO/KOER self-test. (See F–66 KOEO/KOER SELF-TEST.) • Is same DTC present?	Yes	Replace PCM, then go to next step. (See F–43 PCM REMOVAL/INSTALLATION.)
		No	Go to next step.
7	**VERIFY AFTER REPAIR PROCEDURE** • Perform “After Repair Procedure”. (See F–66 AFTER REPAIR PROCEDURE.) • Is there any DTC present?	Yes	Go to applicable DTC troubleshooting. (See F–67 DTC TABLE.)
		No	Troubleshooting completed.

DTC P0037

A6E397001084W06

DTC P0037	Rear HO2S heater circuit low input
DETECTION CONDITION	• PCM monitors rear HO2S heater control signal at PCM terminal 4D. If PCM turns rear HO2S heater off but rear HO2S heater circuit has low voltage, PCM determines that rear HO2S heater circuit has malfunction. **Diagnostic support note** • This is a continuous monitor (O_2 sensor heater). • MIL illuminates if PCM detects the above malfunction condition in two consecutive drive cycles or in one drive cycle while DTC for the same malfunction has been stored in PCM. • PENDING CODE is available if PCM detects the above malfunction condition during first drive cycle. • FREEZE FRAME DATA is available. • DTC is stored in PCM memory.
POSSIBLE CAUSE	• Rear HO2S malfunction • Open circuit between the ignition switch and rear HO2S terminal C • Open circuit between the rear HO2S terminal D and PCM terminal 4D • Short to ground circuit between rear HO2S terminal D and PCM terminal 4D • Poor connection at rear HO2S or PCM connector • PCM malfunction

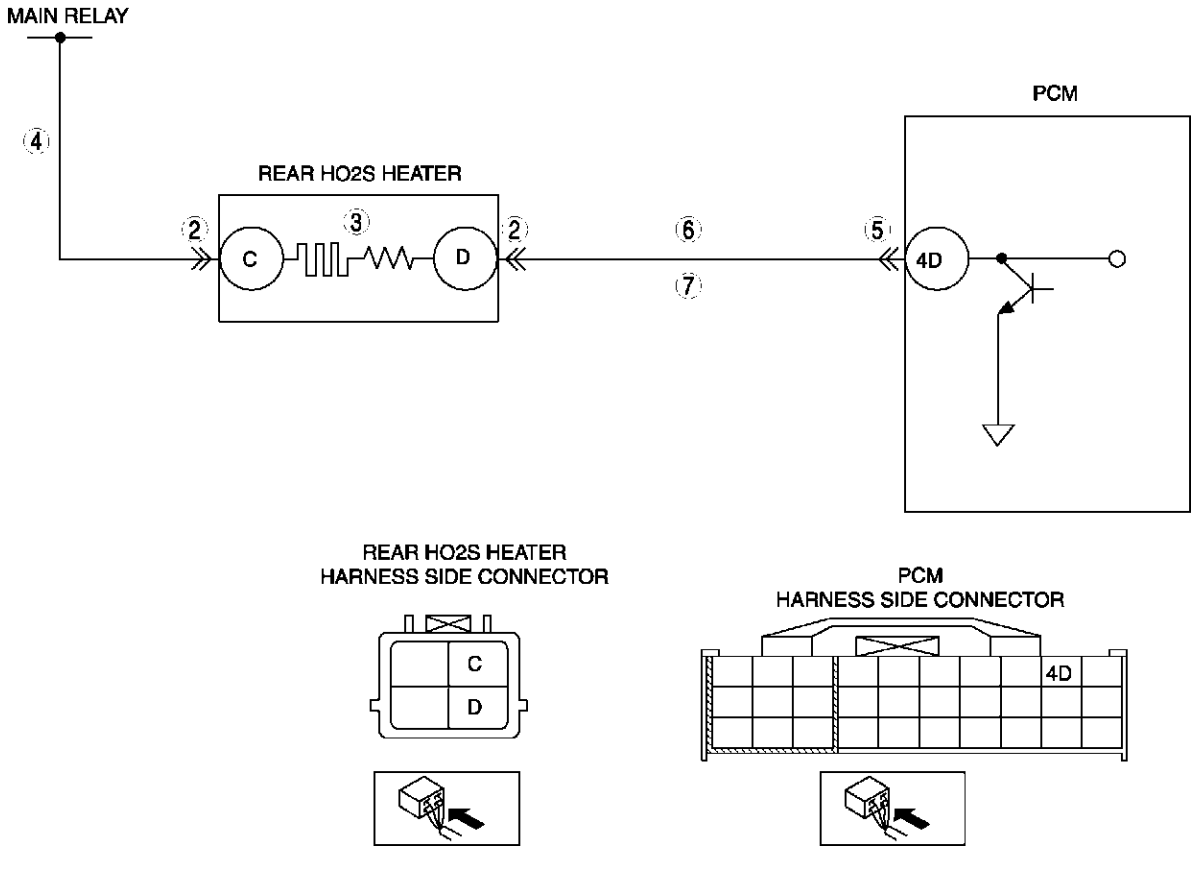

Diagnostic procedure

STEP	INSPECTION		ACTION
1	**PERFORM DTC CONFIRMATION PROCEDURE** • Perform DTC CONFIRMATION PROCEDURE. (See F–66 DTC CONFIRMATION PROCEDURE.) • Is same DTC present?	Yes	Go to next step.
		No	Intermittent concern exists. Go to INTERMITTENT CONCERN TROUBLESHOOTING procedure. (See F–227 INTERMITTENT CONCERN TROUBLESHOOTING.)
2	**INSPECT POOR CONNECTION OF REAR HO2S CONNECTOR** • Turn ignition key to OFF. • Disconnect rear HO2S connector. • Inspect for poor connection (damaged, pulled-out pins, corrosion, etc.). • Are there any malfunctions?	Yes	Repair or replace terminal, then go to Step 8.
		No	Go to next step.
3	**INSPECT REAR HO2S HEATER** • Inspect rear HO2S heater. (See F–56 HEATED OXYGEN SENSOR (HO2S) INSPECTION.) • Is rear HO2S heater okay?	Yes	Go to next step.
		No	Replace rear HO2S, then go to Step 8.
4	**INSPECT REAR HO2S HEATER POWER CIRCUIT FOR OPEN CIRCUIT** • Turn ignition key to ON (Engine OFF). • Measure voltage between rear HO2S terminal C (harness-side) and body ground. • Is there voltage **B+**?	Yes	Go to next step.
		No	Repair or replace harness for open circuit, then go to Step 8.
5	**INSPECT POOR CONNECTION OF PCM CONNECTOR** • Turn ignition key to OFF. • Disconnect PCM connector. • Inspect for poor connection (damaged, pulled-out pins, corrosion, etc.). • Are there any malfunctions?	Yes	Repair terminal, then go to Step 8.
		No	Go to next step.
6	**INSPECT REAR HO2S HEATER CONTROL CIRCUIT FOR SHORT TO GROUND** • Inspect continuity between rear HO2S terminal D (harness-side) and body ground. • Is there any continuity?	Yes	Repair or replace harness for short to ground, then go to Step 8.
		No	Go to next step.
7	**INSPECT HREAR HO2S HEATER CONTROL CIRCUIT FOR OPEN CIRCUIT** • Remove PCM with PCM connector connected. • Inspect continuity between rear HO2S terminal D (harness-side) and PCM terminal 4D. • Is there any continuity?	Yes	Go to next step.
		No	Repair or replace harness for open circuit, then go to Step 8.
8	**VERIFY TROUBLESHOOTING OF DTC P0037 COMPLETED** • Make sure to reconnect all disconnected connectors. • Clear DTC from PCM memory using WDS or equivalent. • Perform KOEO/KOER self-test. (See F–66 KOEO/KOER SELF-TEST.) • Is same DTC present?	Yes	Replace PCM, then go to next step. (See F–43 PCM REMOVAL/INSTALLATION.)
		No	Go to next step.
9	**VERIFY AFTER REPAIR PROCEDURE** • Perform “After Repair Procedure”. (See F–66 AFTER REPAIR PROCEDURE.) • Is there any DTC present?	Yes	Go to applicable DTC troubleshooting. (See F–67 DTC TABLE.)
		No	Troubleshooting completed.

F

DTC P0038

A6E397001084W07

DTC P0038	Rear HO2S heater circuit high input
DETECTION CONDITION	• PCM monitors rear HO2S heater control signal at PCM terminal 4D. If PCM turns rear HO2S heater on but rear HO2S heater circuit has high voltage, PCM determines that rear HO2S heater circuit has malfunction. **Diagnostic support note** • This is a continuous monitor (O_2 sensor heater). • MIL illuminates if PCM detects the above malfunction condition in two consecutive drive cycles or in one drive cycle while the DTC for the same malfunction has been stored in the PCM. • PENDING CODE is available if PCM detects the above malfunction condition during first drive cycle. • FREEZE FRAME DATA is available. • DTC is stored in PCM memory.
POSSIBLE CAUSE	• Short to power circuit between rear HO2S terminal D and PCM terminal 4D • Rear HO2S or PCM terminal is shorted • Rear HO2S heater malfunction • PCM malfunction

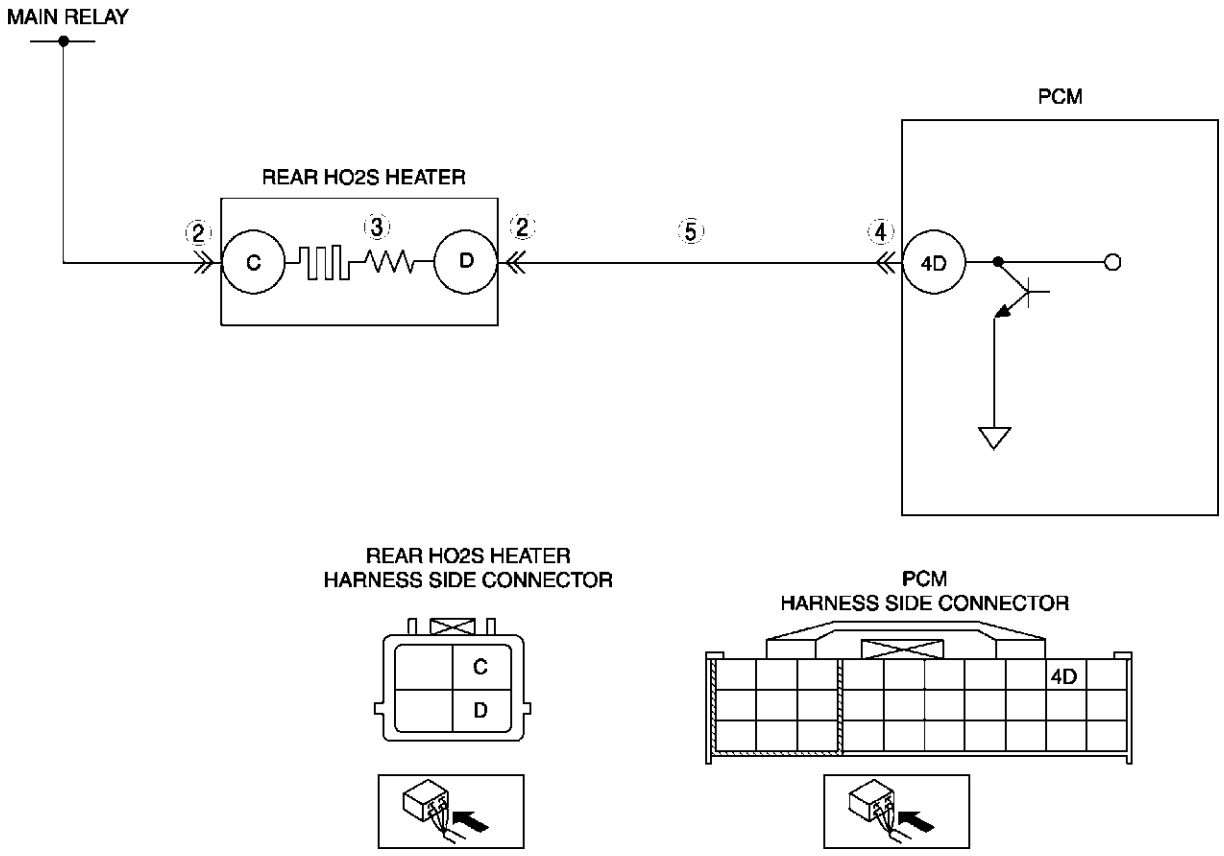

Diagnostic procedure

STEP	INSPECTION		ACTION
1	**PERFORM DTC CONFIRMATION PROCEDURE** • Perform DTC CONFIRMATION PROCEDURE. (See F–66 DTC CONFIRMATION PROCEDURE.) • Is same DTC present?	Yes	Go to next step.
		No	Intermittent concern exists. Go to INTERMITTENT CONCERN TROUBLESHOOTING procedure. (See F–227 INTERMITTENT CONCERN TROUBLESHOOTING.)
2	**INSPECT REAR HO2S TERMINAL** • Turn ignition key to OFF. • Disconnect rear HO2S connector. • Inspect for bent terminals • Is there any malfunction?	Yes	Repair or replace terminal, then go to Step 6.
		No	Go to next step.
3	**INSPECT REAR HO2S HEATER** • Inspect rear HO2S heater. (See F–56 HEATED OXYGEN SENSOR (HO2S) INSPECTION.) • Is rear HO2S heater okay?	Yes	Go to next step.
		No	Replace the rear HO2S, then go to Step 6.

STEP	INSPECTION		ACTION
4	**INSPECT PCM TERMINAL** • Disconnect PCM connector. • Inspect for bent terminals. • Is there any malfunctions?	Yes	Repair terminal, then go to Step 6.
		No	Go to next step.
5	**INSPECT REAR HO2S HEATER CONTROL CIRCUIT FOR SHORT TO POWER** • Turn ignition key to ON (Engine OFF). • Measure voltage between rear HO2S terminal D (harness-side) and body ground. • Is there voltage **B+**?	Yes	Repair or replace harness for shot to power circuit, then go to next step.
		No	Go to next step.
6	**VERIFY TROUBLESHOOTING OF DTC P0038 COMPLETED** • Make sure to reconnect all disconnected connectors. • Clear DTC from PCM memory using WDS or equivalent. • Perform KOEO/KOER self-test. (See F–66 KOEO/KOER SELF-TEST.) • Is same DTC present?	Yes	Replace PCM, then go to next step. (See F–43 PCM REMOVAL/INSTALLATION.)
		No	Go to next step.
7	**VERIFY AFTER REPAIR PROCEDURE** • Perform “After Repair Procedure”. (See F–66 AFTER REPAIR PROCEDURE.) • Is there any DTC present?	Yes	Go to applicable DTC troubleshooting. (See F–67 DTC TABLE.)
		No	Troubleshooting completed.

F

DTC P0101

A6E397001084W08

DTC P0101	**MAF sensor inconsistent with TP sensor (lower than expected) or engine speed (greater than expected)**
DETECTION CONDITION	• The PCM compares actual input signal from MAF sensor with expected input signal from MAF sensor (calculated by input voltage from throttle position sensor or engine speed). — If mass intake air flow amount is **below 5.0 g/sec. {0.66 lb/min.}** for **5 s** and throttle opening angle is **above 50%** with engine running, the PCM determines that detected mass intake air flow amount is too low. — If mass intake air flow amount is **above 96.0 g/sec. {12.7 lb/min.}** for **5 s** and engine speed is **below 2,000 rpm** with engine running, the PCM determines that detected mass intake air flow amount is too high. **Diagnostic support note** • This is a continuous monitor (CCM). • MIL illuminates if PCM detects the above malfunction condition in two consecutive drive cycles or in one drive cycle while the DTC for the same malfunction has been stored in the PCM. • PENDING CODE is available if PCM detects the above malfunction condition during first drive cycle. • FREEZE FRAME DATA is available. • DTC is stored in the PCM memory.
POSSIBLE CAUSE	• MAF sensor malfunction • TP sensor malfunction • Electrical corrosion in MAF signal circuit • Electrical corrosion in MAF RETURN circuit • Voltage drops in MAF signal circuit • Voltage drops in ground circuit

Diagnostic procedure

STEP	INSPECTION		ACTION
1	**VERIFY FREEZE FRAME DATA HAS BEEN RECORDED** • Has FREEZE FRAME DATA been recorded?	Yes	Go to next step.
		No	Record FREEZE FRAME DATA on repair order, then go to next step.
2	**VERIFY RELATED SERVICE INFORMATION AVAILABILITY** • Check for related Service Information availability. • Is any related Service Information available?	Yes	Perform repair or diagnosis according to available Service Information. • If vehicle is not repaired, go to next step.
		No	Go to next step.

STEP	INSPECTION		ACTION
3	**VERIFY CURRENT INPUT SIGNAL STATUS-IS CONCERN INTERMITTENT OR CONSTANT** • Connect WDS or equivalent to DLC-2. • Start the engine. • Access ECT, TP and MAF PIDs. • Warm up the engine until ECT PID is **above 80 °C {176 °F}**. • Drive the vehicle. • Read MAF PID while TP PID is **above 50%**. • Is MAF PID reading **below 4.8 g/s {0.63 lb/ min.}**?	Yes	Make sure that throttle position sensor resistance changes smoothly while gradually opening throttle valve. • If not, replace throttle position sensor and go to Step 7. • For others, go to next step.
		No	Go to next step.
4	**VERIFY CURRENT INPUT SIGNAL STATUS-IS CONCERN INTERMITTENT OR CONSTANT** • Connect WDS or equivalent to DLC-2. • Start the engine. • Access ECT, MAF and RPM PIDs. • Warm up engine until ECT PID is **above 80°C {176 °F}**. • Read MAF PID while RPM PID is **below 1,000 rpm**. • Is MAF PID reading above **66.5 g/s {8.8 lb/ min.}**?	Yes	Go to Step 8.
		No	Intermittent concern exists. Go to INTERMITTENT CONCERNS TROUBLESHOOTING procedure. (See F–227 INTERMITTENT CONCERN TROUBLESHOOTING.)
5	**INSPECT POOR CONNECTION OF MAF SENSOR CONNECTOR** • Turn ignition key to OFF. • Disconnect MAF/IAT sensor connector. • Inspect for poor connection (damaged, pulled-out terminals, corrosion, etc.). • Is there any malfunction?	Yes	Repair or replace suspected terminal or MAF/IAT sensor, then go to Step 7.
		No	Go to next step.
6	**INSPECT POOR CONNECTION OF PCM CONNECTOR** • Disconnect PCM connector. • Inspect for poor connection (damaged/pulled-out pins, corrosion, etc.). • Is there any malfunction?	Yes	Repair terminal, then go to next step.
		No	Replace MAF/IAT sensor, then go to next step.
7	**VERIFY TROUBLESHOOTING OF DTC P0101 COMPLETED** • Make sure to reconnect all disconnected connectors. • Turn ignition key to ON (Engine OFF). • Clear DTC from memory using WDS or equivalent. • Start the engine. • Access ECT, TP and RPM PIDs. • Warm up the engine until ECT PID is reading **above 80°C {176°F}**. • Drive the vehicle while TP PID **above 50%** for **50 s**. • Is same DTC present?	Yes	Replace PCM, then go to Step 11.
		No	Go to Step 11.
8	**INSPECT MAF SENSOR TERMINALS FOR ELECTRICAL CORROSION** • Turn ignition key to OFF. • Disconnect MAF/IAT sensor connector. • Inspect for poor connection (damaged, pulled-out terminals, corrosion, etc.). • Is any problem corrosion found?	Yes	Repair or replace suspected terminal or MAF/IAT sensor, then go to Step 10.
		No	Go to next step.
9	**INSPECT POOR CONNECTION OF PCM CONNECTOR** • Disconnect PCM connector. • Inspect for poor connection (damaged, pulled-out pins, corrosion, etc.). • Is there any malfunction?	Yes	Repair terminal, then go to next step.
		No	Go to next step.

STEP	INSPECTION		ACTION
10	**VERIFY TROUBLESHOOTING OF DTC P0101 COMPLETED** • Make sure to reconnect all disconnected connectors. • Turn ignition key to ON (Engine OFF). • Clear DTC from memory using WDS or equivalent. • Start the engine. • Warm up engine until ECT PID is **above 80 °C {176 °F}**. • Drive the vehicle while RPM PID **2,000 rpm** for **50 s**. • Is pending code the same as DTC present?	Yes	Replace PCM, then go to next step. (See F–43 PCM REMOVAL/INSTALLATION.)
		No	Go to next step.
11	**VERIFY AFTER REPAIR PROCEDURE** • Is there any DTC present?	Yes	Go to applicable DTC troubleshooting. (See F–67 DTC TABLE.)
		No	Troubleshooting completed.

F

DTC P0102

A6E397001084W09

DTC P0102	MAF circuit low input
DETECTION CONDITION	• PCM monitors input voltage from MAF sensor when engine running. If input voltage at PCM terminal 1P is **below 0.21 V**, PCM determines that MAF circuit has malfunction. **Diagnostic support note** • This is a continuous monitor (CCM). • MIL illuminates if PCM detects the above malfunction condition during first drive cycle. • PENDING CODE is available if PCM detects the above malfunction condition. • FREEZE FRAME DATA is available. • DTC is stored in the PCM memory.
POSSIBLE CAUSE	• MAF sensor malfunction • Connector or terminal malfunction • Short to ground in wiring between MAF/IAT sensor terminal C and PCM terminal 1P • Open circuit in wiring between MAF/IAT sensor terminal C and PCM terminal 1P • Open circuit in wiring between main relay and MAF/IAT sensor terminal A

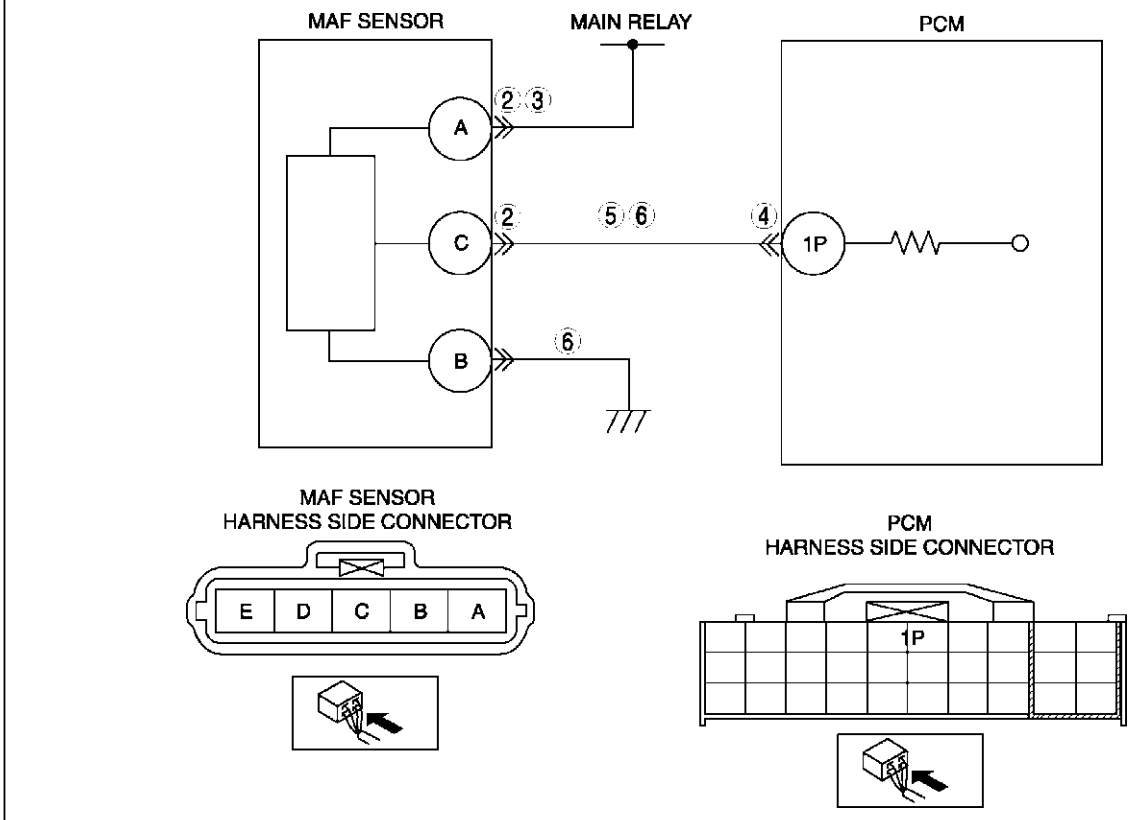

Diagnostic procedure

STEP	INSPECTION		ACTION
1	**PERFORM DTC CONFIRMATION PROCEDURE** • Perform DTC CONFIRMATION PROCEDURE. (See F–66 DTC CONFIRMATION PROCEDURE.) • Is same DTC present?	Yes	Go to next step.
		No	Intermittent concern exists. Go to INTERMITTENT CONCERN TROUBLESHOOTING procedure. (See F–227 INTERMITTENT CONCERN TROUBLESHOOTING.)
2	**INSPECT POOR CONNECTION OF MAF SENSOR CONNECTOR** • Turn ignition key to OFF. • Disconnect the MAF/IAT sensor connector. • Inspect for poor connection (damaged, pulled-out terminals, corrosion, etc.). • Is there any malfunction?	Yes	Repair or replace terminals, then go to Step 7.
		No	Go to next step.
3	**INSPECT POWER SUPPLY CIRCUIT FOR OPEN CIRCUIT** • Turn ignition key to ON (Engine OFF). • Inspect voltage at MAF/IAT sensor terminal B (harness-side). • Is there voltage **B+**?	Yes	Go to next step.
		No	Inspect for open circuit in wiring harness between MAF/IAT sensor terminal B (harness-side) and main relay. Repair or replace harness, then go to Step 7.
4	**INSPECT POOR CONNECTION OF PCM CONNECTOR** • Turn ignition key to OFF. • Disconnect PCM connector. • Inspect for poor connection (damaged, pulled-out terminals, corrosion, etc.). • Is there any malfunction?	Yes	Repair terminal, then go to Step 7.
		No	Go to next step.
5	**INSPECT MAF SENSOR SIGNAL CIRCUIT FOR OPEN CIRCUIT** • Remove PCM with PCM connector connected. • Inspect for continuity between MAF/IAT sensor terminal C (harness-side) and PCM terminal 1P (harness-side). • Is there any continuity?	Yes	Go to next step.
		No	Repair or replace suspected harness, then go to Step 7.
6	**INSPECT MAF SENSOR SIGNAL CIRCUIT FOR SHORTS** • Inspect continuity between following circuits: — MAF/IAT sensor terminal C (harness-side) and body ground — MAF/IAT sensor connector terminal C (harness-side) and B (harness-side) • Are there any continuity?	Yes	Repair or replace suspected harness, then go to next step.
		No	Replace MAF/IAT sensor, then go to next step.
7	**VERIFY TROUBLESHOOTING OF DTC P0102 COMPLETED** • Make sure to reconnect all disconnected connectors. • Clear DTC from memory using WDS or equivalent. • Perform KOEO/KOER self-test. (See F–66 KOEO/KOER SELF-TEST.) • Is same DTC present?	Yes	Replace PCM, then go to next step. (See F–43 PCM REMOVAL/INSTALLATION.)
		No	Go to next step.
8	**VERIFY AFTER REPAIR PROCEDURE** • Perform “After Repair Procedure”. (See F–66 AFTER REPAIR PROCEDURE.) • Is there any DTC present?	Yes	Go to applicable DTC troubleshooting. (See F–67 DTC TABLE.)
		No	Troubleshooting completed.

DTC P0103

A6E397001084W10

DTC P0103	MAF circuit high input
DETECTION CONDITION	• PCM monitors input voltage from MAF sensor when engine running. If input voltage at PCM terminal 1P is **above 4.9 V**, PCM determines that MAF circuit has malfunction. **Diagnostic support note** • This is a continuous monitor (CCM). • MIL illuminates if PCM detects the above malfunction condition during first drive cycle. • PENDING CODE is available if PCM detects the above malfunction condition. • FREEZE FRAME DATA is available. • DTC is stored in the PCM memory.
POSSIBLE CAUSE	• MAF sensor malfunction • Connector or terminal malfunction • Short to power in wiring between MAF/IAT sensor terminal C and PCM terminal 1P. • Open circuit in MAF/IAT sensor ground circuit

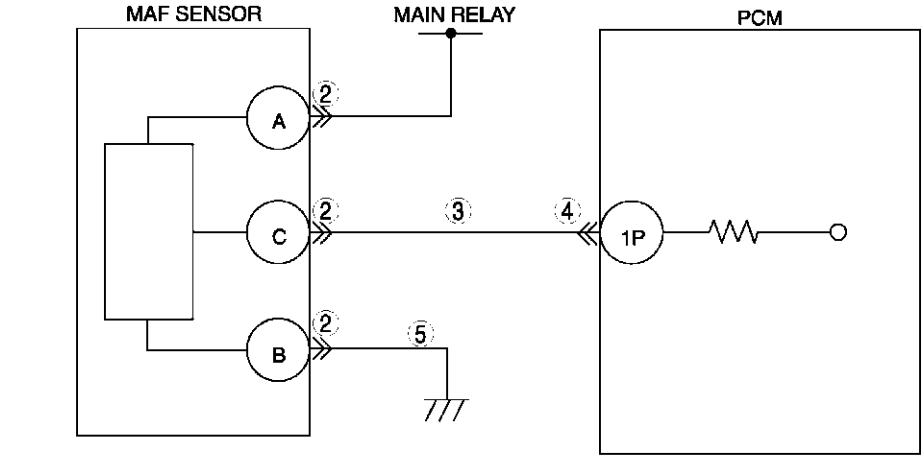

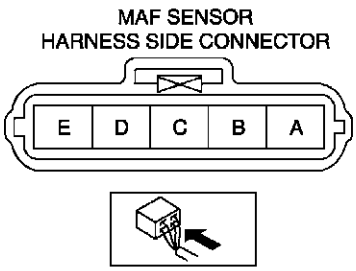

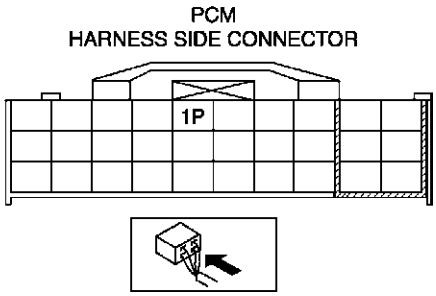

Diagnostic procedure

STEP	INSPECTION		ACTION
1	**PERFORM DTC CONFIRMATION PROCEDURE** • Perform DTC CONFIRMATION PROCEDURE. (See F–66 DTC CONFIRMATION PROCEDURE.) • Is same DTC present?	Yes	Go to next step.
		No	Intermittent concern exists. Go to INTERMITTENT CONCERN TROUBLESHOOTING procedure. (See F–227 INTERMITTENT CONCERN TROUBLESHOOTING.)
2	**INSPECT POOR CONNECTION OF MAF SENSOR CONNECTOR** • Turn ignition key to OFF. • Disconnect the MAF/IAT sensor connector. • Inspect for poor connection (damaged, pulled-out terminals, corrosion, etc.). • Is there any malfunction?	Yes	Repair or replace terminals, then go to Step 6.
		No	Go to next step.

STEP	INSPECTION		ACTION
3	**INSPECT MAF SIGNAL CIRCUIT FOR SHORT TO POWER CIRCUIT** • Turn ignition key to ON (Engine OFF). • Measure voltage between MAF/IAT sensor terminal C (harness-side) and body ground. • Is there voltage **0 V**?	Yes	Go to next step.
		No	Repair or replace suspected harness, then go to Step 6.
4	**INSPECT POOR CONNECTION OF PCM CONNECTOR** • Turn ignition key to OFF. • Disconnect PCM connector. • Inspect for poor connection (damaged, pulled-out terminals, corrosion, etc.). • Is there any malfunction?	Yes	Repair terminal, then go to Step 6.
		No	Go to next step.
5	**INSPECT MAF SENSOR GROUND CIRCUIT FOR OPEN CIRCUIT** • Remove PCM with PCM connector connected. • Inspect for continuity between MAF/IAT sensor terminal B (harness-side) and GND. • Is there any continuity?	Yes	Replace MAF/IAT sensor, then go to next step.
		No	Repair or replace suspected harness, then go to next step.
6	**VERIFY TROUBLESHOOTING OF DTC P0103 COMPLETED** • Make sure to reconnect all disconnected connectors. • Clear DTC from memory using WDS or equivalent. • Perform KOEO/KOER self-test. (See F–66 KOEO/KOER SELF-TEST.) • Is same DTC present?	Yes	Replace PCM, then go to next step. (See F–43 PCM REMOVAL/INSTALLATION.)
		No	Go to next step.
7	**VERIFY AFTER REPAIR PROCEDURE** • Perform “After Repair Procedure”. (See F–66 AFTER REPAIR PROCEDURE.) • Is there any DTC present?	Yes	Go to applicable DTC troubleshooting. (See F–67 DTC TABLE.)
		No	Troubleshooting completed.

DTC P0107

A6E397001084W11

DTC P0107	MAP sensor circuit low input
DETECTION CONDITION	• PCM monitors input voltage from MAP sensor when intake air temperature is **above 10 °C {50 °F}**. If input voltage at PCM terminal 1J is **below 0.1V**, PCM determines that MAP sensor circuit has a malfunction. **Diagnostic support note** • This is a continuous monitor (CCM). • MIL illuminates if PCM detects the above malfunction condition during first drive cycle. • PENDING CODE is available if PCM detects the above malfunction condition. • FREEZE FRAME DATA is available. • DTC is stored in the PCM memory.
POSSIBLE CAUSE	• MAP sensor malfunction • Connector or terminal malfunction • Short to ground in wiring between MAP sensor terminal D and PCM terminal 1J • Open circuit in wiring between MAP sensor terminal C and PCM terminal 2K • MAP sensor signal circuit and MAP sensor ground circuit are shorted each other • PCM malfunction

DTC P0107	MAP sensor circuit low input

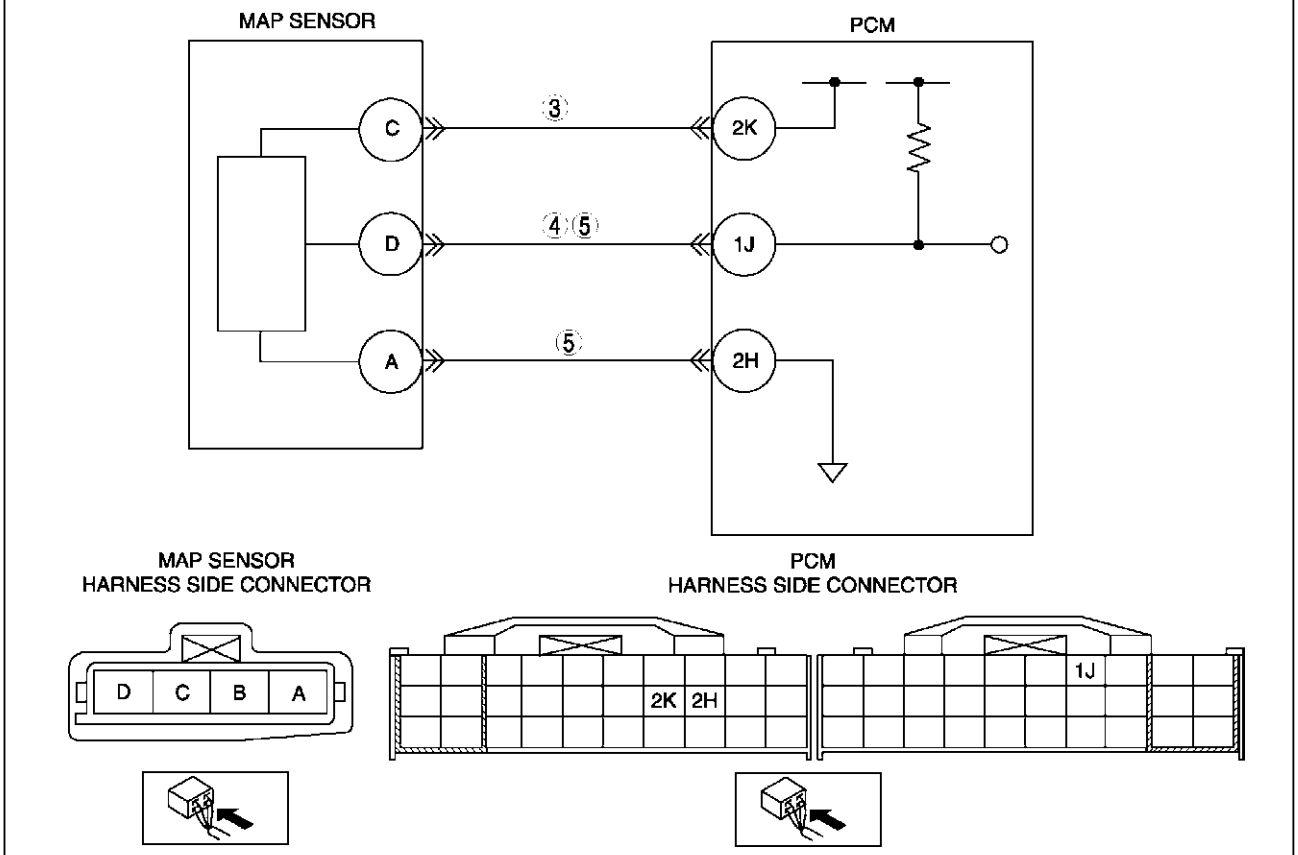

Diagnostic procedure

STEP	INSPECTION		ACTION
1	**PERFORM DTC CONFIRMATION PROCEDURE** • Perform DTC CONFIRMATION PROCEDURE. (See F–66 DTC CONFIRMATION PROCEDURE.) • Is same DTC present?	Yes	Go to next step.
		No	Intermittent concern exists. Go to INTERMITTENT CONCERN TROUBLESHOOTING procedure. (See F–227 INTERMITTENT CONCERN TROUBLESHOOTING.)
2	**VERIFY MAP PID WHEN MAP SENSOR CONNECTOR IS DISCONNECTED** • Disconnect MAP sensor connector. • Is voltage **above 4.9 V**?	Yes	Go to next step.
		No	Go to step 4.
3	**INSPECT POWER SUPPLY CIRCUIT VOLTAGE AT MAP SENSOR CONNECTOR** **Note** • If DTC P0122 and P2228 are also retrieved with P0107, go to CONSTANT VOLTAGE troubleshooting procedure. • Turn ignition key to ON (Engine OFF). • Measure voltage between MAP sensor terminal C (harness-side) and body ground. • Is voltage **within 4.5—5.5 V?**	Yes	Check for poor connection of MAP sensor terminal C (harness-side). • Repair or replace terminal if necessary. • If okay, replace MAP sensor. Then go to Step 6.
		No	Check for open circuit between PCM terminal 2K (harness-side) and MAP sensor terminal C (harness-side). Repair or replace suspected harness, then go to Step 6.
4	**INSPECT MAP SENSOR SIGNAL CIRCUIT FOR SHORT TO GROUND** • Turn ignition key to OFF. • Disconnect PCM connector. • Inspect continuity between MAP sensor terminal D (harness-side) and body ground. • Is there continuity?	Yes	Repair or replace suspected harness, then go to Step 6.
		No	Go to next step.

STEP	INSPECTION		ACTION
5	**INSPECT MAP SENSOR SIGNAL AND GROUND CIRCUIT FOR SHORT EACH OTHER** • Check continuity between MAP sensor terminals D and A (harness-side). • Is there continuity?	Yes	Repair or replace suspected harness, then go to next step.
		No	Go to next step.
6	**VERIFY TROUBLESHOOTING OF DTC P0107 COMPLETED** • Make sure to reconnect all disconnected connectors. • Turn ignition key to ON (Engine OFF). • Clear DTC from memory using WDS or equivalent. • Perform KOEO/KOER self-test. (See F–66 KOEO/KOER SELF-TEST.) • Is same DTC present?	Yes	Replace PCM, then go to next step. (See F–43 PCM REMOVAL/INSTALLATION.)
		No	Go to next step.
7	**VERIFY AFTER REPAIR PROCEDURE** • Perform “After Repair Procedure”. (See F–66 AFTER REPAIR PROCEDURE.) • Is there any DTC present?	Yes	Go to applicable DTC troubleshooting. (See F–67 DTC TABLE.)
		No	Troubleshooting completed.

DTC P0108

A6E397001084W12

DTC P0108	MAP sensor circuit high input
DETECTION CONDITION	• PCM monitors input voltage from MAP sensor when intake air temperature is **above 10 °C {50 °F}**. If input voltage at PCM terminal 1J is **above 4.9V**, PCM determines that MAP sensor circuit has malfunction. **Diagnostic support note** • This is a continuous monitor (CCM). • MIL illuminates if PCM detects the above malfunction condition during first drive cycle. • PENDING CODE is available if PCM detects the above malfunction condition. • FREEZE FRAME DATA is available. • DTC is stored in the PCM memory.
POSSIBLE CAUSE	• MAP sensor malfunction • Connector or terminal malfunction • Open circuit in wiring between MAP sensor terminal A and PCM terminal 2H • Open circuit in wiring between MAP sensor terminal D and PCM terminal 1J • MAP sensor signal circuit shorts to constant voltage supply circuit • PCM malfunction

DTC P0108	MAP sensor circuit high input

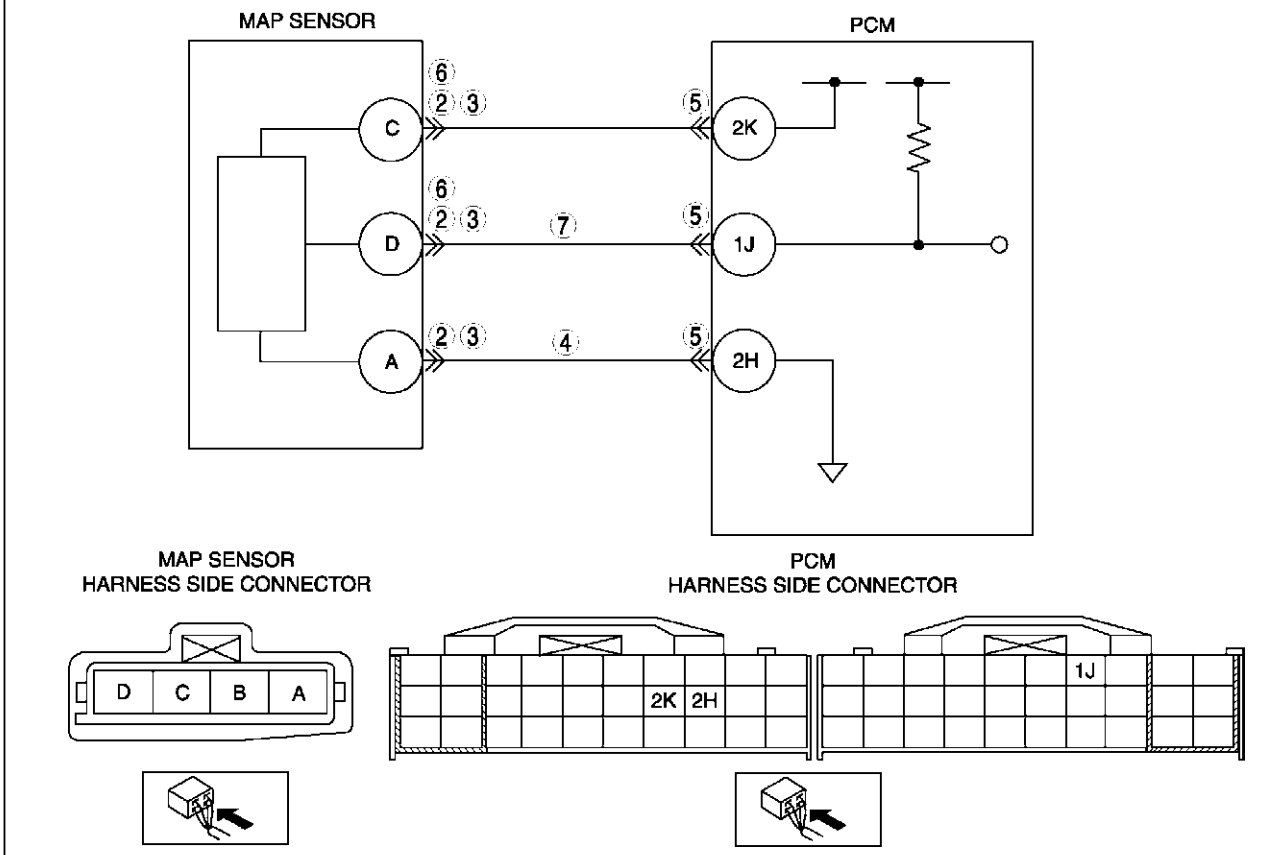

Diagnostic procedure

STEP	INSPECTION		ACTION
1	**PERFORM DTC CONFIRMATION PROCEDURE** • Perform DTC CONFIRMATION PROCEDURE. (See F–66 DTC CONFIRMATION PROCEDURE.) • Is same DTC present?	Yes	Go to next step.
		No	Intermittent concern exists. Go to INTERMITTENT CONCERN TROUBLESHOOTING procedure. (See F–227 INTERMITTENT CONCERN TROUBLESHOOTING.)
2	**INSPECT CONNECTION OF MAP SENSOR CONNECTOR** • Turn ignition key to OFF. • Verify that the MAP sensor connector is connected securely. • Is connection okay?	Yes	Go to next step.
		No	Reconnect the connector, then go to Step 8.
3	**INSPECT POOR CONNECTION OF MAP SENSOR CONNECTOR** • Disconnect the MAP sensor connector. • Inspect for poor connection (damaged, pulled-out pins, corrosion, etc.). • Is there any malfunction?	Yes	Repair or replace suspected terminal, then go to Step 8.
		No	Go to next step.
4	**VERIFY MAP SENSOR GROUND CIRCUIT FOR OPEN CIRCUIT** • Inspect continuity between MAP sensor terminal A (harness-side) and body ground. • Is there continuity?	Yes	Go to next step.
		No	Inspect for open circuit between PCM terminal 2H (harness-side) and MAP sensor terminal A (harness-side). Repair or replace suspected harness, then go to Step 8.
5	**INSPECT PCM CONNECTOR** • Disconnect PCM connector. • Inspect for poor connection at terminal 2H (damaged, pulled-out pins, corrosion, etc.). • Is there any malfunction?	Yes	Repair terminal, then go to Step 8.
		No	Go to next step.

STEP	INSPECTION		ACTION
6	**VERIFY MAP SENSOR SIGNAL CIRCUIT FOR SHORT TO CONSTANT VOLTAGE CIRCUIT** • Inspect for continuity between MAP sensor terminal D and C (harness-side). • Is there any continuity?	Yes	Repair or replace suspected harness, then go to Step 8.
		No	Go to next step.
7	**VERIFY MAP SENSOR SIGNAL CIRCUIT FOR OPEN CIRCUIT** • Inspect continuity between MAP sensor terminal D (harness-side) and PCM terminal 1J (harness-side). • Is there any continuity?	Yes	Go to next step.
		No	Repair or replace suspected harness, then go to next step.
8	**VERIFY TROUBLESHOOTING OF DTC P0108 COMPLETED** • Make sure to reconnect all disconnected connectors. • Turn ignition key to ON (Engine OFF). • Clear DTC from memory using WDS or equivalent. • Perform KOEO/KOER self-test. (See F–66 KOEO/KOER SELF-TEST.) • Is same DTC present?	Yes	Replace PCM, then go to next step. (See F–43 PCM REMOVAL/INSTALLATION.)
		No	Go to next step.
9	**VERIFY AFTER REPAIR PROCEDURE** • Perform “After Repair Procedure”. (See F–66 AFTER REPAIR PROCEDURE.) • Is there any DTC present?	Yes	Go to applicable DTC troubleshooting. (See F–67 DTC TABLE.)
		No	Troubleshooting completed.

DTC P0111

A6E397001084W13

DTC P0111	IAT circuit performance problem
DETECTION CONDITION	• If intake air temperature is higher than engine coolant temperature by **40 °C {104 °F}** with ignition key on, the PCM determines that there is a IAT sensor performance problem. **Diagnostic support note** • This is a continuous monitor (CCM). • MIL illuminates if PCM detects the above malfunction condition in two consecutive drive cycles or in one drive cycle while the DTC for the same malfunction has been stored in the PCM. • PENDING CODE is available if PCM detects the above malfunction condition during first drive cycle. • FREEZE FRAME DATA is available. • DTC is stored in PCM memory.
POSSIBLE CAUSE	• IAT sensor malfunction • Poor connection at MAF/IAT sensor or PCM connector • PCM malfunction

Diagnostic procedure

STEP	INSPECTION		ACTION
1	**VERIFY FREEZE FRAME DATA HAS BEEN RECORDED** • Has FREEZE FRAME DATA been recorded?	Yes	Go to next step.
		No	Record FREEZE FRAME DATA on repair order, then go to next step.
2	**VERIFY RELATED SERVICE INFORMATION AVAILABILITY** • Check for related Service Information availability. • Is any related Service Information available?	Yes	Perform repair or diagnosis according to available Service Information. • If vehicle is not repaired, go to next step.
		No	Go to next step.
3	**INSPECT POOR CONNECTION OF MAF/IAT SENSOR CONNECTOR** • Turn ignition key to OFF. • Disconnect MAF/IAT sensor connector. • Inspect for poor connection (damaged, pulled-out pins, corrosion, etc.). • Are there any malfunctions?	Yes	Repair or replace terminal, then go to Step 6.
		No	Go to next step.
4	**INSPECT IAT SENSOR** • Inspect IAT sensor. (See F–50 INTAKE AIR TEMPERATURE (IAT) SENSOR INSPECTION) • Is IAT sensor okay?	Yes	Replace MAF/IAT sensor, then go to Step 6.
		No	Go to next step.

STEP	INSPECTION		ACTION
5	**INSPECT POOR CONNECTION OF PCM CONNECTOR** • Disconnect PCM connector. • Inspect for poor connection (damaged, pulled-out pins, corrosion, etc.). • Are there any malfunction?	Yes	Repair or replace terminal, then go to Step 6.
		No	Go to next step.
6	**VERIFY TROUBLESHOOTING OF DTC P0111 COMPLETED** • Make sure to reconnect all disconnected connectors. • Clear DTC from PCM memory using WDS or equivalent. • Start engine and run engine under FREEZE FRAME DATA condition. • Is PENDING CODE the same as DTC present?	Yes	Replace PCM, then go to next step. (See F–43 PCM REMOVAL/INSTALLATION.)
		No	Go to next step.
7	**VERIFY AFTER REPAIR PROCEDURE** • Is there any DTC present?	Yes	Go to applicable DTC troubleshooting. (See F–67 DTC TABLE.)
		No	Troubleshooting completed.

F

DTC P0112

A6E397001084W14

DTC P0112	IAT circuit low input
DETECTION CONDITION	• PCM monitors IAT sensor signal at PCM terminal 2E. If PCM detects IAT sensor voltage **below 0.15 V**, PCM determines that IAT sensor circuit has malfunction. **Diagnostic support note** • This is a continuous monitor (CCM). • MIL illuminates if PCM detects the above malfunction condition during first drive cycle. • PENDING CODE is available if PCM detects the above malfunction condition. • FREEZE FRAME DATA is available. • DTC is stored in the PCM memory.
POSSIBLE CAUSE	• IAT sensor malfunction • Short to ground circuit between MAF/IAT sensor terminal D and PCM terminal 2E • Short each harness IAT signal circuit and IAT ground circuit. • PCM malfunction

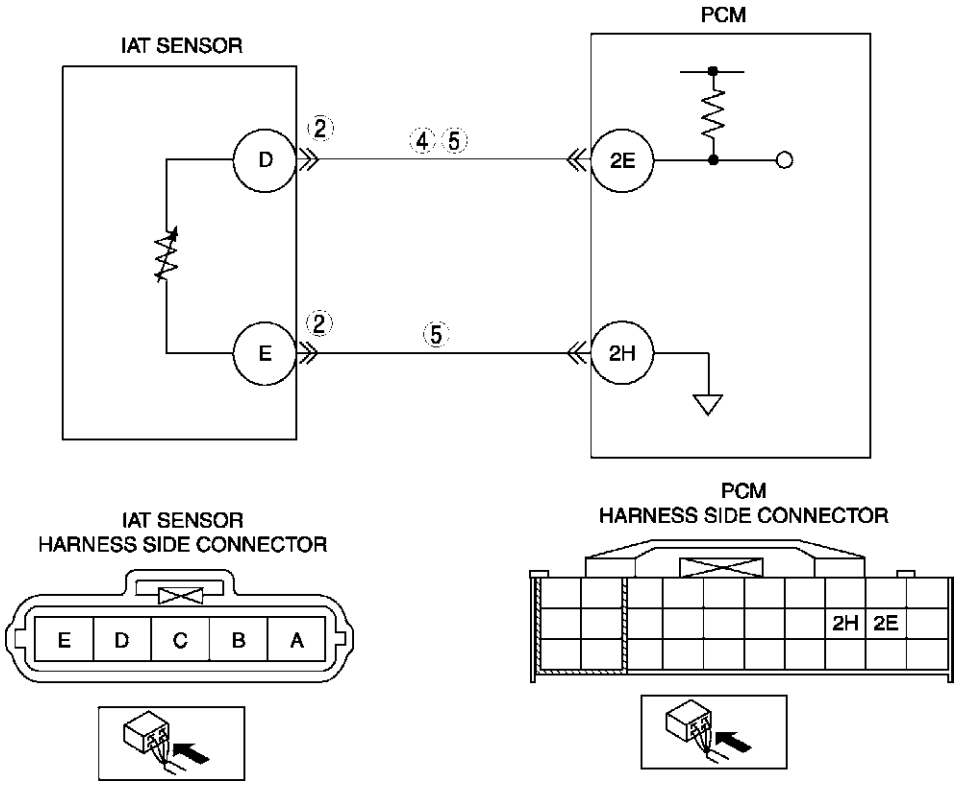

Diagnostic procedure

STEP	INSPECTION		ACTION
1	**PERFORM DTC CONFIRMATION PROCEDURE** • Perform DTC CONFIRMATION PROCEDURE. (See F–66 DTC CONFIRMATION PROCEDURE.) • Is same DTC present?	Yes	Go to next step.
		No	Intermittent concern exists. Go to INTERMITTENT CONCERN TROUBLESHOOTING procedure. (See F–227 INTERMITTENT CONCERN TROUBLESHOOTING.)
2	**INSPECT IAT SENSOR TERMINAL** • Turn ignition key to OFF. • Disconnect MAF/IAT sensor connector. • Inspect for bent terminal of MAF/IAT sensor terminals D and E (part-side). • Is there any malfunction?	Yes	Repair or replace terminal, then go to Step 6.
		No	Go to next step.
3	**CLASSIFY IAT SENSOR MALFUNCTION OR HARNESS MALFUNCTION** • Connect WDS or equivalent to DLC-2. • Access IAT PID. • Verify IAT value when disconnecting MAF/IAT sensor connector. • Does IAT value change?	Yes	Replace MAF/IAT sensor, then go to Step 6.
		No	Go to next step.
4	**INSPECT IAT SIGNAL CIRCUIT FOR SHORT TO GROUND** • Turn ignition key to OFF. • Disconnect PCM connector. • Inspect continuity between MAF/IAT sensor terminal D (harness-side) and body ground. • Is there any continuity?	Yes	Repair or replace harness for short to ground, then go to Step 6.
		No	Go to next step.
5	**INSPECT IAT CIRCUITS FOR SHORT** • Inspect continuity between MAF/IAT sensor terminals D and E (harness-side). • Is there continuity?	Yes	Repair or replace harness for short, then go to Step 6.
		No	Go to next step.
6	**VERIFY TROUBLESHOOTING OF DTC P0112 COMPLETED** • Make sure to reconnect all disconnected connectors. • Clear DTC from PCM memory using WDS or equivalent. • Perform KOEO/KOER self-test. (See F–66 KOEO/KOER SELF-TEST.) • Is same DTC present?	Yes	Replace PCM, then go to next step. (See F–43 PCM REMOVAL/INSTALLATION.)
		No	Go to next step.
7	**VERIFY AFTER REPAIR PROCEDURE** • Perform “After Repair Procedure”. (See F–66 AFTER REPAIR PROCEDURE.) • Is there any DTC present?	Yes	Go to applicable DTC troubleshooting. (See F–67 DTC TABLE.)
		No	Troubleshooting completed.

DTC P0113

A6E397001084W15

DTC P0113	IAT circuit high input
DETECTION CONDITION	• PCM monitors input voltage from IAT sensor If input voltage at PCM terminal 2E is **above 4.9 V**, PCM determines that IAT sensor circuit has malfunction. **Diagnostic support note** • This is a continuous monitor (CCM). • MIL illuminates if PCM detects the above malfunction condition during first drive cycle. • PENDING CODE is available if PCM detects the above malfunction condition. • FREEZE FRAME DATA is available. • DTC is stored in the PCM memory.
POSSIBLE CAUSE	• IAT sensor malfunction • Open circuit between MAF/IAT sensor terminal D and PCM terminal 2E • Short to power circuit between MAF/IAT sensor terminal D and PCM terminal 2E • Open circuit between MAF/IAT sensor terminal E and PCM terminal 2H • Poor connection at MAF/IAT sensor or PCM connector. • PCM malfunction

DTC P0113	IAT circuit high input

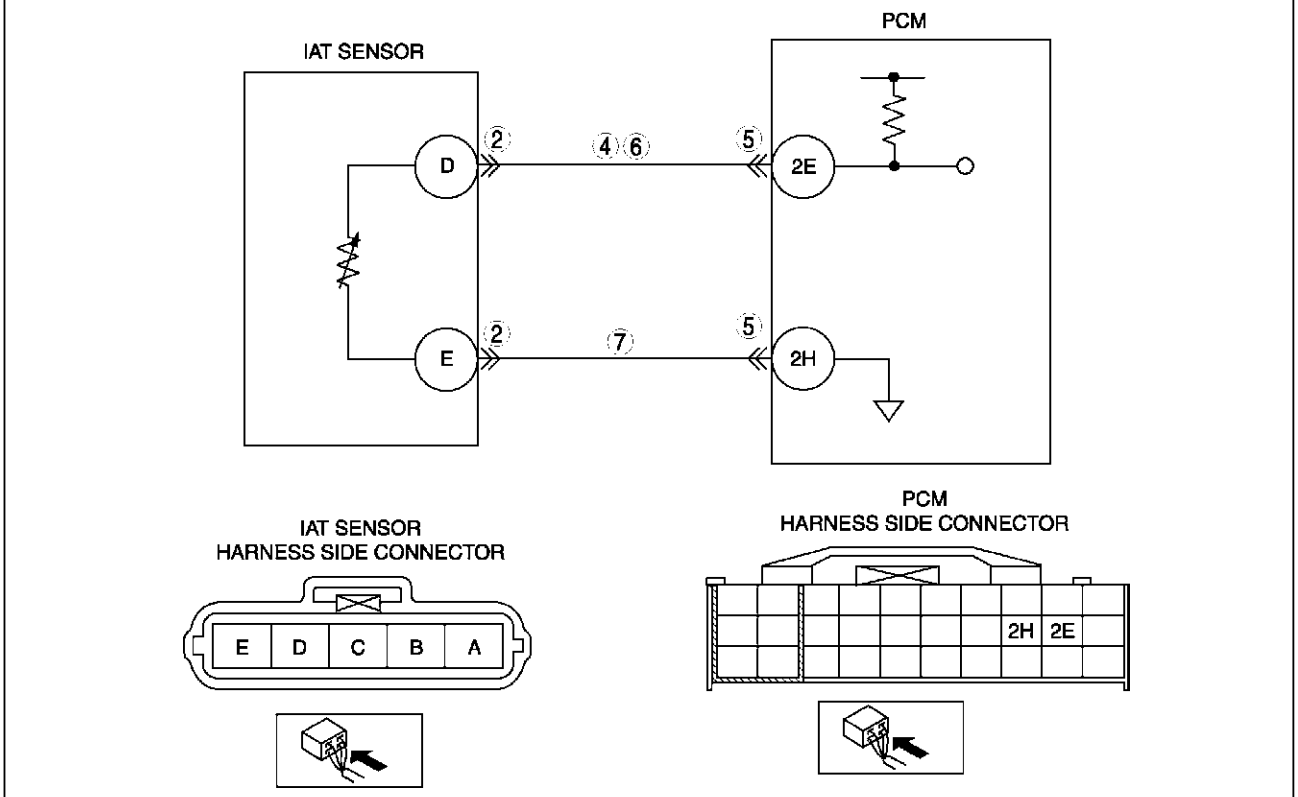

Diagnostic procedure

STEP	INSPECTION		ACTION
1	**PERFORM DTC CONFIRMATION PROCEDURE** • Perform DTC CONFIRMATION PROCEDURE. (See F–66 DTC CONFIRMATION PROCEDURE.) • Is same DTC present?	Yes	Go to next step.
		No	Intermittent concern exists. Go to INTERMITTENT CONCERN TROUBLESHOOTING procedure. (See F–227 INTERMITTENT CONCERN TROUBLESHOOTING.)
2	**INSPECT POOR CONNECTION OF IAT SENSOR CONNECTOR** • Turn ignition key to OFF. • Disconnect MAF/IAT sensor connector. • Inspect for poor connection (damaged, pulled-out pins, corrosion, etc.). • Are there any malfunctions?	Yes	Repair or replace terminal, then go to Step 8.
		No	Go to next step.
3	**CLASSIFY IAT SENSOR MALFUNCTION OR HARNESS MALFUNCTION** • Connect WDS or equivalent to DLC-2. • Access IAT PID. • Connect a jumper wire between MAF/IAT sensor terminals D and E. • Verify IAT value • Is voltage **below 4.9 V**?	Yes	Replace MAF/IAT sensor, then go to Step 8.
		No	Go to next step.
4	**INSPECT IAT SENSOR SIGNAL CIRCUIT FOR SHORT TO POWER** • Turn ignition key to ON (Engine OFF). • Measure voltage between MAF/IAT sensor terminal D (harness-side) and body ground. • Is voltage **B+**?	Yes	Repair or replace harness for short to power, then go to Step 8.
		No	Go to next step.

STEP	INSPECTION		ACTION
5	**INSPECT POOR CONNECTION OF PCM CONNECTOR** • Turn ignition key to OFF. • Disconnect PCM connector. • Inspect PCM terminals 2E and 2H (harness-side) for tightness using feeler tool. • Are there any malfunction?	Yes	Repair or replace terminal, then go to Step 9.
		No	Go to next step.
6	**INSPECT IAT SENSOR SIGNAL CIRCUIT FOR OPEN CIRCUIT** • Inspect continuity between MAF/IAT sensor terminal D (harness-side) and PCM terminal 2E. • Is there any continuity?	Yes	Go to next step.
		No	Repair or replace harness for open, then go to Step 9.
7	**INSPECT IAT SENSOR GROUND CIRCUIT FOR OPEN CIRCUIT** • Inspect continuity between MAF/IAT sensor terminal E (harness-side) and PCM terminal 2H. • Is there continuity?	Yes	Go to next step.
		No	Repair or replace harness for open, then go to next step.
8	**VERIFY TROUBLESHOOTING OF DTC P0113 COMPLETED** • Make sure to reconnect all disconnected connectors. • Clear DTC from PCM memory using WDS or equivalent. • Perform KOEO/KOER self-test. (See F–66 KOEO/KOER SELF-TEST.) • Is same DTC present?	Yes	Replace PCM, then go to next step. (See F–43 PCM REMOVAL/INSTALLATION.)
		No	Go to next step.
9	**VERIFY AFTER REPAIR PROCEDURE** • Perform “After Repair Procedure”. (See F–66 AFTER REPAIR PROCEDURE.) • Is there any DTC present?	Yes	Go to applicable DTC troubleshooting. (See F–67 DTC TABLE.)
		No	Troubleshooting completed.

DTC P0117

A6E397001084W16

DTC P0117	ECT circuit low input
DETECTION CONDITION	• PCM monitors ECT sensor signal at PCM terminal 1M. If PCM detects ECT sensor voltage **below 0.2 V**, PCM determines that the ECT sensor circuit has malfunction. **Diagnostic support note** • This is a continuous monitor (CCM). • MIL illuminates if PCM detects the above malfunction condition during first drive cycle. • PENDING CODE is available if PCM detects the above malfunction condition. • FREEZE FRAME DATA is available. • DTC is stored in the PCM memory.
POSSIBLE CAUSE	• ECT sensor malfunction • Connect or terminal malfunction • Short to ground circuit between ECT sensor terminal A and PCM connector terminal 1M. • Short each harness ECT signal circuit and ECT ground circuit. • PCM malfunction

DTC P0117	ECT circuit low input

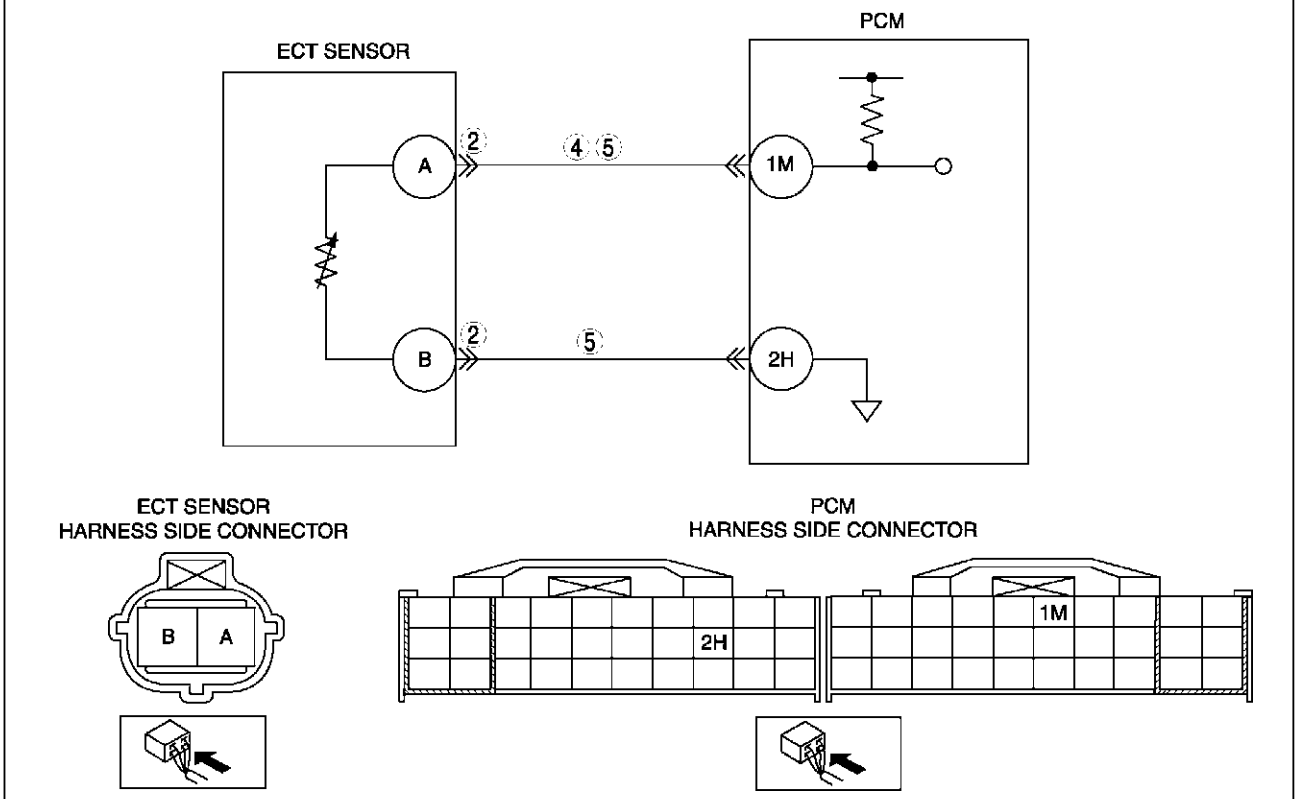

Diagnostic procedure

STEP	INSPECTION		ACTION
1	**PERFORM DTC CONFIRMATION PROCEDURE** • Perform DTC CONFIRMATION PROCEDURE. (See F–66 DTC CONFIRMATION PROCEDURE.) • Is same DTC present?	Yes	Go to next step.
		No	Intermittent concern exists. Go to INTERMITTENT CONCERN TROUBLESHOOTING procedure. (See F–227 INTERMITTENT CONCERN TROUBLESHOOTING.)
2	**INSPECT TERMINAL BENT** • Turn ignition key to OFF. • Disconnect ECT sensor connector. • Inspect for bent of ECT sensor terminals A and B (part-side). • Is there any malfunction?	Yes	Repair or replace terminal, then go to Step 6.
		No	Go to next step.
3	**CLASSIFY ECT SENSOR MALFUNCTION OR HARNESS MALFUNCTION** • Connect WDS or equivalent to DLC-2. • Access ECT PID. • Verify ECT value when disconnecting ECT sensor connector. • Does ECT value change?	Yes	Replace ECT sensor, then go to Step 6.
		No	Go to next step.
4	**INSPECT ECT SIGNAL CIRCUIT FOR SHORT TO GROUND** • Turn ignition key to OFF. • Inspect continuity between ECT sensor terminal A (harness-side) and body ground. • Is there any continuity?	Yes	Repair or replace harness for short to ground, then go to Step 6.
		No	Go to next step.
5	**INSPECT IAT CIRCUIT FOR SHORT HARNESSES** • Inspect continuity between ECT sensor terminal A and B (harness-side). • Is there any continuity?	Yes	Repair or replace harness for short, then go to next step.
		No	Go to next step.

STEP	INSPECTION		ACTION
6	**VERIFY TROUBLESHOOTING OF DTC P0117 COMPLETED** • Make sure to reconnect all disconnected connectors. • Clear DTC from PCM memory using WDS or equivalent. • Perform KOEO/KOER self-test. (See F–66 KOEO/KOER SELF-TEST.) • Is same DTC present?	Yes	Replace PCM, then go to next step. (See F–43 PCM REMOVAL/INSTALLATION.)
		No	Go to next step.
7	**VERIFY AFTER REPAIR PROCEDURE** • Perform “After Repair Procedure”. (See F–66 AFTER REPAIR PROCEDURE.) • Is there any DTC present?	Yes	Go to applicable DTC troubleshooting. (See F–67 DTC TABLE.)
		No	Troubleshooting completed.

DTC P0118

A6E397001084W17

DTC P0118	ECT circuit high input
DETECTION CONDITION	• PCM monitors ECT sensor signal at PCM terminal 1M. If PCM detects ECT sensor voltage **above 4.6 V**, PCM determines that ECT sensor circuit has malfunction. **Diagnostic support note** • This is a continuous monitor (CCM). • MIL illuminates if PCM detects the above malfunction condition during first drive cycle. • PENDING CODE is available if PCM detects the above malfunction condition. • FREEZE FRAME DATA is available. • DTC is stored in the PCM memory.
POSSIBLE CAUSE	• ECT sensor malfunction • Open circuit between ECT sensor terminal A and PCM terminal 1M • Short to power circuit between ECT sensor terminal A and PCM terminal 1M • Open circuit between ECT sensor terminal B and PCM terminal 2H • Poor connection of ECT sensor or PCM connectors • PCM malfunction

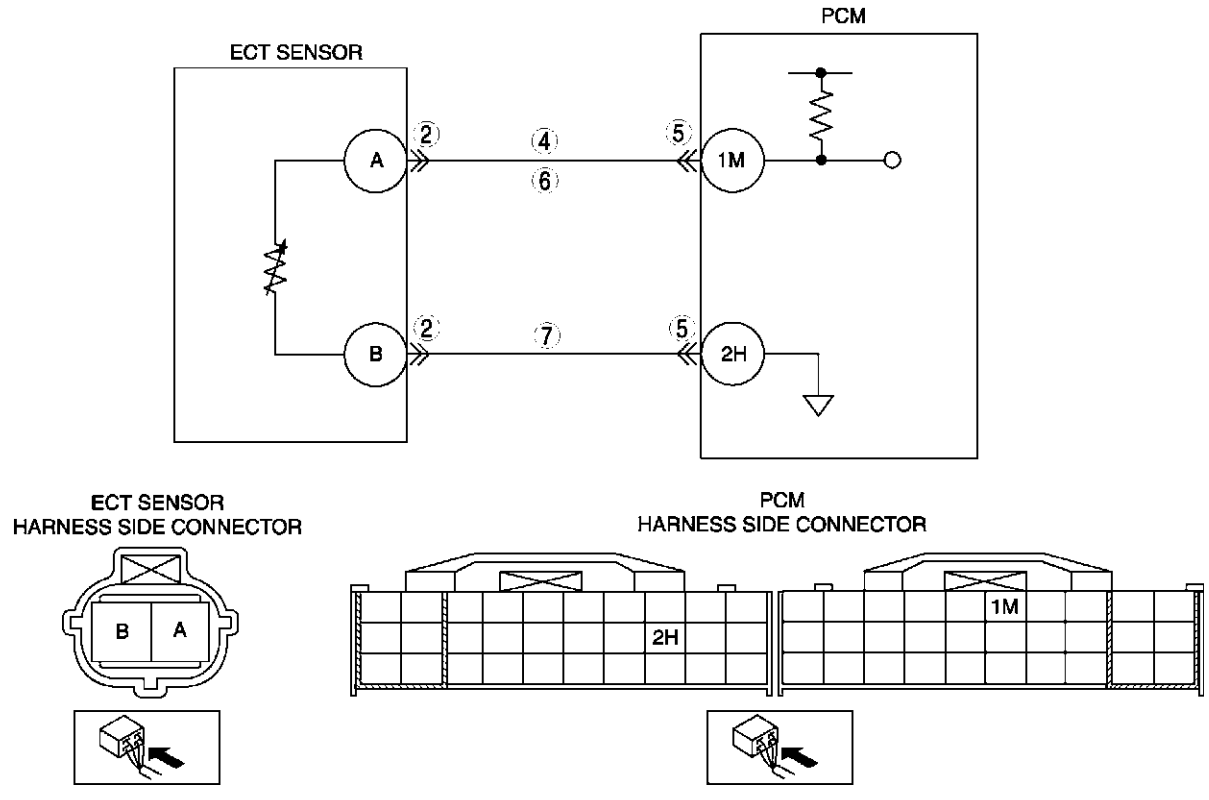

Diagnostic procedure

STEP	INSPECTION		ACTION
1	**PERFORM DTC CONFIRMATION PROCEDURE** • Perform DTC CONFIRMATION PROCEDURE. (See F–66 DTC CONFIRMATION PROCEDURE.) • Is same DTC present?	Yes	Go to next step.
		No	Intermittent concern exists. Go to INTERMITTENT CONCERN TROUBLESHOOTING procedure. (See F–227 INTERMITTENT CONCERN TROUBLESHOOTING.)
2	**INSPECT POOR CONNECTION OF ECT SENSOR CONNECTOR** • Turn ignition key to OFF. • Disconnect ECT sensor connector. • Inspect for poor connection (damaged, pulled-out pins, corrosion, etc.). • Are there any malfunctions?	Yes	Repair or replace terminal, then go to Step 8.
		No	Go to next step.
3	**CLASSIFY ECT SENSOR MALFUNCTION OR HARNESS MALFUNCTION** • Connect WDS or equivalent to DLC-2. • Access ECT PID. • Connect a jumper wire between ECT sensor terminals A and B. • Verify ECT value • Is voltage **below 4.5 V**?	Yes	Replace ECT sensor, then go to Step 8.
		No	Go to next step.
4	**INSPECT ECT SENSOR SIGNAL CIRCUIT FOR SHORT TO POWER** • Turn ignition key to ON (Engine OFF). • Measure voltage between ECT sensor terminal A (harness-side) and body ground. • Is there voltage **B+**?	Yes	Repair or replace harness for short to power, then go to Step 8.
		No	Go to next step.
5	**INSPECT POOR CONNECTION OF PCM CONNECTOR** • Disconnect PCM connector. • Inspect for poor connection (damaged, pulled-out pins, corrosion, etc.). • Are there any malfunction?	Yes	Repair or replace terminal, then go to Step 8.
		No	Go to next step.
6	**INSPECT ECT SENSOR SIGNAL CIRCUIT FOR OPEN CIRCUIT** • Inspect continuity between ECT sensor terminal A (harness-side) and PCM terminal 1M. • Is there any continuity?	Yes	Go to next step.
		No	Repair or replace harness for open, then go to Step 8.
7	**INSPECT ECT SENSOR GROUND CIRCUIT FOR OPEN CIRCUIT** • Inspect continuity between ECT sensor terminal B (harness-side) and PCM terminal 2H. • Is there any continuity?	Yes	Go to next step.
		No	Repair or replace harness for open, then go to next step.
8	**VERIFY TROUBLESHOOTING OF DTC P0118 COMPLETED** • Make sure to reconnect all disconnected connectors. • Clear DTC from PCM memory using WDS or equivalent. • Perform KOEO/KOER self-test. (See F–66 KOEO/KOER SELF-TEST.) • Is same DTC present?	Yes	Replace PCM, then go to next step. (See F–43 PCM REMOVAL/INSTALLATION.)
		No	Go to next step.
9	**VERIFY AFTER REPAIR PROCEDURE** • Perform “After Repair Procedure”. (See F–66 AFTER REPAIR PROCEDURE.) • Is there any DTC present?	Yes	Go to applicable DTC troubleshooting. (See F–67 DTC TABLE.)
		No	Troubleshooting completed.

F

DTC P0121

A6E397001084W18

DTC P0121	Throttle position stuck close (lower than expected)/open (higher than expected)
DETECTION CONDITION	• If PCM detects that throttle valve opening angle is **below 12.5%** for **5 s** after following conditions are met, PCM determines that TP is stuck closed: **MONITORING CONDITION** — Engine coolant temperature **above 80 °C {176 °F}** — MAF sensor signal **above 32.0 g/s {4.2 lb/minutes}** • If PCM detects that throttle valve opening angle is **above 50%** for **5 seconds** after following conditions are met, the PCM determines that TP is stuck open: **MONITORING CONDITION** — Engine speed **above 500 rpm** — MAF sensor signal **5 g/s {0.7 lb/min.}** **Diagnostic support note** • This is a continuous monitor (CCM). • MIL illuminates if PCM detects the above malfunction condition in two consecutive drive cycles or in one drive cycle while the DTC for the same malfunction has been stored in the PCM. • PENDING CODE is available if PCM detects the above malfunction condition. • FREEZE FRAME DATA is available. • DTC is stored in the PCM memory.
POSSIBLE CAUSE	• TP sensor malfunction • Electrical corrosion in TP signal circuit • Voltage drops in constant voltage supply circuit • Voltage drops in ground circuit • MAF sensor malfunction • PCM malfunction

Diagnostic procedure

STEP	INSPECTION		ACTION
1	**VERIFY FREEZE FRAME DATA HAS BEEN RECORDED** • Has FREEZE FRAME DATA been recorded?	Yes	Go to next step.
		No	Record FREEZE FRAME DATA on repair order, then go to next step.
2	**VERIFY RELATED PENDING CODE OR STORED DTC** • Turn ignition key to ON (Engine OFF). • Retrieve pending or stored DTC using WDS or equivalent. • Is DTC P0101 also retrieved?	Yes	Go to DTC P0101 troubleshooting procedure.
		No	Go to next step.
3	**VERIFY RELATED SERVICE INFORMATION AVAILABILITY** • Check for related Service Information availability. • Is any related Service Information available?	Yes	Perform repair or diagnosis according to available Service Information. • If vehicle is not repaired, go to next step.
		No	Go to next step.
4	**VERIFY CURRENT INPUT SIGNAL STATUS - IS CONCERN INTERMITTENT OR CONSTANT** • Start the engine. • Access ECT, TP and MAF PIDs using WDS or equivalent. • Warm up the engine until ECT PID is **above 80 °C {176 °F}** • Drive the vehicle. • Read TP PID while MAF PID is **above 32.0 g/s {4.2 lb/min.}**. • Is TP PID reading **above 12.5%**?	Yes	Go to Step 7.
		No	Go to next step.
5	**VERIFY TP PID** • Start engine. • Access TP, MAF and RPM PIDs using WDS or equivalent. • Read TP PID while MAF PID is **below 4.8 g/s {0.6 lb/min.}** and RPM PID is **above 500 rpm**. • Is TP PID reading **above 50%**?	Yes	Go to Step 12.
		No	Go to next step.

STEP	INSPECTION		ACTION
6	**VERIFY CURRENT INPUT SIGNAL STATUS - IS CONCERN INTERMITTENT OR CONSTANT** • Drive the vehicle and read MAF PID. • Does MAF PID change in compliance with driving condition?	Yes	Intermittent concern exists. Go to INTERMITTENT CONCERNS troubleshooting procedure.
		No	Inspect Mass airflow sensor and related circuits and terminals. (See F–51 MASS AIR FLOW (MAF) SENSOR INSPECTION.) Repair or replace as necessary, then go to Step 16.
7	**INSPECT TP SENSOR TERMINALS FOR ELECTRICAL CORROSION** • Turn ignition key to OFF. • Disconnect TP sensor connector • Inspect for electrical corrosion on male and female TP sensor terminals. • Is any electrical corrosion found?	Yes	Repair or replace suspected terminal or TP sensor, then go to Step 11.
		No	Go to next step.
8	**VERIFY TP SENSOR** • Does TP sensor resistance smoothly change while gradually opening throttle valve?	Yes	Go to next step.
		No	Replace TP sensor, then go to Step 11.
9	**INSPECT PCM TERMINALS FOR ELECTRICAL CORROSION** • Disconnect PCM connector. • Inspect for electrical corrosion on PCM male and female terminals. • Is any electrical corrosion found?	Yes	Repair terminal, then go to Step 11.
		No	Go to next step.
10	**INSPECT CONSTANT VOLTAGE SUPPLY AND TP SIGNAL CIRCUITS FOR VOLTAGE DROP** • Turn ignition key to ON (Engine OFF). • Inspect voltage between following terminals: — TP sensor connector terminal C (harness-side) and PCM terminal 2K — TP sensor connector terminal B (harness-side) and PCM terminal 2A • Is voltage **approx. 0 V**?	Yes	Go to next step.
		No	Inspect for rust or corrosion on PCM terminals 2A and 2K (harness-side). • Repair or replace suspected terminal then go to next step.
11	**VERIFY TROUBLESHOOTING OF DTC P0121 COMPLETED** • Make sure to reconnect all disconnected connectors. • Start the engine. • Clear DTC from PCM memory using WDS or equivalent. • Access ECT, TP and MAF PIDs using WDS or equivalent. • Warm up the engine until ECT PID is reading **above 80 °C {176°F}**. • Drive the vehicle and read TP and MAF PIDs. • Verify PIDs reading are within specifications MAF PID: **above 32.0 g/s {4.2 lb/min.}** TP PID: **above 12.5% above 5 s** • Is PENDING CODE of same DTC present?	Yes	Replace PCM, then go to Step 17.
		No	Go to Step 17.
12	**INSPECT TP SENSOR TERMINALS FOR ELECTRICAL CORROSION** • Turn ignition key to OFF. • Disconnect TP sensor connector. • Inspect for electrical corrosion on male and female TP sensor terminals. • Is any electrical corrosion found?	Yes	Repair or replace suspected terminal or TP sensor, then go to Step 16.
		No	Go to next step.
13	**INSPECT GROUND CIRCUIT FOR VOLTAGE DROP** • Inspect resistance between TP sensor terminal A (harness-side) and body ground. • Is resistance **approx. 0 ohm**?	Yes	Go to next step.
		No	Repair or replace for rust or corrosion on PCM terminal 2H (harness-side). • Repair or replace suspected terminal. Go to Step 16.
14	**VERIFY TP SENSOR** • Does resistance smoothly change while gradually opening throttle valve?	Yes	Go to next step.
		No	Replace TP sensor, then go to Step 16.

F

STEP	INSPECTION		ACTION
15	**INSPECT PCM TERMINALS FOR ELECTRICAL CORROSION** • Disconnect PCM connector. • Inspect for electrical corrosion on PCM and PCM connector male and female terminals. • Is any electrical corrosion found?	Yes	Repair terminal, then go to next step.
		No	Go to next step.
16	**VERIFY TROUBLESHOOTING OF DTC P0121 COMPLETED** • Make sure to reconnect all disconnected connectors. • Start engine. • Clear DTC from PCM memory using WDS or equivalent. • Access RPM, TP and MAF PIDs using WDS or equivalent. • Verify TP PID is reading **below 50%** while MAF PID is **below 4.8 g/s {0.6 lb/min.}** and RPM PID is **above 500 rpm**. • Is pending code the same as DTC present?	Yes	Replace PCM, then go to next step. (See F–43 PCM REMOVAL/INSTALLATION.)
		No	Go to next step.
17	**VERIFY AFTER REPAIR PROCEDURE** • Is there any DTC present?	Yes	Go to applicable DTC troubleshooting. (See F–67 DTC TABLE.)
		No	Troubleshooting completed.

DTC P0122

A6E397001084W19

DTC P0122	TP circuit low input
DETECTION CONDITION	• If PCM detects TP sensor voltage at PCM terminal 2A is **below 0.1 V** while engine running, PCM determines that TP circuit has malfunction. **Diagnostic support note** • This is a continuous monitor (CCM). • MIL illuminates if PCM detects the above malfunction conditions in first drive cycles. • PENDING CODE is available if PCM detects the above malfunction condition. • FREEZE FRAME DATA is available. • DTC is stored in the PCM memory.
POSSIBLE CAUSE	• TP sensor malfunction • Connector or terminal malfunction • Open circuit between TP sensor terminal B and PCM terminal 2A • Short to ground circuit between TP sensor terminal B and PCM terminal 2A • Open circuit between TP sensor terminal C and PCM terminal 2K

DTC P0122	TP circuit low input

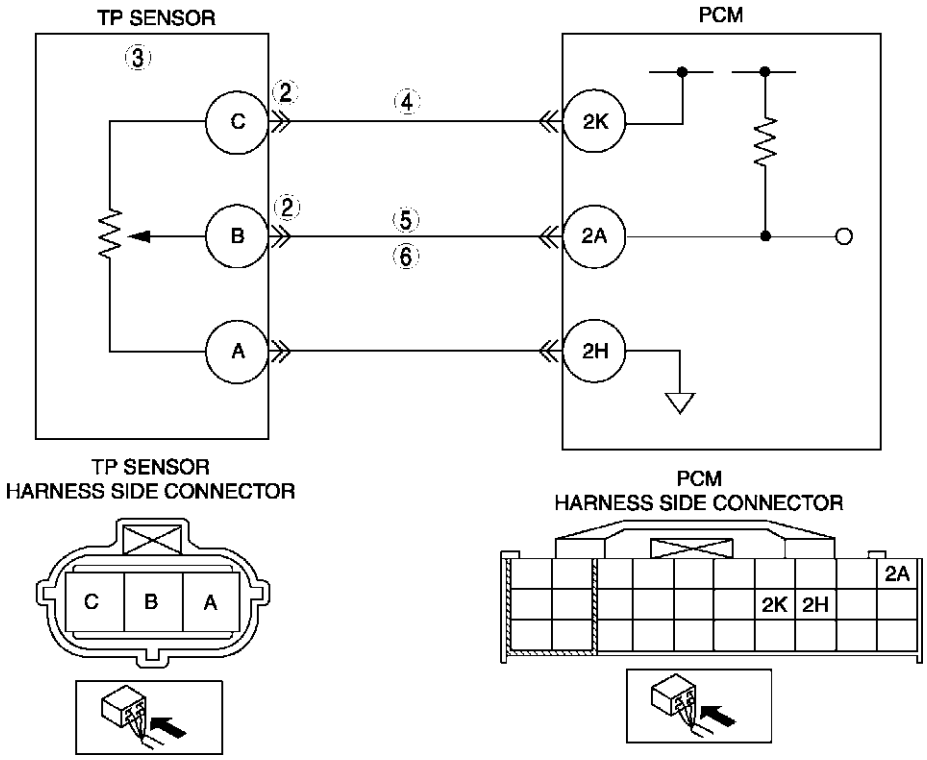

Diagnostic procedure

STEP	INSPECTION		ACTION
1	**PERFORM DTC CONFIRMATION PROCEDURE** • Perform DTC CONFIRMATION PROCEDURE. (See F–66 DTC CONFIRMATION PROCEDURE.) • Is same DTC present?	Yes	Go to next step.
		No	Intermittent concern exists. Go to INTERMITTENT CONCERN TROUBLESHOOTING procedure. (See F–227 INTERMITTENT CONCERN TROUBLESHOOTING.)
2	**CLASSIFY TP SENSOR OR HARNESS MALFUNCTION** • Connect WDS or equivalent. • Access TP PID. • Disconnect TP sensor connector. • Connect a jumper wire between TP sensor terminals B and C (harness-side). • Is voltage **above 4.9 V**?	Yes	Go to next step.
		No	Go to step 4.
3	**INSPECT TP SENSOR** • Perform TP sensor inspection. (See F–51 THROTTLE POSITION (TP) SENSOR INSPECTION.) • Is TP sensor okay?	Yes	Inspect for poor TP sensor connector terminal C connection. Repair or replace as necessary, then go to Step 7.
		No	Replace TP sensor, then go to Step 7.
4	**INSPECT POWER SUPPLY CIRCUIT VOLTAGE AT TP SENSOR CONNECTOR** **Note** • If DTC P0107 and P2228 are also retrieved with P0122, go to CONSTANT VOLTAGE troubleshooting procedure. • Turn ignition key to ON (Engine OFF). • Inspect voltage at TP sensor terminal 2k (harness-side). • Is there voltage **within 4.5—5.5 V**?	Yes	Go to next step.
		No	Repair or replace open circuit between TP sensor connector terminal C and PCM connector terminal 2K (harness-side). Then, then go to Step 7.

STEP	INSPECTION		ACTION
5	**VERIFY TP SIGNAL CIRCUIT FOR OPEN CIRCUIT** • Turn ignition key to OFF. • Inspect continuity between TP sensor terminal B (harness-side) and PCM terminal 2A. • Is there continuity?	Yes	Go to next step.
		No	Repair or replace suspected harness, then go to Step 7.
6	**VERIFY TP SIGNAL CIRCUIT FOR SHORT TO GROUND** • Inspect continuity between TP sensor terminal B (harness-side) and body ground. • Is there continuity?	Yes	Repair or replace suspected harness, then go to Step 7.
		No	Go to next step.
7	**VERIFY TROUBLESHOOTING OF DTC P0122 COMPLETED** • Make sure to reconnect all disconnected connectors. • Clear DTC from PCM memory using WDS or equivalent. • Perform KOEO/KOER self-test. (See F–66 KOEO/KOER SELF-TEST.) • Is same DTC present?	Yes	Replace PCM, then go to next step. (See F–43 PCM REMOVAL/INSTALLATION.)
		No	Go to next step.
8	**VERIFY AFTER REPAIR PROCEDURE** • Perform “After Repair Procedure”. (See F–66 AFTER REPAIR PROCEDURE.) • Is there any DTC present?	Yes	Go to applicable DTC troubleshooting. (See F–67 DTC TABLE.)
		No	Troubleshooting completed.

DTC P0123

A6E397001084W20

DTC P0123	TP circuit high input
DETECTION CONDITION	• If PCM detects TP sensor voltage at PCM terminal 2A is **above 4.9 V** after ignition key to on, the PCM determines that TP circuit has malfunction. **Diagnostic support note** • This is a continuous monitor (CCM). • MIL illuminates if PCM detects the above malfunction condition in first drive cycles. • PENDING CODE is available if PCM detects the above malfunction condition. • FREEZE FRAME DATA is available. • DTC is stored in the PCM memory.
POSSIBLE CAUSE	• TP sensor malfunction • Connector or terminal malfunction • Open circuit between TP sensor terminal A and PCM terminal 2H • Short to constant voltage supply circuit between TP sensor terminal B and PCM terminal 2A

DTC P0123	TP circuit high input

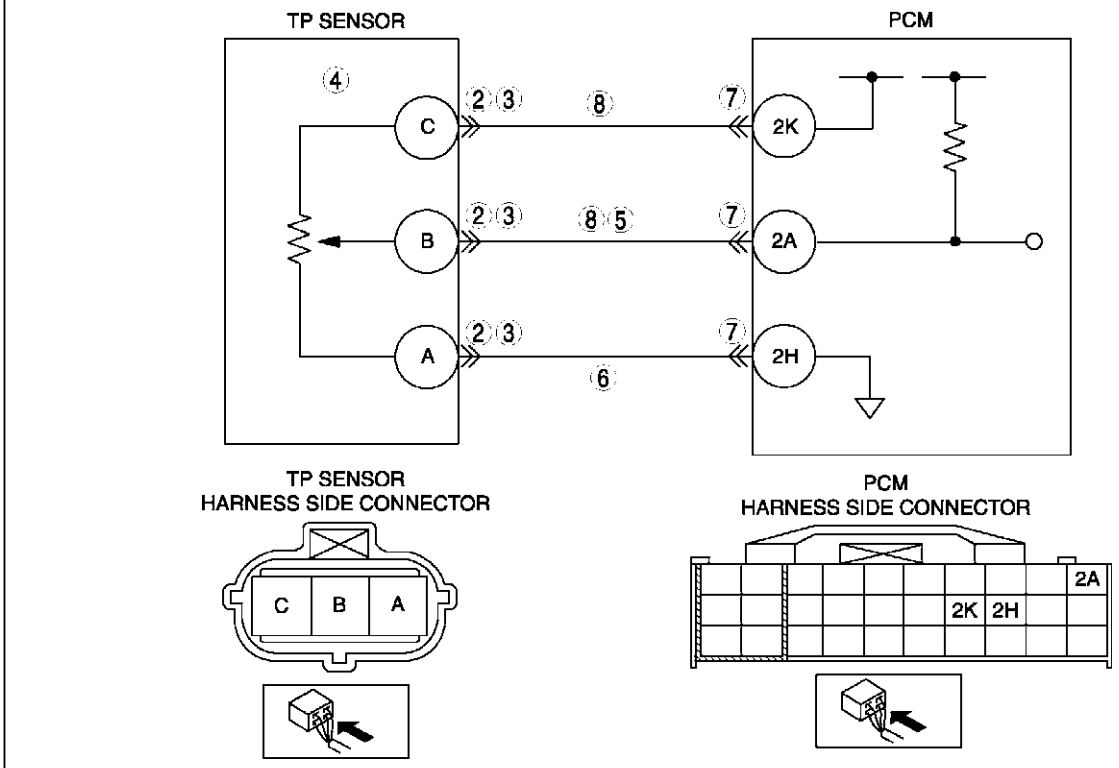

Diagnostic procedure

STEP	INSPECTION		ACTION
1	**PERFORM DTC CONFIRMATION PROCEDURE** • Perform DTC CONFIRMATION PROCEDURE. (See F–66 DTC CONFIRMATION PROCEDURE.) • Is same DTC present?	Yes	Go to next step.
		No	Intermittent concern exists. Go to INTERMITTENT CONCERN TROUBLESHOOTING procedure. (See F–227 INTERMITTENT CONCERN TROUBLESHOOTING.)
2	**INSPECT TP SENSOR CONNECTOR** • Turn ignition key to OFF. • Verify that the TP sensor connector is connected securely. • Is connector okay?	Yes	Go to next step.
		No	Connect the connector securely, then go to Step 9.
3	**INSPECT POOR CONNECTION OF TP SENSOR CONNECTOR** • Disconnect TP sensor connector. • Inspect for poor connection (damaged, pulled-out terminals, corrosion, etc.). • Is there any malfunction?	Yes	Repair or replace suspected terminal, then go to Step 9.
		No	Go to next step.
4	**INSPECT TP SENSOR** • Perform TP sensor inspection. (See F–51 THROTTLE POSITION (TP) SENSOR INSPECTION) • Is TP sensor okay?	Yes	Go to next step.
		No	Replace TP sensor, then go to Step 9.
5	**INSPECT TP SENSOR SIGNAL CIRCUIT FOR SHORT TO POWER** • Turn ignition key to ON (Engine OFF). • Measure voltage between terminal B and body ground. • Is voltage **above 4.9**?	Yes	Repair or replace short to power circuit. Then, go to Step 9.
		No	Go to next step.
6	**VERIFY TP SENSOR GROUND CIRCUIT FOR OPEN CIRCUIT** • Inspect continuity between TP sensor connector terminal A and body ground. • Is there continuity?	Yes	Repair or replace open circuit between TP sensor connector terminal A (harness-side) and PCM connector terminal 2H (harness-side). Then, go to Step 9.
		No	Go to next step.

STEP	INSPECTION		ACTION
7	**INSPECT PCM CONNECTOR** • Disconnect PCM connector. • Inspect for poor connection (damaged, pulled-out terminals, corrosion, etc.). • Is there any malfunction?	Yes	Repair terminal, then go to Step 9.
		No	Go to Step 9.
8	**VERIFY TP SIGNAL CIRCUIT FOR SHORT TO CONSTANT VOLTAGE CIRCUIT** • Inspect continuity between TP sensor connector terminals B and C. • Is there continuity?	Yes	Repair or replace suspected harness, then go to next step.
		No	Go to next step.
9	**VERIFY TROUBLESHOOTING OF DTC P0123 COMPLETED** • Make sure to reconnect all disconnected connectors. • Clear DTC from PCM memory using WDS or equivalent. • Perform KOEO/KOER self-test. (See F–66 KOEO/KOER SELF-TEST.) • Is same DTC present?	Yes	Replace PCM, then go to next step. (See F–43 PCM REMOVAL/INSTALLATION.)
		No	Go to next step.
10	**VERIFY AFTER REPAIR PROCEDURE** • Perform “After Repair Procedure”. (See F–66 AFTER REPAIR PROCEDURE.) • Is there any DTC present?	Yes	Go to applicable DTC troubleshooting. (See F–67 DTC TABLE.)
		No	Troubleshooting completed.

DTC P0125

A6E397001084W21

DTC P0125	Excessive time to enter closed loop fuel control
DETECTION CONDITION	• PCM monitors ECT sensor signal at PCM terminal 1M after engine is started while engine is cold. If engine coolant temperature does not reach the expected temperature for specified period, PCM determines that it has taken an excessive amount of time for the engine coolant temperature to reach the temperature necessary to start closed-loop fuel control. **Diagnostic support note** • This is a continuous monitor (CCM). • MIL illuminates if PCM detects the above malfunction condition in two consecutive drive cycles or in one drive cycle while the DTC for the same malfunction has been stored in the PCM. • PENDING CODE is available if PCM detects the above malfunction condition during first drive cycle. • FREEZE FRAME DATA is available. • DTC is stored in PCM memory.
POSSIBLE CAUSE	• ECT sensor malfunction • Poor connection of connectors • PCM malfunction

Diagnostic procedure

STEP	INSPECTION		ACTION
1	**VERIFY FREEZE FRAME DATA HAS BEEN RECORDED** • Has FREEZE FRAME DATA been recorded?	Yes	Go to next step.
		No	Record FREEZE FRAME DATA on repair order, then go to next step.
2	**VERIFY RELATED SERVICE INFORMATION AVAILABILITY** • Check for related Service Information availability. • Is any related Service Information available?	Yes	Perform repair or diagnosis according to available Service Information. • If vehicle is not repaired, go to next step.
		No	Go to next step.
3	**VERIFY CURRENT INPUT SIGNAL STATUS-IS CONCERN INTERMITTENT OR CONSTANT** • Start engine. • Warm up engine completely. • Access ECT PID using WDS or equivalent. • Is ECT PID **above 60 °C {140 °F}**?	Yes	Intermittent concern exists. Go to INTERMITTENT CONCERNS TROUBLESHOOTING procedure. (See F–227 INTERMITTENT CONCERN TROUBLESHOOTING.)
		No	Go to next step.
4	**INSPECT POOR CONNECTION OF ECT SENSOR CONNECTOR** • Turn ignition key to OFF. • Disconnect ECT sensor connector. • Inspect for poor connection (damaged, pulled-out pins, corrosion, etc.). • Are there any malfunctions?	Yes	Repair or replace terminal, then go to Step 7.
		No	Go to next step.

STEP	INSPECTION		ACTION
5	**INSPECT ECT SENSOR** • Inspect ECT sensor. (See F–53 ENGINE COOLANT TEMPERATURE (ECT) SENSOR INSPECTION.) • Is it okay?	Yes	Go to next step.
		No	Replace ECT sensor, then go to Step 7.
6	**INSPECT POOR CONNECTION OF PCM CONNECTOR** • Disconnect PCM connector. • Inspect for poor connection (damaged, pulled-out pins, corrosion, etc.). • Are there any malfunctions?	Yes	Repair or replace terminal, then go to next step.
		No	Go to next step.
7	**VERIFY TROUBLESHOOTING OF DTC P0125 COMPLETED** • Make sure to reconnect all disconnected connectors. • Clear DTC from PCM memory using WDS or equivalent. • Turn ignition key to ON (Engine OFF). • Access ECT PID using WDS or equivalent. • Wait until ECT PID **below 20 °C {68 °F}**. • Start engine and warm it up completely. • Is PENDING CODE the same as DTC stored?	Yes	Replace PCM, then go to next step. (See F–43 PCM REMOVAL/INSTALLATION.)
		No	Go to next step.
8	**VERIFY AFTER REPAIR PROCEDURE** • Perform “After Repair Procedure”. (See F–66 AFTER REPAIR PROCEDURE.) • Is there any DTC present?	Yes	Go to applicable DTC troubleshooting. (See F–67 DTC TABLE.)
		No	Troubleshooting completed.

DTC P0131, P0132

A6E397001084W22

DTC P0131 DTC P0132	**Front HO2S stuck low** **Front HO2S stuck high**
DETECTION CONDITION	• PCM monitors input voltage from front HO2S when the following monitoring conditions are met. If input voltage from sensor remains **below or above 0.45 V** for **41.2 s**, PCM determines that there is no front HO2S inversion. **MONITORING CONDITIONS** — Engine speed is **above 1,500 rpm**. — Engine coolant temperature is **above 80 °C {176°F}**. **Diagnostic support note** • This is a continuous monitor (CCM). • MIL illuminates if PCM detects the above malfunction condition in two consecutive drive cycles or in one drive cycle while the DTC for the same malfunction has been stored in the PCM. • PENDING CODE is available if PCM detects the above malfunction condition during first drive cycle. • FREEZE FRAME DATA is available. • DTC is stored in the PCM memory.
POSSIBLE CAUSE	• Front HO2S malfunction • Front HO2S heater malfunction • Fuel injector malfunction • Pressure regulator malfunction • Fuel pump malfunction • Fuel delivery hose clogging or leakage • Fuel filter clogging • Fuel return hose clogging or leakage • Air suction or leakage • PCV valve malfunction • Purge solenoid valve malfunction • Purge solenoid hoses are hooked up incorrectly. • Ignition coil malfunction • Insufficient compression • Engine malfunction

Diagnostic procedure

STEP	INSPECTION		ACTION
1	**VERIFY FREEZE FRAME DATA HAS BEEN RECORDED** • Has FREEZE FRAME DATA been recorded?	Yes	Go to next step.
		No	Record FREEZE FRAME DATA on repair order, then go to next step.

STEP	INSPECTION		ACTION
2	**VERIFY RELATED SERVICE INFORMATION AVAILABILITY** • Check for related Service Information availability. • Is any related Service Information available?	Yes	Perform repair or diagnosis according to available Service Information. • If vehicle is not repaired, go to next step.
		No	Go to next step.
3	**VERIFY RELATED PENDING AND STORED DTCs** • Turn ignition key to OFF, then ON (Engine OFF). • Verify pending and stored DTCs using WDS or equivalent. • Is other DTC present?	Yes	Go to appropriate DTC troubleshooting procedures.
		No	Go to next step.
4	**IDENTIFY TRIGGER DTC FOR FREEZE FRAME DATA** • Is DTC P0131 and P0132 on FREEZE FRAME DATA?	Yes	Go to next step.
		No	Go to troubleshooting procedures for DTC on FREEZE FRAME DATA.
5	**VERIFY CURRENT INPUT SIGNAL STATUS - IS CONCERN INTERMITTENT OR CONSTANT** • Warm-up engine. • Access O2S11 for P0131 and P0132 PID using WDS or equivalent. • Verify PID while racing engine (in PARK (ATX) or NEUTRAL (MTX)). • Is PID reading okay? — **More than 0.45 V** when suddenly depress accelerator pedal (rich condition) — **Less than 0.45 V** just after release of accelerator pedal (lean condition)	Yes	Go to next step.
		No	Replace front HO2S, then go to Step 19.
6	**INSPECT LONG TERM FUEL TRIM** • Access LONGFT1 for P0131 and P0132 PID using WDS or equivalent. • Compare it with FREEZE FRAME DATA recorded at Step1. • Was it decreased?	Yes	Engine is driven under rich condition. Go to next step.
		No	Engine is driven under lean condition. Go to step 9.
7	**INSPECT FUEL LINE PRESSURE (EXCESSIVE FUEL LINE PRESSURE)** • Turn ignition key to OFF. • Inspect fuel line pressure. (See F–20 FUEL LINE PRESSURE INSPECTION.) • Is fuel line pressure okay?	Yes	Go to next step.
		No	Inspect following parts and repair or replace if necessary: • Fuel pump maximum pressure • Fuel return pipe for clogged — If all items above are okay, replace pressure regulator. Then, go to Step 19.
8	**INSPECT PURGE SOLENOID VALVE FOR STUCK OPEN** • Turn ignition key to OFF. • Disconnect both hoses from purge solenoid valve. • Blow air through purge solenoid valve. • Does air blow through?	Yes	Replace purge solenoid valve.
		No	Go to Step 13.
9	**INSPECT PCV VALVE OPERATION** • Inspect PCV valve operation. (See F–41 PCV VALVE INSPECTION.) • Is PCV valve okay?	Yes	Go to next step.
		No	Replace PCV, then go to Step 19.
10	**INSPECT FUEL LINE PRESSURE (LOW FUEL LINE PRESSURE)** • Turn ignition key to OFF. • Inspect fuel line pressure. (See F–20 FUEL LINE PRESSURE INSPECTION.) • Is fuel line pressure okay?	Yes	Go to step 13.
		No	Go to next step.
11	**INSPECT FUEL PUMP MAXIMUM PRESSURE** • Stop engine. • Turn ignition key to ON (Engine OFF). • Perform fuel pump maximum pressure test. (See F–20 FUEL LINE PRESSURE INSPECTION.) • Is fuel pump maximum pressure okay?	Yes	Go to next step.
		No	Inspect fuel pump circuit for open or poor connection. • Repair or replace suspected circuit. • If circuit is okay, replace fuel pump. Then go to Step 19.

STEP	INSPECTION		ACTION
12	**INSPECT FUEL LINE FROM FUEL PUMP TO FUEL DELIVERY PUMP** • Visually inspect fuel line for any leakage. • Is any fuel leakage found?	Yes	Replace suspected fuel line, then go to Step 19.
		No	Inspect fuel filters for following: • Restriction or clogging at fuel filter (high-pressure side). • Foreign materials or stain inside fuel filter (low-pressure side) — If restriction or clogging is found at fuel filter (high-pressure side), replace fuel filter. — If foreign materials or stain is found inside fuel filter (low-pressure side), clean of fuel tank and filter. — If all items above are okay, replace pressure regulator. Then, go to Step 19.
13	**CHECK IGNITION COIL OPERATION** • Perform spark test. (See F–232 Spark Test) • Do all cylinders show blinking condition?	Yes	Go to step 16.
		No	Go to next step.
14	**INSPECT POWER SUPPLY TERMINAL AT IGNITION COIL CONNECTOR** • Disconnect ignition coil connector. • Turn ignition key to ON (Engine OFF). • Measure voltage between ignition coil connector terminal D (harness-side) and body ground. • Is the voltage reading **B+**?	Yes	Go to next step.
		No	Check for open circuit between ignition coil connector and ignition switch. Repair or replace wiring harness, then go to Step 19.
15	**INSPECT IGNITION COIL RESISTANCE** • Check ignition coil resistance. (See G–9 IGNITION COIL INSPECTION.) • Is coil resistance okay?	Yes	Go to next step.
		No	Replace ignition coil, then go to Step 19.
16	**INSPECT ENGINE COMPRESSION** • Inspect engine compression. (See B–9 COMPRESSION INSPECTION.) • Is it okay?	Yes	Go to next step.
		No	Implement engine overhaul for repairs, then go to next step.
17	**INSPECT FUEL INJECTOR OPERATION** • Turn ignition key to OFF. • Inspect injector. (See F–31 FUEL INJECTOR INSPECTION.) • Is injector okay?	Yes	Go to next step.
		No	Replace injector, then go to Step 19.
18	**INSPECT SEALING OF ENGINE COOLANT PASSAGE** **Warning** • **Removing radiator cap when radiator is hot is dangerous. Scalding coolant and steam may shoot out and cause serious injury.** • **When removing radiator cap, wrap a thick cloth around and turn it slowly.** • Remove radiator cap. • Implement procedure to bleed air from engine coolant, then run engine at idle. • Is there any small bubble, which makes engine coolant white at filling opening? **Note** • Large bubbles are normal since they are remaining air coming out from engine coolant passage.	Yes	Air gets in from poor sealing to head gasket or other areas between combustion chamber and engine coolant passage. Repair or replace faulty parts, then go to next step.
		No	Go to next step.

F

STEP	INSPECTION		ACTION
19	**VERIFY TROUBLESHOOTING OF DTC P0131 or P0132 COMPLETED** • Make sure to reconnect all disconnected connectors. • Turn ignition key to ON (Engine OFF). • Clear DTC from memory using WDS or equivalent. • Start engine. • Access ECT and RPM PIDs using WDS or equivalent. • Make sure that ECT PID is **above 80 °C {176 °F}**. • Increase and keep engine speed **above 1,500 rpm** for at **least 1 min**. • Is pending code the same as DTC present?	Yes	Replace PCM, then go to next step. (See F–43 PCM REMOVAL/INSTALLATION.)
		No	Go to next step.
20	**VERIFY AFTER REPAIR PROCEDURE** • Perform “After Repair Procedure”. (See F–66 AFTER REPAIR PROCEDURE.) • Is there any DTC present?	Yes	Go to applicable DTC troubleshooting. (See F–67 DTC TABLE.)
		No	Troubleshooting completed.

DTC P0133

A6E397001084W23

DTC P0133	Front HO2S circuit malfunction
DETECTION CONDITION	• PCM monitors inversion cycle period, lean-to-rich response time and rich-to-lean response time of the sensor. PCM calculates the average of the inversion cycle period-specified inversion cycles, average response time from lean-to-rich, and from rich-to-lean when following conditions are met. If any exceeds threshold, PCM determines that circuit has malfunction. **MONITORING CONDITIONS** — Drive mode 3 — Following conditions are met: • Calculation load **14.8—59.4 %** (at **2,000 rpm**). • Engine speed **1,410—4,000 rpm** (MTX) • Engine speed **1,190—4,000 rpm** (ATX) • Vehicle speed is above **3.76 km/h** • Engine coolant temperature is **above -10 °C {14 °F}** • Front HO2S signal inversion cycle is **above 10 cycles** **Diagnostic support note** • This is an intermittent monitor. (OXYGEN SENSOR) • MIL illuminates if PCM detects the above malfunction condition in two consecutive drive cycles or in one drive cycle while the DTC for the same malfunction has been stored in the PCM. • DIAGNOSTIC MONITORING TEST RESULTS is available. • PENDING CODE is available if PCM detects the above malfunction condition during first drive cycle. • FREEZE FRAME DATA is available. • DTC is stored in the PCM memory.
POSSIBLE CAUSE	• Front HO2S deterioration • Front HO2S heater malfunction • Pressure regulator malfunction • Fuel pump malfunction • Fuel filter clogged or restricted • Fuel leakage on fuel line from fuel distribution pipe and fuel pump • Leakage exhaust system • Purge solenoid valve malfunction • Purge solenoid hoses improper connection • Insufficient compression • Engine malfunction

Diagnostic procedure

STEP	INSPECTION		ACTION
1	**VERIFY FREEZE FRAME DATA HAS BEEN RECORDED** • Has FREEZE FRAME DATA been recorded?	Yes	Go to next step.
		No	Record FREEZE FRAME DATA on repair order, then go to next step.
2	**VERIFY RELATED SERVICE INFORMATION AVAILABILITY** • Check for related Service Information availability. • Is any related Service Information available?	Yes	Perform repair or diagnosis according to available Service Information. • If vehicle is not repaired, go to next step.
		No	Go to next step.

STEP	INSPECTION		ACTION
3	**VERIFY RELATED PENDING AND STORED DTCS** • Turn ignition key to OFF, then ON (Engine OFF). • Verify pending and /or stored DTCs using WDS or equivalent. • Is DTC P0443 also present?	Yes	Go to DTC P0443 troubleshooting procedures, then go to Step 13.
		No	Go to next step.
4	**IDENTIFY TRIGGER DTC FOR FREEZE FRAME DATA** • Is DTC P0133 on FREEZE FRAME DATA?	Yes	Go to next step.
		No	Go to troubleshooting procedures for DTC on FREEZE FRAME DATA. (See F–67 DTC TABLE.)
5	**VERIFY CURRENT INPUT SIGNAL STATUS** • Warm up engine. • Access O2S11 PID using WDS or equivalent. • Inspect PID under following accelerator pedal conditions (in PARK (ATX) or NEUTRAL (MTX)). • Is PID reading okay? — **More than 0.55 V** when suddenly depress accelerator pedal (rich condition). — **Less than 0.55 V** just after release of accelerator pedal (lean condition).	Yes	Go to step 8.
		No	Go to next step.
6	**INSPECT INSTALLATION OF FRONT HO2S** • Inspect if front HO2S is loosely installed. • Is sensor installed securely?	Yes	Go to next step.
		No	Retighten sensor, then go to Step 13.
7	**INSPECT GAS LEAKAGE FROM EXHAUST SYSTEM** • Visually check if any gas leakage is found between exhaust manifold and front HO2S. • Is there any gas leakage?	Yes	Repair or replace any faulty exhaust parts, then go to Step 13.
		No	Replace sensor, then go to Step 13.
8	**INSPECT LONG TERM FUEL TRIM** • Access LONGFT1 PIDs • Compare it with FREEZE FRAME DATA recorded at Step 1. • Is it below FFD value?	Yes	Engine is driven under rich condition. Go to next step.
		No	Engine is driven under lean condition. Go to step 10.
9	**INSPECT FUEL LINE PRESSURE (Excessive fuel line pressure)** • Turn ignition key to OFF. • Inspect fuel line pressure while engine running. (See F–20 FUEL LINE PRESSURE INSPECTION.) • Is fuel line pressure okay?	Yes	Go to next step.
		No	Inspect fuel pump maximum pressure and fuel return pipe for clogging. (See F–25 FUEL PUMP UNIT INSPECTION.) • If any problem is found, repair or replace suspected parts. • If all items above are okay, replace fuel pump unit. Then go to Step 13.
10	**INSPECT FUEL LINE PRESSURE (Low fuel line pressure)** • Turn ignition key to OFF. • Inspect fuel line pressure while engine running. (See F–20 FUEL LINE PRESSURE INSPECTION.) • Is fuel line pressure okay?	Yes	Go to step 13.
		No	Go to next step.
11	**INSPECT FUEL LINE FROM FUEL PUMP TO FUEL DELIVERY PIPE** • Visually inspect fuel line for any leakage. • Is any fuel leakage found?	Yes	Replace suspected fuel line, then go to Step 13.
		No	Inspect fuel filters for following: • Restriction or clogging at fuel filter (high-pressure side) • Foreign materials or stain inside fuel filter (low-pressure side) Perform following actions according to result. • If restriction or clogging is found at fuel filter (high-pressure side), replace fuel filter. • If foreign material or stain is found inside fuel filter (low-pressure side), clean of fuel tank and filter. • If all items above are okay, replace pressure regulator. Then go to Step 13.

F

STEP	INSPECTION		ACTION
12	**INSPECT SEALING OF ENGINE COOLANT PASSAGE** **Warning** • **Removing radiator cap when radiator is hot is dangerous. Scalding coolant and steam may shoot out and cause serious injury.** • **When removing radiator cap, wrap a thick cloth around and turn it slowly.** • Remove radiator cap. • Implement procedure to bleed air from engine coolant, then run engine at idle. • Is there any small bubble, which makes engine coolant white at filling opening? **Note** • Large bubbles are normal since they are remaining air coming out from engine coolant passage.	Yes	Air gets in from poor sealing on head gasket or other areas between combustion chamber and engine coolant passage. Repair or replace faulty parts, then go to next step.
		No	Go to next step.
13	**VERIFY TROUBLESHOOTING OF DTC P0133 COMPLETED** • Make sure to reconnect all disconnected connectors. • Turn ignition switch to ON (Engine OFF) • Clear DTC from memory using WDS or equivalent generic OBD function. • Run OBD drive mode. • Is PENDING CODE the same as DTC present?.	Yes	Replace PCM, then go to next step. (See F–43 PCM REMOVAL/INSTALLATION.)
		No	Go to next step.
14	**VERIFY AFTER REPAIR PROCEDURE** • Perform “After Repair Procedure”. (See F–66 AFTER REPAIR PROCEDURE.) • Is there any DTC present?	Yes	Go to applicable DTC troubleshooting. (See F–67 DTC TABLE.)
		No	Troubleshooting completed.

DTC P0134

A6E397001084W24

DTC P0134	Front HO2S circuit no activity detected
DETECTION CONDITION	• PCM monitors input voltage from front HO2S when the following conditions are met. If input voltage from sensor never **exceed 0.55 V** for **83.2 s**, PCM determines that sensor circuit is not activated. **MONITORING CONDITIONS** — HO2S, HO2S heater and TWC repair verification drive mode — Following conditions are met • Engine speed is **above 1,500 rpm**. • Engine coolant temperature is **above 80 °C {176 °F}**. **Diagnostic support note** • This is a continuous monitor (CCM). • MIL illuminates if PCM detects the above malfunction condition in two consecutive drive cycles or in one drive cycle while the DTC for the same malfunction has been stored in the PCM. • PENDING CODE is available if PCM detects the above malfunction condition during first drive cycle. • FREEZE FRAME DATA is available. • DTC is stored in the PCM memory.
POSSIBLE CAUSE	• Front HO2S deterioration • Front HO2S heater malfunction • Leakage exhaust system • Open or short to ground circuit between front HO2S terminal A and PCM terminal 1AB • Insufficient compression • Engine malfunction

DTC P0134	Front HO2S circuit no activity detected

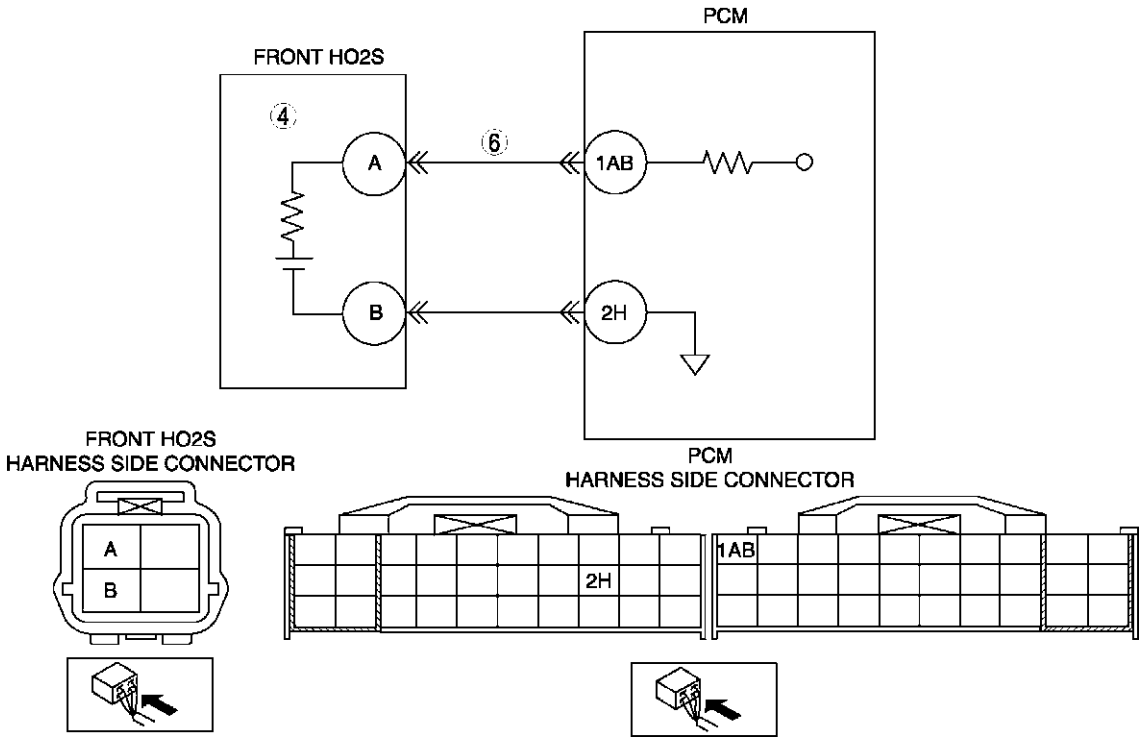

Diagnostic procedure

STEP	INSPECTION		ACTION
1	**PERFORM DTC CONFIRMATION PROCEDURE** • Perform DTC CONFIRMATION PROCEDURE. (See F–66 DTC CONFIRMATION PROCEDURE.) • Is same DTC present?	Yes	Go to next step.
		No	Intermittent concern exists. Go to INTERMITTENT CONCERN TROUBLESHOOTING procedure. (See F–227 INTERMITTENT CONCERN TROUBLESHOOTING.)
2	**VERIFY RELATED PENDING AND STORED DTCS** **Note** • If fuel monitor DTC, DTC P0131or P0132 is retrieved, ignore it until P0134 is fixed. • Turn ignition key to OFF, then ON (Engine OFF). • Verify pending and stored DTCs using WDS or equivalent. • Is other DTC present?	Yes	Go to appropriate DTC troubleshooting procedures.
		No	Go to next step.
3	**IDENTIFY TRIGGER DTC FOR FREEZE FRAME DATA** • Is DTC P0134 on FREEZE FRAME DATA?	Yes	Go to next step.
		No	Go to troubleshooting procedures for DTC on FREEZE FRAME DATA. (See F–67 DTC TABLE.)
4	**VERIFY CURRENT INPUT SIGNAL STATUS** • Warm up engine. • Access O2S11 PID using WDS or equivalent. • Verify PID while racing engine (in NEUTRAL (MTX) or PARK (ATX)). • Is PID reading okay? — **More than 0.55 V** when suddenly depress accelerator pedal (rich condition). — **Less than 0.55 V** just after release of accelerator pedal (lean condition)	Yes	Go to step 7.
		No	Go to next step.
5	**INSPECT INSTALLATION OF FRONT HO2S** • Check if front HO2S is loosely installed. • Is sensor installed securely?	Yes	Go to next step.
		No	Install sensor securely, then go to Step 9.

STEP	INSPECTION		ACTION
6	**INSPECT GAS LEAKAGE FROM EXHAUST SYSTEM** • Visually check if any gas leakage is found between exhaust manifold and front HO2S. • Is there any gas leakage?	Yes	Repair or replace any faulty exhaust parts, then go to Step 9.
		No	• Inspect the following harnesses for open or short to ground circuit, repair or replace harness if necessary — Front HO2S terminal A (harness-side) to PCM terminal 1AB (harness-side) • Repair or replace harness if necessary. • If all items above are okay, replace faulty sensor. Then go to Step 9.
7	**INSPECT SEALING OF ENGINE COOLANT PASSAGE** **Warning** • **Removing radiator cap when radiator is hot is dangerous. Scalding coolant and steam may shoot out and cause serious injury.** • **When removing radiator cap, wrap a thick cloth around and turn it slowly.** • Remove radiator cap. • Implement procedure to bleed air from engine coolant, then run engine at idle. • Is there any small bubble, which makes engine coolant white at filling opening? **Note** • Large bubbles are normal since they are remaining air coming out from engine coolant passage.	Yes	Air gets in from poor sealing on head gasket or other areas between combustion chamber and engine coolant passage. Repair or replace faulty parts, then go to Step 9.
		No	Go to next step.
8	**INSPECT ENGINE COMPRESSION** • Inspect engine compression. (See B–9 COMPRESSION INSPECTION.) • Is it okay?	Yes	Go to next step.
		No	Implement engine overhaul for repairs, then go to next step.
9	**VERIFY TROUBLESHOOTING OF DTC P0134 COMPLETED** • Make sure to reconnect all disconnected connectors. • Turn ignition key to ON (Engine OFF). • Clear DTC from memory using WDS or equivalent. • Perform KOER self-test. (See F–66 KOEO/KOER SELF-TEST.) • Is same DTC present?	Yes	Replace PCM, then go to next step. (See F–43 PCM REMOVAL/INSTALLATION.)
		No	Go to next step.
10	**VERIFY AFTER REPAIR PROCEDURE** • Perform “After Repair Procedure”. (See F–66 AFTER REPAIR PROCEDURE.) • Is there any DTC present?	Yes	Go to applicable DTC troubleshooting. (See F–67 DTC TABLE.)
		No	Troubleshooting completed.

DTC P0138

A6E397001084W25

DTC P0138	Rear HO2S circuit high input
DETECTION CONDITION	• PCM monitors input voltage from rear HO2S. If input voltage from rear HO2S sensor is **above 0.45 V** for **7 s** during deceleration fuel cut, PCM determines that circuit input is high. **Diagnostic support note** • This is a continuous monitor (CCM). • MIL illuminates if PCM detects the above malfunction condition in two consecutive drive cycles or in one drive cycle while the DTC for the same malfunction has been stored in the PCM. • PENDING CODE is available if PCM detects the above malfunction condition during first drive cycle. • FREEZE FRAME DATA is available. • DTC is stored in the PCM memory.
POSSIBLE CAUSE	• Rear HO2S malfunction • Short to power circuit in wiring between rear HO2S terminal A and PCM terminal 1Y

DTC P0138	Rear HO2S circuit high input

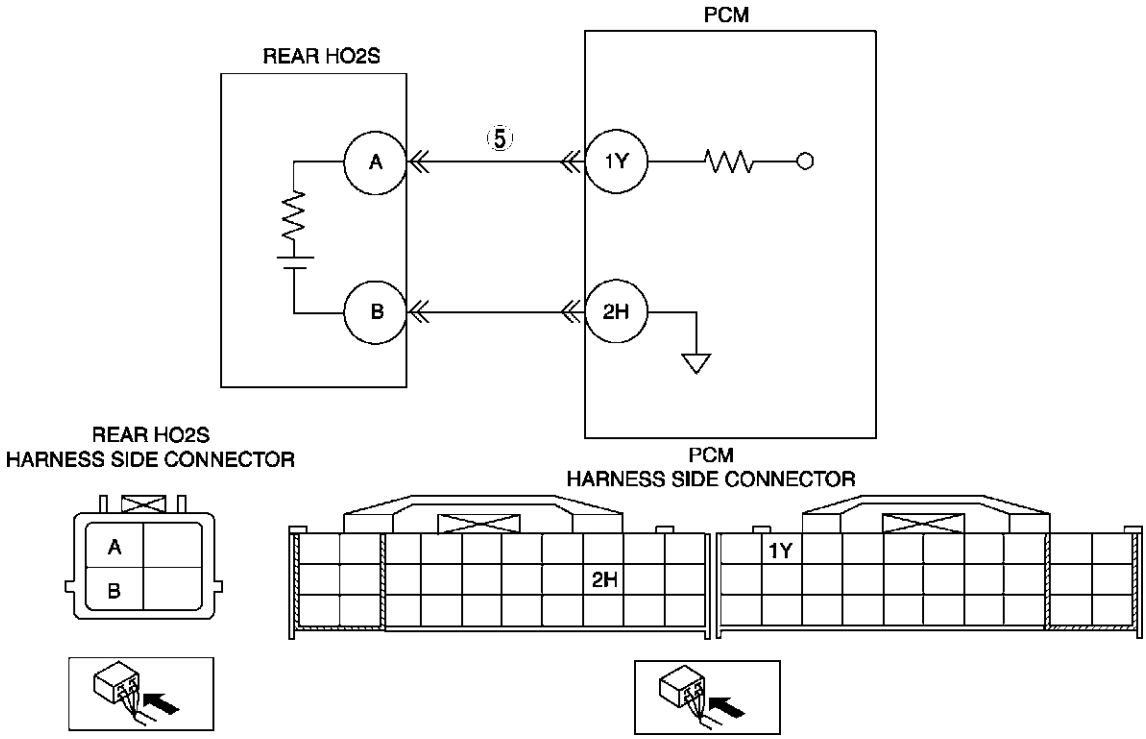

F

Diagnostic procedure

STEP	INSPECTION		ACTION
1	**VERIFY FREEZE FRAME DATA HAS BEEN RECORDED** • Has FREEZE FRAME DATA been recorded?	Yes	Go to next step.
		No	Record FREEZE FRAME DATA on repair order, then go to next step.
2	**VERIFY RELATED SERVICE INFORMATION AVAILABILITY** • Check for related Service Information availability. • Is any related Service Information available?	Yes	Perform repair or diagnosis according to available Service Information. • If vehicle is not repaired, go to next step.
		No	Go to next step.
3	**VERIFY RELATED PENDING OR STORED DTCS** • Turn ignition key to OFF, then ON (Engine OFF). • Verify pending code or stored DTCs using WDS or equivalent. • Is other DTC present?	Yes	Go to appropriate DTC troubleshooting procedures. (See F–67 DTC TABLE.)
		No	Go to next step.
4	**IDENTIFY TRIGGER DTC FOR FREEZE FRAME DATA** • Is DTC P0138 on FREEZE FRAME DATA?	Yes	Go to next step.
		No	Go to troubleshooting procedures for DTC on FREEZE FRAME DATA. (See F–67 DTC TABLE.)
5	**INSPECT REAR HO2S SIGNAL CIRCUIT FOR SHORT TO POWER SUPPLY CIRCUIT** • Turn ignition key to OFF. • Disconnect rear HO2S connector. • Turn ignition key to ON (Engine OFF). • Measure voltage between rear HO2S terminal A (harness-side) and body ground. • Is any voltage reading?	Yes	Replace short to power supply circuit, then go to Step 7.
		No	Go to next step.
6	**VERIFY CURRENT INPUT SIGNAL STATUS** • Start engine. • Access O2S12 PID using WDS or equivalent. • Verify PID while racing engine at least **10 times** (in NEUTRAL (MTX) or PARK (ATX)). • Does PID reading stay **above 0.45 V**?	Yes	Repair or replace sensor, then go to next step.
		No	Go to next step.

STEP	INSPECTION		ACTION
7	**VERIFY TROUBLESHOOTING OF DTC P0138 COMPLETED** • Make sure to reconnect all disconnected connectors. • Turn ignition key to ON (Engine OFF). • Clear DTC from memory using WDS or equivalent. • Run PCM adaptive memory procedure drive mode and HO2S heater, HO2S, and TWC repair verification drive mode. (See F–64 OBD DRIVE MODE.) • Is PENDING CODE the same as DTC present?	Yes	Replace PCM, then go to next step. (See F–43 PCM REMOVAL/INSTALLATION.)
		No	Go to next step.
8	**VERIFY AFTER REPAIR PROCEDURE** • Perform “After Repair Procedure”. (See F–66 AFTER REPAIR PROCEDURE.) • Is there any DTC present?	Yes	Go to applicable DTC troubleshooting. (See F–67 DTC TABLE.)
		No	Troubleshooting completed.

DTC P0140

A6E397001084W26

DTC P0140	Rear HO2S circuit no activity detected
DETECTION CONDITION	• PCM monitors input voltage from rear HO2S when the following conditions are met. If input voltage from sensor never **exceed 0.55 V** for **30.4 s**, PCM determines that sensor circuit is not activated. **MONITORING CONDITIONS** — HO2S, HO2S heater and TWC repair verification drive mode — Following conditions are met: • Engine speed is **above 1,500 rpm**. • Engine coolant temperature is **above 80 °C {158 °F}**. **Diagnostic support note** • This is a continuous monitor (CCM). • MIL illuminates if PCM detects the above malfunction condition in two consecutive drive cycles or in one drive cycle while the DTC for the same malfunction has been stored in the PCM. • PENDING CODE is available if PCM detects the above malfunction condition during first drive cycle. • FREEZE FRAME DATA is available. • DTC is stored in the PCM memory.
POSSIBLE CAUSE	• Rear HO2S deterioration • Rear HO2S heater malfunction • Leakage exhaust system • Open or short to ground circuit between rear HO2S terminal A and PCM terminal 1Y • Insufficient compression • Engine malfunction

DTC P0140	Rear HO2S circuit no activity detected

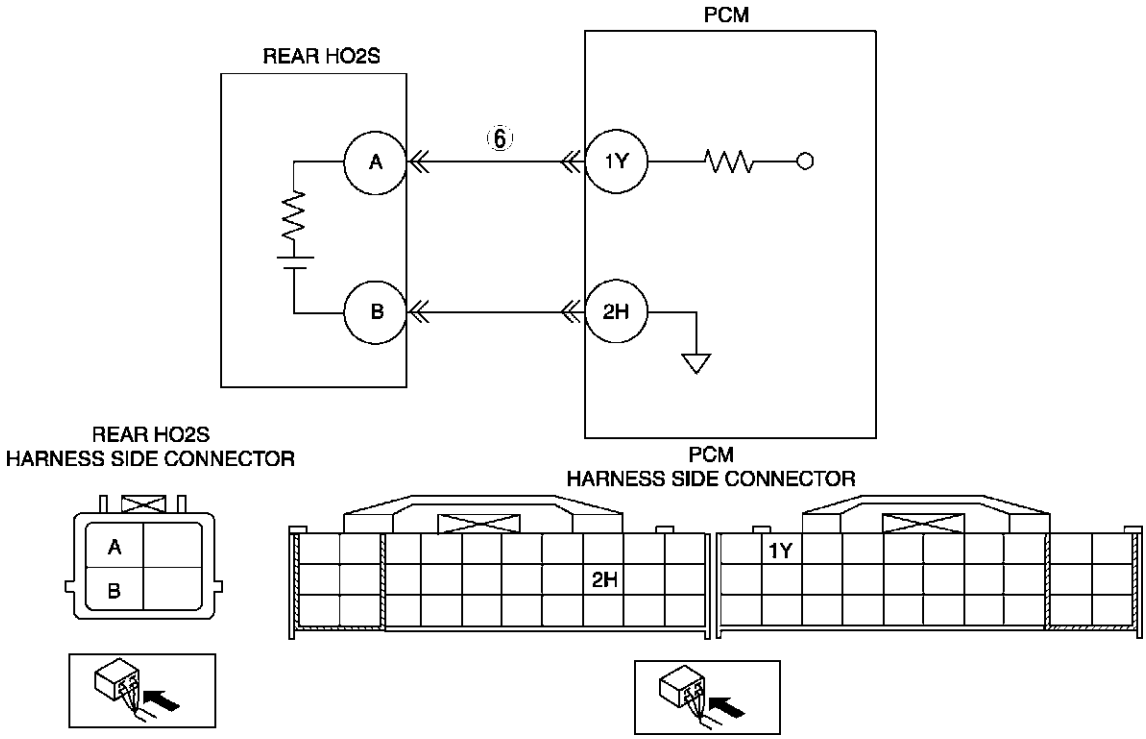

F

Diagnostic procedure

STEP	INSPECTION		ACTION
1	**PERFORM DTC CONFIRMATION PROCEDURE** • Perform DTC CONFIRMATION PROCEDURE. (See F–66 DTC CONFIRMATION PROCEDURE.) • Is same DTC present?	Yes	Go to next step.
		No	Intermittent concern exists. Go to INTERMITTENT CONCERN TROUBLESHOOTING procedure. (See F–227 INTERMITTENT CONCERN TROUBLESHOOTING.)
2	**VERIFY RELATED PENDING AND STORED DTCS** **Note** • If fuel monitor DTC, DTC P0131or P0132 is retrieved, ignore it until P0140 is fixed. • Turn ignition key to OFF, then ON (Engine OFF). • Verify pending and stored DTCs using WDS or equivalent. • Is other DTC present?	Yes	Go to appropriate DTC troubleshooting procedures. (See F–67 DTC TABLE.)
		No	Go to next step.
3	**IDENTIFY TRIGGER DTC FOR FREEZE FRAME DATA** • Is DTC P0140 on FREEZE FRAME DATA?	Yes	Go to next step.
		No	Go to troubleshooting procedures for DTC on FREEZE FRAME DATA. (See F–67 DTC TABLE.)
4	**VERIFY CURRENT INPUT SIGNAL STATUS** • Warm up engine. • Access O2S12 for P0140 or O2S22 for P0160 PID using WDS or equivalent. • Verify PID while racing engine at least **10 times** (in NEUTRAL (MTX) or PARK (ATX)). • Is PID reading okay? — **More than 0.55 V** at least once during engine racing.	Yes	Go to step 7.
		No	Go to next step.
5	**INSPECT INSTALLATION OF REAR HO2S** • Check if rear HO2S is loosely installed. • Is sensor installed securely?	Yes	Go to next step.
		No	Install sensor securely, then go to Step 9.

STEP	INSPECTION		ACTION
6	**INSPECT GAS LEAKAGE FROM EXHAUST SYSTEM** • Visually check if any gas leakage is found between exhaust pipe and rear HO2S. • Is there any gas leakage?	Yes	Repair or replace any faulty exhaust parts, then go to Step 9.
		No	• Inspect the following harnesses for open or short to ground circuit, repair or replace harness if necessary. — Rear HO2S terminal A (harness-side) to PCM terminal 1Y (harness-side) • Repair or replace harness if necessary. • If all items above are okay, replace faulty sensor. Then go to Step 9.
7	**INSPECT SEALING OF ENGINE COOLANT PASSAGE** **Warning** • **Removing radiator cap when radiator is hot is dangerous. Scalding coolant and steam may shoot out and cause serious injury.** • **When removing radiator cap, wrap a thick cloth around and turn it slowly.** • Remove radiator cap. • Implement procedure to bleed air from engine coolant, then run engine at idle. • Is there any small bubble, which makes engine coolant white at filling opening? **Note** • Large bubbles are normal since they are remaining air coming out from engine coolant passage.	Yes	Air gets in from poor sealing on head gasket or other areas between combustion chamber and engine coolant passage. Repair or replace faulty parts, then go to Step 9.
		No	Go to next step.
8	**INSPECT ENGINE COMPRESSION** • Inspect engine compression. (See B–9 COMPRESSION INSPECTION.) • Is it okay?	Yes	Go to next step.
		No	Implement engine overhaul for repairs, then go to next step.
9	**VERIFY TROUBLESHOOTING OF DTC P0140 COMPLETED** • Make sure to reconnect all disconnected connectors. • Turn ignition key to ON (Engine OFF). • Clear DTC from memory using WDS or equivalent. • Perform KOER self-test. (See F–66 KOEO/KOER SELF-TEST.) • Is same DTC present?	Yes	Replace PCM, then go to next step. (See F–43 PCM REMOVAL/INSTALLATION.)
		No	Go to next step.
10	**VERIFY AFTER REPAIR PROCEDURE** • Perform “After Repair Procedure”. (See F–66 AFTER REPAIR PROCEDURE.) • Is there any DTC present?	Yes	Go to applicable DTC troubleshooting. (See F–67 DTC TABLE.)
		No	Troubleshooting completed.

DTC P0171

A6E397001084W27

DTC P0171	Fuel trim system too lean
DETECTION CONDITION	• PCM monitors short term fuel trim (SHRTFT) and long term fuel trim (LONGFT) values during closed loop fuel control. If fuel trim exceeds preprogrammed criteria, PCM determines that fuel system is too lean. **Diagnostic support note** • This is a continuous monitor. (FUEL SYSTEM) • MIL illuminates if PCM detects the above malfunction condition in two consecutive drive cycles or in one drive cycle while the DTC for the same malfunction has been stored in the PCM. • PENDING CODE is available if PCM detects the above malfunction conditions during first drive cycle. • FREEZE FRAME DATA is available. • DTC is stored in the PCM memory.

DTC P0171	Fuel trim system too lean
POSSIBLE CAUSE	• Misfire • Front HO2S deterioration • Front HO2S heater malfunction • Pressure regulator malfunction • Fuel pump malfunction • Fuel filter clogged or restricted • Fuel leakage on fuel line from fuel delivery pipe and fuel pump • Fuel return hose clogged • Leakage exhaust system • Purge solenoid valve malfunction • Purge solenoid hoses improper connection • Insufficient compression • Variable valve timing control system improper operation (L3-VE)

Diagnostic procedure

STEP	INSPECTION		ACTION
1	**PERFORM DTC CONFIRMATION PROCEDURE** • Perform DTC CONFIRMATION PROCEDURE. (See F–66 DTC CONFIRMATION PROCEDURE.) • Is same DTC present?	Yes	Go to next step.
		No	Intermittent concern exists. Go to INTERMITTENT CONCERN TROUBLESHOOTING procedure. (See F–227 INTERMITTENT CONCERN TROUBLESHOOTING.)
2	**VERIFY RELATED PENDING CODE OR STORED DTCS** • Turn ignition key to OFF, then ON (Engine OFF). • Verify related PENDING CODE or stored DTCs. • Is other DTCs present?	Yes	If misfire DTC is present, go to step 7. If other DTC is present, go to appropriate DTC troubleshooting procedures. (See F–67 DTC TABLE.)
		No	If drive ability concern is present, go to Step 7. If not, go to next step.
3	**IDENTIFY TRIGGER DTC FOR FREEZE FRAME DATA** • Is DTC P0171 on FREEZE FRAME DATA?	Yes	Go to next step.
		No	Go to troubleshooting procedures for DTC on FREEZE FRAME DATA.
4	**VERIFY CURRENT INPUT SIGNAL STATUS (IGNITION KEY TO ON/IDLE)** • Access ECT, MAF, TP and VSS PIDs using WDS or equivalent. (See F–45 PCM INSPECTION.) • Is there any signal that is far out of specification when ignition key is ON and engine runs?	Yes	Inspect suspected sensor and excessive resistance in related wiring harnesses. Repair or replace if necessary. Then go to Step 18.
		No	Go to next step.
5	**VERIFY CURRENT INPUT SIGNAL STATUS UNDER TROUBLE CONDITION** • Inspect same PIDs as Step 4 while simulating FREEZE FRAME DATA condition. • Is there any input signal which causes drastic changes?	Yes	Inspect suspected sensor and related wiring harnesses, and repair or replace it. Then go to Step 18.
		No	Go to next step.
6	**VERIFY CURRENT INPUT SIGNAL STATUS OF FRONT HO2S** • Access O2S11 for P0171 PID using WDS or equivalent. • Check PID under following accelerator pedal condition (in PARK (ATX) or NEUTRAL (MTX)). • Is PID reading okay? — **Above 0.55 V** when accelerator pedal is suddenly depressed (rich condition). — **Below 0.55 V** just after release of accelerator pedal (lean condition)	Yes	Inspect for air suction at followings due to cracks, damages and loosening parts: • From air cleaner to throttle body • From throttle body to dynamic chamber • From dynamic chamber to intake manifold • Vacuum hoses **Note** • Engine speed may change when rust penetrating agent is sprayed on the air suction area. Repair or replace any faulty part, then go to Step 18.
		No	Visually inspect for any gas leakage between exhaust manifold and front HO2S. • If there is no leakage, replace FRONT HO2S. Then go to Step 18.

STEP	INSPECTION		ACTION
7	**INSPECT MAF PID** • Start engine. • Access MAF PID using WDS or equivalent. • Verify that MAF PID changes quickly according to race engine RPM. • Is MAF PID response okay?	Yes	Go to next step.
		No	Replace Mass air flow sensor, then go to Step 18.
8	**INSPECT FOR EXCESSIVE AIR SUCTION OF INTAKE AIR SYSTEM** • Visually inspect for loosen, cracks or damages hoses on intake air system. • Is there any malfunction?	Yes	Repair or replace source of air suction, then go to Step 18.
		No	Go to next step.
9	**INSPECT FUEL LINE PRESSURE** • Turn ignition key to OFF. **Note** • If engine won't start, inspect fuel line pressure with ignition key ON. • Inspect fuel line pressure while engine running. (See F–20 FUEL LINE PRESSURE INSPECTION.) • Is fuel line pressure okay?	Yes	Go to step 11.
		No	• If fuel line pressure is too high: Replace fuel pump unit, then go to Step 18. • If fuel line pressure is too low: Go to next step.
10	**INSPECT FUEL LINE FROM FUEL PUMP TO FUEL DELIVERY PIPE** • Visually inspect fuel line for any leakage. • Is any fuel leakage found?	Yes	Replace suspected fuel line, then go to Step 18.
		No	Inspect fuel filters for follows: • Restriction or clogging at fuel filter (high-pressure side). • Foreign materials or stain inside fuel filter (low-pressure side) Perform following actions as result. • If restriction or clogging is found at fuel filter (high-pressure side), replace fuel pump unit. • If foreign materials or stain is found inside fuel filter (low-pressure side), clean of fuel tank and filter. • If all items above are okay, replace fuel pump unit. Then go to Step 18.
11	**CHECK IGNITION COIL OPERATION AND HIGH-TENSION LEAD WITH TIMING LIGHT** • Verify blinking condition on each cylinders using timing light at idle. • Do all cylinders show blinking condition?	Yes	Go to Step 15.
		No	Go to next step.
12	**CHECK HIGH-TENSION LEADS OF NO BLINKING CYLINDER** • Turn ignition key to OFF. • Inspect high-tension leads for installation condition, corrosion on terminal, open lead and damaged cover. • Is condition of high-tension lead okay?	Yes	Go to next step.
		No	Replace faulty high-tension lead, then go to Step 18.
13	**INSPECT POWER SUPPLY TERMINAL AT IGNITION COIL CONNECTOR** • Disconnect ignition coil connector. • Turn ignition key to ON (Engine OFF). • Check voltage at ignition coil connector terminal B (harness-side) and body ground. • Is voltage **B+**?	Yes	Go to next step.
		No	Check for open circuit between ignition coil connector and ignition switch. Repair or replace wiring harness, then go to Step 18.
14	**INSPECT IGNITION COIL RESISTANCE** • Check ignition coil resistance. (See G–9 IGNITION COIL INSPECTION.) • Is coil resistance okay?	Yes	Go to next step.
		No	Replace ignition coil, then go to Step 18.
15	**INSPECT ENGINE COMPRESSION** • Inspect engine compression. (See B–9 COMPRESSION INSPECTION.) • Is it okay?	Yes	Go to next step.
		No	Implement engine overhaul for repairs, then go to Step 18.

STEP	INSPECTION		ACTION
16	**INSPECT VARIABLE VALVE TIMING CONTROL SYSTEM OPERATION** **Note** • The following test should be performed for variable valve timing control system. Go to next step for vehicles without variable valve timing control system. • Inspect variable valve timing control system operation. (See F–239 Variable Valve Timing Control System Operation Inspection.) • Does variable valve timing control system work properly?	Yes	Go to next step.
		No	Repair or replace malfunctioning part according to variable valve timing control system inspection results, then go to Step 18.
17	**INSPECT FUEL INJECTOR OPERATION** • Remove fuel injector. • Inspect injector operation. • Is fuel injector okay?	Yes	Go to next step.
		No	Replace injector, then go to next step.
18	**VERIFY TROUBLESHOOTING OF DTC P0171 COMPLETED** • Make sure to reconnect all disconnected connectors. • Clear DTC from PCM memory using WDS or equivalent. • Perform KOER self-test. (See F–66 KOEO/KOER SELF-TEST.) • Is same DTC present?	Yes	Replace PCM, then go to next step. (See F–43 PCM REMOVAL/INSTALLATION.)
		No	Go to next step.
19	**VERIFY AFTER REPAIR PROCEDURE** • Perform “After Repair Procedure”. (See F–66 AFTER REPAIR PROCEDURE.) • Is there any DTC present?	Yes	Go to applicable DTC troubleshooting. (See F–67 DTC TABLE.)
		No	Troubleshooting completed.

DTC P0172

A6E397001084W28

DTC P0172	Fuel trim system too rich
DETECTION CONDITION	• PCM monitors short fuel trim (SHRTFT) and long fuel trim (LONGFT) values during closed loop fuel control. If fuel trim exceeds preprogrammed criteria, PCM determines that fuel system is too rich. **Diagnostic support note** • This is a continuous monitor. (FUEL SYSTEM) • MIL illuminates if PCM detects the above malfunction condition in two consecutive drive cycles or in one drive cycle while the DTC for the same malfunction has been stored in the PCM. • PENDING CODE is available if PCM detects the above malfunction condition during first drive cycle. • FREEZE FRAME DATA is available. • DTC is stored in the PCM memory.
POSSIBLE CAUSE	• Misfire • Front HO2S deterioration • Front HO2S heater malfunction • Pressure regulator malfunction • Fuel pump malfunction • Fuel return hose clogged • Purge solenoid valve malfunction • Purge solenoid hoses improper connection • PCV valve malfunction

Diagnostic procedure

STEP	INSPECTION		ACTION
1	**PERFORM DTC CONFIRMATION PROCEDURE** • Perform DTC CONFIRMATION PROCEDURE. (See F–66 DTC CONFIRMATION PROCEDURE.) • Is same DTC present?	Yes	Go to next step.
		No	Intermittent concern exists. Go to INTERMITTENT CONCERN TROUBLESHOOTING procedure. (See F–227 INTERMITTENT CONCERN TROUBLESHOOTING.)

STEP	INSPECTION		ACTION
2	**VERIFY RELATED PENDING CODE OR STORED DTCS** • Turn ignition key to OFF, then ON (Engine OFF). • Verify related pending code or stored DTCs. • Is other DTCs present?	Yes	Go to appropriate DTC troubleshooting procedures.
		No	If drive ability concern is present, go to Step 8. If not, go to next step.
3	**IDENTIFY TRIGGER DTC FOR FREEZE FRAME DATA** • Is DTC P0172 on FREEZE FRAME DATA?	Yes	Go to next step.
		No	Go to troubleshooting procedures for DTC on FREEZE FRAME DATA.
4	**VERIFY CURRENT INPUT SIGNAL STATUS (IGNITION KEY TO ON/IDLE)** • Access ECT, MAF, TP and VSS PIDs using WDS or equivalent. • Is there any signal that is far out of specification when ignition key is ON and engine runs?	Yes	Inspect suspected sensor and excessive resistance in related wiring harnesses. Repair or replace if necessary. Then go to Step 10.
		No	Go to next step.
5	**VERIFY CURRENT INPUT SIGNAL STATUS UNDER TROUBLE CONDITION** • Inspect PID data while simulating FREEZE FRAME DATA condition. • Is there any input signal which causes drastic changes?	Yes	Inspect suspected sensor and related wiring harnesses, and repair or replace it. Then go to Step 10.
		No	Go to next step.
6	**VERIFY CURRENT INPUT SIGNAL STATUS OF FRONT HO2S** • Access O2S11 PID using WDS or equivalent. • Verify PID while racing engine (in PARK (ATX) or NEUTRAL (MTX)). • Is PID reading okay? — **Above 0.55 V** when accelerator pedal is suddenly depress (rich condition). — **Below 0.55 V** just after release of accelerator pedal (lean condition)	Yes	Go to next step.
		No	Replace suspected front HO2S. Then go to Step 10.
7	**INSPECT FUEL LINE PRESSURE** • Turn ignition key to OFF. • Inspect fuel line pressure while engine running. (See F–20 FUEL LINE PRESSURE INSPECTION.) • Is fuel line pressure okay?	Yes	Go to next step.
		No	Replace fuel pump unit, then go to Step 10.
8	**INSPECT PURGE SOLENOID VALVE FOR STUCK OPEN** • Turn ignition key to OFF. • Disconnect both hoses from purge solenoid valve. • Blow air through purge solenoid valve. • Does air blow through?	Yes	Replace purge solenoid valve. Then go to Step 10.
		No	Go to next step.
9	**INSPECT PCV VALVE OPERATION** • Inspect PCV valve operation. (See F–41 PCV VALVE INSPECTION.) • Is PCV valve okay?	Yes	Go to next step.
		No	Replace PCV valve, then go to next step.
10	**VERIFY TROUBLESHOOTING OF DTC P0172 COMPLETED** • Make sure to reconnect all disconnected connectors. • Turn ignition key to ON (Engine OFF). • Clear DTC from memory using WDS or equivalent. • Perform KOER self-test. (See F–66 KOEO/KOER SELF-TEST.) • Is same DTC present?	Yes	Replace PCM, then go to next step. (See F–43 PCM REMOVAL/INSTALLATION.)
		No	Go to next step.
11	**VERIFY AFTER REPAIR PROCEDURE** • Perform “After Repair Procedure”. (See F–66 AFTER REPAIR PROCEDURE.) • Is there any DTC present?	Yes	Go to applicable DTC troubleshooting. (See F–67 DTC TABLE.)
		No	Troubleshooting completed.

DTC P0300

A6E397001085W01

DTC P0300	Random misfire detection
DETECTION CONDITION	• PCM monitors CKP sensor input signal interval time. PCM calculates change of interval time for each cylinder. If change of interval time exceeds preprogrammed criteria, PCM detects misfire in the corresponding cylinder. While the engine is running, the PCM counts number of misfires that occurred at **200 crankshaft revolutions** and **1,000 crankshaft revolutions** and calculates misfire ratio for each crankshaft revolution. If the ratio exceeds the preprogrammed criteria, PCM determines that a misfire, which can damage catalytic converter or affect emission performance, has occurred. **Diagnostic support note** • This is a continuous monitor (MISFIRE). • MIL illuminates if PCM detects the misfire which affects emission performance in two consecutive drive cycles or in one drive cycle while the DTC for the same malfunction has been stored in the PCM. • MIL flashes if PCM detects the misfire which can damage the catalytic converter during first drive cycle. Therefore, PENDING CODE is not available while MIL flashes. • PENDING CODE is available if PCM detects the misfire which affects emission performance during first drive cycle. • FREEZE FRAME DATA is available. • DTC is stored in the PCM memory.
POSSIBLE CAUSE	• CKP sensor malfunction • CMP sensor malfunction • Ignition coil malfunction • High-tension lead malfunction • MAF sensor contamination • Excess air suction in intake air system (between MAF sensor and intake manifold) • Fuel pump malfunction • Fuel pressure regulator malfunction • Fuel line clogged • Fuel filter clogged • Fuel leakage in fuel line • Fuel runout • Poor quality fuel • Purge control solenoid valve malfunction • PCV valve malfunction • EGR valve malfunction • Vacuum hoses damages or improper connection • Related connector and terminal malfunction • Related wiring harness malfunction • Insufficient compression • Variable valve timing control system improper (L3-VE)

Diagnostic procedure

STEP	INSPECTION		ACTION
1	**VERIFY FREEZE FRAME DATA HAS BEEN RECORDED** • Has FREEZE FRAME DATA been recorded?	Yes	Go to next step.
		No	Record FREEZE FRAME DATA on repair order, then go to next step.
2	**VERIFY RELATED SERVICE INFORMATION AVAILABILITY** • Check for related Service Information availability. • Is any related Service Information available?	Yes	Perform repair or diagnosis according to available Service Information. • If vehicle is not repaired, go to next step.
		No	Go to next step.
3	**VERIFY RELATED PENDING CODE OR STORED DTCs** • Turn ignition key to OFF then ON (Engine OFF). • Verify related pending code or stored DTCs. • Are other DTCs present?	Yes	Go to appropriate DTC troubleshooting. (See F–67 DTC TABLE.)
		No	Go to next step.
4	**VERIFY CURRENT INPUT SIGNAL STATUS (IGNITION KEY TO ON/IDLE)** • Access BOO, ECT, IAT, MAF, RPM, TP, and VSS PIDs using WDS or equivalent. (See F–45 PCM INSPECTION.) • Is there any signal that is far out of specification when ignition switch is ON and engine runs at idle?	Yes	Inspect suspected circuit and/or part according to inspection results. (See F–45 PCM INSPECTION.) Then go to Step 22.
		No	Go to next step.

STEP	INSPECTION		ACTION
5	**VERIFY CURRENT INPUT SIGNAL STATUS UNDER TROUBLE CONDITION** • Inspect same PIDs as in Step 4 while simulating FREEZE FRAME DATA condition. • Is there any signal which causes drastic changes?	Yes	Inspect suspected circuit and/or part according to inspection results. (See F–45 PCM INSPECTION.) Then go to Step 22.
		No	Go to next step.
6	**INSPECT CMP SENSOR** • Inspect CMP sensor. (See F–55 CAMSHAFT POSITION (CMP) SENSOR INSPECTION.) • Is CMP sensor okay?	Yes	Go to next step.
		No	Inspect installation condition and damages on timing belt and gears, repair faulty parts. • If it is okay, replace CMP sensor. Then go to Step 22.
7	**VERIFY CKP SENSOR INSTALLATION CONDITION** • Inspect for CKP sensor looseness. • Is CKP sensor loosen?	Yes	Retighten CKP sensor, then go to Step 22.
		No	Go to next step.
8	**INSPECT IGNITION COIL OPERATION AND HIGH-TENSION LEAD WITH TIMING LIGHT** • Verify blinking condition on each cylinders using timing light at idle. • Do all cylinders show blinking condition?	Yes	Go to Step 12.
		No	Go to next step.
9	**INSPECT HIGH-TENSION LEADS OF NO BLINKING CYLINDER** • Turn ignition key to OFF. • Inspect high-tension leads for improper installation, corrosion on terminal, open lead and damaged cover. • Is condition of high-tension lead okay?	Yes	Go to next step.
		No	Replace faulty high-tension lead, then go to Step 22.
10	**INSPECT POWER SUPPLY TERMINAL AT IGNITION COIL CONNECTOR** • Disconnect ignition coil connector. • Turn ignition key to ON (Engine OFF). • Measure voltage between ignition coil terminal B (harness-side) and body ground. • Is there voltage reading **B+**?	Yes	Go to next step.
		No	Inspect for open circuit between ignition coil connector and ignition switch. Repair or replace wiring harness, then go to Step 22.
11	**INSPECT IGNITION COIL RESISTANCE** • Inspect ignition coil resistance. (See G–9 IGNITION COIL INSPECTION.) • Is coil resistance okay?	Yes	Go to step 22.
		No	Replace ignition coil, then go to Step 22.
12	**INSPECT MAF PID** • Start engine. • Access MAF PID using WDS or equivalent. • Verify that MAF PID changes quickly according to race engine RPM. • Is MAF PID response okay?	Yes	Go to next step.
		No	Replace MAF sensor, then go to Step 22.
13	**INSPECT EXCESSIVE AIR SUCTION IN INTAKE AIR SYSTEM** • Inspect for air leakage at following: — Between MAF sensor and throttle body — Between throttle body and intake manifold • Is there any malfunction?	Yes	Repair or replace suspected part, then go to Step 22.
		No	Go to next step.
14	**INSPECT FUEL LINE PRESSURE** • Inspect fuel line pressure. (See F–20 FUEL LINE PRESSURE INSPECTION.) • Is fuel line pressure okay?	Yes	Go to step 16.
		No	If fuel line pressure is too low, go to next step. If fuel line pressure is excess high, replace fuel pump unit, then go to Step 22.

STEP	INSPECTION		ACTION
15	**INSPECT FUEL LINE FROM FUEL PUMP TO FUEL DELIVERY PIPE** • Visually inspect for fuel leakage in fuel line for any leakage. • Is any fuel leakage found?	Yes	Replace suspected fuel line, then go to Step 22.
		No	Inspect fuel filters for following: • Restriction or clogging at fuel filter (high-pressure side). • Foreign materials or stain inside fuel filter (low-pressure side) Perform following actions depend on the result above. • If restriction or clogging is found at fuel filter (high-pressure side), replace fuel pump unit. • If foreign materials or stain is found inside fuel filter (low-pressure side), clean of fuel tank and filter (low-pressure side). • If all items above are okay, replace fuel pump unit. Then, go to Step 22.
16	**INSPECT ENGINE COMPRESSION** • Inspect engine compression. (See B–9 COMPRESSION INSPECTION.) • Is it okay?	Yes	Go to next step.
		No	Implement engine overhaul for repairs, then go to Step 22.
17	**INSPECT VARIABLE VALVE TIMING CONTROL SYSTEM OPERATION** **Note** • The following test should be performed for variable valve timing control system. Go to next step for vehicles without variable valve timing control system. • Inspect variable valve timing control system operation. • Does variable valve timing control system?	Yes	Go to next step.
		No	Repair or replace malfunctioning part according to variable valve timing control system inspection results, then go to Step 22.
18	**INSPECT OPERATION OF PURGE CONTROL SOLENOID VALVE** • Turn ignition key to OFF. • Connect vacuum pump to purge control solenoid valve and apply vacuum to solenoid. • Verify that solenoid holds vacuum. • Turn ignition key to ON (Engine OFF). • Access EVAPCP PID in SIMULATION TEST using WDS or equivalent. • Set duty value to **100%** for EVAPCP PID. • Apply vacuum while turning solenoid from OFF to ON and simulating EVAPCP PID with **100%** duty value. • Verify that solenoid releases vacuum while solenoid is turned ON. • Is purge control solenoid valve operation okay?	Yes	Go to next step.
		No	Replace purge control solenoid valve, then go to Step 22.
19	**INSPECT PCV VALVE OPERATION** • Turn ignition key to OFF. • Remove PCV valve and inspect valve operation. (See F–41 PCV VALVE INSPECTION.) • Is PCV valve operation okay?	Yes	Replace PCV valve, then go to Step 22.
		No	Go to next step.
20	**INSPECT OPERATION OF EGR VALVE** • Remove EGR valve. • Visually inspect for stuck to open. • Does EGR valve stuck to open?	Yes	Repair or replace EGR valve, then go to Step 22.
		No	Go to next step.

F

STEP	INSPECTION		ACTION
21	**INSPECT SEALING OF ENGINE COOLANT PASSAGE** **Warning** • **Removing radiator cap when radiator is hot is dangerous. Scalding coolant and steam may shoot out and cause serious injury.** • **When removing radiator cap, wrap thick cloth around and turn it slowly.** • Remove radiator cap. • Implement procedure to bleed air from engine coolant, then run engine at idle. • Is there any small bubble which makes engine coolant white at filling opening? **Note** • Large bubbles are normal since they are remaining air coming out from engine coolant passage.	Yes	Air gets in from poor sealing on head gasket or other areas between combustion chamber and engine coolant passage. Repair or replace faulty parts, then go to next step.
		No	Go to next step.
22	**VERIFY TROUBLESHOOTING OF MISFIRE DTC COMPLETED** • Make sure to reconnect all disconnected connectors. • Turn ignition key to ON (Engine OFF). • Clear DTC from memory using WDS or equivalent. • Run PCM adaptive memory procedure drive mode. (See F–64 OBD DRIVE MODE.) • Is PENDING CODE the same as DTC present?	Yes	Replace PCM, then go to next step. (See F–43 PCM REMOVAL/INSTALLATION.)
		No	Go to next step.
23	**VERIFY AFTER REPAIR PROCEDURE** • Perform “After Repair Procedure”. (See F–66 AFTER REPAIR PROCEDURE.) • Is there any DTC present?	Yes	Go to applicable DTC troubleshooting. (See F–67 DTC TABLE.)
		No	Troubleshooting completed.

DTC P0301, P0302, P0303, P0304

A6E397001085W02

DTC P0301 **DTC P0302** **DTC P0303** **DTC P0304**	**Cylinder No.1 misfire detection** **Cylinder No.2 misfire detection** **Cylinder No.3 misfire detection** **Cylinder No.4 misfire detection**
DETECTION CONDITION	• PCM monitors CKP sensor input signal interval time. PCM calculates the change of interval time for each cylinder. If the change of interval time exceeds the preprogrammed criteria, PCM detects a misfire in the corresponding cylinder. While the engine is running, PCM counts number of misfires that occurred at **200 crankshaft revolutions** and **1,000 crankshaft revolutions** and calculates misfire ratio for each crankshaft revolution. If the ratio exceeds the preprogrammed criteria, PCM determines that a misfire, which can damage catalytic converter or affect emission performance, has occurred. **Diagnostic support note** • This is a continuous monitor (MISFIRE). • MIL illuminates if PCM detects the misfire which affects emission performance in two consecutive drive cycles or in one drive cycle while the DTC for the same malfunction has been stored in the PCM. • MIL flashes if PCM detects the misfire which can damage the catalytic converter during first drive cycle. Therefore, PENDING CODE is not available while MIL flashes. • PENDING CODE is available if PCM detects the misfire which affects emission performance during first drive cycle. • FREEZE FRAME DATA is available. • DTC is stored in the PCM memory.
POSSIBLE CAUSE	• Spark plug malfunction • High-tension lead malfunction • Fuel injector malfunction • Air suction in intake air system (between dynamic chamber and cylinder head) • Inadequate engine compression due to engine internal malfunction • Related connector or terminal malfunction • Related wiring harness malfunction

Diagnostic procedure

STEP	INSPECTION		ACTION
1	**VERIFY FREEZE FRAME DATA HAS BEEN RECORDED** • Has FREEZE FRAME DATA been recorded?	Yes	Go to next step.
		No	Record FREEZE FRAME DATA on repair order, then go to next step.
2	**VERIFY RELATED SERVICE INFORMATION AVAILABILITY** • Check for related Service Information availability. • Is any related Service Information available?	Yes	Perform repair or diagnosis according to available Service Information. • If vehicle is not repaired, go to next step.
		No	Go to next step.
3	**VERIFY RELATED PENDING CODE OR STORED DTCS** • Turn ignition key to OFF then ON (Engine OFF). • Verify related pending code or stored DTCs. • Is other DTCs present?	Yes	Go to appropriate DTC troubleshooting. (See F–67 DTC TABLE.)
		No	Go to next step.
4	**VERIFY CURRENT INPUT SIGNAL STATUS (IGNITION KEY TO ON /IDLE)** • Access BOO, ECT, IAT, MAF, RPM, TP and VSS PIDs using WDS or equivalent. (See F–45 PCM INSPECTION.) • Is there any signal that is far out of specification when ignition switch is ON and engine runs at idle?	Yes	Inspect suspected circuit and/or part according to inspection results. Then go to Step 12. (See F–45 PCM INSPECTION.)
		No	Go to next step.
5	**VERIFY CURRENT INPUT SIGNAL STATUS UNDER TROUBLE CONDITION** • Inspect same PIDs as in Step 4 while simulating FREEZE FRAME DATA condition. • Is there any signal which causes drastic changes?	Yes	Inspect suspected circuit and/or part according to inspection results. Then go to Step 12. (See F–45 PCM INSPECTION.)
		No	Go to next step.
6	**INSPECT SPARK PLUG CONDITION** • Turn ignition key to OFF. • Remove spark plug from suspected cylinder. • Inspect spark plug condition: — Cracks — Excess wear — Gap — Wet • Is any problem found on spark plug?	Yes	• If spark plug is wet, fuel flooding is suspected. Go to step 12. • If spark plug has a cracks, excessive wear or improper gap, replace faulty spark plug. Then go to Step 12.
		No	Go to next step.
7	**VERIFY HIGH-TENSION LEAD CONDITION** • Remove high-tension lead. • Inspect high-tension lead condition and resistance. — Cracks — Spark shorts to cylinder head through high-tension lead insulator • Is high-tension lead okay?	Yes	Go to next step.
		No	Replace high-tension lead, then go to Step 12.
8	**INSPECT FOR AIR SUCTION AT INTAKE-AIR SYSTEM** • Inspect for air leakage at following: — Around connection of dynamic chamber and intake manifold — Around connection of intake manifold and cylinder head • Is air leakage found?	Yes	Repair or replace suspected part, then go to Step 12.
		No	Go to next step.
9	**INSPECT FUEL INJECTOR HARNESS** • Remove intake air system parts. • Disconnect fuel injector connector on suspected cylinder. • Connect NOID LIGHT to fuel injector connector terminals. • Inspect dim of light during cranking. • Does noid light illuminate?	Yes	Go to next step.
		No	Inspect for fuel injector harnesses. Repair or replace it if necessary, then go to Step 12.

F

STEP	INSPECTION		ACTION
10	**INSPECT SEALING OF ENGINE COOLANT PASSAGE** **Warning** • **Removing radiator cap when radiator is hot is dangerous, Scalding coolant and steam may shoot out and cause serious injury.** • **When removing radiator cap, wrap thick cloth around and turn it slowly.** • Remove radiator cap. • Implement procedure to bleed air from engine coolant, then run engine at idle. • Is there any small bubble which makes engine coolant white at filling opening? **Note** • Large bubbles are normal since they are remaining air coming out from engine coolant passage.	Yes	Air gets in from poor sealing on head gasket or other areas between combustion chamber and engine coolant passage. Repair or replace faulty parts, then go to Step 12.
		No	Go to next step.
11	**INSPECT ENGINE COMPRESSION** • Inspect engine compression. (See B–9 COMPRESSION INSPECTION.) • Is engine compression okay?	Yes	Go to next step.
		No	Overhaul the engine, then go to next step.
12	**INSPECT FUEL INJECTOR OPERATION** • Remove fuel injector from suspected cylinder. • Swap injector with injector on other cylinder. • Start engine and run it at idle. • Is misfire DTC for cylinder which has a suspected fuel injector?	Yes	Replace injector, then go to step 13.
		No	Go to next step.
13	**VERIFY TROUBLESHOOTING OF MISFIRE DTC COMPLETED** • Make sure to reconnect all disconnected connectors. • Start engine. • Clear DTC from PCM memory using WDS or equivalent. • Run PCM adaptive memory procedure drive mode. (See F–64 OBD DRIVE MODE.) • Is same PENDING CODE or stored code the same as DTC present?	Yes	Replace PCM, then go to next step. (See F–43 PCM REMOVAL/INSTALLATION.)
		No	Go to next step.
14	**VERIFY AFTER REPAIR PROCEDURE** • Perform “After Repair Procedure”. (See F–66 AFTER REPAIR PROCEDURE.) • Is there any DTC present?	Yes	Go to applicable DTC troubleshooting. (See F–67 DTC TABLE.)
		No	Troubleshooting completed.

DTC P0327

A6E397001085W03

DTC P0327	Knock sensor circuit low input
DETECTION CONDITION	• PCM monitors input signal from knock sensor when engine is running. If input voltage at PCM terminals between 2P and 2S is **below 0.9 V**, PCM determines that knock sensor circuit has malfunction. **Diagnostic support note** • This is a continuous monitor (CCM). • MIL illuminates if PCM detects the above malfunction condition during first drive cycle. • PENDING CODE is available if PCM detects the above malfunction condition. • FREEZE FRAME DATA is available. • DTC is stored in the PCM memory.
POSSIBLE CAUSE	• Knock sensor malfunction • Connector or terminal malfunction • Open or short to ground circuit between knock sensor connector terminal A and PCM terminal 2S • Open or short to ground circuit between knock sensor connector terminal B and PCM terminal 2P • Short knock sensor two wires

DTC P0327	Knock sensor circuit low input

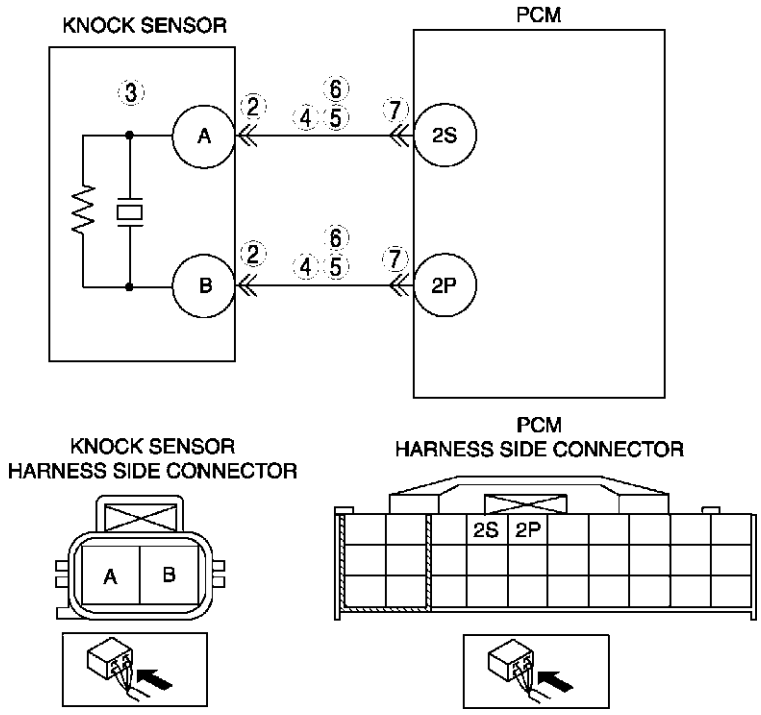

Diagnostic procedure

STEP	INSPECTION		ACTION
1	**PERFORM DTC CONFIRMATION PROCEDURE** • Perform DTC CONFIRMATION PROCEDURE. (See F–66 DTC CONFIRMATION PROCEDURE.) • Is same DTC present?	Yes	Go to next step.
		No	Intermittent concern exists. Go to INTERMITTENT CONCERN TROUBLESHOOTING procedure. (See F–227 INTERMITTENT CONCERN TROUBLESHOOTING.)
2	**INSPECT KNOCK SENSOR CONNECTOR TERMINAL** • Turn ignition key to OFF. • Disconnect knock sensor connector. • Check for poor connection at terminals A and B (damaged, pulled-out pins, corrosion, etc.). • Is there any malfunction?	Yes	Repair terminal, then go to Step 8.
		No	Go to next step.
3	**INSPECT KNOCK SENSOR** • Perform knock sensor inspection. (See F–56 KNOCK SENSOR INSPECTION) • Is knock sensor okay?	Yes	Go to next step.
		No	Replace knock sensor, then go to next step.
4	**INSPECT KNOCK SENSOR CIRCUITS FOR OPEN CIRCUIT** • Disconnect knock sensor connector. • Inspect continuity between the following circuits: — Knock sensor female terminal A (harness-side) and PCM terminal 2S (harness-side) — Knock sensor female terminal B (harness-side) and PCM terminal 2P (harness-side) • Are there continuities?	Yes	Go to next step.
		No	Repair or replace suspected wiring harness, then go to Step 8.
5	**INSPECT KNOCK SENSOR CIRCUITS FOR SHORT TO GROUND** • Inspect continuity between following circuits: — Knock sensor female terminal A (harness-side) and body ground — Knock sensor female terminal B (harness-side) and body ground • Are there continuities?	Yes	Repair or replace suspected wiring harness, then go to Step 8.
		No	Go to next step.

STEP	INSPECTION		ACTION
6	**INSPECT FOR SHORT CIRCUITS** • Inspect continuity between knock sensor female terminals A and B (harness-side). • Is there continuity?	Yes	Repair or replace suspected harness, then go to Step 8.
		No	Go to next step.
7	**INSPECT PCM CONNECTOR TERMINAL** • Turn ignition key to OFF. • Disconnect PCM connector. • Inspect for poor connection at terminals 2P and 2S (damaged, pulled-out pins, corrosion, etc.). • Is there any malfunction?	Yes	Repair terminal, then go to Step 8.
		No	Go to next step.
8	**VERIFY TROUBLESHOOTING OF DTC P0327 COMPLETED** • Make sure to reconnect all disconnected connectors. • Clear DTC from memory using WDS or equivalent. • Perform KOEO/KOER self-test. (See F–66 KOEO/KOER SELF-TEST.) • Is same DTC present?	Yes	Replace PCM, then go to next step. (See F–43 PCM REMOVAL/INSTALLATION.)
		No	Go to next step.
9	**VERIFY AFTER REPAIR PROCEDURE** • Perform “After Repair Procedure”. (See F–66 AFTER REPAIR PROCEDURE.) • Is there any DTC present?	Yes	Go to applicable DTC troubleshooting. (See F–67 DTC TABLE.)
		No	Troubleshooting completed.

DTC P0328

A6E397001085W04

DTC P0328	Knock sensor circuit high input
DETECTION CONDITION	• PCM monitors input signal from knock sensor when engine is running. If input voltage at PCM terminals between 2P and 2S is **above 4.9 V**, PCM determines that knock sensor circuit has a malfunction. **Diagnostic support note** • This is a continuous monitor (CCM). • MIL illuminates if PCM detects the above malfunction conditions during first drive cycle. • PENDING CODE is available if PCM detects the above malfunction condition. • FREEZE FRAME DATA is available. • DTC is stored in PCM memory.
POSSIBLE CAUSE	• Knock sensor malfunction • Connector or terminal malfunction • Short to power circuit in wiring between knock sensor terminal A and PCM terminal 2S • Short to power circuit in wiring between knock sensor terminal B and PCM terminal 2P

DTC P0328	Knock sensor circuit high input

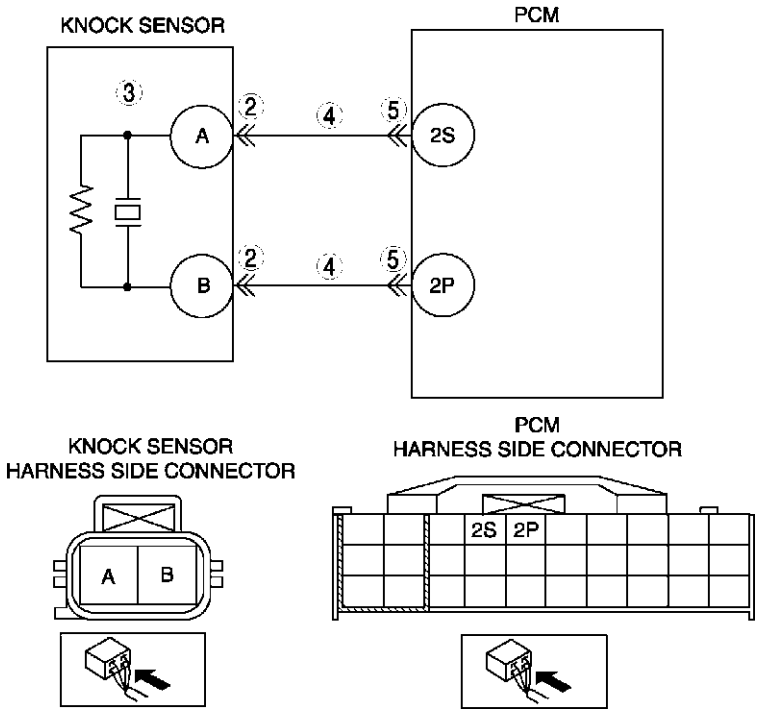

Diagnostic procedure

STEP	INSPECTION		ACTION
1	**PERFORM DTC CONFIRMATION PROCEDURE** • Perform DTC CONFIRMATION PROCEDURE. (See F–66 DTC CONFIRMATION PROCEDURE.) • Is same DTC present?	Yes	Go to next step.
		No	Intermittent concern exists. Go to INTERMITTENT CONCERN TROUBLESHOOTING procedure. (See F–227 INTERMITTENT CONCERN TROUBLESHOOTING.)
2	**INSPECT KNOCK SENSOR CONNECTOR TERMINAL** • Turn ignition key to OFF. • Disconnect knock sensor connector. • Inspect for poor connection at terminals A and B (damaged, pulled-out pins, corrosion, etc.). • Is there any malfunction?	Yes	Repair terminal, then go to step 6.
		No	Go to next step.
3	**INSPECT KNOCK SENSOR** • Perform knock sensor inspection. (See F–56 KNOCK SENSOR INSPECTION) • Is knock sensor okay?	Yes	Go to next step.
		No	Replace knock sensor, then go to step 6.
4	**INSPECT KNOCK SIGNAL CIRCUIT FOR SHORT TO POWER** • Turn ignition key ON (Engine OFF). • Measure voltage between knock sensor terminal A (harness-side) and body GND and knock sensor terminal B (harness-side) and body GND.? • Is any voltage reading?	Yes	Repair or replace harness for short to power, then go to step 6.
		No	Go to next step.
5	**INSPECT PCM CONNECTOR** • Disconnect PCM connector. • Inspect for poor connection (damaged, pulled-out terminals, corrosion, etc.). • Is there any malfunction?	Yes	Repair or replace terminal, then go to step 6.
		No	Go to next step.

STEP	INSPECTION		ACTION
6	**VERIFY TROUBLESHOOTING OF DTC P0328 COMPLETED** • Make sure to connect all disconnected connectors. • Clear DTC from PCM memory using WDS or equivalent. • Perform KOEO/KOER self-test. (See F–66 KOEO/KOER SELF-TEST.) • Is same DTC present?	Yes	Replace PCM, then go to next step. (See F–43 PCM REMOVAL/INSTALLATION.)
		No	Go to next step.
7	**VERIFY AFTER REPAIR PROCEDURE** • Perform “After Repair Procedure”. (See F–66 AFTER REPAIR PROCEDURE.) • Is there any DTC present?	Yes	Go to applicable DTC troubleshooting. (See F–67 DTC TABLE.)
		No	Troubleshooting completed.

DTC P0335

A6E397001085W05

DTC P0335	CKP sensor circuit malfunction
DETECTION CONDITION	• If PCM does not receive input voltage from CKP sensor for **4.2 s** while MAF is **2.0 g/s {0.26 lb/min.} or above**, PCM determines that CKP sensor circuit has malfunction. **Diagnostic support note** • This is a continuous monitor (CCM). • MIL illuminates if PCM detects the above malfunction conditions during first drive cycle. • PENDING CODE is available if PCM detects the above malfunction condition. • FREEZE FRAME DATA is available. • DTC is stored in the PCM memory.
POSSIBLE CAUSE	• CKP sensor malfunction • Connector or terminal malfunction • CKP sensor is dirty. • Short to power between CKP sensor terminal A to PCM terminal 2D • Short to power between CKP sensor terminal B to PCM terminal 2G • Short to ground between CKP sensor terminal A to PCM terminal 2D • Short to ground between CKP sensor terminal B to PCM terminal 2G • Open circuit between CKP sensor terminal A to PCM terminal 2D • Open circuit between CKP sensor terminal B to PCM terminal 2G • CKP sensor pulse wheel malfunction • Both CKP sensor wires are shorted each other

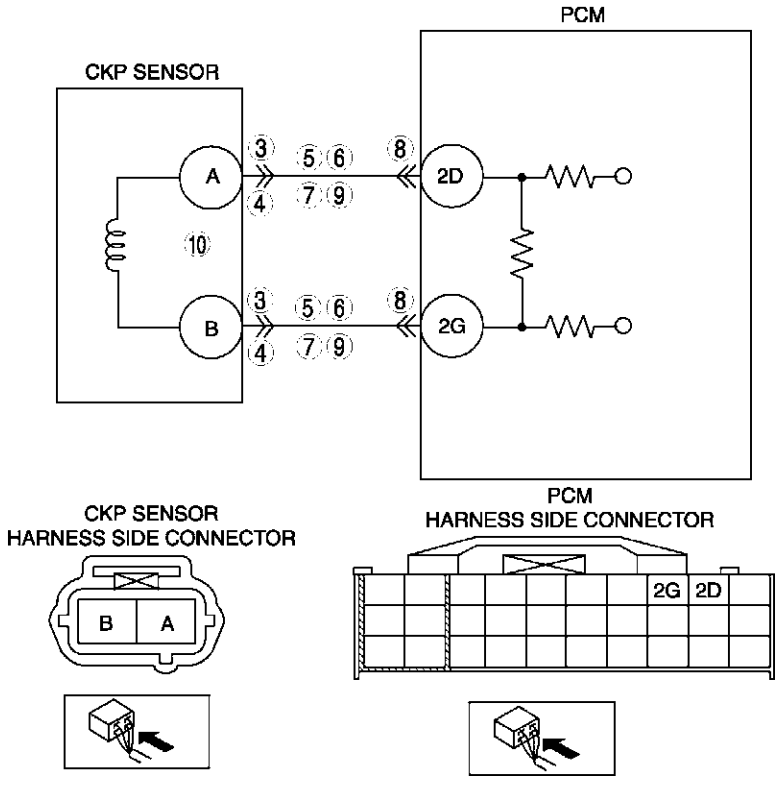

Diagnostic procedure

STEP	INSPECTION		ACTION
1	**VERIFY FREEZE FRAME DATA HAS BEEN RECORDED** • Has FREEZE FRAME DATA been recorded?	Yes	Go to next step.
		No	Record FREEZE FRAME DATA on repair order, then go to next step.
2	**VERIFY RELATED SERVICE INFORMATION AVAILABILITY** • Check for related Service Information availability. • Is any related Service Information available?	Yes	Perform repair or diagnosis according to available Service Information. • If vehicle is not repaired, go to next step.
		No	Go to next step.
3	**VERIFY CKP SENSOR VOLTAGE** • Disconnect CKP sensor connector. • Connect voltmeter between CKP sensor connector terminals A and B (sensor-side). • Inspect the voltage in AC range while cranking the engine. • Is any voltage reading?	Yes	Go to next step.
		No	Go to step 10.
4	**INSPECT POOR CONNECTION OF CKP SENSOR CONNECTOR** • Verify that the CKP sensor connector is connected securely. • Is connector okay?	Yes	Go to next step.
		No	Reconnect the connector, then go to Step 11.
5	**INSPECT CKP CIRCUIT FOR SHORT TO POWER** • Turn ignition key OFF • Disconnect CKP sensor connector. • Turn ignition key ON (Engine OFF). • Measure voltage between following terminals — CKP sensor terminal A — CKP sensor terminal B • Is any voltage reading?	Yes	Repair or replace suspected harness, then go to Step 11.
		No	Go to next step.
6	**INSPECT CKP CIRCUIT FOR SHORT TO GROUND** • Inspect continuity between following terminal and body ground: — CKP sensor connector terminal A (harness-side) — CKP sensor connector terminal B (harness-side) • Is there any continuity?	Yes	Repair or replace suspected harness, then go to Step 11.
		No	Go to next step.
7	**INSPECT CKP CIRCUITS FOR SHORTS** • Inspect continuity between CKP sensor connector terminals A and B (harness-side). • Is there any continuity?	Yes	Repair or replace suspected harness, then go to Step 11.
		No	Go to next step.
8	**INSPECT POOR CONNECTION OF PCM CONNECTOR** • Disconnect PCM connector. • Inspect for poor connection (damaged, pulled-out terminals, corrosion, etc.). • Is there any malfunction?	Yes	Repair terminal, then go to Step 11.
		No	Go to next step.
9	**INSPECT CKP CIRCUIT FOR OPEN** • Inspect continuity between following circuits: — CKP sensor terminal A (harness-side) and PCM terminal 2D (harness-side) — CKP sensor terminal B (harness-side) and PCM terminal 2G (harness-side) • Is there continuity?	Yes	Go to Step 11.
		No	Repair or replace suspected harness, then go to Step 11.
10	**INSPECT CKP SENSOR** • Turn ignition key to OFF. • Perform CKP sensor inspection. (See F–54 CRANKSHAFT POSITION (CKP) SENSOR INSPECTION) • Is CKP sensor okay?	Yes	Go to next step.
		No	Inspect CKP sensor pulse wheel for damage. Replace CKP sensor pulse wheel and go to next step.

F

STEP	INSPECTION		ACTION
11	**VERIFY TROUBLESHOOTING OF DTC P0335 COMPLETED** • Make sure to reconnect all disconnected connectors. • Turn ignition key to ON (Engine OFF). • Clear DTC from PCM memory using WDS or equivalent. • Start engine. • Access MAF PID using WDS or equivalent. **Note** • MAF PID should indicate **2.0 g/s {0.26 lb/min.} or above** during this test • Is same DTC present?	Yes	Replace PCM, then go to next step. (See F–43 PCM REMOVAL/INSTALLATION.)
		No	Go to next step.
12	**VERIFY AFTER REPAIR PROCEDURE** • Perform “After Repair Procedure”. (See F–66 AFTER REPAIR PROCEDURE.) • Is there any DTC present?	Yes	Go to applicable DTC troubleshooting. (See F–67 DTC TABLE.)
		No	Troubleshooting completed.

DTC P0340

A6E397001085W06

DTC P0340	Camshaft position (CMP) sensor circuit malfunction
DETECTION CONDITION	• PCM monitors input voltage from CMP sensor when engine is running. If PCM does not receive input voltage from CMP sensor while PCM receives input signal from CKP sensor, PCM determines that CMP circuit has malfunction. **Diagnostic support note** • This is a continuous monitor (CCM). • MIL illuminates if PCM detects the above malfunction condition during first drive cycle. • PENDING CODE is available if PCM detects the above malfunction condition. • FREEZE FRAME DATA is available. • DTC is stored in the PCM memory.
POSSIBLE CAUSE	• CMP sensor malfunction • Connector or terminal malfunction • CMP sensor is dirty • Short to power circuit between CMP sensor terminal A and PCM terminal 2M • Short to power circuit between CMP sensor terminal B and PCM terminal 2J • Short to ground circuit between CMP sensor terminal A and PCM terminal 2M • Short to ground circuit between CMP sensor terminal B and PCM terminal 2J • Open circuit between CMP sensor terminal A and PCM terminal 2M • Open circuit between CMP sensor terminal B and PCM terminal 2J • CKP sensor pulse wheel malfunction • Both CMP sensor wires are shorted each other

DTC P0340	Camshaft position (CMP) sensor circuit malfunction

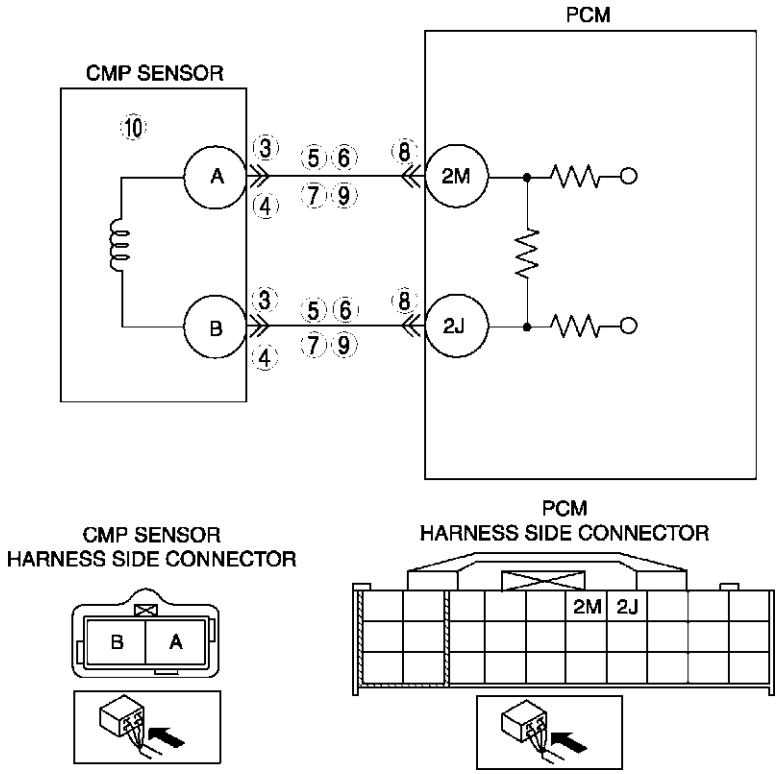

Diagnostic procedure

STEP	INSPECTION		ACTION
1	**VERIFY FREEZE FRAME DATA HAS BEEN RECORDED** • Has FREEZE FRAME DATA been recorded?	Yes	Go to next step.
		No	Record FREEZE FRAME DATA on repair order, then go to next step.
2	**VERIFY RELATED SERVICE INFORMATION AVAILABILITY** • Check for related Service Information availability. • Is any related Service Information available?	Yes	Perform repair or diagnosis according to available Service Information. • If vehicle is not repaired, go to next step.
		No	Go to next step.
3	**VERIFY CMP SENSOR VOLTAGE** • Disconnect CMP sensor connector. • Connect voltmeter between CMP sensor connector terminals A and B (sensor-side). • Inspect the voltage in AC range while cranking the engine. • Is any voltage reading?	Yes	Go to next step.
		No	Go to step 10.
4	**INSPECT POOR CONNECTION OF CMP SENSOR CONNECTOR** • Verify that the CMP sensor connector is connected securely. • Is connector okay?	Yes	Go to next step.
		No	Reconnect the connector, then go to Step 11.
5	**INSPECT CMP CIRCUIT FOR SHORT TO POWER** • Turn ignition key OFF. • Disconnect CMP sensor connector. • Turn ignition key ON (Engine OFF) • Measure voltage at CMP sensor terminals A and B. • Is any voltage reading?	Yes	Repair or replace suspected harness, then go to Step 11.
		No	Go to next step.

STEP	INSPECTION		ACTION
6	**INSPECT CMP CIRCUIT FOR SHORT TO GROUND** • Inspect continuity between following terminal and body ground: — CMP sensor connector terminal A (harness-side) — CMP sensor connector terminal B (harness-side) • Is there any continuity?	Yes	Repair or replace suspected harness, then go to Step 11.
		No	Go to next step.
7	**INSPECT CMP CIRCUITS FOR SHORTS** • Inspect continuity between CMP sensor connector terminals A and B (harness-side). • Is there any continuity?	Yes	Repair or replace suspected harness, then go to Step 11.
		No	Go to next step.
8	**INSPECT POOR CONNECTION OF PCM CONNECTOR** • Disconnect PCM connector. • Inspect for poor connection (damaged, pulled-out terminals, corrosion, etc.). • Is there any malfunction?	Yes	Repair terminal, then go to Step 11.
		No	Go to next step.
9	**INSPECT CMP CIRCUIT FOR OPEN CIRCUIT** • Inspect continuity between following circuits: — CMP sensor terminal A (harness-side) and PCM terminal 2M (harness-side) — CMP sensor terminal B (harness-side) and PCM terminal 2J (harness-side) • Is there continuity?	Yes	Go to Step 11.
		No	Repair or replace suspected harness, then go to Step 11.
10	**INSPECT CMP SENSOR** • Turn ignition key to OFF. • Perform CMP sensor inspection. (See F–55 CAMSHAFT POSITION (CMP) SENSOR INSPECTION.) • Is CMP sensor okay?	Yes	Go to next step.
		No	Inspect CMP sensor pulse wheel for damage. Replace CMP sensor pulse wheel and go to step 10.
11	**VERIFY TROUBLESHOOTING OF DTC P0335 COMPLETED** • Make sure to reconnect all disconnected connectors. • Turn ignition key to ON (Engine OFF). • Clear DTC from PCM memory using WDS or equivalent. • Start engine. • Access MAF PID using WDS or equivalent. **Note** • MAF PID should indicate **1.95 g/s {0.25 lb/min.} or above** during this test • Is same DTC present?	Yes	Replace PCM, then go to next step. (See F–43 PCM REMOVAL/INSTALLATION.)
		No	Go to next step.
12	**VERIFY AFTER REPAIR PROCEDURE** • Perform “After Repair Procedure”. (See F–66 AFTER REPAIR PROCEDURE.) • Is there any DTC present?	Yes	Go to applicable DTC troubleshooting. (See F–67 DTC TABLE.)
		No	Troubleshooting completed.

DTC P0403

A6E397001086W01

DTC P0403	EGR valve (stepper motor) circuit malfunction
DETECTION CONDITION	• PCM monitors input voltage from EGR valve. If voltage at PCM terminals 4E, 4H, 4K and/or 4N remain low or high, PCM determines that EGR valve circuit has malfunction. **Diagnostic support note** • This is a continuous monitor (CCM). • MIL illuminates if PCM detects the above malfunction conditions in two consecutive drive cycles or in one drive cycle while the DTC for the same malfunction has been stored in the PCM. • PENDING CODE is available if PCM detects the above malfunction condition during first drive cycle. • FREEZE FRAME DATA is available. • DTC is stored in the PCM memory.

DTC P0403	EGR valve (stepper motor) circuit malfunction
POSSIBLE CAUSE	• EGR valve malfunction • Connector or terminal malfunction • Short to power circuit in wiring between EGR valve terminal E and PCM terminal 4E • Short to power circuit in wiring between EGR valve terminal A and PCM terminal 4H • Short to power circuit in wiring between EGR valve terminal B and PCM terminal 4K • Short to power circuit in wiring between EGR valve terminal F and PCM terminal 4N • Short to ground circuit in wiring between EGR valve terminal E and PCM terminal 4E • Short to ground circuit in wiring between EGR valve terminal A and PCM terminal 4H • Short to ground circuit in wiring between EGR valve terminal B and PCM terminal 4K • Short to ground circuit in wiring between EGR valve terminal F and PCM terminal 4N • Open circuit in wiring between EGR valve terminal E and PCM terminal 4E • Open circuit in wiring between EGR valve terminal A and PCM terminal 4H • Open circuit in wiring between EGR valve terminal B and PCM terminal 4K • Open circuit in wiring between EGR valve terminal F and PCM terminal 4N • Open circuit in wiring between main relay terminal D and EGR valve terminal C • Open circuit in wiring between main relay terminal D and EGR valve terminal D • PCM malfunction

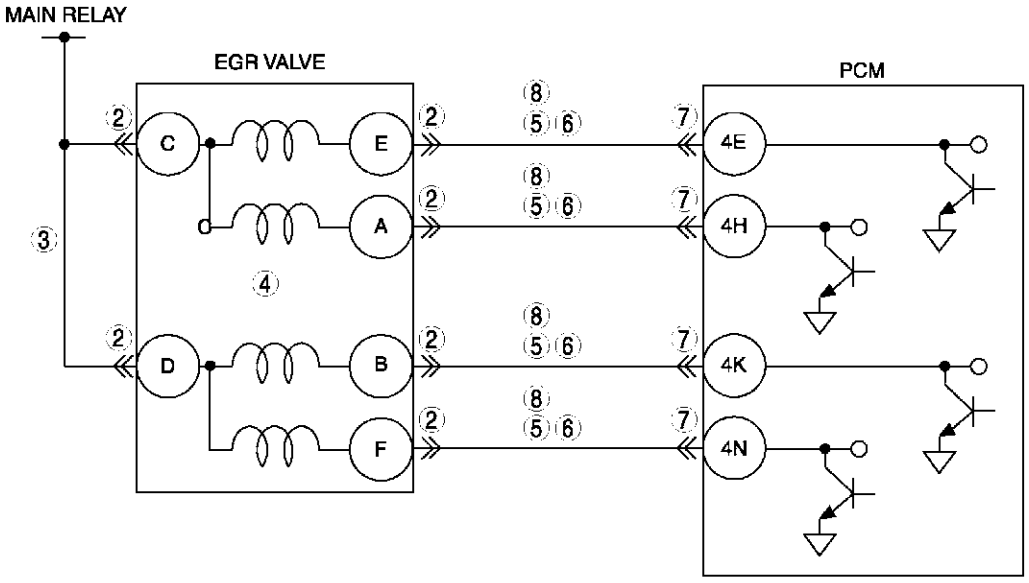

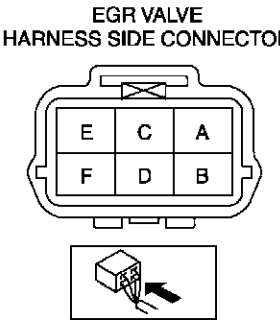

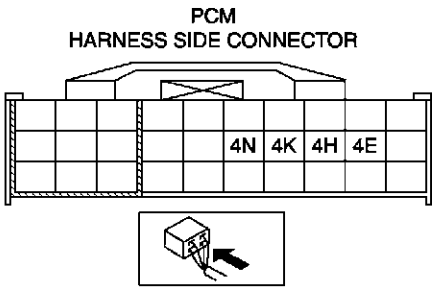

Diagnostic procedure

STEP	INSPECTION		ACTION
1	**PERFORM DTC CONFIRMATION PROCEDURE** • Perform DTC CONFIRMATION PROCEDURE. (See F–66 DTC CONFIRMATION PROCEDURE.) • Is same DTC present?	Yes	Go to next step.
		No	Intermittent concern exists. Go to INTERMITTENT CONCERN TROUBLESHOOTING procedure. (See F–227 INTERMITTENT CONCERN TROUBLESHOOTING.)
2	**INSPECT POOR CONNECTION OF EGR VALVE** • Turn ignition key to OFF. • Disconnect EGR valve connector. • Inspect for poor connection (damaged, pulled-out terminals, corrosion, etc.). • Is there any malfunctions?	Yes	Repair or replace terminals and/or connector, then go to Step 9.
		No	Go to next step.

STEP	INSPECTION		ACTION
3	**INSPECT POWER CIRCUIT FOR OPEN CIRCUIT** • Turn ignition key to ON (Engine OFF). • Measure voltage following terminal and body ground. — EGR valve terminal C — EGR valve terminal D • Is voltage **B+**?	Yes	Go to next step.
		No	Repair or replace harness for open circuit then go to Step 9.
4	**INSPECT EGR VALVE** • Perform EGR valve inspection. (See F–40 EGR VALVE INSPECTION.) • Is EGR valve okay?	Yes	Go to next step.
		No	Replace EGR valve, then go to Step 9.
5	**INSPECT FOR CONTROL CIRCUIT FOR SHORT TO GROUND** • Turn ignition key to OFF. • Inspect continuity following terminal and body ground: — EGR valve terminal E — EGR valve terminal A — EGR valve terminal B — EGR valve terminal F • is there continuity?	Yes	Repair or replace harness for short to ground, then go to Step 9.
		No	Go to next step.
6	**INSPECT FOR CONTROL CIRCUIT FOR SHORT TO POWER** • Turn ignition switch key to ON (Engine OFF). • Measure voltage following terminal and body ground: — EGR valve terminal E — EGR valve terminal A — EGR valve terminal B — EGR valve terminal F • Is voltage **B+**?	Yes	Repair or replace harness for short to power, then go to Step 9.
		No	Go to next step.
7	**INSPECT POOR CONNECTION OF PCM** • Turn ignition key to OFF. • Disconnect PCM connector. • Inspect for poor connection (damaged, pulled-out terminals, corrosion, etc.). • Is there any malfunctions?	Yes	Repair or replace terminals and/or connector, then go to Step 9.
		No	Go to next step.
8	**INSPECT CONTROL CIRCUIT FOR OPEN CIRCUIT** • Remove PCM with PCM connector connected. • Inspect continuity following terminals: — Between EGR valve terminal E and PCM terminal 4E — Between EGR valve terminal A and PCM terminal 4H — BetweenEGR valve terminal B and PCM terminal 4K — Between EGR valve terminal F and PCM terminal 4N • Is there continuity?	Yes	Go to next step.
		No	Repair or replace harness for open circuit then go to next step.
9	**VERIFY TROUBLESHOOTING OF DTC P0403 COMPLETED** • Make sure to reconnect all disconnected connectors. • Clear DTC from PCM memory using WDS or equivalent. • Perform KOEO/KOER self-test. (See F–66 KOEO/KOER SELF-TEST.) • Is same DTC present?	Yes	Replace PCM, then go to next step. (See F–43 PCM REMOVAL/INSTALLATION.)
		No	Go to next step.
10	**VERIFY AFTER REPAIR PROCEDURE** • Perform “After Repair Procedure”. (See F–66 AFTER REPAIR PROCEDURE.) • Is there any DTC present?	Yes	Go to applicable DTC troubleshooting. (See F–67 DTC TABLE.)
		No	Troubleshooting completed.

DTC P0420

A6E397001086W02

DTC P0420	Catalyst system efficiency below threshold
DETECTION CONDITION	• PCM compares number of front HO2S and rear HO2S inversions for a predetermined time. PCM monitors number of inversions rear side performs while front side inverts for a specified number of times when the following monitoring conditions are met. PCM detects inversion ratio. If inversion ratio is below threshold, PCM determins that catalyst system has deteriorated. **MONITORING CONDITION** — Engine speed **1,410—3,000 rpm** (MTX) — Engine speed **1,281—3,000 rpm** (ATX) — Calculated load **15—50%**(*1) *1: Maximum calculated load value varies depending on engine speed. **Diagnostic support note** • This is a intermittent monitor. (CATALYST) • MIL illuminates if PCM detects the above malfunction conditions in two consecutive drive cycles or in one drive cycle while the DTC for the same malfunction has been stored in the PCM. • DIAGNOSTIC MONITORING TEST RESULTS and PENDING CODE are stored if PCM detects the above malfunction condition during first drive cycle. • FREEZE FRAME DATA is available. • DTC is stored in the PCM memory.
POSSIBLE CAUSE	• TWC deterioration or malfunction • Exhaust gas leakage • Looseness of front HO2S • Looseness of rear HO2S • Front HO2S malfunction

F

Diagnostic procedure

STEP	INSPECTION		ACTION
1	**VERIFY FREEZE FRAME DATA HAS BEEN RECORDED** • Has FREEZE FRAME DATA been recorded?	Yes	Go to next step.
		No	Record FREEZE FRAME DATA on repair order, then go to next step.
2	**VERIFY RELATED SERVICE INFORMATION AVAILABILITY** • Check for related Service Information availability. • Is any related Service Information available?	Yes	Perform repair or diagnosis according to available Service Information. • If vehicle is not repaired, go to next step.
		No	Go to next step.
3	**VERIFY RELATED PENDING CODE OR STORED DTCS** • Turn ignition key to OFF then ON (Engine OFF). • Verify related pending code or stored DTCs. • Are other DTCs present?	Yes	Go to appropriate DTC troubleshooting.
		No	Go to next step.
4	**INSPECT GAS LEAKAGE OF EXHAUST SYSTEM** • Visually inspect exhaust gas leakage in exhaust system. • Is there any gas leakage?	Yes	Repair or replace faulty exhaust parts, then go to Step 7.
		No	Go to next step.
5	**INSPECT INSTALLATION OF FRONT AND REAR OXYGEN SENSORS** • Inspect for looseness of front and rear oxygen sensors. • Is it okay?	Yes	Go to next step.
		No	Retighten sensor, then go to Step 7.
6	**INSPECT TWC** • Clear DTC using WDS or equivalent generic OBD function. • Cycle ignition key to OFF then back to ON. • Inspect TWC. (See F–41 THREE-WAY CATALYTIC CONVERTER (TWC) INSPECTION) • Is it okay?	Yes	Replace suspected oxygen sensor, then go to next step.
		No	Replace TWC, then go to next step.

STEP	INSPECTION		ACTION
7	**VERIFY TROUBLESHOOTING OF DTC P0420 OR P0431 COMPLETED** • Make sure to reconnect all disconnected connectors. • Turn ignition key to ON (Engine OFF). • Clear DTC from memory using WDS or equivalent. • Run PCM adaptive memory procedure drive mode and HO2S heater, HO2S, and EGR system repair verification drive mode. (See F–64 OBD DRIVE MODE.) • Is PENDING CODE the same as DTC present?	Yes	Replace PCM, then go to next step. (See F–43 PCM REMOVAL/INSTALLATION.)
		No	Go to next step.
8	**VERIFY AFTER REPAIR PROCEDURE** • Perform “After Repair Procedure”. (See F–66 AFTER REPAIR PROCEDURE.) • Is there any DTC present?	Yes	Go to applicable DTC troubleshooting. (See F–67 DTC TABLE.)
		No	Troubleshooting completed.

DTC P0443

A6E397001086W03

DTC P0443	Evaporative emission control system purge control valve circuit malfunction
DETECTION CONDITION	• PCM monitors input voltages from purge solenoid valve. If voltage at PCM terminal 4U remains low or high, PCM determines that purge solenoid valve circuit has malfunction. **Diagnostic support note** • This is a continuous monitor (CCM). • MIL illuminates if PCM detects the above malfunction condition in two consecutive drive cycles or in one drive cycle while the DTC for the same malfunction has been stored in the PCM. • PENDING CODE is available if PCM detects the above malfunction condition. • FREEZE FRAME DATA is available. • DTC is stored in the PCM memory.
POSSIBLE CAUSE	• Purge solenoid valve malfunction • Connector or terminal malfunction • Short to ground in wiring between purge solenoid valve terminal A and PCM terminal 4U • Open circuit in wiring between main relay and purge solenoid valve terminal B • Open circuit in wiring between purge solenoid valve terminal A and PCM terminal 4U • Short to power circuit between purge solenoid valve terminal A and PCM terminal 4U • PCM malfunction

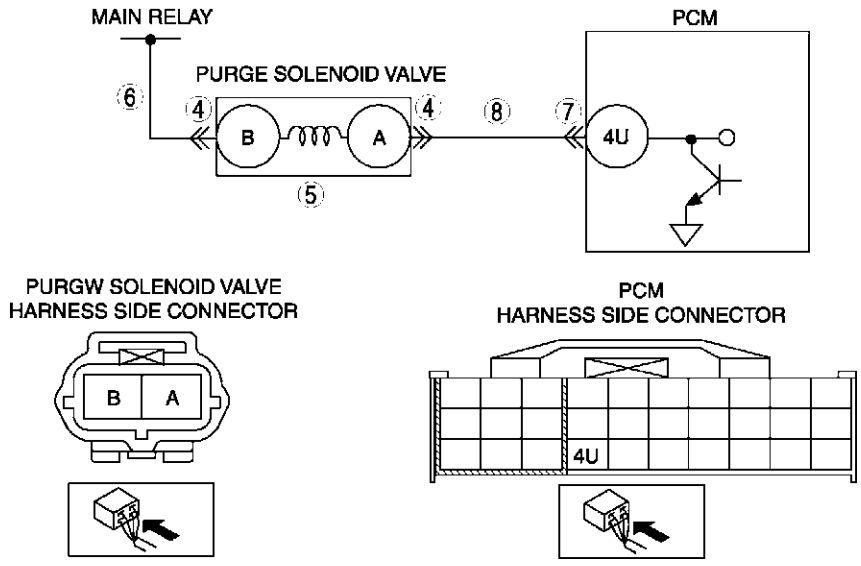

Diagnostic procedure

STEP	INSPECTION		ACTION
1	**PERFORM DTC CONFIRMATION PROCEDURE** • Perform DTC CONFIRMATION PROCEDURE. (See F–66 DTC CONFIRMATION PROCEDURE.) • Is same DTC present?	Yes	Go to next step.
		No	Intermittent concern exists. Go to INTERMITTENT CONCERN TROUBLESHOOTING procedure. (See F–227 INTERMITTENT CONCERN TROUBLESHOOTING.)
2	**CLASSIFY OPEN CIRCUIT OR SHORT TO GROUND MALFUNCTION** • Disconnect purge solenoid valve tube that is connected to intake manifold. • Connect vacuum pump to purge solenoid valve. • Pump vacuum pump several times and stop. • Wait **a few seconds**. • Is vacuum maintained?	Yes	Go to Step 4.
		No	Go to next step.
3	**INSPECT PASSAGE CONTROL OF PURGE SOLENOID VALVE** • Turn ignition key to OFF. • Disconnect purge solenoid valve connector. • Pump vacuum pump several times and wait **a few seconds**. • Is vacuum maintained?	Yes	Repair or replace harness for short to ground, then go to Step 9.
		No	Replace purge solenoid valve, then go to Step 9.
4	**INSPECT PURGE SOLENOID VALVE CONNECTOR FOR POOR CONNECTION** • Turn ignition key to OFF. • Inspect for poor connection (damaged/pulled-out pins, corrosion, etc.). • Is there malfunction?	Yes	Repair or replace terminal, then go to Step 9.
		No	Go to next step.
5	**INSPECT PURGE SOLENOID VALVE** • Perform purge solenoid valve inspection. (See F–39 PURGE SOLENOID VALVE INSPECTION) • Is purge solenoid valve okay?	Yes	Go to next step.
		No	Replace purge solenoid valve, then go to Step 9.
6	**INSPECT PURGE SOLENOID VALVE POWER SUPPLY CIRCUIT FOR OPEN CIRCUIT** • Turn ignition key to ON (Engine OFF). • Measure voltage between purge solenoid valve connector terminal B and body ground. • Is voltage **B+**?	Yes	Go to next step.
		No	Repair or replace harness for open, then go to Step 9.
7	**INSPECT PCM CONNECTOR FOR POOR CONNECTION** • Turn ignition key to OFF. • Disconnect PCM connector. • Inspect for poor connection (damaged/pulled-out pins, corrosion, etc.). • Is there malfunction?	Yes	Repair or replace terminal, then go to Step 9.
		No	Go to next step.
8	**INSPECT PURGE SOLENOID VALVE CONTROL CIRCUIT** • Turn ignition key to ON (Engine OFF). • Measure voltage between purge solenoid valve terminal A (harness-side) and body ground. • Is voltage **B+**?	Yes	Repair or replace harness for short to power, then go to next step.
		No	Inspect for continuity between purge solenoid valve terminal A (harness-side) and PCM terminal 4U (harness-side). • If there is continuity, go to next step. • If there is no continuity, repair or replace harness for open, then go to next step.
9	**VERIFY TROUBLESHOOTING OF DTC P0443 COMPLETED** • Make sure to reconnect all disconnected connectors. • Perform KOER self-test. (See F–66 KOEO/KOER SELF-TEST.) • Is same DTC present?	Yes	Replace PCM, then go to next step. (See F–43 PCM REMOVAL/INSTALLATION.)
		No	Go to next step.
10	**VERIFY AFTER REPAIR PROCEDURE** • Perform “After Repair Procedure”. (See F–66 AFTER REPAIR PROCEDURE.) • Is there any DTC present?	Yes	Go to applicable DTC troubleshooting. (See F–67 DTC TABLE.)
		No	Troubleshooting completed.

F

DTC P0480

A6E397001086W04

DTC P0480	Fan relay control circuit malfunction
DETECTION CONDITION	• PCM monitors cooling fan relay No.2 control signal at PCM terminal 4L. if PCM detects cooling fan relay No.2 control signal does not change coolant temperature **above 100 °C {212 °F}**, PCM determines that cooling fan relay No.2 control has malfunction.
POSSIBLE CAUSE	• cooling fan relay No.2 malfunction • Connector or terminal malfunction • Open circuit in wiring between METER fuse and cooling fan relay No.2 terminal E • Open circuit in wiring between cooling fan relay No.2 terminal A and PCM terminal 4L • Short to ground in wiring between cooling fan relay No.2 terminal A and PCM terminal 4L • Short to power circuit between cooling fan relay No.2 terminal A and PCM terminal 4L • PCM malfunction

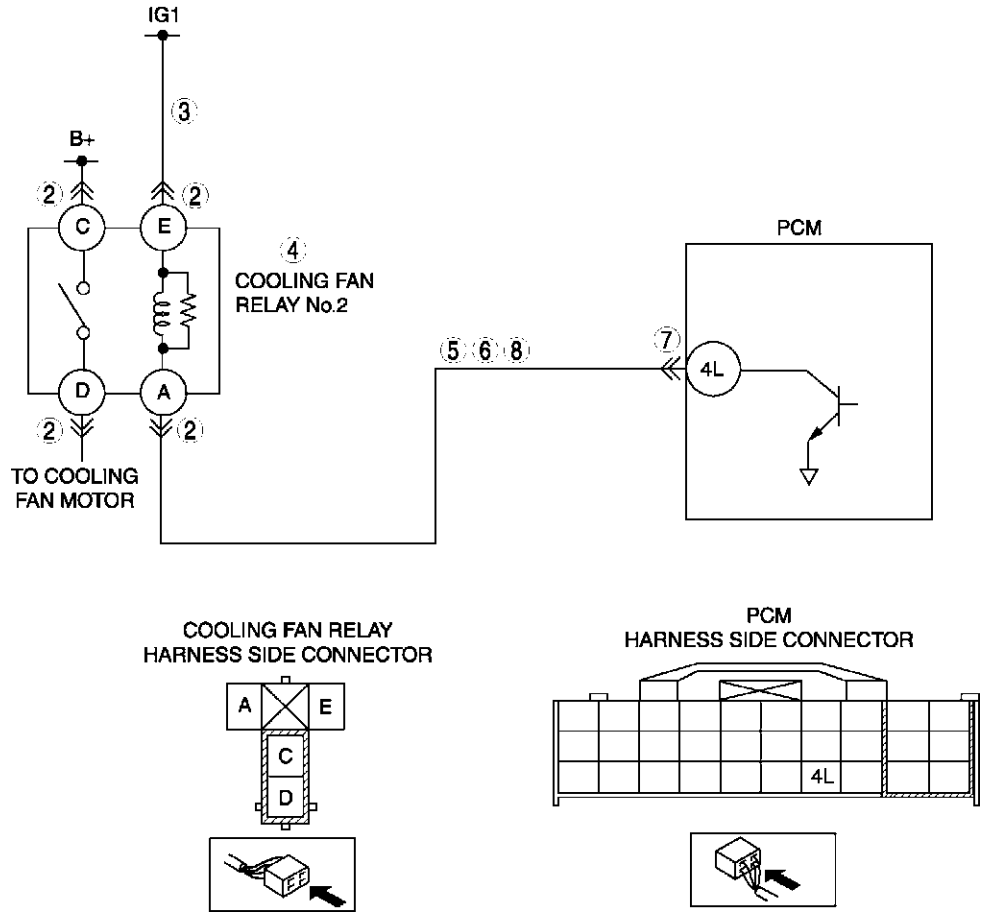

Diagnostic procedure

STEP	INSPECTION		ACTION
1	**PERFORM DTC CONFIRMATION PROCEDURE** • Perform DTC CONFIRMATION PROCEDURE. (See F–66 DTC CONFIRMATION PROCEDURE.) • Is same DTC present?	Yes	Go to next step.
		No	Intermittent concern exists. Go to INTERMITTENT CONCERN TROUBLESHOOTING procedure. (See F–227 INTERMITTENT CONCERN TROUBLESHOOTING.)
2	**INSPECT COOLING FAN RELAY NO.2 CONNECTOR FOR POOR CONNECTION** • Turn ignition key to OFF. • Disconnect cooling fan relay No.2 connector. • Inspect for poor connection (damaged/pulled-out pins, corrosion, etc.). • Is there malfunction?	Yes	Repair or replace terminal and/or connector, then go to Step 9.
		No	Go to next step.

STEP	INSPECTION		ACTION
3	**INSPECT COOLING FAN RELAY NO.2 POWER CIRCUIT FOR OPEN** • Turn ignition switch to ON (Engine OFF). • Measure voltage between cooling fan relay No.2 terminal E (harness side) and body ground. • Is voltage **B+**?	Yes	Go to next step.
		No	Replace or replace harness for open, then go to Step 9.
4	**INSPECT COOLING FAN RELAY NO.2** • Inspect cooling fan relay No.2. (See T–24 RELAY INSPECTION) • Is cooling fan relay No.2 okay?	Yes	Go to next step.
		No	Replace cooling fan relay No.2, then go to Step 9.
5	**INSPECT COOLING FAN RELAY NO.2 CONTROL CIRCUIT FOR SHORT TO POWER** • Measure voltage between cooling fan relay No.2 terminal A (harness side) and body ground. • Is voltage **B+**?	Yes	Repair or replace harness for short to power, then go to Step 9.
		No	Go to next step.
6	**INSPECT COOLING FAN RELAY NO.2 CONTROL CIRCUIT FOR SHORT TO GROUND** • Inspect continuity between cooling fan relay No.2 terminal A (harness side) and body ground. • Is there continuity?	Yes	Repair or replace harness for open, then go to Step 9.
		No	Go to next step.
7	**INSPECT PCM CONNECTOR FOR POOR CONNECTION** • Turn ignition key to OFF. • Disconnect PCM connector. • Inspect for poor connection (damaged/pulled-out pins, corrosion, etc.). • Is there malfunction?	Yes	Repair or replace terminal and/or connector, then go to Step 9.
		No	Go to next step.
8	**INSPECT COOLING FAN RELAY NO.2 CONTROL CIRCUIT FOR OPEN CIRCUIT** • Inspect continuity between cooling fan relay No.2 terminal A and PCM terminal 4L. • Is there continuity?	Yes	Go to next step.
		No	Repair or replace harness for open, then go to next step.
9	**VERIFY TROUBLESHOOTING OF DTC P0480 COMPLETED** • Make sure to reconnect all disconnected connectors. • Clear DTC from PCM memory using WDS or equivalent. • Perform KOEO/KOER self-test. (See F–66 KOEO/KOER SELF-TEST.) • Is same DTC present?	Yes	Replace PCM, then go to next step. (See F–43 PCM REMOVAL/INSTALLATION.)
		No	Go to next step.
10	**VERIFY AFTER REPAIR PROCEDURE** • Perform “After Repair Procedure”. (See F–66 AFTER REPAIR PROCEDURE.) • Is there any DTC present?	Yes	Go to applicable DTC troubleshooting. (See F–67 DTC TABLE.)
		No	Troubleshooting completed.

F

DTC P0500

A6E397001087W01

DTC P0500	Vehicle speed sensor (VSS) circuit malfunction (MTX vehicles without ABS)
DETECTION CONDITION	• Vehicle speed signal does not input after following conditions are met: — Gear is in other than neutral position — Load is above **40%** — Engine speed is **2,000 rpm or above** **Diagnostic support note:** • This is a continuous monitor (CCM). • MIL illuminates if PCM detects the above malfunction conditions in two consecutive drive cycles or in one drive cycle while the DTC for the same malfunction has been stored in the PCM. • PENDING CODE is available if PCM detects the above malfunction condition during first drive cycle. • FREEZE FRAME DATA is available. • DTC is stored in PCM memory.
POSSIBLE CAUSE	• VSS malfunction • ABS/TCS/DCS malfunction • Connector or terminal malfunction • Open circuit between PCM terminal 2I and VSS terminal A • Open circuit between PCM terminal 2L and VSS terminal B • Short to ground between PCM terminal 2I and VSS terminal A • Short to ground between PCM terminal 2L and VSS terminal B • Short to power between PCM terminal 2I and VSS terminal A • Short to power between PCM terminal 2L and VSS terminal B • PCM malfunction

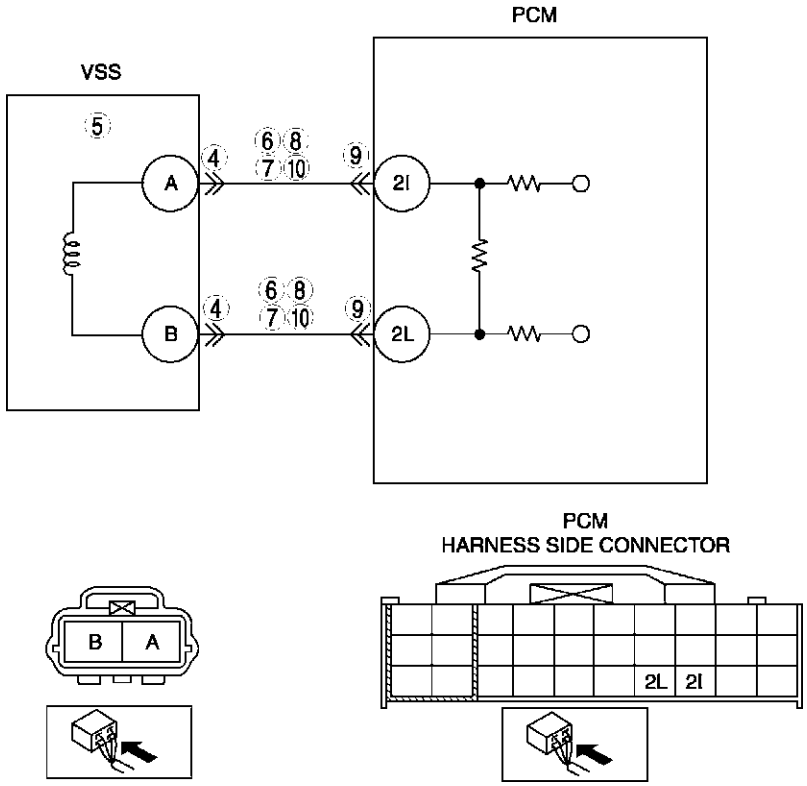

Diagnostic procedure

STEP	INSPECTION		ACTION
1	**VERIFY FREEZE FRAME DATA HAS BEEN RECORDED** • Has FREEZE FRAME PID DATA been recorded?	Yes	Go to next step.
		No	Record FREEZE FRAME PID DATA on repair order, then go to next step.
2	**VERIFY RELATED SERVICE INFORMATION AVAILABILITY** • Check for related Service Information availability. • Is any related Service Information available?	Yes	Perform repair or diagnosis according to available Service Information. • If vehicle is not repaired, go to next step.
		No	Go to next step.

STEP	INSPECTION		ACTION
3	**VERIFY CURRENT INPUT SIGNAL STATUS-IS CONCERN INTERMITTENT OR CONSTANT** • Connect WDS or equivalent to DLC-2. • Start engine. • Access VSS PID using WDS or equivalent. — Vehicle speed **20 km/h {12.4 mph}: 20km/h {12.4 mph}** — Vehicle speed **40 km/h {24.8 mph}: 40km/h {24.8 mph}** • Are PID readings within specification?	Yes	Go to intermittent concern troubleshooting procedure. (See F–227 INTERMITTENT CONCERN TROUBLESHOOTING.)
		No	Go to next step.
4	**INSPECT POOR CONNECTION OF VSS CONNECTOR** • Verify that the VSS connector is connected securely. • Is connector okay?	Yes	Go to next step.
		No	Reconnect the connector, then go to Step 11.
5	**INSPECT VSS** • Perform VSS inspection. (See J–5 VEHICLE SPEEDOMETER SENSOR INSPECTION) • Is VSS okay?	Yes	Go to next step.
		No	Replace VSS, then go to Step 11.
6	**INSPECT VSS CIRCUIT FOR SHORT TO POWER** • Turn ignition key OFF • Disconnect VSS connector. • Turn ignition key ON (Engine OFF) • Measure voltage following terminals: — VSS terminal A — VSS terminal B • Is any voltage reading?	Yes	Repair or replace suspected harness, then go to Step 11.
		No	Go to next step.
7	**INSPECT VSS CIRCUIT FOR SHORT TO GROUND** • Inspect continuity between following terminal and body ground: — VSS terminal A — VSS terminal B • Is there any continuity?	Yes	Repair or replace suspected harness, then go to Step 11.
		No	Go to next step.
8	**INSPECT VSS CIRCUITS FOR SHORTS** • Inspect continuity between VSS connector terminals A and B. • Is there any continuity?	Yes	Repair or replace suspected harness, then go to Step 11.
		No	Go to next step.
9	**INSPECT POOR CONNECTION OF PCM CONNECTOR** • Disconnect PCM connector. • Inspect for poor connection (damaged, pulled-out terminals, corrosion, etc.). • Is there any malfunction?	Yes	Repair terminal, then go to Step 11.
		No	Go to next step.
10	**INSPECT VSS CIRCUIT FOR OPEN CIRCUIT** • Inspect continuity between following circuits: — VSS terminal A and PCM terminal 2I — VSS terminal B and PCM terminal 2L • Is there continuity?	Yes	Inspect VSS pulse wheel for damage. Replace VSS pulse wheel and go to next step.
		No	Repair or replace suspected harness, then go to next step.

F

STEP	INSPECTION		ACTION
11	**VERIFY TROUBLESHOOTING OF DTC P0500 COMPLETED** • Make sure to reconnect all disconnected connectors. • Turn ignition key to ON (Engine OFF). • Clear DTC from PCM memory using WDS or equivalent. • Warm up engine. • Access RPM and LOAD PID using WDS or equivalent. • Drive vehicle under following conditions for **18s**. — Engine speed: **2,000 rpm or above** — Gear: Gear is in other than NEUTRAL — Load: **40% or above** • Is PENDING CODE the same as DTC present?	Yes	Replace PCM, then go to next step. (See F–43 PCM REMOVAL/INSTALLATION.)
		No	Go to next step.
12	**VERIFY AFTER REPAIR PROCEDURE** • Perform “After Repair Procedure”. (See F–66 AFTER REPAIR PROCEDURE.) • Is there any DTC present?	Yes	Go to applicable DTC troubleshooting. (See F–67 DTC TABLE.)
		No	Troubleshooting completed.

DTC P0505

A6E397001087W02

DTC P0505	IAC valve circuit malfunction
DETECTION CONDITION	• PCM cannot control idle speed toward target idle speed while KOER self test.
POSSIBLE CAUSE	• IAC valve circuit malfunction • Air cleaner element clogged • Air intake passage clogged • A/C relay control circuit malfunction • Generator control circuit malfunction • Low engine compression (Over capacity of blow-by gas) • PCM malfunction

Diagnostic procedure

STEP	INSPECTION		ACTION
1	**VERIFY RELATED SERVICE INFORMATION AVAILABILITY** • Check for related Service Information availability. • Is any related Service Information available?	Yes	Perform repair or diagnosis according to available Service Information. • If vehicle is not repaired, go to next step.
		No	Go to next step.
2	**VERIFY RELATED PENDING OR STORED DTCS** • Turn ignition switch to OFF, then ON. (Engine OFF) • verify pending code or stored DTCs using WDS or equivalent. • Does DTC P0511,P2502, P2503 or P2504 present?	Yes	Perform applicable DTC troubleshooting. (See F–67 DTC TABLE.)
		No	Go to next step.
3	**INSPECT IAC VALVE MALFUNCTION** • Start engine. • Disconnect IAC valve connector. • Is engine speed decreased?.	Yes	Go to next step.
		No	Repair IAC valve, then go to Step 9.
4	**INSPECT A/C MAGNETIC CLUTCH OPERATION** **Note** • The following test should be performed for A/C.go to next step for vehicles without A/C • Turn blower motor switch to off. • Is magnetic clutch still on?	Yes	Go to “A/C ALWAYS ON / A/C COMPRESSOR RUNS CONTINUOUSLY.” of ENGINE SYMPTOM TROUBLESHOOTING then go to step 9. (See F–181 ENGINE SYMPTOM TROUBLESHOOTING.)
		No	Go to next step.

STEP	INSPECTION		ACTION
5	**INSPECT GENERATOR CONTROL CIRCUIT MALFUNCTION** • Apply electrical load. • Is engine speed increased?	Yes	Go to next step.
		No	Repair short to power circuit in generator control circuit, then go to Step 9.
6	**INSPECT AIR CLEANER ELEMENT** • remove air cleaner element with engine running. • Is engine speed increased?	Yes	Clean or replace air cleaner element, then go to Step 9.
		No	Go to next step.
7	**INSPECT THROTTLE BODY PASSAGE** • Is throttle body clogged?	Yes	Clean or replace throttle body passage, then go to Step 9.
		No	Go to next step.
8	**INSPECT ENGINE COMPRESSION** • Inspect engine compression. (See B–9 COMPRESSION INSPECTION.) • Is engine compression okay?	Yes	Go to next step.
		No	Overhaul engine, then go to next step.
9	**VERIFY TROUBLESHOOTING OF DTC P0505 COMPLETED** • Make sure to reconnect all disconnected connectors. • Clear DTC using WDS or equivalent. • Perform KOER self-test. (See F–66 KOEO/KOER SELF-TEST.) • Is same DTC present?	Yes	Replace PCM, then go to next step. (See F–43 PCM REMOVAL/INSTALLATION.)
		No	Go to next step.
10	**VERIFY AFTER REPAIR PROCEDURE** • Perform “After Repair Procedure”. (See F–66 AFTER REPAIR PROCEDURE.) • Is there any DTC present?	Yes	Go to applicable DTC troubleshooting. (See F–67 DTC TABLE.)
		No	Troubleshooting completed.

DTC P0506

A6E397001087W03

DTC P0506	Idle control system RPM lower than expected
DETECTION CONDITION	• Actual idle speed is lower than expected by **100 rpm** for **14 s**, when brake pedal is depressed (brake switch is on) and steering wheel is held straight ahead (power steering pressure switch is off). **Note** • If atmospheric pressure is **less than 72.3 kPa {542 mmHg, 21.3 inHg}** or intake air temperature is **below -10 °C {14 °F}**, PCM cancels diagnosis of P0506. **Diagnostic support note** • This is a continuous monitor (CCM). • MIL illuminates if PCM detects the above malfunction conditions in two consecutive drive cycles or in one drive cycle while the DTC for the same malfunction has been stored in the PCM. • PENDING CODE is available if PCM detects the above malfunction condition during first drive cycle. • FREEZE FRAME DATA is available. • DTC is stored in PCM memory.
POSSIBLE CAUSE	• IAC valve malfunction • Air cleaner element clogged • Air intake passage clogged • A/C relay control circuit malfunction • Generator malfunction • Purge solenoid valve malfunction • Low engine compression (Over capacity of blow-by gas) • PCM malfunction

Diagnostic procedure

STEP	INSPECTION		ACTION
1	**VERIFY FREEZE FRAME DATA HAS BEEN RECORDED** • Has FREEZE FRAME DATA been recorded?	Yes	Go to next step.
		No	Record FREEZE FRAME DATA on repair order, then go to next step.
2	**VERIFY RELATED SERVICE INFORMATION AVAILABILITY** • Check for related Service Information availability. • Is any related Service Information available?	Yes	Perform repair or diagnosis according to available Service Information. • If vehicle is not repaired, go to next step.
		No	Go to next step.

STEP	INSPECTION		ACTION
3	**VERIFY RELATED PENDING OR STORED DTCS** • Turn ignition key to OFF, then ON (Engine OFF). • Verify pending code or stored DTCs using WDS or equivalent. • Is other DTC present?	Yes	Repair applicable DTCs. (See F–67 DTC TABLE.)
		No	Go to next step.
4	**INSPECT IAC VALVE MALFUNCTION** • Perform IAC valve inspection. (See F–13 IDLE AIR CONTROL (IAC) VALVE INSPECTION.) • Is IAC valve okay?	Yes	Go to next step.
		No	Replace IAC valve, then go to Step 11.
5	**INSPECT A/C MAGNET CLUTCH OPERATION** • Turn blower motor switch off. • Is magnet clutch still on?	Yes	Refer to “A/C is always on or A/C compressor runs continuously.” of ENGINE SYMPTOM TROUBLESHOOTING, then go to Step 11. (See F–181 ENGINE SYMPTOM TROUBLESHOOTING.)
		No	Go to next step.
6	**INSPECT PURGE SOLENOID VALVE MALFUNCTION** • Perform purge solenoid valve inspection. (See F–39 PURGE SOLENOID VALVE INSPECTION.) • Is purge solenoid valve okay?	Yes	Go to next step.
		No	Replace purge solenoid valve, then go to Step 11.
7	**INSPECT AIR CLEANER ELEMENT** • Remove air cleaner element with engine running. • Is engine speed increased?	Yes	Replace air cleaner element, then go to Step 11.
		No	Go to next step.
8	**INSPECT THROTTLE BODY PASSAGE** • Is throttle body clogged?	Yes	Clean or replace throttle body passage, then go to Step 11.
		No	Go to next step.
9	**INSPECT ENGINE COMPRESSION** • Inspect engine compression. (See B–9 COMPRESSION INSPECTION.) • Is engine compression okay?	Yes	Go to next step.
		No	Overhaul engine, then go to Step 11.
10	**INSPECT GENERATOR** • Perform generator inspection. (See G–7 GENERATOR INSPECTION.) • Is generator okay?	Yes	Go to next step.
		No	Repair or replace related part, then go to next step.
11	**VERIFY TROUBLESHOOTING OF DTC P0506 COMPLETED** • Make sure to reconnect all disconnected connectors. • Start engine. • Clear DTC from PCM memory using WDS or equivalent. • Depress brake pedal for **14 s or more**. • Is PENDING CODE the same as DTC present?	Yes	Replace PCM, then go to next step. (See F–43 PCM REMOVAL/INSTALLATION.)
		No	Go to next step.
12	**VERIFY AFTER REPAIR PROCEDURE** • Perform “After Repair Procedure”. (See F–66 AFTER REPAIR PROCEDURE.) • Is there any DTC present?	Yes	Go to applicable DTC troubleshooting. (See F–67 DTC TABLE.)
		No	Troubleshooting completed.

DTC P0507

A6E397001087W04

DTC P0507	Idle control system RPM higher than expected
DETECTION CONDITION	• Actual idle speed is higher than expected by **200 rpm** for **14 s**, when brake pedal is depressed (brake switch is on) and steering wheel is held straight ahead (power steering pressure switch is off). **Note** • If atmospheric pressure is **less than 72.3 kPa {542 mmHg, 21.3 inHg}** or intake air temperature is **below -10 °C {14 °F}**, PCM cancels diagnosis of P0507. **Diagnostic support note** • This is a continuous monitor (CCM). • MIL illuminates if PCM detects the above malfunction conditions in two consecutive drive cycles or in one drive cycle while the DTC for the same malfunction has been stored in the PCM. • PENDING CODE is available if PCM detects the above malfunction condition during first drive cycle. • FREEZE FRAME DATA is available. • DTC is stored in PCM memory.
POSSIBLE CAUSE	• IAC valve malfunction • Accelerator cable misadjusting • Actuator cable misadjusting • Throttle valve malfunction • Vacuum hose misconnection • PCM malfunction

F

Diagnostic procedure

STEP	INSPECTION		ACTION
1	**VERIFY FREEZE FRAME DATA HAS BEEN RECORDED** • Has FREEZE FRAME DATA been recorded?	Yes	Go to next step.
		No	Record FREEZE FRAME DATA on repair order, then go to next step.
2	**VERIFY RELATED SERVICE INFORMATION AVAILABILITY** • Check for related Service Information availability. • Is any related Service Information available?	Yes	Perform repair or diagnosis according to available Service Information. • If vehicle is not repaired, go to next step.
		No	Go to next step.
3	**VERIFY RELATED PENDING OR STORED DTCS** • Turn ignition key to OFF, then ON (Engine OFF). • Verify pending code or stored DTCs using WDS or equivalent. • Is other DTC present?	Yes	Repair applicable DTCs. (See F–67 DTC TABLE.)
		No	Go to next step.
4	**INSPECT IAC VALVE MALFUNCTION** • Perform IAC valve inspection. (See F–13 IDLE AIR CONTROL (IAC) VALVE INSPECTION.) • Is IAC valve okay?	Yes	Go to next step.
		No	Replace IAC valve, then go to Step 9.
5	**INSPECT ACCELERATOR CABLE FREE PLAY** • Turn ignition key to OFF. • Is accelerator cable free play okay? (See F–16 ACCELERATOR CABLE INSPECTION/ADJUSTMENT.)	Yes	Go to next step.
		No	Adjust accelerator cable free play, then go to Step 9. (See F–16 ACCELERATOR CABLE INSPECTION/ ADJUSTMENT.)
6	**INSPECT ACTUATOR CABLE FREE PLAY** • Is actuator cable adjustments okay?	Yes	Go to next step.
		No	Adjust actuator cable free play, then go to Step 9.
7	**INSPECT VACUUM HOSE CONNECTION** • Are vacuum hoses connecting accurately? (See F–10 VACUUM HOSE ROUTING DIAGRAM.)	Yes	Go to next step.
		No	Reconnect vacuum hose accurately, then go to step 9.
8	**VISUAL INSPECT THROTTLE VALVE** • Remove throttle body. • Is throttle valve fully closed?	Yes	Go to next step.
		No	Clean or replace throttle body, then go to next step.

STEP	INSPECTION		ACTION
9	**VERIFY TROUBLESHOOTING OF DTC P0507 COMPLETED** • Make sure to reconnect all disconnected connectors. • Start engine. • Clear DTC from PCM memory using WDS or equivalent. • Depress brake pedal for **14 s or more**. • Is PENDING CODE the same as DTC present?	Yes	Replace PCM, then go to next step. (See F–43 PCM REMOVAL/INSTALLATION.)
		No	Go to next step.
10	**VERIFY AFTER REPAIR PROCEDURE** • Perform “After Repair Procedure”. (See F–66 AFTER REPAIR PROCEDURE.) • Is there any DTC present?	Yes	Go to applicable DTC troubleshooting. (See F–67 DTC TABLE.)
		No	Troubleshooting completed.

DTC P0511

A6E397001087W05

DTC P0511	IAC valve circuit malfunction
DETECTION CONDITION	• If PCM detects that PCM terminal 4G voltage is above or below threshold* when IAC control duty target is **within 16—70%**, PCM determines that IAC valve circuit has malfunction. *: Detected threshold value depends on battery voltage and IAC control signal duty value. **Diagnostic support note** • This is a continuous monitor (CCM). • MIL illuminates if PCM detects the above malfunction conditions in first consecutive drive cycles. • PENDING CODE is available if PCM detects the above malfunction condition. • FREEZE FRAME DATA is available. • DTC is stored in PCM memory.
POSSIBLE CAUSE	• IAC valve circuit malfunction • Short to ground between IAC valve terminal A (harness-side) and PCM terminal 4G (harness-side) • Short to ground between IAC valve terminal B (harness-side) and PCM terminal 4J (harness-side) • Open circuit between IAC valve terminal A (harness-side) and PCM terminal 4G (harness-side) • Open circuit between IAC valve terminal B (harness-side) and PCM terminal 4J (harness-side) • Short to power between IAC valve terminal A (harness-side) and PCM terminal 4G (harness-side) • Short to power between IAC valve terminal B (harness-side) and PCM terminal 4J (harness-side) • Poor connection of IAC valve connector or PCM connector • PCM malfunction

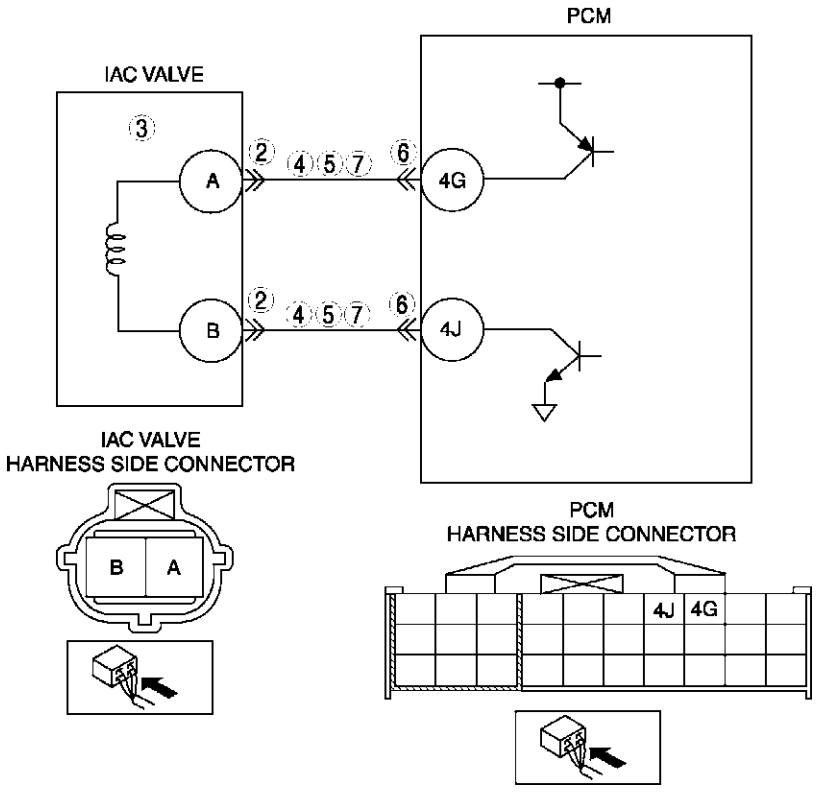

Diagnostic procedure

STEP	INSPECTION		ACTION
1	**PERFORM DTC CONFIRMATION PROCEDURE** • Perform DTC CONFIRMATION PROCEDURE. (See F–66 DTC CONFIRMATION PROCEDURE.) • Is same DTC present?	Yes	Go to next step.
		No	Intermittent concern exists. Go to INTERMITTENT CONCERN TROUBLESHOOTING procedure. (See F–227 INTERMITTENT CONCERN TROUBLESHOOTING.)
2	**INSPECT POOR CONNECTION OF IAC VALVE CONNECTOR** • Turn ignition key to OFF. • Disconnect IAC valve connector. • Inspect for poor connection (damaged, pulled-out terminals, corrosion, etc.). • Are there any malfunctions?	Yes	Repair or replace terminal, then go to Step 8.
		No	Go to next step.
3	**INSPECT IAC VALVE ELECTRICAL MALFUNCTION** • Inspect IAC valve. (See F–13 IDLE AIR CONTROL (IAC) VALVE INSPECTION.) • Is IAC valve okay?	Yes	Go to next step.
		No	Replace IAC valve, then go to Step 8.
4	**INSPECT CONTROL CIRCUIT FOR SHORT TO POWER** • Turn ignition key to ON (Engine OFF). • Measure voltage between following terminal and body ground: — IAC valve terminal A — IAC valve terminal B • Is there voltage **B+**?	Yes	Repair or replace harness, then go to Step 8.
		No	Go to next step.
5	**INSPECT CONTROL CIRCUIT FOR SHORT TO GROUND** • Turn ignition key to OFF. • Inspect continuity between following terminals and body ground: — IAC valve terminal A — IAC valve terminal B • Is there any continuity?	Yes	Repair or replace harness, then go to Step 8.
		No	Go to next step.
6	**INSPECT POOR CONNECTION OF PCM CONNECTOR** • Turn ignition key to OFF • Disconnect PCM connector. • Inspect for poor connection (damaged, pulled-out terminals, corrosion, etc.). • Are there any malfunctions?	Yes	Repair terminal, then go to Step 8.
		No	Go to next step.
7	**INSPECT CONTROL CIRCUIT MALFUNCTION FOR OPEN CIRCUIT** • Inspect continuity following terminals: — Between IAC valve terminal A and PCM terminal 4G — Between IAC valve terminal B and PCM terminal 4J • Is there any continuity?	Yes	Repair or replace harness, then go to next step.
		No	Go to next step.
8	**VERIFY TROUBLESHOOTING OF DTC P0511 COMPLETED** • Make sure to reconnect all disconnected connectors. • Clear DTC using WDS or equivalent. • Perform KOEO/KOER self-test. (See F–66 KOEO/KOER SELF-TEST.) • Is same DTC present?	Yes	Replace PCM, then go to next step. (See F–43 PCM REMOVAL/INSTALLATION.)
		No	Go to next step.
9	**VERIFY AFTER REPAIR PROCEDURE** • Perform “After Repair Procedure”. (See F–66 AFTER REPAIR PROCEDURE.) • Is there any DTC present?	Yes	Go to applicable DTC troubleshooting. (See F–67 DTC TABLE.)
		No	Troubleshooting completed.

F

DTC P0550

A6E397001087W06

DTC P0550	PSP switch circuit malfunction
DETECTION CONDITION	• PCM monitors PSP switch signal at PCM terminal 1Z. If input voltage is low (switch stays on) for **1 minute** when VSS is **above 60 km/h {37.3 mph}** and ECT is **above 60 °C {140 °F}**, PCM determines that PSP switch circuit has malfunction. **Diagnostic support note** • This is a continuous monitor (CCM). • MIL illuminates if PCM detects the above malfunction conditions in two consecutive drive cycles or in one drive cycle while the DTC for the same malfunction has been stored in the PCM. • PENDING CODE is available if PCM detects the above malfunction condition during first drive cycle. • FREEZE FRAME DATA is available. • DTC is stored in PCM memory.
POSSIBLE CAUSE	• PSP switch malfunction • Connector or terminal malfunction • Short to ground in wiring between PSP switch terminal and PCM terminal 1Z • Open circuit in wiring between PSP switch terminal and PCM terminal 1Z • PCM malfunction

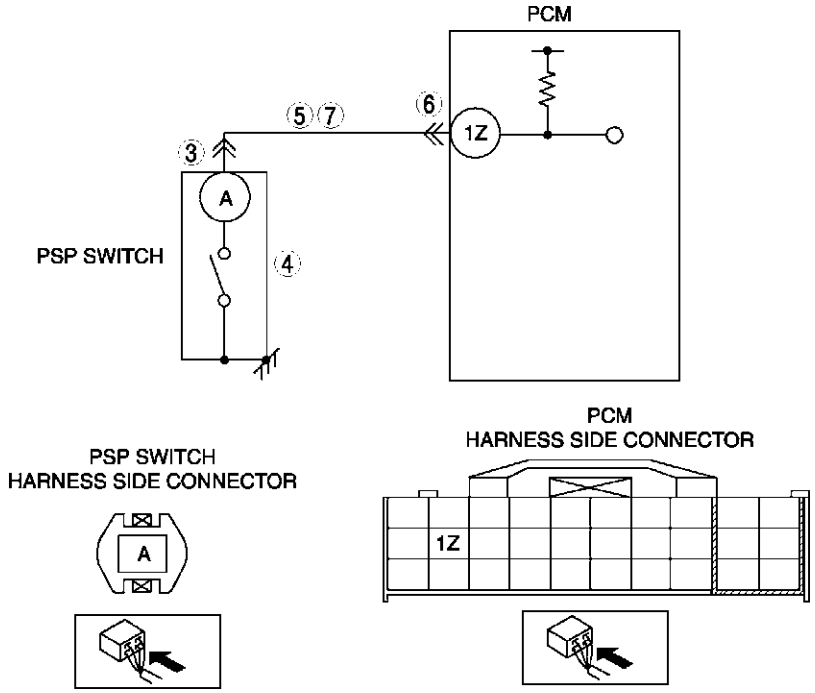

Diagnostic procedure

STEP	INSPECTION		ACTION
1	**VERIFY FREEZE FRAME DATA HAS BEEN RECORDED** • Has FREEZE FRAME DATA been recorded?	Yes	Go to next step.
		No	Record FREEZE FRAME DATA on repair order, then go to next step.
2	**VERIFY RELATED SERVICE INFORMATION AVAILABILITY** • Check for related Service Information availability. • Is any related Service Information available?	Yes	Perform repair or diagnosis according to available Service Information. • If vehicle is not repaired, go to next step.
		No	Go to next step.
3	**INSPECT POOR CONNECTION OF PSP CONNECTOR** • Turn ignition key to OFF. • Disconnect PSP connector. • Inspect for poor connection (damaged, pulled-out terminals, corrosion, etc.). • Are there any malfunctions?	Yes	Repair or replace terminal, then go to Step 8.
		No	Go to next step.

STEP	INSPECTION		ACTION
4	**INSPECT PSP SWITCH** • Perform PSP switch inspection. (See F–58 POWER STEERING PRESSURE (PSP) SWITCH INSPECTION.) • Is PSP switch okay?	Yes	Go to next step.
		No	Replace PSP switch, then go to Step 8.
5	**INSPECT PSP SWITCH SIGNAL CIRCUIT FOR SHORT TO GROUND** • Disconnect PCM connector. • Inspect continuity between PSP switch terminal (harness-side) and body ground. • Is there any continuity?	Yes	Repair or replace harness for short to ground, then go to Step 8.
		No	Go to next step.
6	**INSPECT POOR CONNECTION OF PCM CONNECTOR** • Turn ignition key to OFF • Disconnect PCM connector. • Inspect for poor connection (damaged, pulled-out terminals, corrosion, etc.). • Are there any malfunctions?	Yes	Repair terminal, then go to Step 8.
		No	Go to next step.
7	**INSPECT SIGNAL CIRCUIT MALFUNCTION FOR OPEN CIRCUIT** • Inspect continuity between PSP terminal A (harness-side) and PCM terminal 1Z. • Is there any continuity?	Yes	Repair or replace harness, then go to next step.
		No	Go to next step.
8	**VERIFY TROUBLESHOOTING OF DTC P0550 COMPLETED** • Make sure to reconnect all disconnected connectors. • Start engine. • Clear DTC from PCM memory using WDS or equivalent. • Drive vehicle **above 60 km/h {37.3 mph}** for **1 min**. • Verify that ECT PID **above 60 °C {140 °F}** using WDS or equivalent. • Is PENDING CODE the same as DTC present?	Yes	Replace PCM, then go to next step. (See F–43 PCM REMOVAL/INSTALLATION.)
		No	Go to next step.
9	**VERIFY AFTER REPAIR PROCEDURE** • Perform “After Repair Procedure”. (See F–66 AFTER REPAIR PROCEDURE.) • Is there any DTC present?	Yes	Go to applicable DTC troubleshooting. (See F–67 DTC TABLE.)
		No	Troubleshooting completed.

F

DTC P0602

A6E397001088W01

DTC P0602	PCM programming error
DETECTION CONDITION	• No configuration data in PCM **Note** • If “PCM CONFIGURATION” is successful, the PCM stored DTC P0602 and illuminates the MIL (System i s normal) Clear the DTC P0602 using WDS or equivalent after “PCM CONFIGURATION”. • MIL goes off after three drive cycles with no failure (DTCs remain in PCM).
POSSIBLE CAUSE	• Complete configuration has not been completed. • PCM malfunction

Diagnostic procedure

STEP	INSPECTION		ACTION
1	**PERFORM DTC CONFIRMATION PROCEDURE** • Perform DTC CONFIRMATION PROCEDURE. (See F–66 DTC CONFIRMATION PROCEDURE.) • Is same DTC present?	Yes	Perform PCM configuration procedure, then go to next step. (See F–50 PCM CONFIGURATION.)
		No	Intermittent concern exists. Go to INTERMITTENT CONCERN TROUBLESHOOTING procedure. (See F–227 INTERMITTENT CONCERN TROUBLESHOOTING.)
2	**VERIFY TROUBLESHOOTING OF DTC P0602 COMPLETED** • Make sure to reconnect all disconnected connectors. • Turn ignition key to ON (Engine OFF). • Clear DTC from PCM memory using WDS or equivalent. • Perform KOEO/KOER self-test. (See F–66 KOEO/KOER SELF-TEST.) • Is same DTC present?	Yes	Replace PCM, then go to next step. (See F–43 PCM REMOVAL/INSTALLATION.)
		No	Go to next step.
3	**VERIFY AFTER REPAIR PROCEDURE** • Perform “After Repair Procedure”. (See F–66 AFTER REPAIR PROCEDURE.) • Is there any DTC present?	Yes	Go to applicable DTC troubleshooting. (See F–67 DTC TABLE.)
		No	Troubleshooting completed.

DTC P0610

A6E397001088W02

DTC P0610	Control module vehicle options error
DETECTION CONDITION	• PCM data configuration error
POSSIBLE CAUSE	• Configuration procedure has not been completed • PCM malfunction

Diagnostic procedure

STEP	INSPECTION		ACTION
1	**PERFORM DTC CONFIRMATION PROCEDURE** • Perform DTC CONFIRMATION PROCEDURE. (See F–66 DTC CONFIRMATION PROCEDURE.) • Is same DTC present?	Yes	Perform PCM configuration procedure, then go to next step. (See F–50 PCM CONFIGURATION.)
		No	Intermittent concern exists. Go to INTERMITTENT CONCERN TROUBLESHOOTING procedure. (See F–227 INTERMITTENT CONCERN TROUBLESHOOTING.)
2	**VERIFY TROUBLESHOOTING OF DTC P0610 COMPLETED** • Make sure to reconnect all disconnected connectors. • Turn ignition key to ON (Engine OFF). • Clear DTC from PCM memory using WDS or equivalent. • Perform KOEO/KOER self-test. (See F–66 KOEO/KOER SELF-TEST.) • Is same DTC present?	Yes	Replace PCM, then go to next step. (See F–43 PCM REMOVAL/INSTALLATION.)
		No	Go to next step.
3	**VERIFY AFTER REPAIR PROCEDURE** • Perform “After Repair Procedure”. (See F–66 AFTER REPAIR PROCEDURE.) • Is there any DTC present?	Yes	Go to applicable DTC troubleshooting. (See F–67 DTC TABLE.)
		No	Troubleshooting completed.

DTC P0661

A6E397001088W03

DTC P0661	Variable intake-air system (VIS) contol solenoid valve circuit low input
DETECTION CONDITION	• PCM monitors VIS control solenoid valve control signal at PCM terminal 4R. If PCM turns VIS control solenoid valve off but voltage at PCM terminal 4R still remains low, PCM determines that VIS control solenoid valve circuit has malfunction.
POSSIBLE CAUSE	• VIS control solenoid valve malfunction • Open circuit in wiring between main relay and VIS control solenoid valve terminal B • Open circuit in wiring between VIS control solenoid valve terminal A and PCM terminal 4R • Short to ground in wiring between VIS control solenoid valve terminal A and PCM terminal 4R • Connector or terminal malfunction • PCM malfunction

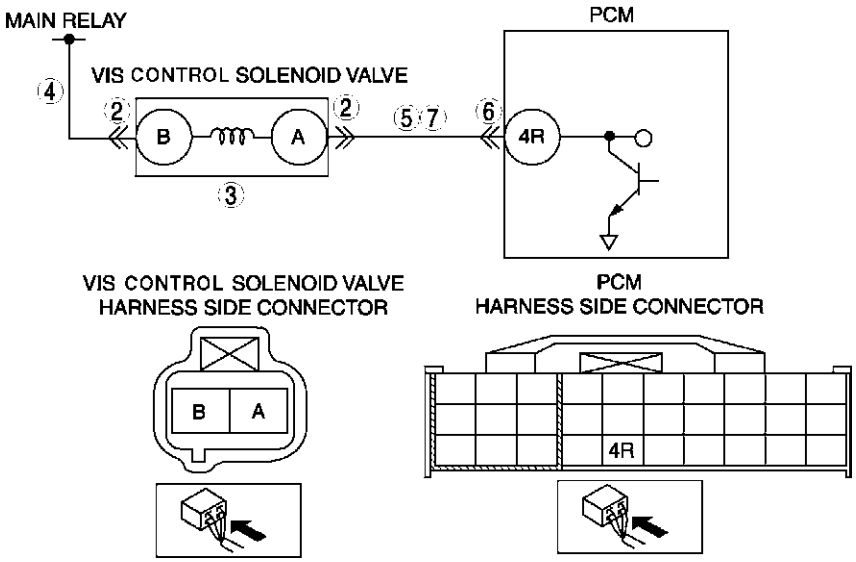

Diagnostic procedure

STEP	INSPECTION		ACTION
1	**PERFORM DTC CONFIRMATION PROCEDURE** • Perform DTC CONFIRMATION PROCEDURE. (See F–66 DTC CONFIRMATION PROCEDURE.) • Is same DTC present?	Yes	Go to next step.
		No	Intermittent concern exists. Go to INTERMITTENT CONCERN TROUBLESHOOTING procedure. (See F–227 INTERMITTENT CONCERN TROUBLESHOOTING.)
2	**INSPECT VIS CONTROL SOLENOID VALVE CONNECTOR FOR POOR CONNECTION** • Turn ignition key to OFF. • Disconnect VIS control solenoid valve connector. • Inspect for poor connection (damaged/pulled-out pins, corrosion, etc.). • Is there malfunction?	Yes	Repair or replace terminal, then go to Step 8.
		No	Go to next step.
3	**INSPECT VIS CONTROL SOLENOID VALVE MALFUNCTION** • Perform VIS control solenoid valve inspection. (See F–14 VARIABLE INTAKE-AIR SYSTEM (VIS) CONTROL SOLENOID VALVE INSPECTION (L3).) • Is VIS solenoid valve okay?	Yes	Go to next step.
		No	Replace VIS control solenoid valve, then go to step 8.
4	**INSPECT VIS CONTROL SOLENOID VALVE POWER SUPPLY CIRCUIT FOR OPEN CIRCUIT** • Turn ignition key to ON (Engine OFF). • Measure voltage between VIS control solenoid valve terminal B (harness-side) and body ground. • Is voltage **B+**?	Yes	Go to next step.
		No	Repair or replace harness for open, then go to Step 8.

STEP	INSPECTION		ACTION
5	**INSPECT VIS CONTROL SOLENOID VALVE CONTROL CIRCUIT FOR SHORT TO GROUND** • Inspect continuity between VIS control solenoid valve terminal A (harness-side) and body ground. • Is there continuity?	Yes	Repair or replace harness for short to ground, then go to Step 8.
		No	Go to next step.
6	**INSPECT PCM CONNECTOR FOR POOR CONNECTION** • Disconnect PCM connector. • Inspect for poor connection at terminal 4R. (damaged/pulled-out pins, corrosion, etc.). • Is there malfunction?	Yes	Repair terminal, then go to Step 8.
		No	Go to next step.
7	**INSPECT VIS CONTROL SOLENOID VALVE CONTROL CIRCUIT FOR OPEN** • Inspect for continuity between VIS control solenoid valve terminal B (harness-side) and PCM terminal 4R (harness-side). • Is there continuity?	Yes	Go to next step.
		No	Repair or replace harness for open, then go to next step.
8	**VERIFY TROUBLESHOOTING OF DTC P0661 COMPLETED** • Make sure to reconnect all disconnected connectors. • Turn ignition key to ON (Engine OFF). • Clear DTC from PCM memory using WDS or equivalent. • Perform KOEO/KOER self-test. (See F–66 KOEO/KOER SELF-TEST.) • Is same DTC present?	Yes	Replace PCM, then go to next step. (See F–43 PCM REMOVAL/INSTALLATION.)
		No	Go to next step.
9	**VERIFY AFTER REPAIR PROCEDURE** • Perform “After Repair Procedure”. (See F–66 AFTER REPAIR PROCEDURE.) • Is there any DTC present?	Yes	Go to applicable DTC troubleshooting. (See F–67 DTC TABLE.)
		No	Troubleshooting completed.

DTC P0662

A6E397001088W04

DTC P0662	**Variable intake-air system (VIS) control solenoid valve circuit high input**
DETECTION CONDITION	• PCM monitors VIS control solenoid valve control signal at PCM terminal 4R. If PCM turns VIS control solenoid valve on but voltage at PCM terminal 4R still remains high, PCM determines that VIS control solenoid valve circuit has malfunction.
POSSIBLE CAUSE	• VIS control solenoid valve malfunction • Short to power circuit between VIS control solenoid valve terminal B and PCM terminal 4R • Shorted VIS control solenoid valve or PCM connector • PCM malfunction

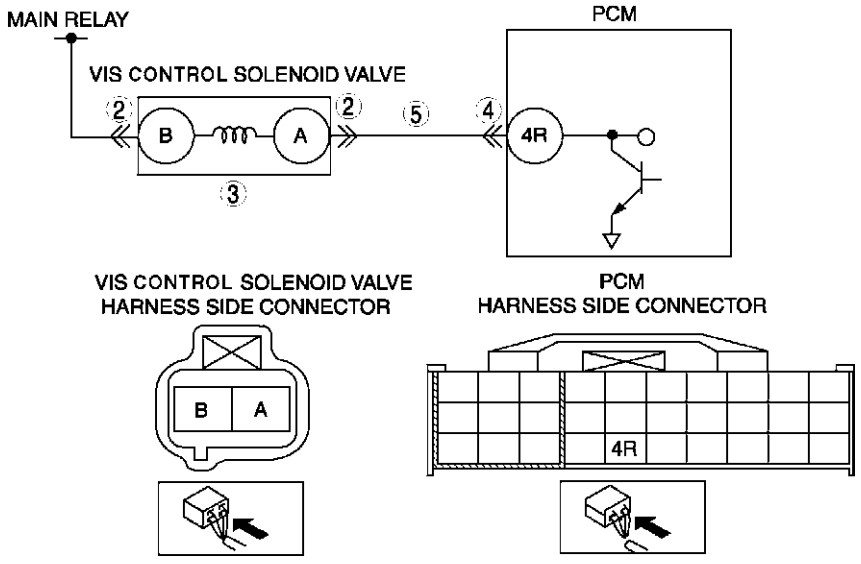

Diagnostic procedure

STEP	INSPECTION		ACTION
1	**PERFORM DTC CONFIRMATION PROCEDURE** • Perform DTC CONFIRMATION PROCEDURE. (See F–66 DTC CONFIRMATION PROCEDURE.) • Is same DTC present?	Yes	Go to next step.
		No	Intermittent concern exists. Go to INTERMITTENT CONCERN TROUBLESHOOTING procedure. (See F–227 INTERMITTENT CONCERN TROUBLESHOOTING.)
2	**INSPECT VIS CONTROL SOLENOID VALVE CONNECTOR FOR POOR CONNECTION** • Turn ignition key to OFF. • Disconnect VIS control solenoid valve connector. • Inspect for poor connection (damaged/pulled-out pins, corrosion, etc.). • Is there malfunction?	Yes	Repair or replace terminal, then go to Step 6.
		No	Go to next step.
3	**INSPECT VIS CONTROL SOLENOID VALVE MALFUNCTION** • Perform VIS control solenoid valve inspection. (See F–14 VARIABLE INTAKE-AIR SYSTEM (VIS) CONTROL SOLENOID VALVE INSPECTION (L3)) • Is VIS solenoid valve okay?	Yes	Go to next step.
		No	Replace VIS control solenoid valve, then go to Step 6.
4	**INSPECT PCM CONNECTOR FOR POOR CONNECTION** • Turn ignition key to OFF. • Disconnect PCM connector. • Inspect for poor connection at terminal 4R. (damaged/pulled-out pins, corrosion, etc.). • Is there malfunction?	Yes	Repair terminal, then go to Step 6.
		No	Go to next step.
5	**INSPECT VIS CONTROL SOLENOID VALVE CONTROL CIRCUIT SHORT TO POWER** • Turn ignition key to ON (Engine OFF). • Measure voltage between VIS control solenoid valve terminal B (harness-side) and body ground. • Is voltage **B+**?	Yes	Repair or replace harness for open, then go to next step.
		No	Go to next step.
6	**VERIFY TROUBLESHOOTING OF DTC P0662 COMPLETED** • Make sure to reconnect all disconnected connectors. • Turn ignition key to ON (Engine OFF). • Clear DTC from PCM memory using WDS or equivalent. • Perform KOEO/KOER self-test. (See F–66 KOEO/KOER SELF-TEST.) • Is same DTC present?	Yes	Replace PCM, then go to next step. (See F–43 PCM REMOVAL/INSTALLATION.)
		No	Go to next step.
7	**VERIFY AFTER REPAIR PROCEDURE** • Perform “After Repair Procedure”. (See F–66 AFTER REPAIR PROCEDURE.) • Is there any DTC present?	Yes	Go to applicable DTC troubleshooting. (See F–67 DTC TABLE.)
		No	Troubleshooting completed.

F

DTC P0703

A6E397001089W01

DTC P0703	Brake switch input malfunction
DETECTION CONDITION	• PCM monitors changes in input voltage from brake switch. If PCM does not detect PCM terminal 1K voltage changes while alternately accelerating and decelerating **8 times**, PCM determines that neutral switch circuit has malfunction. **Diagnostic support note** • This is a continuous monitor (CCM). • MIL illuminates if PCM detects the above malfunction condition in two consecutive drive cycles or in one drive cycle while the DTC for the same malfunction has been stored in the PCM. • PENDING CODE is available if PCM detects the above malfunction condition during first drive cycle. • FREEZE FRAME DATA is available. • DTC is stored in PCM memory.
POSSIBLE CAUSE	• Brake switch malfunction • Poor connection of brake switch connector or PCM connector. • Short to power between brake switch terminal D and PCM connector terminal 1K. • Open harness between brake switch terminal D and PCM connector terminal 1K. • Open harness between battery positive terminal and brake switch terminal B. • PCM malfunction

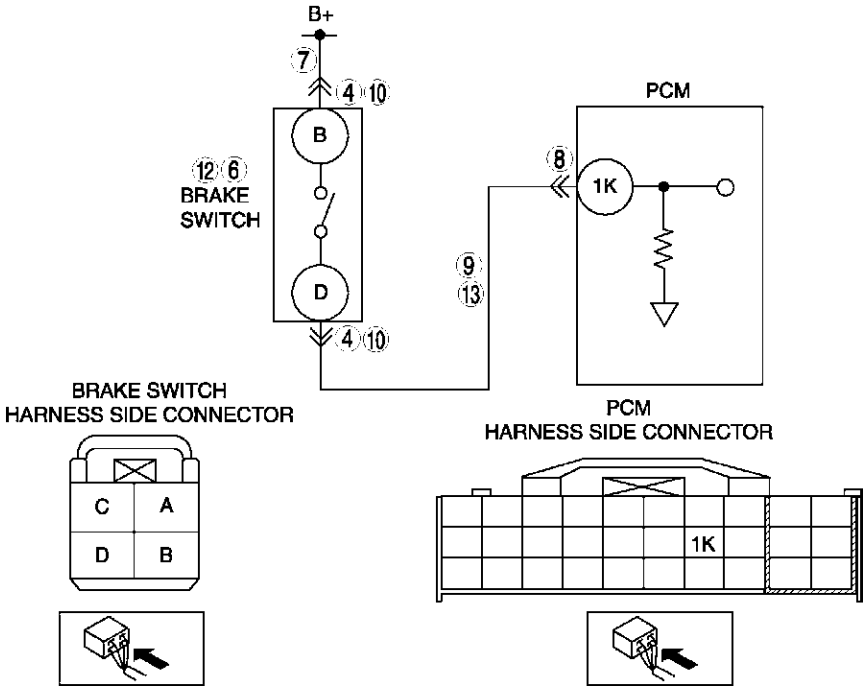

Diagnostic procedure

STEP	INSPECTION		ACTION
1	**VERIFY FREEZE FRAME DATA HAS BEEN RECORDED** • Has FREEZE FRAME DATA been recorded?	Yes	Go to next step.
		No	Record FREEZE FRAME DATA on repair order, then go to next step.
2	**VERIFY RELATED SERVICE INFORMATION AVAILABILITY** • Check for related Service Information availability. • Is any related Service Information available?	Yes	Perform repair or diagnosis according to available Service Information. • If vehicle is not repaired, go to next step.
		No	Go to next step.
3	**CLASSIFY HIGH INPUT OR LOW INPUT** • Connect WDS or equivalent to DLC-2. • Access BOO PID. • Verify BOO PID during brake pedal operation. • Is BOO PID always OFF?	Yes	Go to Next step.
		No	Go to Step 10.

STEP	INSPECTION		ACTION
4	**INSPECT BRAKE SWITCH CONNECTOR FOR POOR CONNECTION** • Turn ignition switch to OFF. • Disconnect brake switch connector. • Inspect for poor connection (damaged/pulled-out terminals, corrosion, etc.). • Is there malfunction?	Yes	Repair or replace terminal, then go to Step 14.
		No	Go to next step.
5	**CLASSIFY BRAKE SWITCH OR CIRCUIT** • Connect WDS or equivalent to DLC-2. • Access BOO PID. • Connect a jumper wire between brake switch terminal A and B. • Is BOO PID on?	Yes	Go to next step.
		No	Go to Step 7.
6	**INSPECT BRAKE SWITCH** • Perform brake switch inspection. (See P–8 BRAKE SWITCH INSPECTION.) • Is brake switch okay?	Yes	Go to Step 14.
		No	Replace brake switch, then go to Step 14.
7	**INSPECT BRAKE SWITCH POWER CIRCUIT FOR OPEN CIRCUIT** • Measure voltage between brake switch connector terminal B and body ground. • Is voltage **B+**?	Yes	Go to next step.
		No	Repair or replace brake switch power circuit for open, then Go to Step 14.
8	**INSPECT PCM CONNECTOR FOR POOR CONNECTION** • Turn ignition switch to OFF. • Disconnect PCM connector. • Inspect for poor connection (damaged/pulled-out terminals, corrosion, etc.). • Is there malfunction?	Yes	Repair or replace terminal, then go to Step 14.
		No	Go to next step.
9	**INSPECT BRAKE SWITCH SIGNAL CIRCUIT FOR OPEN CIRCUIT** • Inspect continuity between brake switch terminal D and PCM terminal 1K. • Is there any continuity?	Yes	Repair or replace harness for open, then go to Step 14.
		No	Go to Step 14.
10	**INSPECT BRAKE SWITCH CONNECTOR FOR POOR CONNECTION** • Turn ignition switch to OFF. • Disconnect brake switch connector. • Inspect for poor connection (damaged/pulled-out terminals, corrosion, etc.). • Is there malfunction?	Yes	Repair or replace terminal, then go to Step 14.
		No	Go to next step.
11	**CLASSIFY BRAKE SWITCH OR CIRCUIT** • Connect WDS or equivalent to DLC-2. • Access BOO PID. • Verify that BOO PID changes from ON to OFF when brake switch connector disconnected. • Does BOO PID change from ON to OFF?	Yes	Go to next step.
		No	Go to Step 13.
12	**INSPECT BRAKE SWITCH** • Perform brake switch inspection. (See P–8 BRAKE SWITCH INSPECTION.) • Is brake switch okay?	Yes	Go to Step 14.
		No	Replace brake switch, then go to Step 14.
13	**INSPECT BRAKE SWITCH SIGNAL CIRCUIT FOR SHORT TO POWER** • Measure voltage between brake switch connector terminal D and body ground. • Is voltage **B+**?	Yes	Repair or replace harness for short to power, then go to Step 14.
		No	Go to next step.

F

STEP	INSPECTION		ACTION
14	**VERIFY TROUBLESHOOTING OF DTC P0703 COMPLETED** • Make sure to reconnect all disconnected connectors. • Clear DTC from memory using WDS or equivalent. • Drive vehicle **30 km/h {18.6 mph} or more**. • Depress and release brake pedal **more than 8 times** while driving vehicle. • Is PENDING CODE the same as DTC present?	Yes	Replace PCM, then go to next step. (See F–43 PCM REMOVAL/INSTALLATION.)
		No	Go to next step.
15	**VERIFY AFTER REPAIR PROCEDURE** • Perform “After Repair Procedure”. (See F–66 AFTER REPAIR PROCEDURE.) • Is there any DTC present?	Yes	Go to applicable DTC troubleshooting. (See F–67 DTC TABLE.)
		No	Troubleshooting completed.

DTC P0704

A6E397001089W02

DTC P0704	Clutch switch circuit malfunction
DETECTION CONDITION	• PCM monitors changes in input voltage from clutch switch. If PCM does not detect PCM terminal 1R voltage changes while running vehicle with vehicle speed **below 30 km/h {19mph} 8 times** alternately, PCM determines that clutch switch circuit has malfunction. **Diagnostic support note** • This is a continuous monitor (CCM). • MIL illuminates if PCM detects the above malfunction condition in two consecutive drive cycles or in one drive cycle while the DTC for the same malfunction has been stored in the PCM. • PENDING CODE is available if PCM detects the above malfunction condition during first drive cycle. • FREEZE FRAME DATA is available. • DTC is stored in PCM memory.
POSSIBLE CAUSE	• Clutch switch malfunction • Poor connection of clutch switch connector or PCM connector. • Short to ground between clutch switch terminal B and PCM connector terminal 1R. • Open harness between clutch switch terminal B and PCM connector terminal 1R. • Open harness between ground and clutch switch terminal D. • PCM malfunction

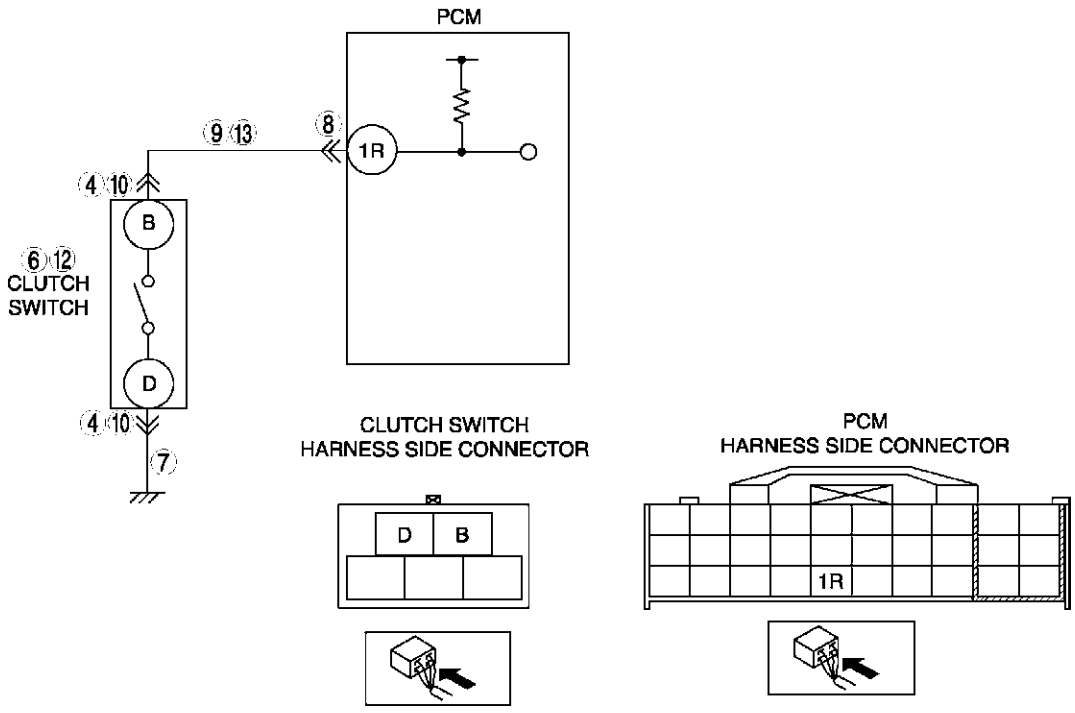

Diagnostic procedure

STEP	INSPECTION		ACTION
1	**VERIFY FREEZE FRAME DATA HAS BEEN RECORDED** • Has FREEZE FRAME DATA been recorded?	Yes	Go to next step.
		No	Record FREEZE FRAME DATA on repair order, then go to next step.
2	**VERIFY RELATED REPAIR INFORMATION AVAILABILITY** • Check for related Service information availability. • Is any related Service information available?	Yes	Perform repair or diagnosis according to available Service information. • If vehicle is not repaired, go to next step.
		No	Go to next step.
3	**CLASSIFY HIGH INPUT OR LOW INPUT** • Connect WDS or equivalent to DLC-2. • Access CPP PID. • Verify CPP PID during clutch pedal operation. • Is CPP PID always OFF?.	Yes	Go to Next step.
		No	Go to Step 10.
4	**INSPECT CLUTCH SWITCH CONNECTOR FOR POOR CONNECTION** • Turn ignition switch to OFF. • Disconnect clutch switch connector. • Inspect for poor connection (damaged/pulled-out terminals, corrosion, etc.). • Is there malfunction?	Yes	Repair or replace terminal, then go to Step 14.
		No	Go to next step.
5	**CLASSIFY CLUTCH SWITCH OR CIRCUIT** • Connect WDS or equivalent to DLC-2. • Access CPP PID. • Connect a jumper wire between clutch switch terminal B and D. • Is CPP PID on?	Yes	Go to next step.
		No	Go to Step 7.
6	**INSPECT CLUTCH SWITCH** • Perform clutch switch inspection. (See F–59 CLUTCH SWITCH INSPECTION.) • Is clutch switch okay?	Yes	Go to Step 14.
		No	Replace clutch switch, then go to Step 14.
7	**INSPECT CLUTCH SWITCH GROUND CIRCUIT FOR OPEN CIRCUIT** • Inspect continuity between clutch switch terminal D and ground. • Is there any continuity?	Yes	Go to next step.
		No	Repair or replace clutch switch power circuit for open, then Go to Step 14.
8	**INSPECT PCM CONNECTOR FOR POOR CONNECTION** • Turn ignition switch to OFF. • Disconnect PCM connector. • Inspect for poor connection (damaged/pulled-out terminals, corrosion, etc.). • Is there malfunction?	Yes	Repair or replace terminal, then go to Step 14.
		No	Go to next step.
9	**INSPECT CLUTCH SWITCH SIGNAL CIRCUIT FOR OPEN CIRCUIT** • Inspect continuity between clutch switch terminal B and PCM terminal 1R. • Is there any continuity?	Yes	Repair or replace harness for open, then go to Step 14.
		No	Go to Step 14.
10	**INSPECT CLUTCH SWITCH CONNECTOR FOR POOR CONNECTION** • Turn ignition switch to OFF. • Disconnect clutch switch connector. • Inspect for poor connection (damaged/pulled-out terminals, corrosion, etc.). • Is there malfunction?	Yes	Repair or replace terminal, then go to Step 14.
		No	Go to next step.
11	**CLASSIFY CLUTCH SWITCH OR CIRCUIT** • Connect WDS or equivalent to DLC-2. • Access CPP PID. • Verify that CPP PID changes from ON to OFF when clutch switch connector disconnected. • Does CPP PID change from ON to OFF?	Yes	Go to next step.
		No	Go to Step 13.
12	**INSPECT CLUTCH SWITCH** • Perform clutch switch inspection. (See F–59 CLUTCH SWITCH INSPECTION.) • Is clutch switch okay?	Yes	Go to Step 14.
		No	Replace clutch switch, then go to Step 14.

F

STEP	INSPECTION		ACTION
13	**INSPECT CLUTCH SWITCH SIGNAL CIRCUIT FOR SHORT TO GROUND** • Inspect continuity between clutch switch terminal B and ground. • Is there any continuity?	Yes	Repair or replace harness for short to ground, then go to Step 14.
		No	Go to Next step.
14	**VERIFY TROUBLESHOOTING OF DTC P0704 COMPLETED** • Make sure to reconnect all disconnected connectors. • Start engine. • Clear DTC from PCM memory using WDS or equivalent. • Operate clurch pedal during drive vehicle **below 30 km/h {19 mph} 8 times** altemetely. • Is same DTC present?	Yes	Replace PCM, then go to next step. (See F–43 PCM REMOVAL/INSTALLATION.)
		No	Go to next step.
15	**VERIFY AFTER REPAIR PROCEDURE** • Perform “After Repair Procedure”. (See F–66 AFTER REPAIR PROCEDURE.) • Is there any DTC present?	Yes	Go to applicable DTC troubleshooting. (See F–67 DTC TABLE.)
		No	Troubleshooting completed.

DTC P0850

A6E397001089W03

DTC P0850	Neutral switch circuit malfunction
DETECTION CONDITION	• PCM monitors changes in input voltage from neutral switch. If PCM does not detect PCM terminal 1W voltage changes while running vehicle with vehicle speed **above 30 km/h {19 mph}** and clutch pedal turns press and depress **10 times** repeatedly, PCM determines that neutral switch circuit has malfunction **Diagnostic support note** • This is a continuous monitor (CCM). • MIL illuminates if PCM detects the above malfunction condition in two consecutive drive cycles or in one drive cycle while the DTC for the same malfunction has been stored in the PCM. • PENDING CODE is available if PCM detects the above malfunction condition during first drive cycle. • FREEZE FRAME DATA is available. • DTC is stored in PCM memory.
POSSIBLE CAUSE	• Neutral switch malfunction • Poor connection of neutral switch connector or PCM connector. • Short to ground between neutral switch terminal B and PCM connector terminal 1W. • Open harness between neutral switch terminal B and PCM connector terminal 1W. • Open harness between ground and brake switch terminal A. • PCM malfunction

DTC P0850	Neutral switch circuit malfunction

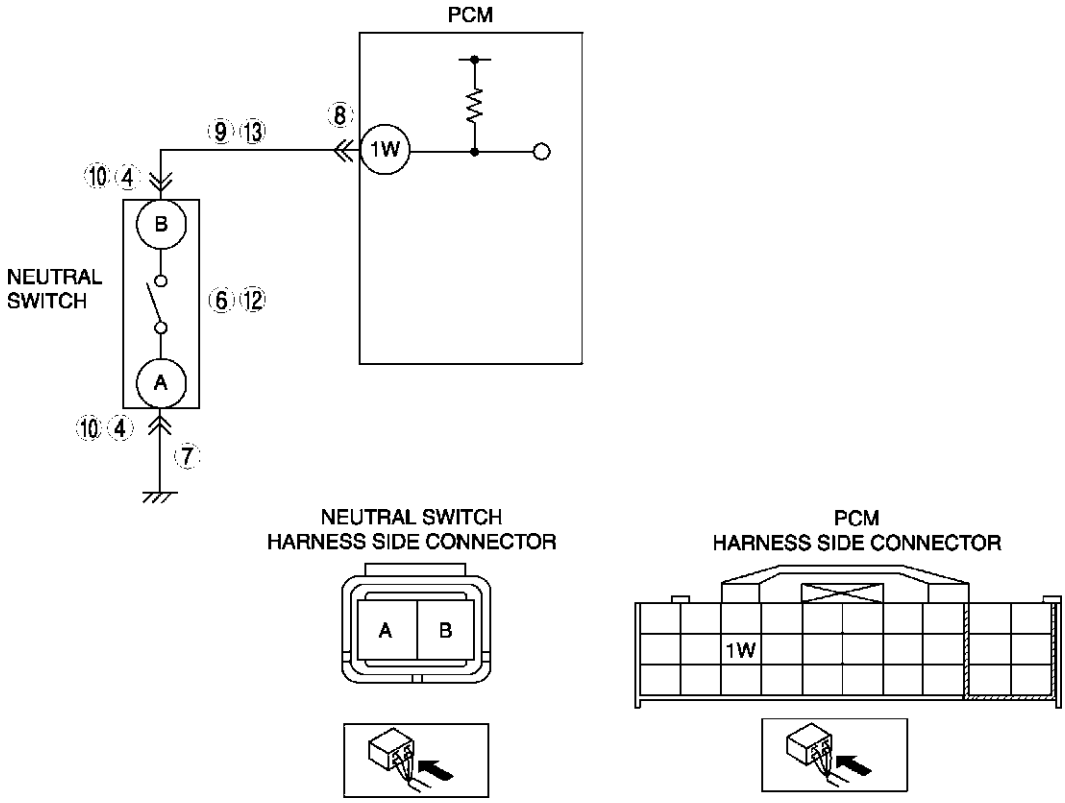

Diagnostic procedure

STEP	INSPECTION		ACTION
1	**VERIFY FREEZE FRAME DATA HAS BEEN RECORDED** • Has FREEZE FRAME DATA been recorded?	Yes	Go to next step.
		No	Record FREEZE FRAME DATA on repair order, then go to next step.
2	**VERIFY RELATED SERVICE INFORMATION AVAILABILITY** • Check for related Service Information availability. • Is any related Service Information available?	Yes	Perform repair or diagnosis according to available Service Information. • If vehicle is not repaired, go to next step.
		No	Go to next step.
3	**CLASSIFY HIGH INPUT OR LOW INPUT** • Connect WDS or equivalent to DLC-2. • Access CPP/PNP PID. • Verify CPP/PNP PID when gear is neutral position. • Is CPP/PNP PID always OFF?.	Yes	Go to Next step.
		No	Go to Step 10.
4	**INSPECT NEUTRAL SWITCH CONNECTOR FOR POOR CONNECTION** • Turn ignition switch to OFF. • Disconnect neutral switch connector. • Inspect for poor connection (damaged/pulled-out terminals, corrosion, etc.). • Is there malfunction?	Yes	Repair or replace terminal, then go to Step 14.
		No	Go to next step.
5	**CLASSIFY NEUTRAL SWITCH OR CIRCUIT** • Connect WDS or equivalent to DLC-2. • Access CPP/PNP PID. • Connect a jumper wire between neutral switch terminal A and B. • Is CPP/PNP PID on?	Yes	Go to next step.
		No	Go to Step 7.
6	**INSPECT NEUTRAL SWITCH** • Perform neutral switch inspection. (See F–59 NEUTRAL SWITCH INSPECTION.) • Is neutral switch okay?	Yes	Go to Step 14.
		No	Replace neutral switch, then go to Step 14.

STEP	INSPECTION		ACTION
7	**INSPECT NEUTRAL SWITCH GROUND CIRCUIT FOR OPEN CIRCUIT** • Inspect continuity between neutral switch terminal A and ground. • Is there any continuity?	Yes	Go to next step.
		No	Repair or replace neutral switch power circuit for open, then Go to Step 14.
8	**INSPECT PCM CONNECTOR FOR POOR CONNECTION** • Turn ignition switch to OFF. • Disconnect PCM connector. • Inspect for poor connection (damaged/pulled-out terminals, corrosion, etc.). • Is there malfunction?	Yes	Repair or replace terminal, then go to Step 14.
		No	Go to next step.
9	**INSPECT NEUTRAL SWITCH SIGNAL CIRCUIT FOR OPEN CIRCUIT** • Inspect continuity between neutral switch terminal B and PCM terminal 1W. • Is there any continuity?	Yes	Repair or replace harness for open, then go to Step 14.
		No	Go to Step 14.
10	**INSPECT NEUTRAL SWITCH CONNECTOR FOR POOR CONNECTION** • Turn ignition switch to OFF. • Disconnect neutral switch connector. • Inspect for poor connection (damaged/pulled-out terminals, corrosion, etc.). • Is there malfunction?	Yes	Repair or replace terminal, then go to Step 14.
		No	Go to next step.
11	**CLASSIFY NEUTRAL SWITCH OR CIRCUIT** • Connect WDS or equivalent to DLC-2. • Access CPP/PNP PID. • Verify that CPP/PNP PID changes from ON to OFF when neutral switch connector disconnected. • Does CPP/PNP PID change from ON to OFF?	Yes	Go to next step.
		No	Go to Step 13.
12	**INSPECT NEUTRAL SWITCH** • Perform neutral switch inspection. (See F–59 NEUTRAL SWITCH INSPECTION.) • Is neutral switch okay?	Yes	Go to Step 14.
		No	Replace neutral switch, then go to Step 14.
13	**INSPECT NEUTRAL SWITCH SIGNAL CIRCUIT FOR SHORT TO GROUND** • Inspect continuity between neutral switch terminal B and ground. • Is there any continuity?	Yes	Repair or replace harness for short to ground, then go to Step 14.
		No	Go to Next step.
14	**VERIFY TROUBLESHOOTING OF DTC P0850 COMPLETED** • Make sure to reconnect all disconnected connectors. • Start engine. • Clear DTC from PCM memory using WDS or equivalent. • Drive vehicle **above 30 km/h {19 mph}** and stop vehicle. • Depress and release clutch pedal **more than 10 times** during drive cycle. • Is same DTC present?	Yes	Replace PCM, then go to next step. (See F–43 PCM REMOVAL/INSTALLATION.)
		No	Go to next step.
15	**VERIFY AFTER REPAIR PROCEDURE** • Perform “After Repair Procedure”. (See F–66 AFTER REPAIR PROCEDURE.) • Is there any DTC present?	Yes	Go to applicable DTC troubleshooting. (See F–67 DTC TABLE.)
		No	Troubleshooting completed.

DTC P1410

A6E397001083W01

DTC P1410	Variable air duct (VAD) control system circuit malfunction
DETECTION CONDITION	• PCM monitors VAD solenoid control signal at PCM terminal 4C. If PCM detects VAD solenoid control signal does not change when VAD solenoid valve is switched to ON or OFF, PCM determines that VAD solenoid control circuit has malfunction.

DTC P1410	Variable air duct (VAD) control system circuit malfunction
POSSIBLE CAUSE	• VAD solenoid valve malfunction. • Connector or terminal malfunction. • Short to ground in wiring between VAD solenoid valve terminal B and PCM terminal 4C • Open circuit in wiring between main relay and VAD solenoid valve terminal A • Open circuit in wiring between VAD solenoid valve terminal B and PCM terminal 4C • Short to power in wiring between VAD solenoid valve terminal B and PCM terminal 4C • PCM malfunction

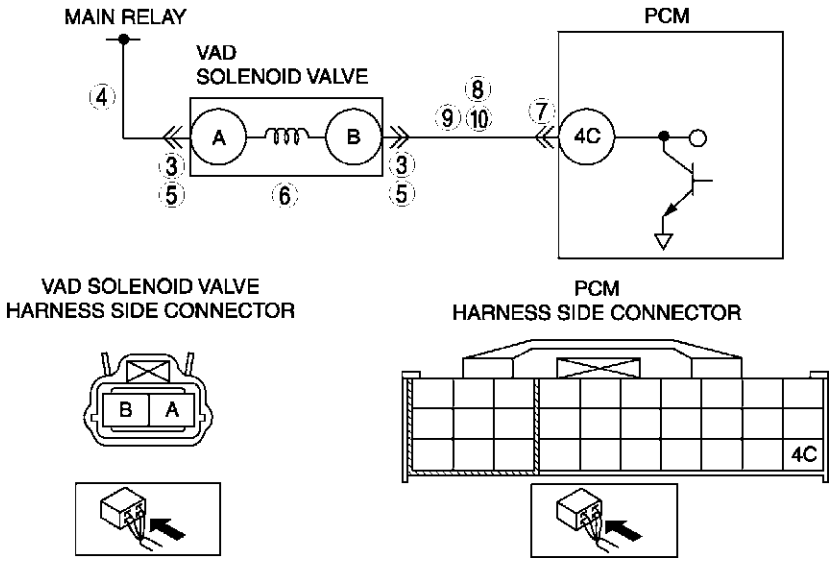

F

Diagnostic procedure

STEP	INSPECTION		ACTION
1	**PERFORM DTC CONFIRMATION PROCEDURE** • Perform DTC CONFIRMATION PROCEDURE. (See F–66 DTC CONFIRMATION PROCEDURE.) • Is same DTC present?	Yes	Go to next step.
		No	Intermittent concern exists. Go to INTERMITTENT CONCERN TROUBLESHOOTING procedure. (See F–227 INTERMITTENT CONCERN TROUBLESHOOTING.)
2	**CLASSIFY POWER CIRCUIT OR CONTROL CIRCUIT MALFUNCTION** • Is the same DTC and P0102, P0103, P0403, P0661, P0662, P2009 or P2010 present?	Yes	Malfunction at power circuit, then go to next step
		No	Malfunction at VAD solenoid valve or control circuit, then go to Step 5
3	**INSPECT POOR CONNECTION OF VAD SOLENOID VALVE CONNECTOR** • Disconnect VAD solenoid valve connector. • Inspect for poor connection (damaged, pulled-out terminals, corrosion, etc.). • Are there any malfunctions?	Yes	Repair terminals, then go to Step 11.
		No	Go to next step.
4	**INSPECT VAD SOLENOID VALVE POWER CIRCUIT FOR OPEN CIRCUIT** • Turn ignition switch to ON (Engine OFF). • Measure voltage between VAD solenoid valve connector terminal A and body ground. • Is voltage **B+**?	Yes	Inspect VAD solenoid valve. • If there is a malfunction, replace VAD solenoid valve, then go to Step 11 • If there is no malfunction, go to Step 12
		No	Repair or replace VAD solenoid valve power circuit for open, then Go to Step 11.
5	**INSPECT POOR CONNECTION OF VAD SOLENOID VALVE CONNECTOR** • Disconnect connector. • Inspect for poor connection (damaged, pulled-out terminals, corrosion, etc.). • Are there any malfunctions?	Yes	Repair or replace terminals, then go to Step 11.
		No	Go to next step.
6	**INSPECT VAD SOLENOID VALVE** • Perform VAD solenoid valve inspection. (See F–12 VARIABLE AIR DUCT (VAD) SHUTTER VALVE INSPECTION (L3).) • Is clutch switch okay?	Yes	Go to Step 11.
		No	Replace VAD solenoid valve, then go to Step 11.

STEP	INSPECTION		ACTION
7	**INSPECT POOR CONNECTION OF PCM CONNECTOR** • Disconnect PCM connector. • Inspect for poor connection (damaged, pulled-out terminals, corrosion, etc.). • Are there any malfunctions?	Yes	Repair terminals, then go to Step 11.
		No	Go to next step.
8	**INSPECT CONTROL CIRCUIT FOR SHORT TO GROUND** • Disconnect battery cables. • Inspect continuity between VAD solenoid valve terminal B and body ground. • Is there continuity?	Yes	Repair or replace harness for short to ground, then go to Step 11.
		No	Go to next Step.
9	**INSPECT VAD SOLENOID VALVE CONTROL CIRCUIT FOR SHORT TO POWER** • Measure voltage between brake switch connector terminal B and body ground. • Is voltage **B+**?	Yes	Repair or replace harness for short to power, then go to Step 11.
		No	Go to next step.
10	**INSPECT CONTROL CIRCUIT FOR OPEN CIRCUIT** • Inspect continuity between VAD solenoid valve terminal B and PCM terminal 4C. • Is there any continuity?	Yes	Go to next step.
		No	Repair or replace harness for open, then go to next step.
11	**VERIFY TROUBLESHOOTING OF DTC P1410 COMPLETED** • Make sure to reconnect all disconnected connectors. • Clear DTC from PCM memory using WDS or equivalent. • Perform KOEO/KOER self-test. (See F–66 KOEO/KOER SELF-TEST.) • Is same DTC present?	Yes	Replace PCM, then go to next step. (See F–43 PCM REMOVAL/INSTALLATION.)
		No	Go to next step.
12	**VERIFY AFTER REPAIR PROCEDURE** • Perform “After Repair Procedure”. (See F–66 AFTER REPAIR PROCEDURE.) • Is there any DTC present?	Yes	Go to applicable DTC troubleshooting. (See F–67 DTC TABLE.)
		No	Troubleshooting completed.

DTC P1562

A6E397001083W02

DTC P1562	PCM +BB (back-up battery) voltage low
DETECTION CONDITION	• PCM monitors voltage of back-up battery positive at PCM terminal 2Z. If PCM detects battery positive terminal voltage **below 2.5V** for **2 s**, PCM determines that backup voltage circuit has malfunction. **Diagnostic support note** • This is a continuous monitor (CCM). • MIL illuminates if PCM detects the above malfunction condition during first drive cycle. • PENDING CODE is available if PCM detects the above malfunction condition. • FREEZE FRAME DATA is available. • DTC is stored in the PCM memory.
POSSIBLE CAUSE	• Melt down EEC fuse. • Open circuit in wiring between EEC fuse and PCM terminal 2Z • Short to ground between EEC fuse and PCM terminal 2Z • Poor connection of PCM connector. • PCM malfunction

DTC P1562	PCM +BB (back-up battery) voltage low

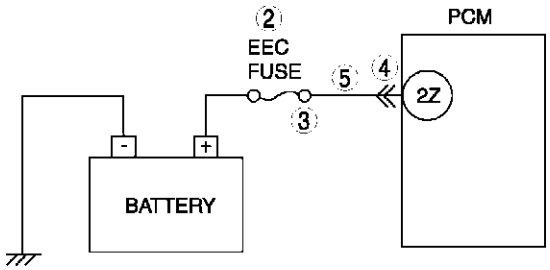

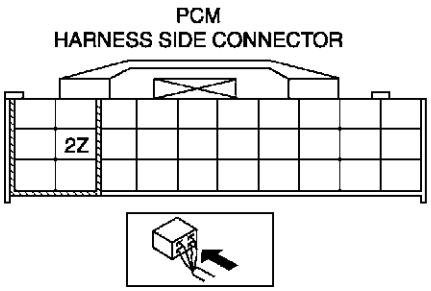

F

Diagnostic procedure

STEP	INSPECTION		ACTION
1	**PERFORM DTC CONFIRMATION PROCEDURE** • Perform DTC CONFIRMATION PROCEDURE. (See F–66 DTC CONFIRMATION PROCEDURE.) • Is same DTC present?	Yes	Go to next step.
		No	Intermittent concern exists. Go to INTERMITTENT CONCERN TROUBLESHOOTING procedure. (See F–227 INTERMITTENT CONCERN TROUBLESHOOTING.)
2	**INSPECT EEC FUSE** • Turn ignition key to OFF. • Inspect EEC fuse for failure and proper. • Is it okay?	Yes	Go to step 5.
		No	• If EEC fuse has been melt down, then go to next step. • If EEC fuse is not installed correctly, install it correctly then go to Step 6.
3	**INSPECT MONITOR CIRCUIT FOR SHORT TO GROUND** • Disconnect battery cables. • Inspect continuity between EEC fuse terminal and body ground. • Is there continuity?	Yes	Repair or replace harness for short to ground and install new fuse, then go to Step 6.
		No	Go to step 6.
4	**INSPECT POOR CONNECTION OF PCM CONNECTOR** • Disconnect PCM connector. • Inspect for poor connection (damaged, pulled-out terminals, corrosion, etc.). • Are there any malfunctions?	Yes	Repair terminals, then go to Step 6.
		No	Go to next step.
5	**INSPECT MONITOR CIRCUIT FOR OPEN CIRCUIT** • Disconnect battery cables. • Inspect continuity between EEC fuse terminal and PCM terminal 2Z (harness side). • Is there any continuity?	Yes	Go to next step.
		No	Repair or replace harness for open, then go to next step.
6	**VERIFY TROUBLESHOOTING OF DTC P1562 COMPLETED** • Make sure to reconnect all disconnected connectors. • Clear DTC from PCM memory using WDS or equivalent. • Perform KOEO/KOER self-test. (See F–66 KOEO/KOER SELF-TEST.) • Is same DTC present?	Yes	Replace PCM, then go to next step. (See F–43 PCM REMOVAL/INSTALLATION.)
		No	Go to next step.

STEP	INSPECTION		ACTION
7	**VERIFY AFTER REPAIR PROCEDURE** • Perform “After Repair Procedure”. (See F–66 AFTER REPAIR PROCEDURE.) • Is there any DTC present?	Yes	Go to applicable DTC troubleshooting. (See F–67 DTC TABLE.)
		No	Troubleshooting completed.

DTC P2006

A6E397001083W03

DTC P2006	Variable tumble control system (VTCS) shutter valve stuck closed
DETECTION CONDITION	• PCM monitors mass air amount. If actual air flow amount is below estimated air flow amount when the following monitoring conditions are met. PCM determines that VTCS shutter valve has been stuck closed. **MONITORING CONDITIONS** — Engine coolant temperature is **above 63 °C {145 °F}**. — Engine speed is **below 3,750 rpm**. — Throttle valve opening angle is above threshold*. *: Maximum calculated load valve varies depending on engine speed. **Diagnostic support note** • This is a continuous monitor (CCM). • MIL illuminates if PCM detects the above malfunction condition in two consecutive drive cycles or in one drive cycle while the DTC for the same malfunction has been stored in the PCM. • PENDING CODE is available if PCM detects the above malfunction condition during first drive cycle. • FREEZE FRAME DATA is available. • DTC is stored in PCM memory.
POSSIBLE CAUSE	• ECT sensor malfunction • TP sensor malfunction • CKP sensor malfunction • Variable tumble control solenoid valve malfunction • VTCS shutter valve malfunction (stuck closed) • VTCS shutter valve actuator malfunction (stuck closed). • Short to ground circuit between variable tumble control solenoid valve terminal B and PCM terminal 4T • PCM malfunction

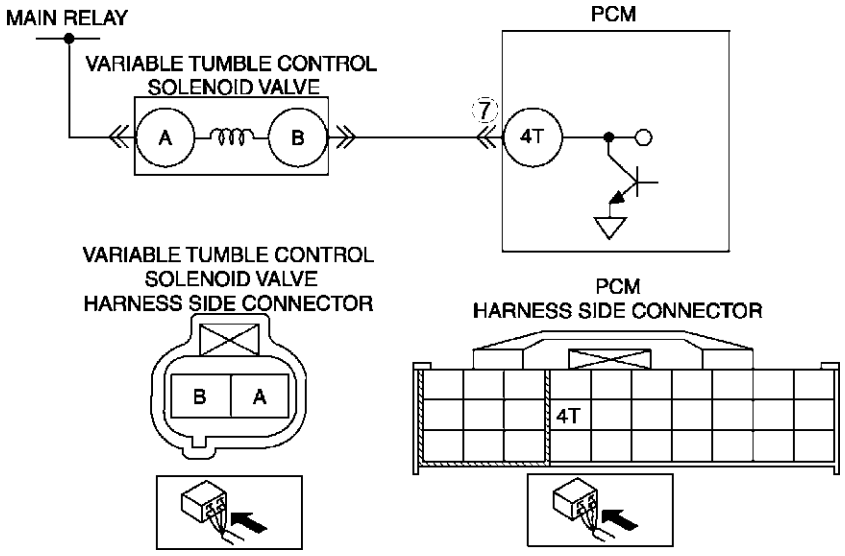

Diagnostic procedure

STEP	INSPECTION		ACTION
1	**VERIFY FREEZE FRAME DATA HAS BEEN RECORDED** • Has FREEZE FRAME DATA been recorded?	Yes	Go to next step.
		No	Record FREEZE FRAME DATA on repair order, then go to next step.
2	**VERIFY RELATED SERVICE INFORMATION AVAILABILITY** • Check for related Service Information availability. • Is any related Service Information available?	Yes	Perform repair or diagnosis according to available Service Information. • If vehicle is not repaired, go to next step.
		No	Go to next step.

STEP	INSPECTION		ACTION
3	**CLASSIFY INTERMITTENT CONCERN OR CONTINUOUS CONCERN** • Clear DTC from PCM memory using WDS or equipment. • Drive vehicle under following conditions: — Engine coolant temperature is **above 63 °C {145 °F}**. — Engine speed: **below 3,750 rpm** — Throttle opening angle is below as followings • Engine speed **below 1,500 rpm**: **above 35 %** • Engine speed **between 1,500–2,500 rpm**: **between 25–35%** • Engine speed **above 2,500**: **below 25 %** • Is pending code the same as DTC present?	Yes	Go to next step.
		No	Intermittent concern exists. Go to INTERMITTENT CONCERN TROUBLESHOOTING procedure. (See F–227 INTERMITTENT CONCERN TROUBLESHOOTING.)
4	**VERIFY STORED OTHER DTCS** • Verify stored DTCs using WDS or equipment. • Is other DTC present except P0117, P0118, P0121, P0122, P0123 and/or P0335?	Yes	Go to appropriate DTC troubleshooting procedures.
		No	Go to next step.
5	**INSPECT VTCS SHUTTER VALVE ACTUATOR** • Carry out “VTCS operation inspection”. (See F–231 Variable Tumble Control System (VTCS) Operation Inspection.) • Is VTCS shutter valve actuator okay?	Yes	Go to next step.
		No	Replace VTCS shutter valve actuator, then go to Step 8.
6	**INSPECT VARIABLE TUMBLE CONTROL SOLENOID VALVE** • Carry out “Variable tumble control solenoid valve airflow inspection”. (See F–15 VARIABLE TUMBLE CONTROL SOLENOID VALVE INSPECTION.) • Is variable tumble control solenoid valve okay?	Yes	Go to next step.
		No	Replace variable tumble control solenoid valve, then go to Step 8.
7	**INSPECT PCM FOR POOR CONNECTION** • Inspect for poor connection at PCM terminal 4T (damaged/pulled-out terminals, corrosion, etc.). • Is there malfunction?	Yes	Repair terminal, then go to next step.
		No	Go to next step.
8	**VERIFY TROUBLESHOOTING OF DTC P2006 COMPLETED** • Make sure to reconnect all disconnected connectors. • Start engine. • Clear DTC from PCM memory using WDS or equipment. • Start engine. • Drive vehicle under following conditions: — Engine coolant temperature is **above 63 °C {145 °F}**. — Engine speed: **below 3,750 rpm** — Throttle opening angle is below as followings • Engine speed **below 1,500 rpm**: **above 35 %** • Engine speed **between 1,500–2,500 rpm**: **between 25–35%** • Engine speed **above 2,500**: **below 25 %** • Is pending code the same as DTC present?	Yes	Replace PCM, then go to next step. (See F–43 PCM REMOVAL/INSTALLATION.)
		No	Go to next step.
9	**VERIFY AFTER REPAIR PROCEDURE** • Perform “After Repair Procedure”. (See F–66 AFTER REPAIR PROCEDURE.) • Is there any DTC present?	Yes	Go to applicable DTC troubleshooting. (See F–67 DTC TABLE.)
		No	Troubleshooting completed.

F

DTC P2009

A6E397001083W04

DTC P2009	Variable tumble control solenoid valve circuit low input
DETECTION CONDITION	• PCM monitors variable tumble control solenoid valve control signal at PCM terminal 4T. If PCM turns variable tumble control solenoid valve off but voltage at PCM terminal 4T still remains low, PCM determines that VTCS solenoid valve circuit has malfunction. **Diagnostic support note** • This is a continuous monitor (CCM). • MIL illuminates if PCM detects the above malfunction condition in two consecutive drive cycles or in one drive cycle while the DTC for the same malfunction has been stored in the PCM. • PENDING CODE is available if PCM detects the above malfunction condition during first drive cycle. • FREEZE FRAME DATA is available. • DTC is stored in PCM memory.
POSSIBLE CAUSE	• Poor connection of connectors at PCM and/or variable tumble control solenoid valve • Short to ground in wiring between variable tumble control solenoid valve terminal B and PCM terminal 4T • Open circuit in wiring between main relay and variable tumble control solenoid valve terminal A • Open circuit in wiring between variable tumble control solenoid valve terminal B and PCM terminal 4T • Variable tumble control solenoid valve malfunction • PCM malfunction

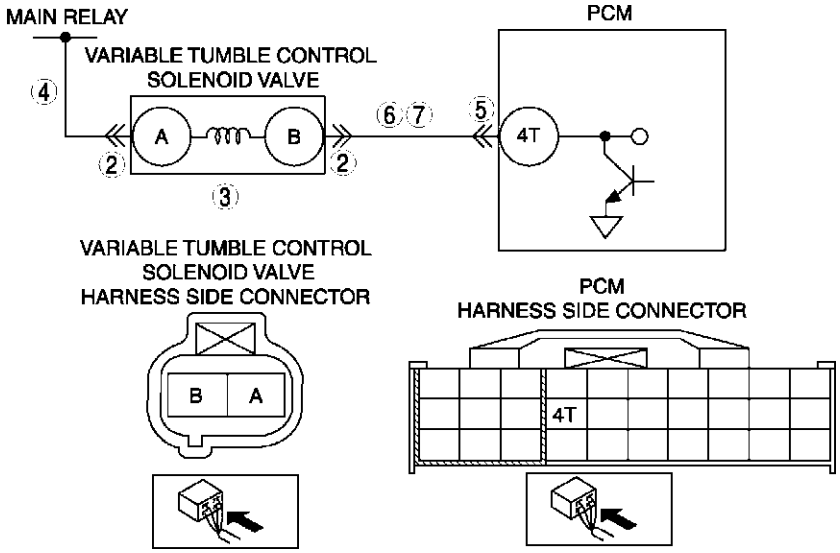

Diagnostic procedure

STEP	INSPECTION		ACTION
1	**PERFORM DTC CONFIRMATION PROCEDURE** • Perform DTC CONFIRMATION PROCEDURE. (See F–66 DTC CONFIRMATION PROCEDURE.) • Is same DTC present?	Yes	Go to next step.
		No	Intermittent concern exists. Go to INTERMITTENT CONCERN TROUBLESHOOTING procedure. (See F–227 INTERMITTENT CONCERN TROUBLESHOOTING.)
2	**INSPECT VTCS SOLENOID VALVE CONNECTOR FOR POOR CONNECTION** • Turn ignition key to OFF. • Inspect for poor connection (damaged/pulled-out pins, corrosion, etc.). • Is there malfunction?	Yes	Repair or replace terminal, then go to Step 8.
		No	Go to next step.
3	**INSPECT VARIABLE TUMBLE CONTROL SOLENOID VALVE** • Perform variable tumble control solenoid valve inspection. (See F–15 VARIABLE TUMBLE CONTROL SOLENOID VALVE INSPECTION.) • Is variable tumble control solenoid valve okay?	Yes	Go to next step.
		No	Replace variable tumble control solenoid valve, then go to Step 8.

STEP	INSPECTION		ACTION
4	**INSPECT VARIABLE TUMBLE CONTROL SOLENOID VALVE POWER SUPPLY CIRCUIT FOR OPEN CIRCUIT** • Disconnect variable tumble control solenoid valve connector. • Turn ignition key to ON (Engine OFF). • Measure voltage between variable tumble control solenoid valve terminal A (harness-side) and body ground. • Is voltage **B+**?	Yes	Go to next step.
		No	Repair or replace harness for open, then go to Step 8.
5	**INSPECT PCM CONNECTOR FOR POOR CONNECTION** • Turn ignition key to OFF. • Disconnect PCM connector. • Inspect for poor connection at PCM terminal 4T. (damaged/pulled-out pins, corrosion, etc.). • Is there malfunction?	Yes	Repair terminal, then go to Step 8.
		No	Go to next step.
6	**INSPECT VARIABLE TUMBLE CONTROL SOLENOID VALVE CONTROL CIRCUIT FOR SHORT TO GROUND** • Inspect continuity between variable tumble control solenoid valve terminal B (harness-side) and body ground. • Is there continuity?	Yes	Repair or replace harness for short to ground, then go to Step 8.
		No	Go to next step.
7	**INSPECT VARIABLE TUMBLE CONTROL SOLENOID VALVE CONTROL CIRCUIT FOR OPEN CIRCUIT** • Connect variable tumble control solenoid valve connector. • Turn ignition key to ON (Engine OFF). • Measure voltage between PCM terminal 4T (harness side) and body ground. • Is voltage **B+**?	Yes	Go to next step.
		No	Repair or replace harness for open or short to ground circuit, then go to next step.
8	**VERIFY TROUBLESHOOTING OF DTC P2009 COMPLETED** • Make sure to reconnect all disconnected connectors. • Clear DTC from PCM memory using WDS or equipment. • Perform KOEO/KOER self-test. (See F–66 KOEO/KOER SELF-TEST.) • Is same DTC present?	Yes	Replace PCM, then go to next step. (See F–43 PCM REMOVAL/INSTALLATION.)
		No	Go to next step.
9	**VERIFY AFTER REPAIR PROCEDURE** • Perform “After Repair Procedure”. (See F–66 AFTER REPAIR PROCEDURE.) • Is there any DTC present?	Yes	Go to applicable DTC troubleshooting. (See F–67 DTC TABLE.)
		No	Troubleshooting completed.

F

DTC P2010

A6E397001083W05

DTC P2010	Variable tumble control solenoid valve circuit high input
DETECTION CONDITION	• PCM monitors variable tumble control solenoid valve control signal at PCM terminal 4T. If PCM turns variable tumble control solenoid valve on but voltage at PCM terminal 4T still remains high, PCM determines that variable tumble control solenoid valve circuit has malfunction. **Diagnostic support note** • This is a continuous monitor (CCM). • MIL illuminates if PCM detects the above malfunction condition in two consecutive drive cycles or in one drive cycle while the DTC for the same malfunction has been stored in the PCM. • PENDING CODE is available if PCM detects the above malfunction condition during first drive cycle. • FREEZE FRAME DATA is available. • DTC is stored in PCM memory.
POSSIBLE CAUSE	• Poor connection of connectors at PCM and/or variable tumble control solenoid valve • Short to power circuit in wiring between variable tumble control solenoid valve terminal B and PCM terminal 4T • Variable tumble control solenoid valve malfunction • PCM malfunction

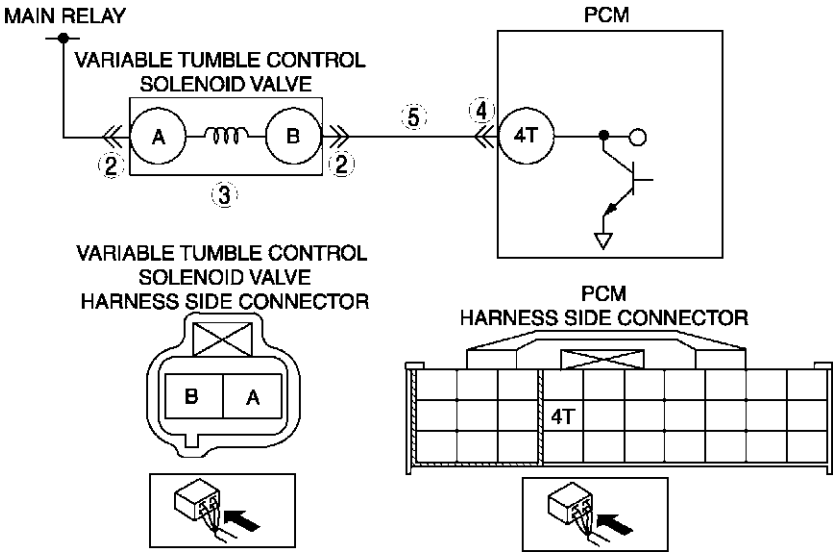

Diagnostic procedure

STEP	INSPECTION		ACTION
1	**PERFORM DTC CONFIRMATION PROCEDURE** • Perform DTC CONFIRMATION PROCEDURE. (See F–66 DTC CONFIRMATION PROCEDURE.) • Is same DTC present?	Yes	Go to next step.
		No	Intermittent concern exists. Go to INTERMITTENT CONCERN TROUBLESHOOTING procedure. (See F–227 INTERMITTENT CONCERN TROUBLESHOOTING.)
2	**INSPECT POOR CONNECTION OF VARIABLE TUMBLE CONTROL SOLENOID VALVE CONNECTOR** • Turn ignition key to OFF. • Inspect for poor connection (damaged/pulled-out pins, corrosion, etc.). • Is there malfunction?	Yes	Repair or replace terminal, then go to Step 6.
		No	Go to next step.
3	**INSPECT VARIABLE TUMBLE CONTROL SOLENOID VALVE** • Perform variable tumble control solenoid valve inspection. (See F–15 VARIABLE TUMBLE CONTROL SOLENOID VALVE INSPECTION.) • Is variable tumble control solenoid valve okay?	Yes	Go to next step.
		No	Replace variable tumble control solenoid valve, then go to Step 6.

STEP	INSPECTION		ACTION
4	**INSPECT PCM CONNECTOR FOR POOR CONNECTION** • Turn ignition key to OFF. • Disconnect PCM connector. • Inspect for poor connection at PCM terminal 4T. (damaged/pulled-out pins, corrosion, etc.). • Is there malfunction?	Yes	Repair terminal, then go to Step 6.
		No	Go to next step.
5	**INSPECT VARIABLE TUMBLE CONTROL SOLENOID VALVE CONTROL CIRCUIT FOR SHORT TO POWER** • Remove variable tumble control solenoid valve. • Turn ignition key to ON (Engine OFF). • Measure voltage between PCM terminal 4T and body ground. • Is voltage **B+**?	Yes	Repair or replace harness for short to power circuit, then go to next step.
		No	Go to next step.
6	**VERIFY TROUBLESHOOTING OF DTC P2010 COMPLETED** • Make sure to reconnect all disconnected connectors. • Clear DTC from PCM memory using WDS or equipment. • Perform KOEO/KOER self-test. (See F–66 KOEO/KOER SELF-TEST.)	Yes	Replace PCM, then go to next step. (See F–43 PCM REMOVAL/INSTALLATION.)
		No	Go to next step.
7	**VERIFY AFTER REPAIR PROCEDURE** • Perform “After Repair Procedure”. (See F–66 AFTER REPAIR PROCEDURE.) • Is there any DTC present?	Yes	Go to applicable DTC troubleshooting. (See F–67 DTC TABLE.)
		No	Troubleshooting completed.

F

DTC P2228

A6E397001083W06

DTC P2228	BARO sensor circuit low input
DETECTION CONDITION	• PCM monitors input voltage from BARO sensor. If input voltage at PCM terminal 1G is **below 0.35 V**, PCM determines that BARO sensor circuit has malfunction. **Diagnostic support note** • This is a continuous monitor (CCM). • MIL illuminates if PCM detects the above malfunction condition during first drive cycle. • PENDING CODE is available if PCM detects the above malfunction condition. • FREEZE FRAME DATA is available. • DTC is stored in PCM memory.
POSSIBLE CAUSE	• BARO sensor malfunction • Connector or terminal malfunction • Short to ground in wiring between BARO sensor terminal A and PCM terminal 1G • Open circuit in wiring between BARO sensor terminal C and PCM terminal 2K • PCM malfunction

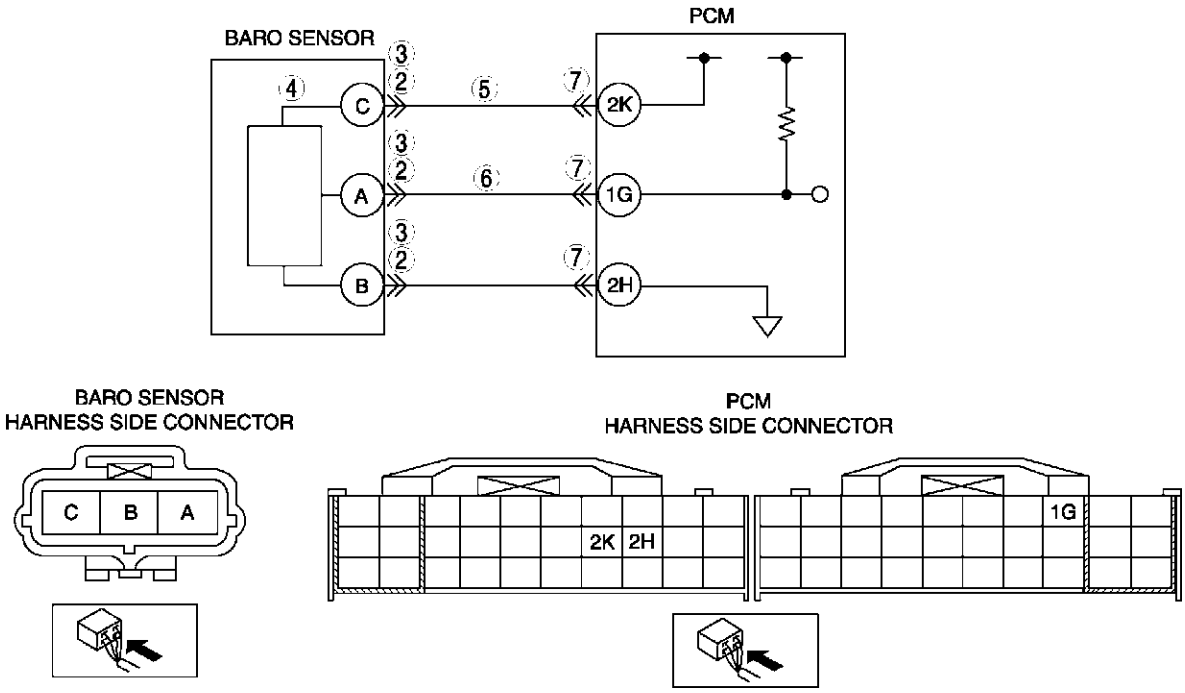

Diagnostic procedure

STEP	INSPECTION		ACTION
1	**PERFORM DTC CONFIRMATION PROCEDURE** • Perform DTC CONFIRMATION PROCEDURE. (See F–66 DTC CONFIRMATION PROCEDURE.) • Is same DTC present?	Yes	Go to next step.
		No	Intermittent concern exists. Go to INTERMITTENT CONCERN TROUBLESHOOTING procedure. (See F–227 INTERMITTENT CONCERN TROUBLESHOOTING.)
2	**INSPECT CONNECTION OF BARO SENSOR CONNECTOR** • Turn ignition key to OFF. • Verify that BARO sensor connector is connected securely. • Is connection okay?	Yes	Go to next step.
		No	Reconnect the connector, then go to Step 8.
3	**INSPECT BARO SENSOR CONNECTOR FOR POOR CONNECTION** • Disconnect the BARO sensor connector. • Inspect for poor connection (damaged/pulled-out pins, corrosion, etc.). • Is there malfunction?	Yes	Repair or replace suspected terminal, then go to Step 8.
		No	Go to next step.

STEP	INSPECTION		ACTION
4	**INSPECT BARO SENSOR MALFUNCTiON** • Perform BARO sensor inspection. (See F–60 BAROMETRIC PRESSURE (BARO) SENSOR INSPECTION.) • Is BARO sensor okay?	Yes	Go to next step.
		No	Replace BARO sensor, then go to Step 8.
5	**INSPECT POWER SUPPLY CIRCUIT VOLTAGE AT BARO SENSOR CONNECTOR** **Note** • If DTCs P0107 and P0122 are also retrieved with P2228, go to REFERENCE VOLTAGE troubleshooting procedure. • Measure voltage between BARO sensor terminal C (harness-side) and body ground. • Is voltage **within 4.5—5.5 V?**	Yes	Go to next step.
		No	Inspect for open circuit between PCM terminal 2K (harness-side) and BARO sensor terminal C (harness-side). Repair or replace suspected harness, then go to Step 8.
6	**INSPECT BARO SENSOR SIGNAL CIRCUIT FOR SHORT TO GROUND** • Turn ignition key to OFF. • Disconnect PCM connector. • Inspect for continuity between BARO sensor terminal B (harness-side) and body ground. • Is there continuity?	Yes	Repair or replace suspected harness, then go to Step 8.
		No	Go to next step.
7	**INSPECT PCM CONNECTOR FOR POOR CONNECTION** • Disconnect PCM connector. • Inspect for poor connection at terminal 2H (damaged/pulled-out pins, corrosion, etc.). • Is there malfunction?	Yes	Repair terminal, then go to Step 8.
		No	Go to next step.
8	**VERIFY TROUBLESHOOTING OF DTC P2228 COMPLETED** • Make sure to reconnect all disconnected connectors. • Turn ignition key to ON (Engine OFF). • Clear DTC from memory using WDS or equivalent. • Perform KOEO/KOER self-test. (See F–66 KOEO/KOER SELF-TEST.) • Is same DTC present?	Yes	Replace PCM, then go to next step. (See F–43 PCM REMOVAL/INSTALLATION.)
		No	No concern is detected. Go to next step.
9	**VERIFY AFTER REPAIR PROCEDURE** • Perform “After Repair Procedure”. (See F–66 AFTER REPAIR PROCEDURE.) • Is there any DTC present?	Yes	Go to applicable DTC troubleshooting. (See F–67 DTC TABLE.)
		No	Troubleshooting completed.

F

DTC P2229

A6E397001083W07

DTC P2229	BARO sensor circuit high input
DETECTION CONDITION	• PCM monitors input voltage from BARO sensor. If input voltage at PCM terminal 1G is **above 4.92 V**, PCM determines that BARO sensor circuit has malfunction. **Diagnostic support note** • This is a continuous monitor (CCM). • MIL illuminates if PCM detects the above malfunction condition during first drive cycle. • PENDING CODE is available if PCM detects the above malfunction condition. • FREEZE FRAME DATA is available. • DTC is stored in PCM memory.
POSSIBLE CAUSE	• BARO sensor malfunction • Connector or terminal malfunction • Open circuit in wiring between BARO sensor terminal A and PCM terminal 1G • Open circuit in wiring between BARO sensor terminal B and PCM terminal 2H • Short to power circuit in wiring between BARO sensor terminal A and PCM terminal 1G • PCM malfunction

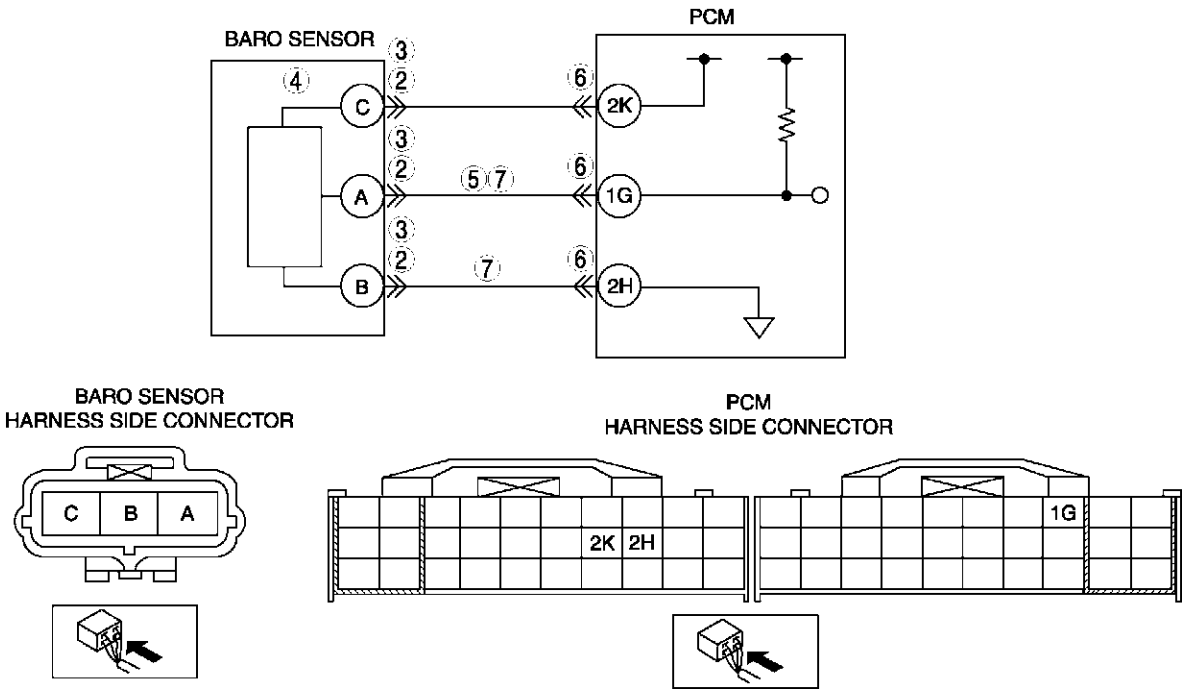

Diagnostic procedure

STEP	INSPECTION		ACTION
1	**PERFORM DTC CONFIRMATION PROCEDURE** • Perform DTC CONFIRMATION PROCEDURE. (See F–66 DTC CONFIRMATION PROCEDURE.) • Is same DTC present?	Yes	Go to next step.
		No	Intermittent concern exists. Go to INTERMITTENT CONCERN TROUBLESHOOTING procedure. (See F–227 INTERMITTENT CONCERN TROUBLESHOOTING.)
2	**INSPECT CONNECTION OF BARO SENSOR CONNECTOR** • Turn ignition key to OFF. • Verify that BARO sensor connector is connected securely. • Is connection okay?	Yes	Go to next step.
		No	Reconnect the connector, then go to Step 8.
3	**INSPECT BARO SENSOR CONNECTOR FOR POOR CONNECTION** • Disconnect the BARO sensor connector. • Inspect for poor connection (damaged/pulled-out pins, corrosion, etc.). • Is there malfunction?	Yes	Repair or replace suspected terminal, then go to Step 8.
		No	Go to next step.

STEP	INSPECTION		ACTION
4	**INSPECT BARO SENSOR MALFUNCTiON** • Perform BARO sensor inspection. (See F–60 BAROMETRIC PRESSURE (BARO) SENSOR INSPECTION.) • Is BARO sensor okay?	Yes	Go to next step.
		No	Replace BARO sensor, then go to Step 8.
5	**VERIFY BARO SENSOR SIGNAL CIRCUIT FOR SHORT TO REFERENCE VOLTAGE CIRCUIT** • Measure voltage between BARO sensor terminal A and body ground. • Is voltage **above 4.92 V?**	Yes	Repair or replace short to power harness, then go to Step 8.
		No	Go to next step.
6	**INSPECT PCM CONNECTOR FOR POOR CONNECTION** • Disconnect PCM connector. • Inspect for poor connection at terminal 2H (damaged/pulled-out pins, corrosion, etc.). • Is there malfunction?	Yes	Repair terminal, then go to Step 8.
		No	Go to next step.
7	**VERIFY BARO SENSOR GROUND CIRCUIT FOR OPEN CIRCUIT** • Inspect for continuity following terminals: — Between BARO sensor terminal A and PCM terminal 1G — Between BARO sensor terminal B and PCM terminal 2H • Is there continuity?	Yes	Go to next step.
		No	Repair or replace open harness, then go to Step 8.
8	**VERIFY TROUBLESHOOTING OF DTC P2229 COMPLETED** • Make sure to reconnect all disconnected connectors. • Turn ignition key to ON (Engine OFF). • Clear DTC from memory using WDS or equivalent. • Perform KOEO/KOER self-test. (See F–66 KOEO/KOER SELF-TEST.) • Is same DTC present?	Yes	Replace PCM, then go to next step. (See F–43 PCM REMOVAL/INSTALLATION.)
		No	No concern is detected. Go to next step.
9	**VERIFY AFTER REPAIR PROCEDURE** • Perform “After Repair Procedure”. (See F–66 AFTER REPAIR PROCEDURE.) • Is there any DTC present?	Yes	Go to applicable DTC troubleshooting. (See F–67 DTC TABLE.)
		No	Troubleshooting completed.

F

DTC P2502

A6E397001083W08

DTC P2502	Generator terminal B circuit open
DETECTION CONDITION	• PCM judges generator output voltage is **above 17 V** or battery voltage is **below 11 V** during engine running.
POSSIBLE CAUSE	• Open circuit between generator terminal B and battery positive terminal • Battery malfunction • Generator malfunction • PCM is poorly connected. • PCM, generator and/or battery are poorly connected.

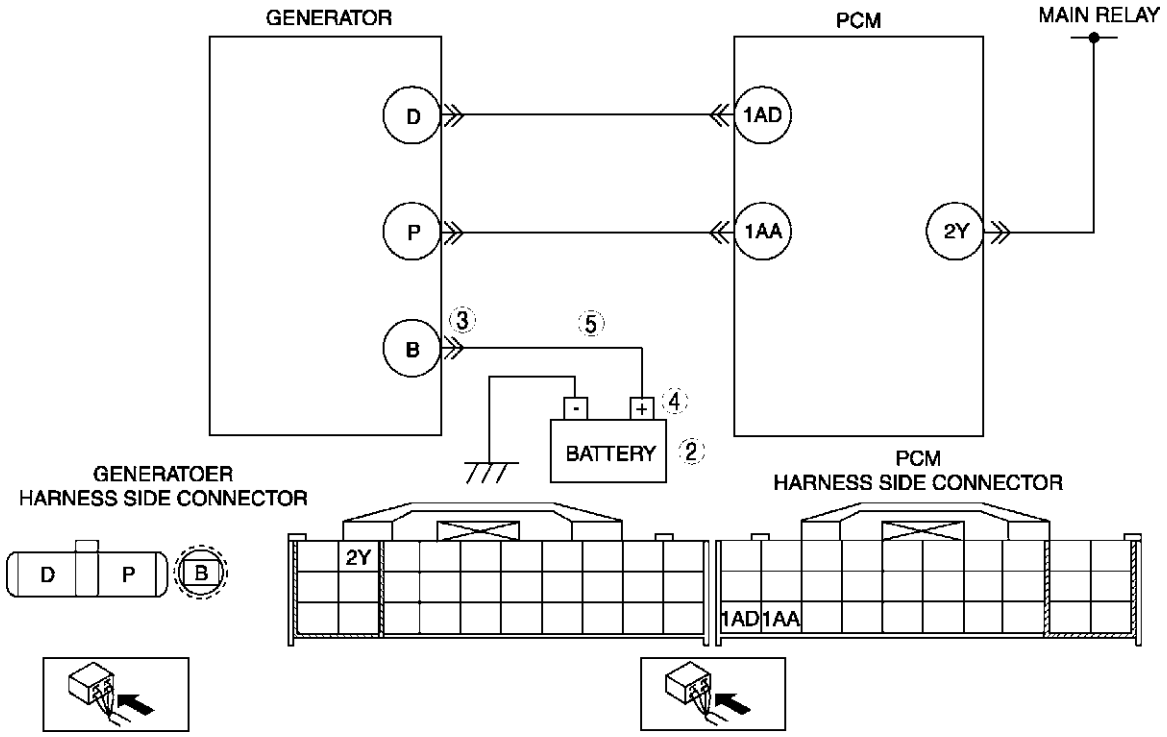

Diagnostic procedure

STEP	INSPECTION		ACTION
1	**PERFORM DTC CONFIRMATION PROCEDURE** • Perform DTC CONFIRMATION PROCEDURE. (See F–66 DTC CONFIRMATION PROCEDURE.) • Is same DTC present?	Yes	Go to next step.
		No	Intermittent concern exists. Go to INTERMITTENT CONCERN TROUBLESHOOTING procedure. (See F–227 INTERMITTENT CONCERN TROUBLESHOOTING.)
2	**INSPECT BATTERY** • Turn ignition key to OFF. • Inspect battery. • Is battery okay?	Yes	Replace battery, then go to Step 6.
		No	Go to next step.
3	**INSPECT POOR INSTALLATION OF GENERATOR TERMINAL** • Turn ignition key to OFF. • Inspect for looseness of generator terminal B installation nut. • Is nut loose?	Yes	Tighten generator terminal B installation nut, then go to Step 6.
		No	Go to next step.
4	**INSPECT POOR INSTALLATION OF BATTERY POSITIVE TERMINAL** • Inspect for looseness of battery positive terminal. • Is terminal loose?	Yes	Connect battery positive terminal correctly, then go to Step 6.
		No	Go to next step.
5	**INSPECT BATTERY CHARGING CIRCUIT** • Start engine. • Disconnect battery positive terminal. • Does engine stall?	Yes	Repair or replace harness between generator terminal B and battery positive terminal, then go to next step.
		No	Go to next step.

STEP	INSPECTION		ACTION
6	**VERIFY TROUBLESHOOTING OF DTC P2502 COMPLETED** • Make sure to reconnect all connectors. • Clear DTC from memory using WDS or equivalent. • Perform KOER self-test. (See F–66 KOEO/KOER SELF-TEST.) • Is same DTC present?	Yes	Replace PCM, then go to next step. (See F–43 PCM REMOVAL/INSTALLATION.)
		No	Go to next step.
7	**VERIFY AFTER REPAIR PROCEDURE** • Perform “After Repair Procedure”. (See F–66 AFTER REPAIR PROCEDURE.) • Is there any DTC present?	Yes	Go to applicable DTC troubleshooting. (See F–67 DTC TABLE.)
		No	Troubleshooting completed.

F

DTC P2503

A6E397001083W09

DTC P2503	Generator output voltage signal no electricity
DETECTION CONDITION	• PCM needs **more than 20 A** from generator, and judges generator output voltage to be **below 8.5 V** during engine running.
POSSIBLE CAUSE	• Generator malfunction • PCM and/or generator are poorly connected. • Open and/or short to GND in wiring from between generator terminal P and PCM terminal 1AA • Open and/or short to GND in wiring from between generator terminal D and PCM terminal 1AD • Drive belt misadjustment

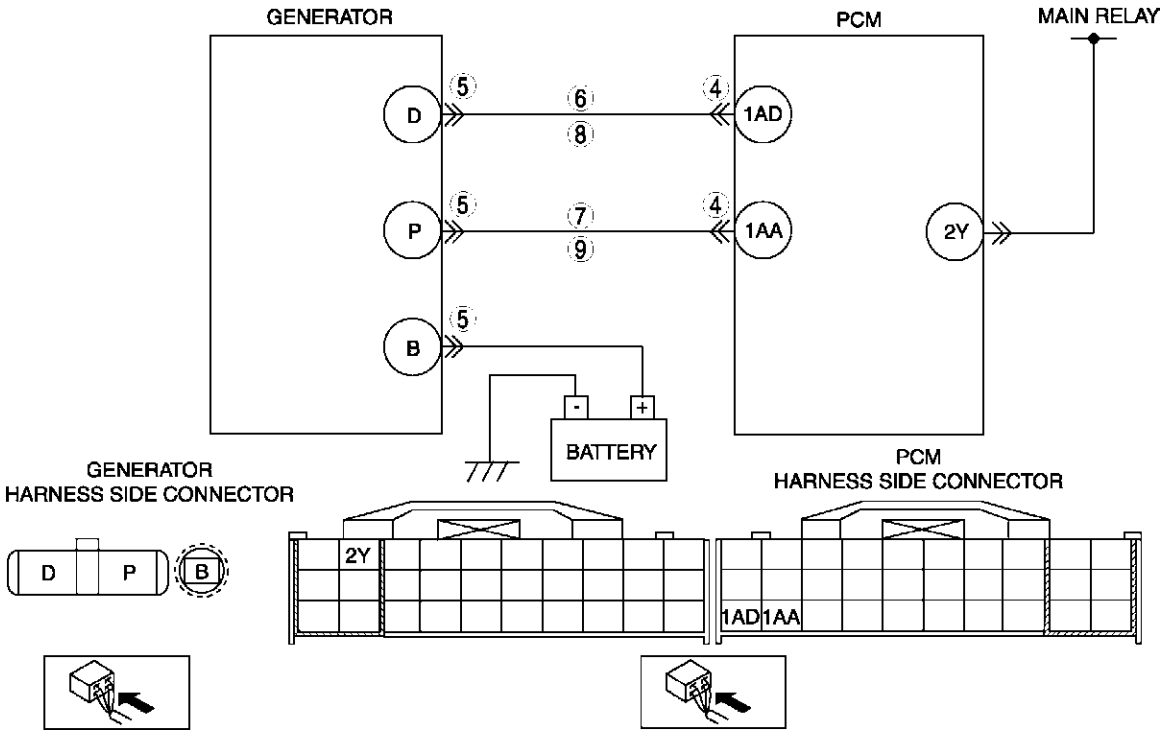

Diagnostic procedure

STEP	INSPECTION		ACTION
1	**PERFORM DTC CONFIRMATION PROCEDURE** • Perform DTC CONFIRMATION PROCEDURE. (See F–66 DTC CONFIRMATION PROCEDURE.) • Is same DTC present?	Yes	Go to next step.
		No	Intermittent concern exists. Go to INTERMITTENT CONCERN TROUBLESHOOTING procedure. (See F–227 INTERMITTENT CONCERN TROUBLESHOOTING.)
2	**INSPECT DRIVE BELT CONDITION** • Verify that drive belt auto tensioner indicator mark does not exceed limit. • Is front drive belt okay?	Yes	Go to next step.
		No	Replace and/or adjust drive belt, then go to Step 9.

STEP	INSPECTION		ACTION
3	**INSPECT POOR CONNECTION OF PCM CONNECTOR** • Turn ignition key to OFF. • Disconnect PCM connector. • Inspect for poor connection (damaged, pulled-out terminals, corrosion, etc.). • Is there a malfunction?	Yes	Repair terminals, then go to Step 9.
		No	Go to next step.
4	**INSPECT POOR CONNECTION OF GENERATOR CONNECTOR** • Disconnect generator connector. • Inspect for poor connection (damaged, pulled-out terminals, corrosion, etc.). • Is there a malfunction?	Yes	Repair or replace terminals, then go to Step 9.
		No	Go to next step.
5	**INSPECT GENERATOR CONTROL CIRCUIT FOR SHORT TO GROUND** • Inspect for continuity between generator terminal D (harness-side) and body ground. • Is there continuity?	Yes	Repair or replace harness for short to ground, then go to Step 9.
		No	Go to next step.
6	**INSPECT GENERATOR OUTPUT VOLTAGE MONITOR CIRCUIT FOR SHORT TO GROUND** • Inspect for continuity between generator terminal P (harness-side) and body ground. • Is there continuity?	Yes	Repair or replace harness for short to ground, then go to Step 9.
		No	Go to next step.
7	**INSPECT GENERATOR CONTROL CIRCUIT FOR OPEN** • Measure resistance between generator terminal D (harness-side) and PCM terminal 1AD (harness-side). • Is there continuity?	Yes	Go to next step.
		No	Repair or replace harness for open circuit, then go to Step 9.
8	**INSPECT GENERATOR OUTPUT VOLTAGE MONITOR CIRCUIT FOR OPEN CIRCUIT** • Measure resistance between generator terminal P (harness-side) and PCM terminal 1AA (harness-side). • Is there continuity?	Yes	Repair or replace generator, then go to next step.
		No	Repair or replace harness for open, then go to next step.
9	**VERIFY TROUBLESHOOTING OF DTC P2503 COMPLETED** • Make sure to reconnect all connectors. • Clear DTC from PCM memory using WDS or equivalent. • Perform KOER self-test. (See F–66 KOEO/KOER SELF-TEST.) • Is the same DTC present?	Yes	Replace PCM, then go to next step. (See F–43 PCM REMOVAL/INSTALLATION.)
		No	Go to next step.
10	**VERIFY AFTER REPAIR PROCEDURE** • Perform “After Repair Procedure”. (See F–66 AFTER REPAIR PROCEDURE.) • Is there any DTC present?	Yes	Go to applicable DTC troubleshooting. (See F–67 DTC TABLE.)
		No	Troubleshooting completed.

DTC P2504

A6E397001083W10

DTC P2504	Battery overcharge
DETECTION CONDITION	• PCM judges generator output voltage is **above 18.5 V** or battery voltage is **above 16.0 V** during engine running.
POSSIBLE CAUSE	• Short to power circuit between generator connector terminal D and PCM connector terminal 1AD • Generator malfunction • PCM and/or generator are poorly connected.

DTC P2504	Battery overcharge

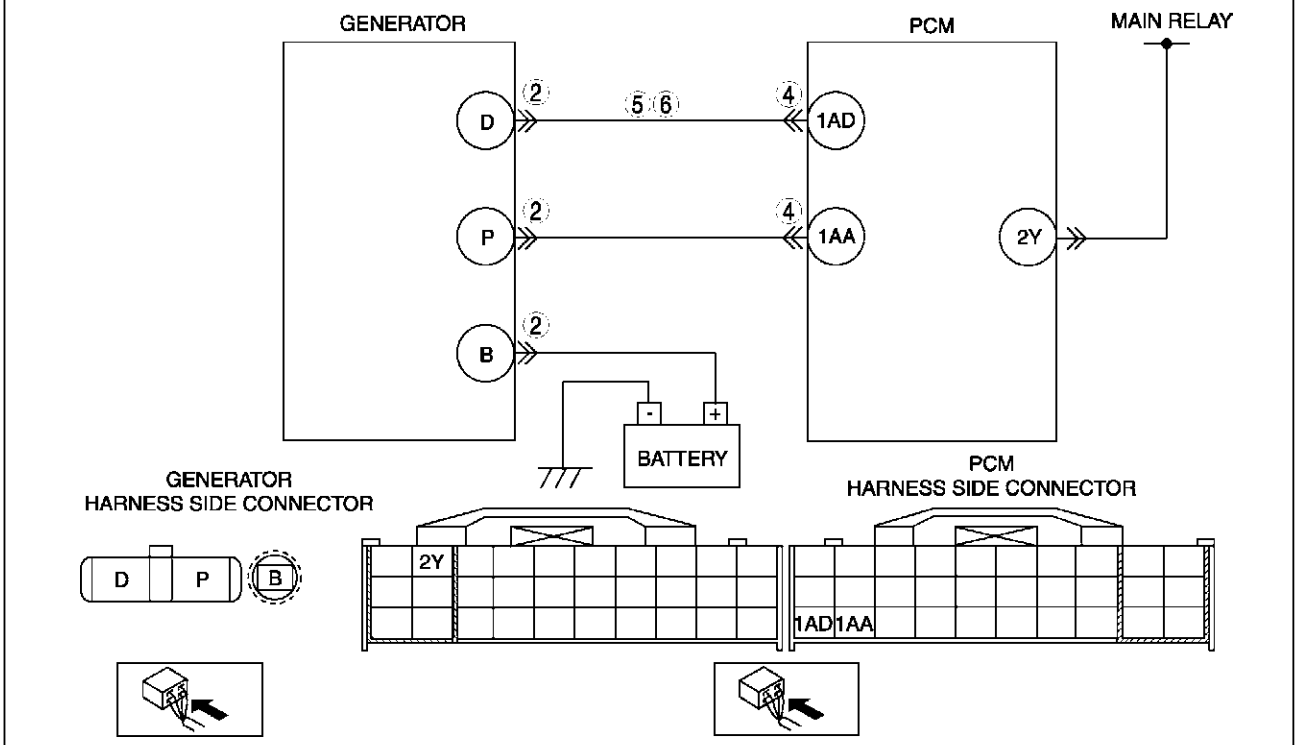

Diagnostic procedure

STEP	INSPECTION		ACTION
1	**PERFORM DTC CONFIRMATION PROCEDURE** • Perform DTC CONFIRMATION PROCEDURE. (See F–66 DTC CONFIRMATION PROCEDURE.) • Is same DTC present?	Yes	Go to next step.
		No	Intermittent concern exists. Go to INTERMITTENT CONCERN TROUBLESHOOTING procedure. (See F–227 INTERMITTENT CONCERN TROUBLESHOOTING.)
2	**INSPECT POOR CONNECTION OF GENERATOR CONNECTOR** • Turn ignition key to OFF. • Disconnect generator connector. • Inspect for poor connection (damaged, pulled-out terminals, corrosion, etc.). • Is there a malfunction?	Yes	Repair or replace terminals, then go to Step 7.
		No	Go to next step.
3	**CLASSIFY GENERATOR MALFUNCTION OR OTHER MALFUNCTION** • Turn ignition key to ON (Engine OFF). • Measure voltage between generator terminal D (harness-side) and body ground. • Is voltage **B+**?	Yes	Go to next step.
		No	Malfunction at generator. Go to Step 6.
4	**INSPECT POOR CONNECTION OF PCM CONNECTOR** • Turn ignition key to OFF. • Disconnect PCM connector. • Inspect for poor connection (damaged, pulled-out terminals, corrosion, etc.). • Is there a malfunction?	Yes	Repair or replace pins, then go to Step 7.
		No	Go to next step.
5	**INSPECT GENERATOR CONTROL CIRCUIT FOR SHORT TO POWER** • Turn ignition key to ON (engine OFF). • Measure voltage between generator terminal D (harness-side) and body ground. • Is voltage **B+**?	Yes	Repair or replace harness for short to power, then go to Step 7.
		No	Go to Step 7.

STEP	INSPECTION		ACTION
6	**INSPECT GENERATOR CONTROL TERMINAL FOR SHORT TO POWER** • Measure resistance between generator terminal D (part-side) and body ground. • Is voltage **B+**?	Yes	Repair or replace generator, then go to Step 7.
		No	Go to next step.
7	**VERIFY TROUBLESHOOTING OF DTC P2504 COMPLETED** • Make sure to reconnect all connectors. • Clear DTC from PCM memory using WDS or equivalent. • Perform KOER self-test. (See F–66 KOEO/KOER SELF-TEST.) • Is same DTC present?	Yes	Replace PCM, then go to next step. (See F–43 PCM REMOVAL/INSTALLATION.)
		No	Go to next step.
8	**VERIFY AFTER REPAIR PROCEDURE** • Perform “After Repair Procedure”. (See F–66 AFTER REPAIR PROCEDURE.) • Is there any DTC present?	Yes	Go to applicable DTC troubleshooting. (See F–67 DTC TABLE.)
		No	Troubleshooting completed.

TROUBLESHOOTING

ENGINE SYMPTOM TROUBLESHOOTING

A6E398018881W01

- Confirm trouble symptom using the following diagnostic index, then go to appropriate troubleshooting chart.

Diagnostic Index

No.	TROUBLESHOOTING ITEM		DESCRIPTION
1	Melting of main or other fuses		—
2	MIL illuminates		MIL is illuminated incorrectly.
3	Will not crank		Starter does not work.
4	Hard to start/long crank/erratic start/erratic crank		Starter cranks engine at normal speed but engine requires excessive cranking time before starting.
5	Engine stalls.	After start/at idle	Engine stops unexpectedly at idle and/or after start.
6	Cranks normally but will not start		Starter cranks engine at normal speed but engine will not run.
7	Slow return to idle		Engine takes more time than normal to return to idle speed.
8	Engine runs rough/rolling idle		Engine speed fluctuates between specified idle speed and lower speed and engine shakes excessively.
9	Fast idle/runs on		Engine speed continues at fast idle after warm-up. Engine runs after ignition switch is turned to off.
10	Low idle/stalls during deceleration		Engine stops unexpectedly at beginning of deceleration or recovery from deceleration.
11	Engine stalls/quits.	Acceleration/cruise	Engine stops unexpectedly at beginning of acceleration or during acceleration. Engine stops unexpectedly while cruising.
	Engine runs rough.	Acceleration/cruise	Engine speed fluctuates during acceleration or cruising.
	Misses	Acceleration/cruise	Engine misses during acceleration or cruising.
	Buck/jerk	Acceleration/cruise/ deceleration	Vehicle bucks/jerks during acceleration, cruising, or deceleration.
	Hesitation/stumble	Acceleration	Momentary pause at beginning of acceleration or during acceleration
	Surges	Acceleration/cruise	Momentary minor irregularity in engine output
12	Lack/loss of power	Acceleration/cruise	Performance is poor under load. (e.g., power down when climbing hills)
13	Knocking/pinging	Acceleration/cruise	Sound is produced when air/fuel mixture is ignited by something other than spark plug. (e.g., hot spot in combustion chamber)
14	Poor fuel economy		Fuel economy is unsatisfactory.
15	Emission compliance		Fails emissions test.
16	High oil consumption/leakage		Oil consumption is excessive.
17	Cooling system concerns	Overheating	Engine runs at higher than normal temperature/overheats.
18	Cooling system concerns	Runs cold	Engine does not reach normal operating temperature.
19	Exhaust smoke		Blue, black, or white smoke from exhaust system
20	Fuel odor (in engine compartment)		Gasoline fuel smell or visible leakage
21	Engine noise		Engine noise from under hood
22	Vibration concerns (engine)		Vibration from under hood or driveline
23	A/C does not work sufficiently.		A/C compressor magnetic clutch does not engage when A/C is turned on.
24	A/C is always on or A/C compressor runs continuously.		A/C compressor magnetic clutch does not disengage.
25	A/C is not cut off under WOT conditions.		A/C compressor magnetic clutch does not disengage under WOT.
26	Exhaust sulphur smell		Rotten egg smell (sulphur) from exhaust
27	Constant voltage		Incorrect constant voltage
28	Spark plug condition		Incorrect spark plug condition
29	ATX concerns	Upshift/downshift/ engagement	ATX concerns not related to engine performance

QUICK DIAGNOSTIC CHART

A6E398018881W02

x Applied

	Possible factor / Troubleshooting item		Starter motor malfunction (Mechanical or electrical)	Starter circuit including ignition switch is open.	Starter interlock switch malfunction (MTX with starter interlock system)	Improper engine oil level	Low or dead battery	Charging system malfunction	Improper engine compression	Improper valve timing	Hydrolocked engine	Improper engine oil viscosity	Improper dipstick	Base engine malfunction	Drive plate or flywheel are seized.	Improper tension or damaged drive belts	Improper engine coolant level	Water and anti-freeze mixture is improper.	Cooling system malfunction (Radiator, hoses, overflow system, thermostat, etc.)	Cooling fan system malfunction	Engine or transaxle mounts are improperly installed.	Cooling fan or condenser fan seat are improper.	Accelerator cable free play misadjustment	Cruise control cable misadjustment	Fuel quality
1	Melting of main or other fuses																								
2	MIL illuminates		x	x	x		x	x			x				x										
3	Will not crank																								
4	Hard to start/long crank/erratic start/erratic crank																								x
5	Engine stalls.	After start/at idle							x	x	x														x
6	Cranks normally but will not start								x	x	x														x
7	Slow return to idle																			x					
8	Engine runs rough/rolling idle								x	x															x
9	Fast idle/runs on																						x	x	
10	Low idle/stalls during deceleration																								
11	Engine stalls/quits.	Acceleration/cruise							x	x															x
	Engine runs rough.	Acceleration/cruise							x	x															x
	Misses	Acceleration/cruise							x	x															x
	Buck/jerk	Acceleration/cruise/ deceleration							x	x															x
	Hesitation/stumble	Acceleration							x	x															x
	Surges	Acceleration/cruise							x	x															x
12	Lack/loss of power	Acceleration/cruise							x	x															x
13	Knocking/pinging	Acceleration/cruise							x									x							
14	Poor fuel economy								x	x							x		x	x					x
15	Emission compliance								x	x				x					x						
16	High oil consumption/leakage											x	x	x											
17	Cooling system concerns	Overheating														x	x	x	x	x					
18	Cooling system concerns	Runs cold																	x	x					
19	Exhaust smoke								x					x					x						
20	Fuel odor (in engine compartment)																								
21	Engine noise					x								x		x									
22	Vibration concerns (engine)															x					x	x			
23	A/C does not work sufficiently.																								
24	A/C is always on or A/C compressor runs continuously.																								
25	A/C is not cut off under WOT conditions.																								
26	Exhaust sulfur smell																								x
27	Constant voltage																								
28	Spark plug condition								x					x											
29	ATX concerns	Upshift/downshift engagement	See Section K, TROUBLESHOOTING																						

A6E3980W001

x Applied

	Possible factor / Troubleshooting item		Variable valve timing system malfunction (L3 engine model)	VICS malfunction	Engine overheating	Air cleaner element clogging or restriction	Air leakage from intake-air system (Loose tubes, cracks, gaskets breakage)	IAC valve improper operation	Throttle body malfunction	VICS malfunction (L3 engine model)	VACS malfunction (L3 engine model)	Vacuum leakage (Vacuum hose damage, misrouting)	Ignition coil malfunction (e.g. open, short or cracks)	Initial ignition timing misadjustment (CKP sensor & crankshaft pulley misadjustment)	Spark plug malfunction	High-tension leads malfunction (Cracks, open, low resistance)	CKP sensor is damaged. (e.g. open or short circuits)	Crankshaft pulley is damaged	Improper gap between CKP sensor and crankshaft	Fuel pump malfunction (Mechanically or electrically)	Pressure regulator malfunction	Fuel hoses restriction or clogging
1	Melting of main or other fuses																					
2	MIL illuminates		x	x				x		x							x					
3	Will not crank																					
4	Hard to start/long crank/erratic start/erratic crank					x	x	x				x			x	x	x	x	x	x	x	x
5	Engine stalls.		x		x	x	x	x				x	x	x	x	x	x	x	x	x	x	x
6	Cranks normally but will not start				x	x	x	x				x	x	x	x	x	x	x	x	x	x	x
7	Slow return to idle								x													
8	Engine runs rough/rolling idle		x		x	x	x	x				x		x	x	x	x	x	x	x	x	x
9	Fast idle/runs on						x		x													
10	Low idle/stalls during deceleration						x	x				x										
11	Engine stalls/quits.	Acceleration/cruise		x	x	x	x	x	x			x			x	x	x	x	x	x	x	x
	Engine runs rough.	Acceleration/cruise		x	x	x	x	x	x			x			x	x	x	x	x	x	x	x
	Misses	Acceleration/cruise		x	x	x	x	x	x			x			x	x	x	x	x	x	x	x
	Buck/jerk	Acceleration/cruise/deceleration		x	x	x	x	x	x			x			x	x	x	x	x	x	x	x
	Hesitation/stumble	Acceleration		x	x	x	x	x	x			x			x	x	x	x	x	x	x	x
	Surges	Acceleration/cruise		x	x	x	x	x	x			x			x	x	x	x	x	x	x	x
12	Lack/loss of power	Acceleration/cruise	x	x	x	x	x		x	x		x			x		x	x	x	x	x	x
13	Knocking/pinging	Acceleration/cruise			x															x	x	
14	Poor fuel economy		x	x		x				x					x	x					x	
15	Emission compliance					x	x		x			x			x	x				x	x	x
16	High oil consumption/leakage																					
17	Cooling system concerns	Overheating																				
18	Cooling system concerns	Runs cold																				
19	Exhaust smoke					x									x	x				x	x	x
20	Fuel odor (in engine compartment)																				x	
21	Engine noise						x				x	x										
22	Vibration concerns (engine)																					
23	A/C does not work sufficiently.																					
24	A/C is always on or A/C compressor runs continuously.																					
25	A/C is not cut off under WOT conditions.																					
26	Exhaust sulfur smell											x								x	x	x
27	Constant voltage																					
28	Spark plug condition					x									x		x			x	x	x
29	ATX concerns	Upshift/downshift engagement	See Section K, TROUBLESHOOTING																			

A6E3980W002

F

x Applied

Possible factor / Troubleshooting item			Injectors malfunction (Leakage or clogging, inope-rative	Fuel leakage from fuel system (including insulator, injector O-ring)	Fuel filters restriction or clogging	CMP sensor is damaged. (e.g. open or short circuit)	Camshaft is damaged..	Improper air/fuel mixture ratio control	Exhaust system restriction or clogging	Catalytic converter malfunction	EGR system malfunction	EVAP control system malfunction	PCV valve malfunction	Constant voltage supply circuit malfunction	Main relay malfunction (Mechanically or electrically)	ECT sensor malfunction	TR sensor misadjustment (ATX)	TR sensor malfunction (ATX)	Break switch and related circuit malfunction	Manifold absolute pressure sensor and related circuit malfunction	HO2S and related circuit malfunction
1	Melting of main or other fuses																					
2	MIL illuminates					x		x								x	x		x	x	x
3	Will not crank																	x			
4	Hard to start/long crank/erratic start/erratic crank				x			x	x		x	x	x								x
5	Engine stalls.	After start/at idle	x	x				x	x		x	x	x		x						x
6	Cranks normally but will not start		x	x				x	x		x	x	x	x	x						x
7	Slow return to idle															x					
8	Engine runs rough/rolling idle		x		x	x	x	x	x		x	x	x								x
9	Fast idle/runs on															x					
10	Low idle/stalls during deceleration							x				x					x		x		x
11	Engine stalls/quits.	Acceleration/cruise	x		x	x	x	x	x		x	x	x	x	x						x
	Engine runs rough.	Acceleration/cruise	x		x	x	x	x	x		x	x	x	x	x						x
	Misses	Acceleration/cruise	x		x	x	x	x	x		x	x	x	x	x						x
	Buck/jerk	Acceleration/cruise/ deceleration	x		x	x	x	x	x		x	x	x	x	x						x
	Hesitation/stumble	Acceleration	x		x	x	x	x	x		x	x	x	x	x						x
	Surges	Acceleration/cruise	x		x	x	x	x	x		x	x	x	x	x						x
12	Lack/loss of power	Acceleration/cruise	x			x	x		x		x	x	x			x					
13	Knocking/pinging	Acceleration/cruise				x															
14	Poor fuel economy				x	x	x		x				x								
15	Emission compliance				x	x	x	x	x	x	x	x	x								x
16	High oil consumption/leakage												x								
17	Cooling system concerns	Overheating																			
18	Cooling system concerns	Runs cold																			
19	Exhaust smoke		x										x								
20	Fuel odor (in engine compartment)			x								x									
21	Engine noise																				
22	Vibration concerns (engine)																				
23	A/C does not work sufficiently.																				
24	A/C is always on or A/C compressor runs continuously.																				
25	A/C is not cut off under WOT conditions.																				
26	Exhaust sulfur smell				x							x									
27	Constant voltage													x		x		x		x	x
28	Spark plug condition		x	x				x								x					
29	ATX concerns	Upshift/downshift/engagement	See Section K, TROUBLESHOOTING																		

A6E3980W003

x Applied

	Possible factor / Troubleshooting item		IAT sensor and related circuit malfunction	Barometric pressure sensor malfunction	Neutral or clutch switch and related circuit malfunction (MTX)	MAF sensor and related circuit malfunction	Knock sensor and related circuit malfunction	TP sensor and related circuit malfunction	TP sensor misadjustment (including looseness)	P/S pressure switch and related circuit malfunction	Improper refrigerant charging amount	A/C relay (A/C control signal circuit malfunction	A/C compressor magnetic clutch malfunction	Condenser fan system malfunction	Improper load signal input	Clutch slippage	ATX related parts malfunction	VSS and related circuit malfunction	Improper ATF level	Brake dragging	Loose parts	Improper balance of wheels and tires	Drive line malfunction	Suspension malfunction	PATS operating (if equipped)
1	Melting of main or other fuses																								
2	MIL illuminates		x	x	x	x	x	x		x								x							
3	Will not crank																								x
4	Hard to start/long crank/erratic start/erratic crank					x																			
5	Engine stalls.	After start/at idle		x							x	x													x
6	Cranks normally but will not start																								x
7	Slow return to idle																								
8	Engine runs rough/rolling idle			x						x	x	x		x	x										
9	Fast idle/runs on														x										
10	Low idle/stalls during deceleration			x	x	x		x	x			x													
11	Engine stalls/quits.	Acceleration/cruise		x		x		x	x		x	x				x	x	x							
	Engine runs rough.	Acceleration/cruise		x		x		x	x		x	x				x	x	x							
	Misses	Acceleration/cruise				x		x	x		x	x				x	x	x							
	Buck/jerk	Acceleration/cruise /deceleration				x		x	x		x	x				x	x	x							
	Hesitation/stumble	Acceleration		x		x		x	x		x	x				x	x	x							
	Surges	Acceleration/cruise				x		x	x		x	x				x	x	x							
12	Lack/loss of power	Acceleration/cruise				x		x			x	x				x	x	x		x					
13	Knocking/pinging	Acceleration/cruise	x			x	x																		
14	Poor fuel economy					x								x		x			x	x					
15	Emission compliance			x																					
16	High oil consumption/leakage																								
17	Cooling system concerns	Overheating									x	x		x											
18	Cooling system concerns	Runs cold												x											
19	Exhaust smoke																								
20	Fuel odor (in engine compartment)																								
21	Engine noise																				x				
22	Vibration concerns (engine)																				x	x	x	x	
23	A/C does not work sufficiently.										x	x	x												
24	A/C is always on or A/C compressor runs continuously.											x	x												
25	A/C is not cut off under WOT conditions.							x	x																
26	Exhaust sulfur smell																								
27	Constant voltage		x	x		x		x				x					x								
28	Spark plug condition				x	x																			
29	ATX concerns	Upshift/downshift/engagement	See Section K, TROUBLESHOOTING																						

A6E3980W004

NO.1 MELTING OF MAIN OR OTHER FUSES

A6E398018881W03

1	MELTING OF MAIN OR OTHER FUSES

[TROUBLESHOOTING HINTS]
Inspect condition of fuse.

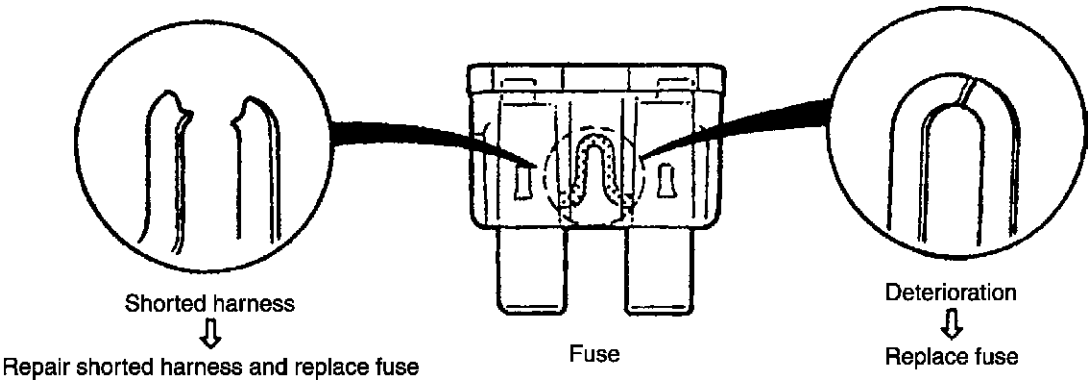

Damaged fuse	Related wiring harness
MAIN	• IG KEY2 fuse • AD FAN fuse • FAN fuse
ENG +B	• PCM
IG KEY1	• Ignition switch — ENGINE IG fuse — METER IG fuse
IG KEY2	• Ignition switch
AD FAN	• Cooling fan relay — Cooling fan motor
FAN	• Cooling fan relay (L8-DE, LF-DE (except G.C.C. specs.) — Cooling fan motor
ENGINE IG	• Main relay — PCM • Ignition coil • Condenser
METER IG	• Cooling fan relay — PCM
ENG BAR	• VSS (ATX) • OCV • VIS solenoid valve • VAD control solenoid valve • Purge solenoid valve • EGR valve • MAF/IAT sensor
ENG BAR2	• Heated oxygen sensor heater
INJ	• PCM • Fuel pump relay — PCM • Fuel injector
FUEL PUMP	• Fuel pump relay — Fuel pump

NO.2 MIL ILLUMINATES

A6E398018881W04

2	MIL ILLUMITATES
DESCRIPTION	MIL is illuminated incorrectly.
POSSIBLE CAUSE	• PCM illuminates for emission-related concern (DTC is stored in PCM) • Instrument cluster malfunction **Note** • If MIL blinks at steady rate, misfire condition could possibly exist.

Diagnostic procedure

STEP	INSPECTION	RESULTS	ACTION
1	Connect WDS or equivalent to DLC-2. Retrieve any DTC. Are there DTC displayed?	Yes	**DTC is displayed:** • Go to appropriate DTC test.
		No	**No DTC is displayed:** • Inspect instrument cluster operation. See Section T.
2	Verify test results. • If okay, return to diagnostic index to service any additional symptoms. • If malfunction remains, replace PCM.		

NO.3 WILL NOT CRANK

A6E398018881W05

3	WILL NOT CRANK
DESCRIPTION	Starter does not work.
POSSIBLE CAUSE	• Open starter circuit between ignition switch and starter • TR switch malfunction (ATX) • TR switch misadjustment (ATX) • Low or dead battery. • Charging system malfunction. • Starter interlock switch malfunction (MTX with starter interlock system). • Starter malfunction • Seized/hydrolocked engine, flywheel or drive plate • Immobilizer system (PATS) and/or circuit malfunction (if equipped).

Diagnostic procedure

STEP	INSPECTION	RESULTS	ACTION
1	**Note** • The following test should be perform for vehicles with immobilizer system. Go to Step 10 for vehicles without immobilizer system. Connect WDS or equivalent to DLC-2. Do following conditions appear? • Engine is not completely started. • DTC B1681 is displayed.	Yes	**Both conditions appear:** Go to Step 4.
		No	**Either or other condition appears:** Go to next step.
2	Is coil connector securely connected to coil?	Yes	Go to next step.
		No	Connect coil connector securely. Return to Step 1.
3	Does security light illuminate?	Yes	Go to next step.
		No	Inspect instrument cluster and wiring harness.
4	Connect WDS or equivalent to DLC-2 and retrieve DTC. **DTC** **B1213, B1342, B1600, B1601, B1602, B1681, B2103, B2431**	Yes	Go to appropriate DTC test.
		No	Go to next step.
5	Is there continuity between PCM GND terminals 4X, 2AB, 2AC and GND?	Yes	Go to next step.
		No	Repair or replace wiring harness.
6	Measure voltage between PCM GND terminals 4X, 2AB, 2AC and coil terminal C. Is the voltage **below 1.0?**	Yes	Go to next step.
		No	Repair or replace wiring harness.
7	Turn ignition switch ON position. Access VPWR PID. Is VPWR PID okay? **Specification** **Battery voltage**	Yes	Go to next step.
		No	Repair or replace wiring harness.
8	Disconnect coil connector. Turn ignition switch to ON position. Is there battery voltage at coil connector terminal D (harness-side)?	Yes	Inspect for following: • Open or short circuit between coil terminal A and PCM terminal 2Q. • Open or short circuit between coil terminal B and PCM terminal 2T.
		No	Repair or replace wiring harness between coil connector terminal D and fuse panel.

STEP	INSPECTION	RESULTS	ACTION
9	Is there continuity between PCM terminal 4I and starter relay with clutch pedal depressed (MTX with starter interlock system), P or N position (ATX)?	Yes	Go to next step.
		No	Repair replace wiring harness.
10	Inspect following: • Battery connection • Battery condition • Transaxle is in Park or Neutral. (ATX) • Clutch is fully depressed. (MTX with starter interlock system) • Fuses Are all items okay?	Yes	Go to next step.
		No	Service as necessary. Repeat Step 10.
11	Is clicking sound heard from starter when ignition switch is turned to START?	Yes	Go to next step.
		No	Go to Step 13.
12	Inspect starting system. (See G–13 STARTER INSPECTION.) Is starting system okay?	Yes	Inspect for seized/hydrolocked engine, flywheel or drive plate. (See H–15 FLYWHEEL INSPECTION.)
		No	Repair or replace components as required.
13	Do any other electrical accessories work?	Yes	Go to next step.
		No	Inspect charging system. (See G–4 BATTERY INSPECTION.) (See G–7 GENERATOR INSPECTION.)
14	**Note** • Following test should be performed on ATX only. For MTX, go to next step. Connect WDS or equivalent to DLC-2. Access TR PID. Turn ignition switch to ON position. Is TR PID indicated P/N when selecting P or N position?	Yes	Go to next step.
		No	Inspect adjustment of TR switch. If TR switch is adjusted properly, inspect for open circuit between TR switch and PCM terminal 1W or starter.
15	Connect WDS or equivalent to DLC-2. Retrieve any continuous memory DTCs. Are there any continuous memory DTCs displayed?	Yes	**DTC is displayed:** Go to appropriate DTC test. **Communication error message is displayed:** Inspect for following: • Open circuit between main relay and PCM terminal 2Y or 4V • Open circuit between main relay terminal E and PCM terminal 2X • Main relay is stuck open. • Open or poor GND circuit (PCM terminal 4X, 2AB or 2AC) • Poor connection of vehicle body GND
		No	**No DTC is displayed:** Inspect following: • START circuit in ignition switch • Open circuit between ignition switch and starter • Starter interlock switch (MTX with stater interlock system)
16	Retrieve any KOEO DTCs. Are there DTCs displayed during KOEO inspection?	Yes	**DTC is displayed:** Go to appropriate DTC test.
		No	**No DTC is displayed:** Inspect following: • START circuit in ignition switch • Open circuit between ignition switch and starter • Starter interlock switch (MTX with stater interlock system)
17	Verify test results. • If okay, return to diagnostic index to service any additional symptoms. • If malfunction remains, replace PCM.		

NO.4 HARD TO START/LONG CRANK/ERRATIC START/ERRATIC CRANK

A6E398018881W06

4	HARD TO START/LONG CRANK/ERRATIC START/ERRATIC CRANK
DESCRIPTION	• Starter cranks engine at normal speed but engine requires excessive cranking time before starting. • Battery is in normal condition.
POSSIBLE CAUSE	• Spark leakage from high-tension leads • Vacuum leakage • Poor fuel quality • Starting system malfunction • Spark plug malfunction • Air leakage from intake-air system • Erratic signal from CKP sensor • Erratic signal from CMP sensor • Improper air/fuel mixture ratio control • Air cleaner restriction • IAC valve malfunction • PCV valve malfunction • Inadequate fuel pressure • Purge solenoid valve malfunction • MAF sensor contamination • Restriction in exhaust system • EGR valve malfunction • Pressure regulator malfunction **Warning** **The following troubleshooting flow chart contains the fuel system diagnosis and repair procedures. Read the following warnings before performing the fuel system services:** • **Fuel vapor is hazardous. It can easily ignite, causing serious injury and damage. Always keep sparks and flames away from fuel.** • **Fuel line spills and leakage are dangerous. Fuel can ignite and cause serious injuries or death and damage. Fuel can also irritate skin and eyes. To prevent this, always complete "BEFORE REPAIR PROCEDURE" and "AFTER REPAIR PROCEDURE" described in this manual.** **(See F–17 BEFORE REPAIR PROCEDURE.)** **(See F–17 AFTER REPAIR PROCEDURE.)** **Caution** • **Disconnecting/connecting quick release connector without cleaning it may possibly cause damage to fuel pipe and quick release connector. Always clean quick release connector joint area before disconnecting/connecting, and make sure that it is free of foreign material.**

Diagnostic procedure

STEP	INSPECTION	RESULTS	ACTION
1	Inspect for following: • Vacuum leakage • Proper fuel quality (e.g. proper octane, contamination, winter/summer blend) • Loose bands on intake-air system • Cracks on intake-air system parts • Air cleaner restriction Are all items okay?	Yes	Go to next step.
		No	Service as necessary. Repeat Step 1.
2	Connect WDS or equivalent to DLC-2. Retrieve any KOEO and KOER DTC. Is any KOEO or KOER DTC displayed?	Yes	**DTC is displayed:** Go to appropriate DTC test.
		No	**No DTC is displayed:** Go to next step.
3	Is engine overheating?	Yes	Go to symptom troubleshooting “No.17 Cooling system concerns – Overheating”.
		No	Go to next step.
4	Inspect for cracks on high-tension leads. Are there any cracks on high-tension leads?	Yes	Repair suspected high-tension leads.
		No	Go to next step.
5	Inspect spark plug conditions. Is spark plug wet, covered with carbon or grayish white?	Yes	**Spark plug is wet or covered with carbon:** Inspect for fuel leakage from fuel injector. **Spark plug is grayish white:** Inspect for clogged fuel injector.
		No	Install spark plugs on original cylinders. Go to next step.

STEP	INSPECTION	RESULTS	ACTION
6	Visually inspect CKP sensor and teeth of crankshaft pulley. Are CKP sensor and teeth of crankshaft pulley okay?	Yes	Go to next step.
		No	Replace malfunctioning parts.
7	Measure gap between CKP sensor and teeth of crankshaft pulley. **Specification** **0.5—1.9 mm {0.020—0.75 in}** Is gap within specification?	Yes	Go to next step.
		No	Adjust CKP sensor.
8	Remove and shake PCV valve. Does PCV valve rattle?	Yes	Go to next step.
		No	Replace PCV valve.
9	Install fuel pressure gauge between fuel pipe and fuel distributor. Connect a jumper wire between F/P terminal at DLC-2 in engine compartment and GND. Turn ignition switch to ON position. Is fuel line pressure correct with ignition switch ON? (See F–20 FUEL LINE PRESSURE INSPECTION)	Yes	Go to next step.
		No	**Zero or low:** Inspect for clogged fuel line. If okay, replace fuel pump unit. **High:** Replace fuel pump unit.
10	Is fuel line pressure held after ignition switch is turned off? (See F–20 FUEL LINE PRESSURE INSPECTION)	Yes	Go to next step.
		No	Inspect fuel injector. If fuel injector is okay, replace fuel pump unit.
11	Disconnect a vacuum hose from purge solenoid valve and plug opening end of vacuum hose. Attempt to start engine. Is starting condition improved?	Yes	Inspect if purge solenoid valve sticks open.
		No	Go to next step.
12	Inspect MAF sensor for contamination. Is there any contamination?	Yes	Replace MAF sensor.
		No	Go to next step.
13	Is there restriction in exhaust system?	Yes	Inspect exhaust system.
		No	Go to next step.
14	Inspect engine condition while tapping EGR valve housing. Does engine condition improve?	Yes	Replace EGR valve.
		No	Go to next step.
15	Inspect starting system. (See G–13 STARTER INSPECTION.) Is starting system normal?	Yes	Inspect for loose connectors or poor terminal contact. If okay, remove EGR valve and visually inspect for mechanically stuck EGR valve.
		No	Repair or replace components as required.
16	Verify test results. • If okay, return to diagnostic index to service any additional symptoms. • If malfunction remains, replace PCM.		

NO.5 ENGINE STALLS-AFTER START/AT IDLE

A6E398018881W07

5	ENGINE STALLS—AFTER START/AT IDLE
DESCRIPTION	• Engine stops unexpectedly.
POSSIBLE CAUSE	• A/C system operation is improper • Air leakage from intake-air system parts • Purge solenoid valve malfunction • Improper operation of IAC valve • EGR valve malfunction • No signal from CKP sensor due to sensor, related wire or wrong installation • Vacuum leakage • Engine overheating • Low engine compression • Spark leakage from high-tension leads • Poor fuel quality • PCV valve malfunction • Air cleaner restriction • Restriction in exhaust system • Electrical connector disconnection • Open or short circuit in fuel pump body and related harness • No battery power supply to PCM or poor GND • Inadequate fuel pressure • Fuel pump body mechanical malfunction • Fuel leakage from fuel injector • Fuel injector clogging • Ignition coil malfunction • Improper air/fuel mixture ratio control • Improper valve timing • Improper operation variable valve timing control system (L3-VE) • Immobilizer system (PATS) and/or circuit malfunction (if equipped) • Pressure regulator malfunction **Warning** **The following troubleshooting flow chart contains the fuel system diagnosis and repair procedures. Read the following warnings before performing the fuel system services:** • **Fuel vapor is hazardous. It can easily ignite, causing serious injury and damage. Always keep sparks and flames away from fuel.** • **Fuel line spills and leakage are dangerous. Fuel can ignite and cause serious injuries or death and damage. Fuel can also irritate skin and eyes. To prevent this, always complete "BEFORE REPAIR PROCEDURE" and "AFTER REPAIR PROCEDURE" described in this manual.** **(See F–17 BEFORE REPAIR PROCEDURE.)** **(See F–17 AFTER REPAIR PROCEDURE.)** **Caution** • **Disconnecting/connecting quick release connector without cleaning it may possibly cause damage to fuel pipe and quick release connector. Always clean quick release connector joint area before disconnecting/connecting, and make sure that it is free of foreign material.**

Diagnostic procedure

STEP	INSPECTION	RESULTS	ACTION
1	**Note** • The following test should be performed for vehicles with immobilizer system. Go to Step 10 for vehicles without immobilizer system. Connect WDS or equivalent to DLC-2. Do following conditions appear? • Engine is not completely started. • DTC B1681 is displayed.	Yes	**Both conditions appear:** Go to Step 3.
		No	**Either or other condition appears:** Go to next step.
2	Does engine stall after **approx. 2 seconds** since engine is started?	Yes	Go to next step.
		No	Immobilizer systemis okay. Go to Step 10.
3	Is coil connector securely connected to coil?	Yes	Go to next step.
		No	Connect coil connector securely. Return to Step 2.

STEP	INSPECTION	RESULTS	ACTION
4	Does security light illuminate?	Yes	Go to next step.
		No	Inspect instrument cluster and wiring harness.
5	Connect WDS or equivalent to DLC-2 and retrieve DTC. Are any of following DTCs displayed? **DTC** **B1213, B1342, B1600, B1602, B1681, B2103, B2431**	Yes	Go to appropriate DTC test.
		No	Go to next step.
6	Is there continuity between PCM GND terminals 4X, 2AB, 2AC and GND?	Yes	Go to next step.
		No	Repair or replace wiring harness.
7	Measure voltage between PCM GND terminals 4X, 2AB, 2AC and coil terminal C. Is voltage **below 1.0 V**?	Yes	Go to next step.
		No	Repair or replace wiring harness.
8	Turn ignition switch to ON position. Access VPWR PID. Is VPWR PID okay? **VPWR PID** **Battery voltage**	Yes	Go to next step.
		No	Repair or replace wiring harness.
9	Disconnect coil connector. Turn ignition switch to ON position. Is there battery voltage at coil connector terminal D?	Yes	Inspection for following: • Open or short circuit between coil terminal A and PCM terminal 2Q. • Open or short circuit between coil terminal B and PCM terminal 2T.
		No	Repair or replace wiring harness between coil connector terminal D and fuse panel.
10	Verify following: • Vacuum connection • Air cleaner element • No air leakage from intake-air system • No restriction of intake-air system • Proper sealing of intake manifold and components attached to intake manifold: EGR valve, IAC valve • Ignition wiring • Fuel quality: proper octane, contamination, winter/summer blend • Electrical connections • Smooth operation of throttle valve Are all items okay?	Yes	Go to next step.
		No	Service as necessary. Repeat Step 10.
11	Turn ignition switch to ON position. Disconnect TP sensor connector. Measure voltage at TP sensor connector VREF terminal with ignition switch ON. **Voltage** **4.5—5.5 V** Is voltage okay?	Yes	Go to next step.
		No	Go to troubleshooting "No.27 Constant voltage".
12	Connect WDS or equivalent to DLC-2. Retrieve any continuous memory, KOEO and KOER DTCs. If engine stalls, retrieve continuous memory and KOEO DTCs. Are there any DTC displayed?	Yes	**DTC is displayed:** Go to appropriate DTC test. **Communication error message is displayed:** Inspect for following: • Open circuit between main relay and PCM terminal 2Y or 4V • Open main relay GND circuit • Main relay is stuck open. • Open or poor GND circuit (PCM terminal 4X, 2AB or 2AC) • Poor connection of vehicle body GND
		No	**No DTC is displayed:** Go to next step.
13	Attempt to start engine at part throttle. Does engine run smoothly at part throttle?	Yes	Inspect IAC valve and wiring harness.
		No	Go to next step.

STEP	INSPECTION	RESULTS	ACTION
14	Connect WDS or equivalent to DLC-2. Access RPM PID. Is RPM PID indicating engine speed during engine cranking?	Yes	Go to next step.
		No	Inspect for following:. • Open or short circuit in CKP sensor • Open or short circuit between CKP sensor and PCM terminal 2C or 2D • Open or short circuit in CKP sensor harnesses If CKP sensor and harness are okay, go to next step.
15	Visually inspect CKP sensor and teeth of crankshaft pulley. Are CKP sensor and teeth of crankshaft pulley okay?	Yes	Go to next step.
		No	Replace malfunctioning parts.
16	Measure gap between CKP sensor and teeth of crankshaft pulley. **Specification** **0.5—1.9 mm {0.020—0.075 in}** Is gap within specification?	Yes	Go to next step.
		No	Adjust CKP sensor.
17	Inspect for cracks on high-tension leads. Are there any cracks on high-tension leads?	Yes	Repair suspected high-tension leads.
		No	Go to next step.
18	Is strong blue spark visible at each disconnected high-tension lead while cranking engine?	Yes	Go to next step. If symptom occurs with A/C on, go to Step 24.
		No	Inspect for following: • Open or short circuit in ignition coil • Open circuit in high-tension leads • Open circuit between ignition coil connector GND terminal and body GND • Open circuit between ignition switch and ignition coil • Open circuit between ignition coil and PCM terminal 1A or 1B
19	Inspect spark plug condition. Is spark plug wet, covered with carbon or grayish white?	Yes	**Spark plug is wet or covered with carbon:** Inspect for fuel leakage from injector. **Spark plug is grayish white:** Inspect for clogged fuel injector.
		No	Install spark plugs on original cylinders. Go to next step.
20	Remove and shake PCV valve. Does PCV valve rattle?	Yes	Go to next step.
		No	Replace PCV valve.
21	Inspect for restriction in the exhaust system. Is there any restriction?	Yes	Inspect exhaust system.
		No	Go to next step.
22	Install fuel pressure gauge between fuel pipe and fuel distributor. Connect jumper wire between F/P terminal at DLC-2 in engine compartment and GND. Turn ignition switch to ON position. Is fuel line pressure correct with ignition switch ON? (See F–20 FUEL LINE PRESSURE INSPECTION)	Yes	Go to next step.
		No	**Zero or low:** Inspect for clogged fuel line. If okay, replace fuel pump unit. **High:** Replace fuel pump unit.
23	Visually inspect for fuel leakage at fuel injector O-ring and fuel line. Service as necessary. Is fuel line pressure held after ignition switch is turned off? (See F–20 FUEL LINE PRESSURE INSPECTION)	Yes	Go to next step.
		No	Inspect fuel injector. If fuel injector is okay, replace fuel pump unit.

F

STEP	INSPECTION	RESULTS	ACTION
24	**Note** • Following test is for stall concerns with A/C on. If other symptoms exist, go to next step. Connect pressure gauges to A/C low and high pressure side lines. Turn A/C on and measure low side and high side pressures. Are pressures within specifications? (See U–12 REFRIGERANT PRESSURE CHECK.)	Yes	Go to next step.
		No	If A/C is always on, go to symptom troubleshooting "No.24 A/C is always on or A/C compressor runs continuously". For other symptoms, inspect following: • Refrigerant charging amount • Condenser fan operation
25	Disconnect vacuum hose between purge solenoid valve and intake manifold from purge solenoid side. Plug opening end of vacuum hose. Start engine. Is engine stall now eliminated?	Yes	Inspect if purge solenoid valve sticks open. Inspect evaporative emission control system.
		No	Go to next step.
26	Is air leakage felt or heard at intake-air system components while racing engine to higher speed?	Yes	Repair or replace.
		No	Go to next step.
27	Inspect engine condition while tapping EGR valve housing. Does engine condition improve?	Yes	Replace EGR valve.
		No	Go to next step.
28	**Note** • The following test should be performed for vehicles with variable valve timing control system. Go to next step for vehicles without variable valve timing control system. Inspect variable valve timing control system operation. (See F–239 Variable Valve Timing Control System Operation Inspection.) Does variable valve timing control work properly?	Yes	Go to next step.
		No	Repair or replace malfunctioning parts.
29	Is engine compression correct?	Yes	Inspect valve timing.
		No	Inspect for cause.
30	Verify test results. • If okay, return to diagnostic index to service any additional symptoms. • If malfunction remains, replace PCM.		

NO.6 CRANKS NORMALLY BUT WILL NOT START

A6E398018881W08

6	CRANKS NORMALLY BUT WILL NOT START
DESCRIPTION	• Starter cranks engine at normal speed but engine will not run. • Refer to symptom troubleshooting "No.5 Engine stalls" if this symptom appears after engine stall. • Fuel is in tank. • Battery is in normal condition.
POSSIBLE CAUSE	• No battery power supply to PCM • Air leakage from intake-air system • Open PCM GND or vehicle body GND • Improper operation of IAC valve • EGR valve malfunction • No signal from CKP sensor due to sensor, related wire or incorrect installation • No signal from CMP sensor due to sensor, related wire or incorrect installation • Low engine compression • Engine overheating • Vacuum leakage • Spark leakage from high-tension leads • Improper air/fuel mixture ratio control • Poor fuel quality • PCV valve malfunction • Air cleaner restriction • Restriction in exhaust system • Disconnected electrical connector • Open or short circuit in fuel pump body and related harness • Inadequate fuel pressure • Fuel pump mechanical malfunction • Fuel leakage from injector • Fuel injector is clogged. • Purge solenoid valve malfunction • Spark plug malfunction • Ignition coil malfunction • Improper variable valve timing control system operation (L3) • Improper valve timing • Immobilizer system (PATS) and/or circuit malfunction (if equipped) • Pressure regulator malfunction **Warning** **The following troubleshooting flow chart contains the fuel system diagnosis and repair procedures. Read the following warnings before performing the fuel system services:** • **Fuel vapor is hazardous. It can easily ignite, causing serious injury and damage. Always keep sparks and flames away from fuel.** • **Fuel line spills and leakage are dangerous. Fuel can ignite and cause serious injuries or death and damage. Fuel can also irritate skin and eyes. To prevent this, always complete "BEFORE REPAIR PROCEDURE" and "AFTER REPAIR PROCEDURE" described in this manual.** **(See F–17 BEFORE REPAIR PROCEDURE.)** **(See F–17 AFTER REPAIR PROCEDURE.)** **Caution** • **Disconnecting/connecting quick release connector without cleaning it may possibly cause damage to fuel pipe and quick release connector. Always clean quick release connector joint area before disconnecting/connecting, and make sure that it is free of foreign material.**

Diagnostic procedure

STEP	INSPECTION	RESULTS	ACTION
1	**Note** • Following test should be performed for vehicles with immobilizer system. Go to Step 10 for vehicles without immobilizer system. Connect WDS or equivalent to DLC-2. Do any of following conditions appear? • Engine is not completely started. • DTC B1681 is displayed.	Yes	**Both conditions appear:** Go to Step 3.
		No	**Either or other condition appears:** Go to next step.
2	Does engine stall after **approx. 2 seconds** since engine is started?	Yes	Go to next step.
		No	Immobilizer system is okay. Go to Step 10.

STEP	INSPECTION	RESULTS	ACTION
3	Is coil connector securely connected to coil?	Yes	Go to next step.
		No	Connect coil connector securely. Return to Step 2.
4	Does security light illuminate?	Yes	Go to next step.
		No	Inspect instrument cluster and wiring harness.
5	Connect WDS equivalent to DLC-2 and retrieve DTC. Are any of following DTCs displayed? **DTC** **B1213, B1342, B1600, B1601, B1602, B1681, B2103, B2431**	Yes	Go to appropriate DTC test.
		No	Go to next step.
6	Is there continuity between PCM GND terminals 4X, 2AB, 2AC and GND?	Yes	Go to next step.
		No	Repair or replace wiring harness.
7	Measure voltage between PCM GND terminals 4X, 2AB, 2AC and coil terminal C. Is voltage **below 1.0 V**?	Yes	Go to next step.
		No	Repair or replace wiring harness.
8	Turn ignition switch to ON position. Access VPWR PID. Is VPWR PID okay? **VPWR PID** **Battery voltage**	Yes	Go to next step.
		No	Repair or replace wiring harness.
9	Disconnect coil connector. Turn ignition switch to ON position. Is there battery voltage at coil connector terminal D?	Yes	Inspect for following: • Open or short circuit between coil terminal A and PCM terminal 2Q • Open or short circuit between coil terminal B and PCM terminal 2T
		No	Repair or replace wiring harness between coil connector terminal D and fuse panel.
10	Verify following: • Vacuum connection • External fuel shut off or accessory (kill switch, alarm etc.) • Fuel quality: proper octane, contamination, winter/summer blend • No air leakage from intake-air system • Proper sealing of intake manifold and components attached to intake manifold: EGR valve, IAC valve • Ignition wiring • Electrical connections • Fuses • Smooth operation of throttle valve Are all items okay?	Yes	Go to next step.
		No	Service as necessary. Repeat Step 10.
11	Connect WDS or equivalent to DLC-2. Retrieve any continuous memory and KOEO DTC. Are there any DTCs displayed?	Yes	**DTC is displayed:** Go to appropriate DTC test. **Communication error message is displayed:** Inspect for following: • Open circuit between main relay and PCM terminal 2Y or 4V • Open main relay GND circuit • Main relay is stuck open. • Open or poor GND circuit (PCM terminal 4X, 2AB, or 2AC) • Poor connection of vehicle body GND
		No	**No DTC is displayed:** Go to next step.
12	Turn ignition switch to ON position. Disconnect TP sensor connector. Measure voltage at TP sensor connector VREF terminal with ignition switch to ON position. **Voltage** **4.5—5.5 V** Is voltage okay?	Yes	Go to next step.
		No	Go to troubleshooting "No.27 Constant voltage".
13	Does engine start with throttle closed?	Yes	Go to Step 29.
		No	Go to next step.

STEP	INSPECTION	RESULTS	ACTION
14	Will engine start and run smoothly at part throttle?	Yes	Inspect IAC valve and wiring harness.
		No	Go to next step.
15	Connect WDS or equivalent to DLC-2. Access RPM PID. Is RPM PID indicating engine speed when cranking engine?	Yes	Go to next step.
		No	Inspect for following: • Open or short circuit in CKP sensor • Open or short circuit between CKP sensor and PCM terminal 1A or 1B • Open or short circuit in CKP sensor harnesses If CKP sensor and harness are okay, go to next step.
16	Visually inspect CKP sensor and teeth of crankshaft pulley. Are CKP sensor and teeth of crankshaft pulley okay?	Yes	Go to next step.
		No	Replace malfunctioning parts.
17	Measure gap between CKP sensor and teeth of crankshaft pulley. **Specification** **0.5—1.9 mm {0.020—0.075 in}** Is gap within specification?	Yes	Go to next step.
		No	Adjust CKP sensor.
18	Inspect for cranks on high-tension leads. Is there any crank on high-tension leads?	Yes	Repair suspected high-tension leads.
		No	Go to next step.
19	Is strong blue spark visible at each disconnected high-tension lead while cranking engine?	Yes	Go to next step.
		No	Inspect for following: • Open or short circuit in ignition coil • Open circuit in high-tension leads • Open circuit between ignition coil connector GND terminal and GND • Open circuit between ignition switch and ignition coil • Open circuit between ignition coil and PCM terminal 1A or 1B
20	Inspect spark plug conditions. Is spark plug wet, covered with carbon or grayish white?	Yes	**Spark plug is wet or covered with carbon:** Inspect for fuel leakage from injector. **Spark plug is grayish white:** Inspect for clogged fuel injector.
		No	Install spark plugs on original cylinders. Go to next step.
21	Remove and shake PCV valve. Does PCV valve rattle?	Yes	Go to next step.
		No	Replace PCV valve.
22	Inspect for restriction in exhaust system.	Yes	Inspect exhaust system.
		No	Go to next step.
23	Install fuel pressure gauge between fuel pipe and fuel distributor. Connect a jumper wire between F/P terminal at DLC-2 in engine compartment and GND. Turn ignition switch to ON position. Is fuel line pressure correct when ignition switch is turned on/off **five times**? (See F–20 FUEL LINE PRESSURE INSPECTION)	Yes	Go to next step.
		No	**Zero or low:** Inspect for clogged fuel line. If okay, replace fuel pump unit. **High:** Replace fuel pump unit.
24	Visually inspect for fuel leakage at fuel injector O-ring and fuel line. Service as necessary. Is fuel line pressure held after ignition switch is turned off? (See F–20 FUEL LINE PRESSURE INSPECTION)	Yes	Go to next step.
		No	Inspect fuel injector. If fuel injector is okay, replace fuel pump unit.
25	Disconnect vacuum hose between purge solenoid valve and intake manifold from purge solenoid valve side. Plug opening end of vacuum hose. Attempt to start engine. Is starting condition improved?	Yes	Inspect if purge solenoid valve sticks open mechanically. Inspect evaporative emission control system.
		No	Go to next step.

STEP	INSPECTION	RESULTS	ACTION
26	Is air leakage felt or heard at intake-air system components while racing engine to higher speed?	Yes	Repair or replace.
		No	Go to next step.
27	Inspect engine condition while tapping EGR valve housing. Is engine condition improved?	Yes	Replace EGR valve.
		No	Go to next step.
28	**Note** • The following test should be performed for vehicles with variable valve timing control system. Go to next step for vehicles without variable valve timing control system. Inspect variable valve timing control system operation. (See F–239 Variable Valve Timing Control System Operation Inspection.) Does variable valve timing control work properly?	Yes	Go to next step.
		No	Repair or replace malfunctioning parts.
29	Is engine compression correct?	Yes	Inspect valve timing.
		No	Inspect for causes.
30	Verify test results. • If okay, return to diagnostic index to service any additional symptoms. • If malfunction remains, replace PCM.		

NO.7 SLOW RETURN TO IDLE

A6E398018881W09

7	SLOW RETURN TO IDLE
DESCRIPTION	Engine takes more time than normal to return to idle speed.
POSSIBLE CAUSE	• ECT sensor malfunction • Thermostat is stuck open. • Throttle body malfunction • Air leakage from intake-air system

Diagnostic procedure

STEP	INSPECTION	RESULTS	ACTION
1	Connect WDS or equivalent to DLC-2. Retrieve any continuous memory, KOEO and KOER DTCs. Are there DTCs displayed?	Yes	**DTC is displayed:** Go to appropriate DTC test.
		No	**No DTC is displayed:** Go to next step.
2	Remove thermostat and inspect operation. (See E–7 THERMOSTAT REMOVAL/INSTALLATION.) (See E–8 THERMOSTAT INSPECTION.) Is thermostat okay?	Yes	ECT and thermostat are okay. Go to next step.
		No	Access ECT PID on WDS or equivalent. Inspect for both ECT PID and temperature gauge on instrument cluster readings. If temperature gauge on instrument cluster indicates normal range but ECT PID is not same as temperature gauge reading, inspect ECT sensor. If temperature gauge on instrument cluster indicates cold range but ECT PID is normal, inspect temperature gauge and heat gauge unit.
3	Is throttle body free of contaminations?	Yes	Inspect for air leakage from intake-air system components while racing engine to higher speed.
		No	Clean or replace throttle body.
4	Verify test results. • If okay, return to diagnostic index to service any additional symptoms. • If malfunction remains, replace PCM.		

NO.8 ENGINE RUNS ROUGH/ROLLING IDLE

A6E398018881W10

8	ENGINE RUNS ROUGH/ROLLING IDLE
DESCRIPTION	• Engine speed fluctuates between specified idle speed and lower speed and engine shakes excessively. • Idle speed is too slow and engine shakes excessively.
POSSIBLE CAUSE	• Air leakage from intake-air system parts • A/C system operation is improper • Spark leakage from high-tension leads • Spark plug malfunction • Purge solenoid valve malfunction • IAC valve improper operation • EGR valve malfunction • Erratic or no signal from CMP sensor • Low engine compression • Improper valve timing • Improper variable valve timing control system operation (L3-VE) • Erratic signal from CKP sensor • Poor fuel quality • PCV valve malfunction • Air cleaner restriction • Restriction in exhaust system • Disconnected electrical connectors • Inadequate fuel pressure • Fuel pump body mechanical malfunction • Improper load signal input • Fuel line restriction or clogging • Improper fuel injection control operation • Fuel leakage from fuel injector • Fuel injector clogging • Engine overheating • Vacuum leakage • Pressure regurator malfunction **Warning** **The following troubleshooting flow chart contains fuel system diagnosis and repair procedures. Read following warnings before performing the fuel system services:** • **Fuel vapor is hazardous. It can easily ignite, causing serious injury and damage. Always keep sparks and flames away from fuel.** • **Fuel line spills and leakage are dangerous. Fuel can ignite and cause serious injuries or death and damage. Fuel can also irritate skin and eyes. To prevent this, always complete "BEFORE REPAIR PROCEDURE" and "AFTER REPAIR PROCEDURE" described in this manual.** **(See F–17 BEFORE REPAIR PROCEDURE.)** **(See F–17 AFTER REPAIR PROCEDURE.)** **Caution** • **Disconnecting/connecting quick release connector without cleaning it may possibly cause damage to fuel pipe and quick release connector. Always clean quick release connector joint area before disconnecting/connecting, and make sure that it is free of foreign material.**

Diagnostic procedure

STEP	INSPECTION	RESULTS	ACTION
1	Verify following: • External fuel shut off or accessory (kill switch, alarm etc.) • Fuel quality (e.g. proper octane, contamination, winter/summer blend) • No air leakage from intake-air system • Proper sealing of intake manifold and components attached to intake manifold: EGR valve, IAC valve • Ignition wiring • Electrical connections • Fuses • Smooth operation of throttle valve Are all items okay?	Yes	Go to next step.
		No	Service as necessary. Repeat Step 1.

STEP	INSPECTION	RESULTS	ACTION
2	Connect WDS or equivalent to DLC-2. Retrieve any continuous memory, KOEO and KOER. Are there any DTCs displayed?	Yes	**DTC is displayed:** Go to appropriate DTC test.
		No	**No DTC is displayed:** Go to next step.
3	Is engine overheating?	Yes	Go to symptom troubleshooting "No.17 Cooling system concerns - Overheating".
		No	Go to next step.
4	**Note** • Following test is for engine running rough idle with A/C on concerns. If other symptoms exist, go to next step. Connect pressure gauge to A/C low and high pressure side lines. Start engine and run it at idle. Turn A/C switch on. Measure low side and high side pressures. Are pressures within specifications? (See U–12 REFRIGERANT PRESSURE CHECK.)	Yes	Go to next step.
		No	If A/C is always on, go to symptom troubleshooting "No.24 A/C is always on or A/C compressor runs continuously". For other symptoms, inspect following: • Refrigerant charging amount • Condenser fan operation
5	**Note** • Following test is for engine running rough with P/S on. If other symptoms exist, go to next step. Start engine and run it at idle. Access PSP PID. Inspect if PSP PID is on while turning steering wheel right to left. Is PSP PID okay?	Yes	Inspect power steering pressure switch operation and wiring harness between P/S pressure switch connector and PCM connector terminal 1Z.
		No	Go to next step.
6	Visually inspect CKP sensor and teeth of crankshaft pulley. Are CKP sensor and teeth of crankshaft pulley okay?	Yes	Go to next step.
		No	Replace malfunctioning parts.
7	Measure gap between CKP sensor and teeth of crankshaft pulley. **Specification** **0.5—1.5 mm {0.020—0.075 in}** Is gap within specification?	Yes	Go to next step.
		No	Adjust CKP sensor.
8	Inspect for cracks on high-tension leads. Are there any cracks on high-tension leads?	Yes	Repair suspected high-tension leads.
		No	Go to next step.
9	Inspect spark plug condition. Is spark plug wet, covered with carbon or grayish white?	Yes	**Spark plug is wet or covered with carbon:** Inspect for fuel leakage from injector. **Spark plug is grayish white:** Inspect for clogged fuel injector.
		No	Install spark plugs on original cylinders. Go to next step.
10	Start engine and disconnect IAC valve connector. Does rpm drop or engine stall?	Yes	Go to next step.
		No	Inspect IAC valve and wiring harness.
11	Install fuel pressure gauge between fuel pipe and fuel distributor. Start engine and run it at idle. Measure fuel line pressure at idle. Is fuel line pressure correct at idle? (See F–20 FUEL LINE PRESSURE INSPECTION)	Yes	Go to next step.
		No	**Zero or low:** Inspect for clogged fuel line. If okay, replace fuel pump unit. **High:** Replace fuel pump unit.
12	Visually inspect for fuel leakage at fuel injector, O-ring, and fuel line. Service as necessary. Does fuel line pressure hold after ignition switch is turned off? (See F–20 FUEL LINE PRESSURE INSPECTION)	Yes	Go to next step.
		No	Inspect fuel injector. If fuel injector is okay, replace fuel pump unit.

STEP	INSPECTION	RESULTS	ACTION
13	Connect WDS or equivalent to DLC-2. Start the engine and run it at idle. Access O2S11 PID. Is O2S11 PID okay? • **More than 0.45 V** when accelerator pedal is suddenly depressed: rich condition • **Less than 0.45 V** during fuel cut: lean condition	Yes	Go to next step.
		No	Inspect and repair or replace faulty HO2S, harness, connector or terminal, then go to next step.
14	Disconnect vacuum hose between purge solenoid valve and intake manifold from purge solenoid valve side. Plug opening end of vacuum hose. Start engine. Does engine condition improve?	Yes	Inspect if purge solenoid valve sticks open mechanically. Inspect EVAP control system.
		No	Go to next step.
15	Remove and shake PCV valve. Does PCV valve rattle?	Yes	Go to next step.
		No	Replace PCV valve.
16	Inspect for restriction in exhaust system. Is there any restriction?	Yes	Inspect exhaust system.
		No	Go to next step.
17	Visually inspect CMP sensor and teeth of camshaft. Are CMP sensor and teeth of camshaft okay?	Yes	Go to next step.
		No	Replace malfunctioning parts.
18	Inspect engine condition while tapping EGR valve housing. Does engine condition improve?	Yes	Replace EGR valve.
		No	Go to next step.
19	**Note** • The following test should be performed for vehicles with variable valve timing control system. Go to next step for vehicles witout variable valve timing control system. Inspect variable valve timing control system operation. (See F–239 Variable Valve Timing Control System Operation Inspection.) Does variable valve timing control system work properly?	Yes	Go to next step.
		No	Repair or replace malfunctioning parts.
20	Is engine compression correct?	Yes	Inspect valve timing.
		No	Inspect for causes.
21	Verify test results. • If okay, return to diagnostic index to service any additional symptoms. • If malfunction remains, replace PCM.		

NO.9 FAST IDLE/RUNS ON

A6E398018881W11

9	FAST IDLE/RUNS ON
DESCRIPTION	• Engine speed continues at fast idle after warm-up. • Engine runs after ignition switch is turned off.
POSSIBLE CAUSE	• ECT sensor malfunction • Air leakage from intake-air system • Throttle body malfunction • Accelerator cable free play misadjustment • Cruise control cable misadjustment • Improper load signal input

Diagnostic procedure

STEP	INSPECTION	RESULTS	ACTION
1	Connect WDS or equivalent to DLC-2. Access ECT PID. Start and warm up engine to normal operating temperature. Is ECT PID reading between **82—112°C {180—234°F}**?	Yes	Go to next step.
		No	**ECT PID is higher than 112°C {234°F}:** Go to symptom troubleshooting "No.17 Cooling system concerns - Overheating". **ECT PID is less than 82°C {180°F}:** Go to symptom troubleshooting "No.18 Cooling system concerns - Runs cold".

STEP	INSPECTION	RESULTS	ACTION
2	Connect WDS or equivalent to DLC-2. Retrieve any continuous memory DTCs. Are there any DTCs displayed?	Yes	**DTC is displayed:** Go to appropriate DTC test.
		No	**No DTC is displayed:** Go to next step.
3	Connect WDS or equivalent to DLC-2. Access ACSW, COLP, CPP, CPP/PNP, TR and PSP PIDs. Monitor each PID. (See F–45 PCM INSPECTION.) Are PIDs okay?	Yes	Go to next step.
		No	ACSW PID: Inspect A/C switch, refrigerant pressure switch and fan switch. COLP PID: Inspect refrigerant pressure switch (middle pressure). CPP PID: Inspect clutch switch (MTX). CPP/PNP PID: Inspect neutral switch (MTX) TR PID: TR switch (ATX). PSP PID: Inspect P/S pressure switch.
4	Is there air leakage felt or heard at intake-air system components while racing engine to higher speed?	Yes	Repair or replace parts if necessary.
		No	Verify accelerator cable free play. (See F–16 ACCELERATOR CABLE INSPECTION/ADJUSTMENT.)
5	Verify test results. • If okay, return to diagnostic index to service any additional symptoms. • If malfunction remains, replace PCM.		

NO.10 LOW IDLE/STALLS DURING DECELERATION

A6E398018881W12

10	LOW IDLE/STALLS DURING DECELERATION
DESCRIPTION	• Engine stops unexpectedly at beginning of deceleration or recovery from deceleration.
POSSIBLE CAUSE	• Vacuum leakage • IAC valve malfunction • Air leakage from intake-air system • Improper air/fuel mixture ratio control • Evaporative emission control system malfunction • TP sensor misadjustment • TP sensor or related circuit malfunction • MAF sensor or related circuit malfunction • Brake switch or related circuit malfunction • Neutral/clutch switch or related circuit malfunction (MTX) • TR switch or related circuit malfunction (ATX) • Improper A/C magnetic clutch operation

Diagnostic procedure

STEP	INSPECTION	RESULTS	ACTION
1	• Does engine idle rough?	Yes	Go to symptom troubleshooting "No.8 Engine runs rough/rolling idle".
		No	Go to next step.
2	Turn off A/C switch and fan switch. Does A/C magnetic clutch engauge?	Yes	Go to symptom troubleshooting “No.24 A/C is always on or A/C compressor runs continuously.“
		No	Go to next step.
3	Verify following: • Proper routing and no damage of vacuum lines • IAC valve is connected properly. • No air leakage from intake-air system Are all items okay?	Yes	Go to next step.
		No	Service as necessary. Repeat Step 3.
4	Connect WDS or equivalent to DLC-2. Retrieve any continuous memory, KOEO and KOER DTCs. Are there any DTCs displayed?	Yes	**DTC is displayed:** Go to appropriate DTC test.
		No	**No DTC is displayed:** Go to next step.
5	Does idle speed drop or stall when disconnecting IAC valve?	Yes	Go to next step.
		No	Inspect following: • Circuit from IAC valve to PCM connector terminal 4G or 4J for open and short • IAC valve for sticking If okay, go to next step.

STEP	INSPECTION	RESULTS	ACTION
6	Disconnect vacuum hose between purge solenoid valve and intake manifold from purge solenoid valve side. Plug opening end of vacuum hose. Drive vehicle. Does engine condition improve?	Yes	Inspect evaporative emission control system.
		No	Go to next step.
7	Connect WDS or equivalent to DLC-2. Access TP, MAF, VSS, BOO, CPP, CPP/PNP and TR PIDs. Monitor each PID while driving vehicle. (See F–45 PCM INSPECTION.) Are PIDs okay?	Yes	Intermittent concern exists. (See INTERMITTENT CONCERN TROUBLESHOOTING.)
		No	**TP PID:** Inspect TP sensor. **MAF PID:** Inspect MAF sensor. **VSS PID:** Inspect VSS. **BOO PID:** Inspect brake switch. **CPP PID:** Inspect clutch switch (MTX). **CPP/PNP PID:** Inspect neutral switch (MTX). **TR PID:** Inspect TR switch (ATX) switch.
8	Verify test results. • If okay, return to diagnostic index to service any additional symptoms. • If malfunction remains, replace PCM.		

F

NO.11 ENGINE STALLS/QUITS, ENGINE RUNS ROUGH, MISSES, BUCK/JERK, HESITATION/STUMBLE, SURGES

A6E398018881W13

11	**ENGINE STALLS/QUITS — ACCELERATION/CRUISE** **ENGINE RUNS ROUGH — ACCELERATION/CRUISE** **MISSES — ACCELERATION/CRUISE** **BUCK/JERK — ACCELERATION/CRUISE/DECELERATION** **HESITATION/STUMBLE — ACCELERATION** **SURGES — ACCELERATION/CRUISE**
DESCRIPTION	• Engine stops unexpectedly at beginning of acceleration or during acceleration. • Engine stops unexpectedly while cruising. • Engine speed fluctuates during acceleration or cruising. • Engine misses during acceleration or cruising. • Vehicle bucks/jerks during acceleration, cruising, or deceleration. • Momentary pause at beginning of acceleration or during acceleration • Momentary minor irregularity in engine output
POSSIBLE CAUSE	• A/C system operation is improper. • Erratic signal or no signal from CMP sensor • Air leakage from intake-air system parts • Purge solenoid valve malfunction • IAC valve improper operation • EGR valve malfunction • Erratic signal from CKP sensor • Low engine compression • Vacuum leakage • Poor fuel quality • Main relay intermittent malfunction • Throttle body malfunction • Engine overheating • Spark plug malfunction • Improper air/fuel mixture ratio control operation • Improper VTCS operation • Spark leakage from high-tension leads • Air cleaner restriction • PCV valve malfunction • Improper valve timing due to jumping out timing belt • Restriction in exhaust system • Intermittent open or short in fuel body pump circuit • Inadequate fuel pressure • Fuel pump mechanical malfunction • Fuel leakage from fuel injector • Fuel injector clogging • Fuel line restriction or clogging • Pressure regulator malfunction • TP sensor misadjustment • Intermittent open or short of MAF sensor, TP sensor and VSS • ATX malfunction (ATX) • Clutch slippage (MTX) • Improper VTCS operation **Warning** **The following troubleshooting flow chart contains the fuel system diagnosis and repair procedures. Read the following warnings before performing the fuel system services:** • **Fuel vapor is hazardous. It can easily ignite, causing serious injury and damage. Always keep sparks and flames away from fuel.** • **Fuel line spills and leakage are dangerous. Fuel can ignite and cause serious injuries or death and damage. Fuel can also irritate skin and eyes. To prevent this, always complete "BEFORE REPAIR PROCEDURE" and "AFTER REPAIR PROCEDURE" described in this manual.** **(See F–17 BEFORE REPAIR PROCEDURE.)** **(See F–17 AFTER REPAIR PROCEDURE.)** **Caution** • **Disconnecting/connecting quick release connector without cleaning it may possibly cause damage to fuel pipe and quick release connector. Always clean quick release connector joint area before disconnecting/connecting, and make sure that it is free of foreign material.**

Diagnostic procedure

STEP	INSPECTION	RESULTS	ACTION
1	Verify for following: • Vacuum connection • Air cleaner element • No air leakage from intake-air system • No restriction of intake-air system • Proper sealing of intake manifold and components attached to intake manifold: such as EGR valve, IAC valve • Ignition wiring • Fuel quality (e.g. proper octane, contamination, winter/summer blend) • Electrical connections • Smooth operation of throttle valve Are all items okay?	Yes	Go to next step.
		No	Service as necessary. Repeat Step 1.
2	Connect WDS or equivalent to DLC-2. Retrieve any continuous memory, KOEO and KOER DTCs. If stall, condition exists retrieve continuous memory and KOEO DTCs. Are there any DTCs displayed?	Yes	**DTC is displayed:** Go to appropriate DTC test.
		No	**No DTC is displayed:** Go to next step.
3	Is engine overheating?	Yes	Go to symptom troubleshooting "No.17 Cooling system concerns - Overheating".
		No	Go to next step.
4	Connect WDS or equivalent to DLC-2. Access RPM, VPWR, MAF, TP and VSS PIDs. Drive vehicle with monitoring PIDs. Are PIDs within specifications? (See F–45 PCM INSPECTION.)	Yes	Go to next step.
		No	**RPM PID:** Inspect CKP sensor and related harness for such as vibration, intermittent open/short circuit. **VPWR PID:** Inspect for open circuit intermittently. **MAF PID:** Inspect for open circuit of MAF sensor and related wire harness intermittently. **TP PID:** Inspect if output signal from TP sensor changes smoothly. **VSS PID:** Inspect for open circuit of VSS and related wire harness intermittently.
5	Visually inspect CKP sensor and teeth of crankshaft pulley. Are CKP sensor and teeth of crankshaft pulley okay?	Yes	Go to next step.
		No	Replace malfunctioning parts.
6	Measure gap between CKP sensor and teeth of crankshaft pulley. **Specification** **0.5—1.9 mm {0.020—0.075 in}** Is gap within specification?	Yes	Go to next step.
		No	Adjust CKP sensor.
7	Inspect spark plug conditions. Is spark plug wet, covered with carbon or grayish white?	Yes	**Spark plug is wet or covered with carbon:** Inspect for fuel leakage from fuel injector. **Spark plug is grayish white:** Inspect for clogged fuel injector.
		No	Install spark plugs on original cylinders. Go to next step.
8	Remove and shake PCV valve. Does PCV valve rattle?	Yes	Go to next step.
		No	Replace PCV valve.
9	Verify that throttle lever is resting on throttle valve stop screw and/or throttle valve orifice plug. Is lever in correct position?	Yes	Go to next step.
		No	Adjust if necessary.
10	Inspect for restriction in the exhaust system. Is there any restriction?	Yes	Inspect exhaust system.
		No	Go to next step.

F

STEP	INSPECTION	RESULTS	ACTION
11	Install fuel pressure gauge between fuel pipe and fuel distributor. Connect jumper wire between F/P terminal at DLC-2 in engine compartment and GND. Turn ignition switch to ON position. Is fuel line pressure correct with ignition switch to ON position? (See F–20 FUEL LINE PRESSURE INSPECTION)	Yes	Go to next step.
		No	**Zero or low:** Inspect for clogged fuel line. If okay, replace fuel pump unit. **High:** Replace fuel pump unit.
12	Visually inspect for fuel leakage at fuel injector O-ring and fuel line. Service as necessary. Is fuel line pressure held after ignition switch is turned off? (See F–20 FUEL LINE PRESSURE INSPECTION)	Yes	Go to next step.
		No	Inspect fuel injector. If fuel injector is okay, replace fuel pump unit.
13	**Note** • Following test is for engine stalling with A/C on. If other symptom exists, go to next step. Connect a pressure gauge to A/C low and high pressure side lines. Turn A/C on and measure low side and high side pressure. Are pressure within specifications? (See U–12 REFRIGERANT PRESSURE CHECK.)	Yes	Go to next step.
		No	If A/C is always on, go to symptom troubleshooting "No.24 A/C is always on or A/C compressor runs continuously". For other symptoms, inspect following: • Refrigerant charging amount • Condenser fan operation
14	**Note** • The following test should be performed for symptom with cruise control ON. If other symptoms exist, go to next step. Inspect cruise control system. Is cruise control system okay?	Yes	Go to next step.
		No	Repair or replace malfunctioning parts.
15	Disconnect vacuum hose between purge solenoid valve and intake manifold from purge solenoid valve side. Plug opening end of vacuum hose. Drive vehicle. Does engine condition improve?	Yes	Go to next step. Inspect if purge solenoid valve sticks open mechanically. Inspect evaporative emission control system.
		No	Go to next step.
16	Visually inspect CMP sensor and projections of camshaft pulley. Are CMP sensor and projections of camshaft pulley okay?	Yes	Go to next step.
		No	Replace malfunctioning parts.
17	Inspect VTCS operation. (See F–231 Variable Tumble Control System (VTCS) Operation Inspection.) Is VTCS okay?	Yes	Go to next step.
		No	Replace or replace malfunctioning parts.
18	Inspect EGR system. (See F–233 EGR Control System Inspection.) Is EGR system okay?	Yes	Go to next step.
		No	Replace malfunctioning parts.
19	Is engine compression correct?	Yes	Inspect following: • Valve timing • Internal transaxle part (ATX) • Clutch (MTX)
		No	Inspect for cause.
20	Verify test results. • If okay, return to diagnostic index to service any additional symptoms. • If malfunction remains, replace PCM.		

NO.12 LACK/LOSS OF POWER-ACCELERATION/CRUISE

A6E398018881W14

12	LACK/LOSS OF POWER — ACCELERATION/CRUISE
DESCRIPTION	Performance is poor under load (e.g., power down when climbing hills).
POSSIBLE CAUSE	• Improper A/C system operation • Erratic signal or no signal from CMP sensor • Air leakage from intake-air system parts • Improper VIS operation (if equipped) • Improper VTCS operation • Purge control solenoid malfunction • EGR valve malfunction • Brake dragging • Erratic signal from CKP sensor • Low engine compression • Vacuum leakage • Poor fuel quality • Spark leakage from high-tension leads • Engine overheating • Throttle body malfunction • Spark plug malfunction • Air cleaner restriction • PCV valve malfunction • Improper valve timing due to jumping out of timing belt • Improper variable valve timing control operation (if equipped) • Restriction in exhaust system • Intermittent open or short in fuel pump related circuit • Inadequate fuel pressure • Fuel pump mechanical malfunction • Fuel line restriction or clogging • Fuel leakage from fuel injector • Fuel injector clogging • Intermittent open or short of MAF sensor, TP sensor and VSS • ATX malfunction (ATX) • Clutch slippage (MTX) **Warning** **The following troubleshooting flow chart contains the fuel system diagnosis and repair procedures. Read the following warnings before performing the fuel system services:** • **Fuel vapor is hazardous. It can easily ignite, causing serious injury and damage. Always keep sparks and flames away from fuel.** • **Fuel line spills and leakage are dangerous. Fuel can ignite and cause serious injuries or death and damage. Fuel can also irritate skin and eyes. To prevent this, always complete "BEFORE REPAIR PROCEDURE" and "AFTER REPAIR PROCEDURE" described in this manual.** **(See F–17 BEFORE REPAIR PROCEDURE.)** **(See F–17 AFTER REPAIR PROCEDURE.)** **Caution** • **Disconnecting/connecting quick release connector without cleaning it may possibly cause damage to fuel pipe and quick release connector. Always clean quick release connector joint area before disconnecting/connecting, and make sure that it is free of foreign material.**

Diagnostic procedure

STEP	INSPECTION	RESULTS	ACTION
1	Verify following: • Vacuum connection • Air cleaner element • No air leakage from intake-air system • No restriction of intake-air system • Proper sealing of intake manifold and components attached to intake manifold; such as EGR valve, IAC valve • Fuel quality (e.g. proper octane, contamination, winter/summer blend) Are all items okay?	Yes	Go to next step.
		No	Service as necessary. Repeat Step 1.

STEP	INSPECTION	RESULTS	ACTION
2	Connect WDS or equivalent to DLC-2. Retrieve any continuous memory, KOEO and KOER DTCs. If engine stall condition exists, retrieve continuous memory and KOEO DTCs. Are there any DTCs displayed?	Yes	**DTC is displayed:** Go to appropriate DTC test.
		No	**No DTC is displayed:** Go to next step.
3	Is engine overheating?	Yes	Go to symptom troubleshooting "No.17 Cooling system concerns - Overheating".
		No	Go to next step.
4	Connect WDS or equivalent to DLC-2. Access RPM, MAF, TP and VSS PIDs. Drive vehicle while monitoring PIDs. Are PIDs within specifications? (See F–45 PCM INSPECTION.)	Yes	Go to next step.
		No	**RPM PID:** Inspect CKP sensor and related wiring harness for vibration and/or intermittent open/short circuit. **MAF PID:** Inspect for intermittent open circuit of MAF sensor and related wiring harness. **TP PID:** Inspect if TP sensor output increases smoothly. **VSS PID:** Inspect for intermittent open circuit of VSS and related wiring harness.
5	Visually inspect CKP sensor and teeth of crankshaft pulley. Are CKP sensor and teeth of crankshaft pulley okay?	Yes	Go to next step.
		No	Replace malfunctioning parts.
6	Measure gap between CKP sensor and teeth of crankshaft pulley. **Specification** **0.5—1.9 mm {0.020—0.075 in}** Is gap within specification?	Yes	Go to next step.
		No	Adjust CKP sensor.
7	Inspect spark plug condition. Is spark plug wet, covered with carbon or grayish white?	Yes	**Spark plug is wet or covered with carbon:** Inspect for fuel leakage from fuel injector. **Spark plug is grayish white:** Inspect for clogged fuel injector.
		No	Install spark plugs on original cylinders. Go to next step.
8	Remove and shake PCV valve. Does PCV valve rattle?	Yes	Go to next step.
		No	Replace PCV valve.
9	Inspect for restriction in exhaust system. Is there any restriction?	Yes	Inspect exhaust system.
		No	Go to next step.
10	Install fuel pressure gauge between fuel pipe and fuel distributor. Connect jumper wire between F/P terminal at DLC-2 in engine compartment and GND. Turn ignition switch to ON position. Is fuel line pressure correct with ignition switch to ON position? (See F–20 FUEL LINE PRESSURE INSPECTION)	Yes	Go to next step.
		No	**Zero or low:** Inspect for clogged fuel line. If okay, replace fuel pump unit. **High:** Replace fuel pump unit.
11	Inspect VTCS operation. (See F–231 Variable Tumble Control System (VTCS) Operation Inspection.) Does VTCS work properly?	Yes	Go to next step.
		No	Repair or replace malfunctioning parts.
12	**Note** • The following test should be performed for vehicles with VIS. Go to next step for vehicles without VIS. Inspect VIS operation. (See F–230 VIS Operation Inspection.) Does VIS work properly?	Yes	Go to next step.
		No	Repair or replace malfunctioning parts.

STEP	INSPECTION	RESULTS	ACTION
13	**Note** • Following test is for engine stalling with A/C on concern. If other symptoms exist, go to next step. Connect pressure gauge to A/C low and high side pressure lines. Turn A/C on and measure low side and high side pressures. Are pressures within specifications? (See U–12 REFRIGERANT PRESSURE CHECK.)	Yes	Go to next step.
		No	If A/C is always on, go to symptom troubleshooting "No.24 A/C is always on or A/C compressor runs continuously". For other symptoms, inspect following: • Refrigerant charging amount • Condenser fan operation
14	Inspect for A/C cut-off operation. (See F–234 A/C Cut-off Control System Inspection.) Does A/C cut-off work properly?	Yes	Go to next step.
		No	Inspect A/C cut-off system components.
15	Disconnect vacuum hose between purge solenoid valve and intake manifold from purge solenoid valve side. Plug opening end of vacuum hose. Drive vehicle. Does engine condition improve?	Yes	Inspect if purge solenoid valve is sticks open mechanically. Inspect evaporative emission control system.
		No	Go to next step.
16	Visually inspect CMP sensor and projections of camshaft pulley. Are CMP sensor and projections of camshaft pulley okay?	Yes	Go to next step.
		No	Replace malfunctioning parts.
17	Inspect EGR system. (See F–233 EGR Control System Inspection.) Is EGR system okay?	Yes	Go to next step.
		No	Replace malfunctioning parts.
18	**Note** • The following test should be performed for vehicles with variable valve timing control system. Go to next step for vehicles without variable valve timing control system. Inspect variable valve timing control system operation. (See F–239 Variable Valve Timing Control System Operation Inspection.) Does variable valve timing control system work properly?	Yes	Go to next step.
		No	Repair or replace malfunctioning parts.
19	Is engine compression correct?	Yes	Inspect following: • Valve timing • Internal transaxle components (ATX) • Clutch (MTX) • Brake system for dragging
		No	Inspect for cause.
20	Verify test results. • If okay, return to diagnostic index to service any additional symptoms. • If malfunction remains, replace PCM.		

F

NO.13 KNOCKING/PINGING-ACCELERATION/CRUISE

A6E398018881W15

13	KNOCKING/PINGING - ACCELERATION/CRUISE
DESCRIPTION	Sound is produced when air/fuel mixture is ignited by something other than spark plug (e.g., hot spot in combustion chamber).
POSSIBLE CAUSE	• Engine overheating due to cooling system malfunction • ECT sensor malfunction • IAT sensor malfunction • MAF sensor malfunction • Knock sensor malfunction • Erratic signal from CMP sensor • Inadequate engine compression • Inadequate fuel pressure **Warning** **The following troubleshooting flow chart contains the fuel system diagnosis and repair procedures. Read the following warnings before performing the fuel system services:** • **Fuel vapor is hazardous. It can easily ignite, causing serious injury and damage. Always keep sparks and flames away from fuel.** • **Fuel line spills and leakage are dangerous. Fuel can ignite and cause serious injuries or death and damage. Fuel can also irritate skin and eyes. To prevent this, always complete "BEFORE REPAIR PROCEDURE" and "AFTER REPAIR PROCEDURE" described in this manual.** **(See F–17 BEFORE REPAIR PROCEDURE.)** **(See F–17 AFTER REPAIR PROCEDURE.)** **Caution** • **Disconnecting/connecting quick release connector without cleaning it may possibly cause damage to fuel pipe and quick release connector. Always clean quick release connector joint area before disconnecting/connecting, and make sure that it is free of foreign material.**

Diagnostic procedure

STEP	INSPECTION	RESULTS	ACTION
1	Connect WDS or equivalent to DLC-2. Access ECT PID. Verify ECT PID is **less than 116°C {241°F}** during driving. Is ECT PID less than specification?	Yes	Go to next step.
		No	Inspect cooling system for cause of overheating.
2	Connect WDS or equivalent to DLC-2. Access IAT, MAF and SPARKADV PIDs. Monitor each PID. (See F–45 PCM INSPECTION.) Are PIDs okay?	Yes	Go to next step.
		No	**IAT PID**: Inspect IAT sensor **MAF PID**: Inspect MAF sensor **SPARKADV PID**: Inspect CMP sensor and knock sensor.
3	Connect WDS or equivalent to DLC-2. Retrieve any continuous memory, KOEO and KOER DTCs. Are there any DTCs displayed?	Yes	**DTC is displayed:** Go to appropriate DTC test.
		No	**No DTC is displayed:** Go to next step.
4	Is engine compression correct?	Yes	Go to next step.
		No	Inspect for cause.
5	Install fuel pressure gauge between fuel pipe and fuel distributor. Start engine and run it at idle. Measure fuel line pressure at idle. Is fuel line pressure correct at idle? (See F–20 FUEL LINE PRESSURE INSPECTION)	Yes	Inspect ignition timing.
		No	**Zero or low:** Inspect for clogged fuel line. If okay, replace fuel pump unit. **High:** Replace fuel pump unit.
6	Verify test results. • If okay, return to diagnostic index to service any additional symptoms. • If malfunction remains, replace PCM.		

NO.14 POOR FUEL ECONOMY

A6E398018881W16

14	POOR FUEL ECONOMY
DESCRIPTION	Fuel economy is unsatisfactory.
POSSIBLE CAUSE	• Contaminated air cleaner element • VIS malfunction (if equipped) • Engine cooling system malfunction • Improper ATF level (ATX) • Weak spark • Poor fuel quality • Erratic or no signal from CMP sensor • Clutch slippage (MTX) • VTCS malfunction • Improper variable valve timing control system operation (if equipped) • Improper coolant level • Inadequate fuel pressure • Spark plug malfunction • PCV valve malfunction • Brake dragging • Improper valve timing due to jumping out of timing belt • Contaminated MAF sensor • Improper engine compression • Exhaust system clogging **Warning** **The following troubleshooting flow chart contains fuel system diagnosis and repair procedures. Read following warnings before performing fuel system services:** • **Fuel vapor is hazardous. It can easily ignite, causing serious injury and damage. Always keep sparks and flames away from fuel.** • **Fuel line spills and leakage are dangerous. Fuel can ignite and cause serious injuries or death and damage. Fuel can also irritate skin and eyes. To prevent this, always complete "BEFORE REPAIR PROCEDURE" and "AFTER REPAIR PROCEDURE" described in this manual.** **(See F–17 BEFORE REPAIR PROCEDURE.)** **(See F–17 AFTER REPAIR PROCEDURE.)** **Caution** • **Disconnecting/connecting quick release connector without cleaning it may possibly cause damage to fuel pipe and quick release connector. Always clean quick release connector joint area before disconnecting/connecting, and make sure that it is free of foreign material.**

Diagnostic procedure

STEP	INSPECTION	RESULTS	ACTION
1	Inspect for following: • Air cleaner element for contamination • ATF level • Fuel quality • Coolant level • Brake dragging • Clutch slippage Are all items okay?	Yes	Go to next step.
		No	Service as necessary. Repeat Step 1.
2	Connect WDS or equivalent to DLC-2. Retrieve any continuous memory, KOEO and KOER DTCs. Are there any DTCs displayed?	Yes	**DTC is displayed:** Go to appropriate DTC test.
		No	**No DTC is displayed:** Go to next step.
3	Access ECT PID. Drive vehicle while monitoring PID. (See F–45 PCM INSPECTION.) Is PID within specification?	Yes	Go to next step.
		No	Inspect for coolant leakage, cooling fan and condenser fan operations or thermostat operation.

STEP	INSPECTION	RESULTS	ACTION
4	Is strong blue spark visible at each disconnected high-tension lead while cranking engine?	Yes	Inspect for following: • Spark plugs malfunction • CMP sensor is improperly installed. • Trigger wheel damage on camshaft • Open or short circuit on CMP sensor • Open or short circuit between CMP sensor and PCM terminal 2J or 2M Repair or replace malfunctioning parts. If okay, go to next step.
		No	Inspect following: • High-tension leads • Ignition coil and connector
5	Install fuel pressure gauge between fuel pipe and fuel distributor. Start engine and run it at idle. Measure fuel line pressure at idle. Is fuel line pressure correct at idle? (See F–20 FUEL LINE PRESSURE INSPECTION)	Yes	Go to next step.
		No	**Zero or low:** Inspect for clogged fuel line. If okay, replace fuel pump unit **High:** Replace fuel pump unit.
6	Inspect for VTCS operation. (See F–231 Variable Tumble Control System (VTCS) Operation Inspection.) Does VTCS work properly?	Yes	Go to next step.
		No	Repair or replace malfunctioning parts.
7	**Note** • The following test should be performed for vehicles with variable valve timing control system. Go to next step for vehicles without variable valve timing control system. Inspect for variable valve timing control system operation. (See F–239 Variable Valve Timing Control System Operation Inspection.) Does variable valve timing control system work properly?	Yes	Go to next step.
		No	Repair or replace malfunctioning parts.
8	**Note** • The following test should be performed for vehicles with VIS. Go to next step for vehicles without VIS. Inspect for VIS operation. (See F–230 VIS Operation Inspection.) Does VIS work properly?	Yes	Go to next step.
		No	Repair or replace malfunctioning parts.
9	Remove and shake PCV valve. Does PCV valve rattle?	Yes	Go to next step.
		No	Replace PCV valve.
10	Inspect for restriction in the exhaust system. Is there any restriction?	Yes	Inspect exhaust system.
		No	Go to next step.
11	Inspect for contaminated MAF sensor. Is there any contamination?	Yes	Go to next step.
		No	Inspect for cause.
12	Inspect MAF sensor for contamination. Is there any contamination?	Yes	Replace MAF sensor.
		No	Go to next step.
13	Is engine compression correct?	Yes	Inspect valve timing.
		No	Inspect for cause.
14	Verify test results. • If okay, return to diagnostic index to service any additional symptoms. • If malfunction remains, replace PCM.		

NO.15 EMISSION COMPLIANCE

A6E398018881W17

15	EMISSION COMPLIANCE
DESCRIPTION	Fails emissions test.
POSSIBLE CAUSE	• Vacuum lines leakage or blockage • Cooling system malfunction • Spark plug malfunction • Leakage from intake manifold • Erratic or no signal from CMP sensor • Inadequate fuel pressure • PCV valve malfunction or incorrect valve installation • EGR valve malfunction • Exhaust system clogging • Fuel tank ventilation system malfunction • Charcoal canister damage • Air cleaner element clogging or restriction • Throttle body malfunction • Spark leakage from high-tension leads • Improper air/fuel mixture ratio control operation • Catalyst converter malfunction • Engine internal parts malfunction • Excessive carbon is built up in combustion chamber • Improper engine compression • Improper valve timing **Warning** **The following troubleshooting flow chart contains fuel system diagnosis and repair procedures. Read following warnings before performing fuel system services:** • **Fuel vapor is hazardous. It can easily ignite, causing serious injury and damage. Always keep sparks and flames away from fuel.** • **Fuel line spills and leakage are dangerous. Fuel can ignite and cause serious injuries or death and damage. Fuel can also irritate skin and eyes. To prevent this, always complete "BEFORE REPAIR PROCEDURE" and "AFTER REPAIR PROCEDURE" described in this manual.** **(See F–17 BEFORE REPAIR PROCEDURE.)** **(See F–17 AFTER REPAIR PROCEDURE.)** **Caution** • **Disconnecting/connecting quick release connector without cleaning it may possibly cause damage to fuel pipe and quick release connector. Always clean quick release connector joint area before disconnecting/connecting, and make sure that it is free of foreign material.**

Diagnostic procedure

STEP	INSPECTION	RESULTS	ACTION
1	Inspect for following: • Vacuum lines for leakage or blockage • Electrical connections • Proper maintenance schedule followed • Intake-air system and air cleaner element concerns: obstructions, leakage or dirtiness Are all items okay?	Yes	Go to next step.
		No	Service as necessary. Repeat Step 1.
2	Connect WDS or equivalent to DLC-2. Retrieve any continuous memory, KOEO and KOER DTCs. Are there any DTCs displayed?	Yes	**DTC is displayed:** Go to appropriate DTC test.
		No	**No DTC is displayed:** Go to next step.
3	Is any other drivability concern present?	Yes	Go to appropriate symptom troubleshooting.
		No	Go to next step.
4	Connect WDS or equivalent to DLC-2. Access ECT PID. Warm up engine and run it at idle. Verify ECT PID is correct. (See F–45 PCM INSPECTION.) Is ECT PID correct?	Yes	Go to next step.
		No	Inspect for coolant leakage, cooling fan and condenser fan operation or thermostat operation.

STEP	INSPECTION	RESULTS	ACTION
5	Is strong blue spark visible at each disconnected high-tension lead while cranking engine?	Yes	Inspect for following: • Spark plugs malfunction • Improperly installed CMP sensor • Damage of trigger wheel on camshaft • Open or short circuit on CMP sensor • Open or short circuit between CMP sensor and PCM terminal 2J or 2M Repair or replace malfunctioning parts. If okay, go to next step.
		No	Inspect following: • High-tension leads • Ignition coil and connector
6	Install fuel pressure gauge between fuel pipe and fuel distributor. Start engine and run it at idle. Measure fuel line pressure at idle. Is fuel line pressure correct at idle? (See F–20 FUEL LINE PRESSURE INSPECTION)	Yes	Go to next step.
		No	**Zero or low:** Inspect for clogged fuel line. If okay, replace fuel pump unit. **High:** Replace fuel pump unit.
7	Remove and shake PCV valve. Does PCV valve rattle?	Yes	Go to next step.
		No	Replace PCV valve.
8	Inspect for fuel saturation inside charcoal canister. Is excess amount of liquid fuel present in canister?	Yes	Replace charcoal canister.
		No	Inspect fuel tank vent system. Then, go to next step.
9	Is there restriction in exhaust system?	Yes	Inspect exhaust system.
		No	Inspect EGR system. (See F–233 EGR Control System Inspection.)
10	Inspect threeway catalytic converter. (See F–41 THREE-WAY CATALYTIC CONVERTER (TWC) INSPECTION.) Is threeway catalytic converter okay?	Yes	Inspect EGR system. (See F–233 EGR Control System Inspection.)
		No	Replace threeway catalytic converter.
11	Verify test results. • If okay, return to diagnostic index to service any additional symptoms. • If malfunction remains, replace PCM.		

NO.16 HIGH OIL CONSUMPTION/LEAKAGE

A6E398018881W18

16	HIGH OIL CONSUMPTION/LEAKAGE
DESCRIPTION	Oil consumption is excessive.
POSSIBLE CAUSE	• PCV valve malfunction • Improper dipstick • Improper engine oil viscosity • Engine internal parts malfunction

Diagnostic procedure

STEP	INSPECTION	RESULTS	ACTION
1	Remove and shake PCV valve. Does PCV valve rattle?	Yes	Go to next step.
		No	Replace PCV valve.
2	Inspect for following: • External leakage • Proper dipstick • Proper engine oil viscosity Are all items okay?	Yes	Inspect internal engine parts such as valves, valve guides, valve stem seals, cylinder head drain passage, and piston rings.
		No	Service as necessary. Repeat Step 2.
3	Verify test results. • If okay, return to diagnostic index to service any additional symptoms. • If malfunction remains, replace PCM.		

NO.17 COOLING SYSTEM CONCERNS-OVERHEATING

A6E398018881W19

17	COOLING SYSTEM CONCERNS -OVERHEATING
DESCRIPTION	Engine runs at higher than normal temperature/overheats.
POSSIBLE CAUSE	• Improper coolant level • Blown fuses • Coolant leakage • Excessive A/C system pressure • A/C system operation is improper • Improper water/anti-freeze mixture • Fans reverse rotation • Poor radiator condition • Thermostat malfunction • Radiator hoses damage • Condenser fan is inoperative. • Improper or damaged radiator cap • Cooling fan is inoperative. • Coolant overflow system malfunction • Improper tension of drive belt • Drive belt damage

F

Diagnostic procedure

STEP	INSPECTION	RESULTS	ACTION
1	Inspect following: • Engine coolant level • Coolant leakage • Water and anti-freeze mixture • Radiator condition • Collapsed or restricted radiator hoses • Radiator pressure cap • Overflow system • Fan rotational direction • Fuses Are all items okay?	Yes	Go to next step.
		No	Service as necessary. Repeat Step 1.
2	Connect WDS or equivalent to DLC-2. Retrieve any continuous memory, KOEO and KOER DTCs. Are there any DTCs displayed?	Yes	**DTC is displayed:** Go to appropriate DTC test.
		No	**No DTC is displayed:** Go to next step.
3	Start engine and run it at idle speed. Turn A/C switch on. Does A/C compressor engage?	Yes	Go to Step 5.
		No	Inspect for following and repair or replace as necessary: • Refrigerant charging amount • Open circuit between A/C relay and PCM terminal 4O • Seized A/C magnetic clutch • A/C magnetic clutch malfunction If all items are okay, go to next step.
4	Connect WDS or equivalent to DLC-2. Access ACSW PID. Start engine and run it at idle speed. Turn A/C switch on. Does ACSW PID read ON?	Yes	Go to next step.
		No	Inspect following: • Refrigerant pressure switch operation • A/C switch is stuck open. • Open or short circuit between refrigerant pressure switch and PCM terminal 1AC • Open circuit of blower motor fan switch and resistor (if blower motor does not operate) • Evaporator temperature sensor and A/C amplifier
5	Inspect cooling fan control system operation. (See F–234 Cooling Fan Control System Inspection.) Does cooling fan control system work properly?	Yes	Go to next step.
		No	Repair or replace malfunctioning parts.
6	Is drive belt okay?	Yes	Go to next step.
		No	Replace drive belt.
7	Is there any leakage around heater unit in passenger compartment?	Yes	Inspect and service heater for leakage.
		No	Go to next step.
8	Is there any leakage at coolant hoses and/or radiator?	Yes	Replace malfunctioning part.
		No	Go to next step.

STEP	INSPECTION	RESULTS	ACTION
9	Cool down the engine. Remove thermostat and inspect operation. (See E–7 THERMOSTAT REMOVAL/ INSTALLATION.) (See E–8 THERMOSTAT INSPECTION.) Is thermostat okay?	Yes	Engine coolant temperature and thermostat are okay, inspect engine block for leakage or blockage.
		No	Access ECT PID. Inspect for both ECT PID and temperature gauge readings. If temperature gauge on instrument cluster indicates normal range but ECT PID is not same as temperature gauge reading, inspect ECT sensor. If temperature gauge on instrument cluster indicates overheating but ECT PID is normal, inspect temperature gauge and heat gauge unit.
10	Verify test results. • If okay, return to diagnostic index to service any additional symptoms. • If malfunction remains, replace PCM.		

NO.18 COOLING SYSTEM CONCERNS-RUNS COLD

A6E398018881W20

18	COOLING SYSTEM CONCERNS -RUNS COLD
DESCRIPTION	Engine takes excessive period for reaching normal operating temperature.
POSSIBLE CAUSE	• Thermostat malfunction • Condenser fan system malfunction • Cooling fan system malfunction

Diagnostic procedure

STEP	INSPECTION	RESULTS	ACTION
1	Is customer complaint "Lack of passenger compartment heat" only?	Yes	Inspect A/C and heater system.
		No	Go to next step.
2	Does engine speed continue at fast idle?	Yes	Go to symptom troubleshooting "No.9 Fast idle/runs on".
		No	Go to next step.
3	Remove thermostat and inspect operation. (See E–7 THERMOSTAT REMOVAL/ INSTALLATION.) (See E–8 THERMOSTAT INSPECTION.) Is thermostat okay?	Yes	Go to next step.
		No	Replace thermostat.
4	Inspect cooling fan control system operation. (See F–234 Cooling Fan Control System Inspection.) Does cooling fan control system work properly?	Yes	Access ECT PID. Inspect for both ECT PID and temperature gauge on instrment cluster readings. If temperature gauge on instrument cluster indicates normal range but ECT PID is not same as temperature gauge reading, inspect ECT sensor. If temperature gauge on instrument cluster indicates cold range but ECT PID is normal, inspect temperature gauge and heat gauge unit.
		No	Repair or replace malfunctioning part.
5	Verify test results. • If okay, return to diagnostic index to service any additional symptoms. • If malfunction remains, replace PCM.		

NO.19 EXHAUST SMOKE

A6E398018881W21

19	EXHAUST SMOKE
DESCRIPTION	Blue, black, or white smoke from exhaust system
POSSIBLE CAUSE	**Blue smoke (Burning oil):** • PCV valve malfunction • Engine internal oil leakage **White smoke (Water in combustion):** • Cooling system malfunction (coolant loss) • Engine internal coolant leakage **Black smoke (Rich fuel mixture):** • Air cleaner restriction • Intake-air system is collapsed or restricted. • Fuel return line is restricted. • Excessive fuel pressure • Improper engine compression • Injector fuel leakage • Ignition system malfunction **Warning** **The following troubleshooting flow chart contains fuel system diagnosis and repair procedures. Read following warnings before performing fuel system services:** • **Fuel vapor is hazardous. It can easily ignite, causing serious injury and damage. Always keep sparks and flames away from fuel.** • **Fuel line spills and leakage are dangerous. Fuel can ignite and cause serious injuries or death and damage. Fuel can also irritate skin and eyes. To prevent this, always complete "BEFORE REPAIR PROCEDURE" and "AFTER REPAIR PROCEDURE" described in this manual.** **(See F–17 BEFORE REPAIR PROCEDURE.)** **(See F–17 AFTER REPAIR PROCEDURE.)** **Caution** • **Disconnecting/connecting quick release connector without cleaning it may possibly cause damage to fuel pipe and quick release connector. Always clean quick release connector joint area before disconnecting/connecting, and make sure that it is free of foreign material.**

Diagnostic procedure

STEP	INSPECTION	RESULTS	ACTION
1	What color is smoke coming from exhaust system?	Blue	Burning oil is indicated. Go to next step.
		White	Water in combustion is indicated. Go to Step 3.
		Black	Rich fuel mixture is indicated. Go to Step 4.
2	Remove and shake PCV valve. Does PCV valve rattle?	Yes	Inspect for following: • Damaged valve guide, stems or valve seals • Blocked oil drain passage in cylinder head • Piston ring is not seated, seized or worn. • Damaged cylinder bore If other drivability symptoms are present, return to diagnostic index to service any additional symptoms.
		No	Replace PCV valve.
3	Does cooling system hold pressure?	Yes	Inspect for following: • Cylinder head gasket leakage • Intake manifold gasket leakage • Cracked or porous engine block If other drivability symptoms are present, return to diagnostic index to service any additional symptoms.
		No	Inspect for cause.
4	Inspect for following: • Air cleaner restriction • Collapsed or restricted intake-air system • Restricted fuel return line Are all items okay?	Yes	Go to next step.
		No	Service as necessary. Repeat Step 4.
5	Connect WDS or equivalent to DLC-2. Retrieve any continuous memory, KOEO and KOER DTCs. Are there any DTCs displayed?	Yes	**DTC is displayed:** Go to appropriate DTC test.
		No	**No DTC is displayed:** Go to next step.

STEP	INSPECTION	RESULTS	ACTION
6	Install fuel pressure gauge between fuel pipe and fuel distributor. Start engine and run it at idle. Measure fuel line pressure at idle. Is fuel line pressure correct at idle? (See F–20 FUEL LINE PRESSURE INSPECTION)	Yes	Go to next step.
		No	**Zero or low:** • Inspect for clogged fuel line. • If okay, replace fuel pump unit. **High:** • Replace fuel pump unit.
7	Is strong blue spark visible at each disconnected high-tension lead while cranking engine?	Yes	Inspect spark plugs and CMP sensor.
		No	Inspect following: • High-tension leads • Ignition coil and connector
8	Verify test results. • If okay, return to diagnostic index to service any additional symptoms. • If malfunction remains, replace PCM.		

NO.20 FUEL ODOR (IN ENGINE COMPARTMENT)

A6E398018881W22

20	FUEL ODOR (IN ENGINE COMPARTMENT)
DESCRIPTION	Gasoline fuel smell or visible leakage
POSSIBLE CAUSE	• Excessive fuel pressure • Purge solenoid valve malfunction • Fuel tank vent system blockage • Charcoal canister malfunction • Fuel leakage from fuel system **Warning** **The following troubleshooting flow chart contains fuel system diagnosis and repair procedures. Read following warnings before performing fuel system services:** • **Fuel vapor is hazardous. It can easily ignite, causing serious injury and damage. Always keep sparks and flames away from fuel.** • **Fuel line spills and leakage are dangerous. Fuel can ignite and cause serious injuries or death and damage. Fuel can also irritate skin and eyes. To prevent this, always complete "BEFORE REPAIR PROCEDURE" and "AFTER REPAIR PROCEDURE" described in this manual.** **(See F–17 BEFORE REPAIR PROCEDURE.)** **(See F–17 AFTER REPAIR PROCEDURE.)** **Caution** • **Disconnecting/connecting quick release connector without cleaning it may possibly cause damage to fuel pipe and quick release connector. Always clean quick release connector joint area before disconnecting/connecting, and make sure that it is free of foreign material.**

Diagnostic procedure

STEP	INSPECTION	RESULTS	ACTION
1	Visually inspect for fuel leakage at fuel injector O-ring and fuel line. Service as necessary. Install fuel pressure gauge between fuel pipe and fuel distributor. Start engine and run it at idle. Measure fuel line pressure at idle. Is fuel line pressure correct at idle? (See F–20 FUEL LINE PRESSURE INSPECTION)	Yes	Go to next step.
		No	Replace fuel pump unit.
2	Inspect for blockage/restriction or open between engine vacuum port and charcoal canister. Inspect for blockage in fuel tank vent system. Is fault indicated?	Yes	Replace vacuum hose.
		No	Go to next step.
3	Inspect purge solenoid valve. (See F–39 PURGE SOLENOID VALVE INSPECTION.) Is solenoid operating properly?	Yes	Go to next step.
		No	Replace purge solenoid valve.

STEP	INSPECTION	RESULTS	ACTION
4	Connect WDS or equivalent to DLC-2. Retrieve any continuous memory, KOEO and KOER DTCs. Are there any DTCs displayed?	Yes	**DTC is displayed:** Go to appropriate DTC test.
		No	**No DTC is displayed:** Inspect charcoal canister for fuel saturation. If excess amount of liquid fuel is present, replace charcoal canister.
5	Verify test results. • If okay, return to diagnostic index to service any additional symptoms. • If malfunction remains, replace PCM.		

NO.21 ENGINE NOISE

A6E398018881W23

21	ENGINE NOISE
DESCRIPTION	Engine noise from under hood
POSSIBLE CAUSE	**Squeal, click or chirp noise:** • Improper engine oil level • Improper drive belt tension **Rattle sound noise:** • Loose parts **Hiss sound noise:** • Vacuum leakage • Loose spark plug • Air leakage from intake-air system • Improper variable air duct (VAD) control system operation **Rumble or grind noise:** • Improper drive belt tension **Rap or roar sound noise:** • Exhaust system looseness **Other noise:** • Camshaft friction gear noise or MLA noise • Timing chain noise

Diagnostic procedure

STEP	INSPECTION	RESULTS	ACTION
1	Is squeal, click or chirp sound present?	Yes	Inspect engine oil level or drive belts.
		No	Go to next step.
2	Is rumble or grind sound present?	Yes	Inspect drive belts.
		No	Go to next step.
3	Is rattle sound present?	Yes	Inspect location of rattle for loose parts.
		No	Go to next step.
4	Is hiss sound present?	Yes	Inspect for following: • Vacuum leakage • Spark plug looseness • Intake-air system leakage • Variable air duct (VAD) control system operation (See F–238 Variable Air Duct (VAD) Control System Operation Inspection (L3 Engine Models).)
		No	Go to next step.
5	Is rap or roar sound present?	Yes	Inspect exhaust system for loose parts.
		No	Go to next step.
6	Is knock sound present?	Yes	Go to symptom troubleshooting "No.11 Knocking/ pinging".
		No	If noise comes from engine internal, inspect for friction gear, timing chain or MLA noise.
7	Verify test results. • If okay, return to diagnostic index to service any additional symptoms. • If malfunction remains, replace PCM.		

NO.22 VIBRATION CONCERNS (ENGINE)

A6E398018881W24

22	VIBRATION CONCERNS (ENGINE)
DESCRIPTION	• Vibration from under hood or driveline
POSSIBLE CAUSE	• Loose attaching bolts or worn parts • Components malfunction such as worn parts

Diagnostic procedure

STEP	INSPECTION	RESULTS	ACTION
1	Inspect following components for loose attaching bolts or worn parts: • Cooling fan • Condenser fan • Drive belt and pulleys • Engine mounts All items okay?	Yes	Inspect following systems: • Wheels • ATX • Driveline • Suspension
		No	Readjust or retighten engine mount installation position. Service if necessary for other parts.
2	Verify test results. • If okay, return to diagnostic index to service any additional symptoms. • If malfunction remains, replace PCM.		

NO.23 A/C DOES NOT WORK SUFFICIENTLY

A6E398018881W25

23	A/C DOES NOT WORK SUFFICIENTLY.
DESCRIPTION	A/C compressor magnetic clutch does not engage when A/C switch is turned on.
POSSIBLE CAUSE	• Improper refrigerant charging amount • Open A/C magnetic clutch • Open circuit between A/C relay and A/C magnetic clutch • Poor GND of A/C magnetic clutch • Refrigerant pressure switch is stuck open. • A/C relay is stuck open. • Seized A/C compressor • Open circuit between A/C switch and PCM through both refrigerant pressure switch and A/C amplifier

Diagnostic procedure

STEP	INSPECTION	RESULTS	ACTION
1	Connect WDS or equivalent to DLC-2. Retrieve any continuous memory, KOEO and KOER DTCs. Are there any DTCs displayed?	Yes	**DTC is displayed:** Go to appropriate DTC test.
		No	**No DTC is displayed:** Go to next step.
2	Disconnect A/C compressor connector. Start engine and turn A/C switch on. Is there correct voltage at terminal of A/C compressor magnetic clutch connector? **Specification** **More than 10.5 V**	Yes	Inspect for GND condition of magnetic clutch on A/C compressor. If GND condition is okay, inspect for open circuit magnetic clutch coil.
		No	Go to next step.
3	Disconnect refrigerant pressure switch connector. Connect jumper wire between terminals of A/C high pressure switch connector. Connect jumper wires between terminals of refrigerant pressure switch connector. Connect WDS or equivalent to DLC-2. Access ACSW PID. Turn ignition switch to ON position. Turn A/C switch on and set blower fan at any speed. Does ACSW PID read ON?	Yes	Inspect refrigerant pressure switch operation. If switch is okay, go to next step.
		No	Inspect for following: • A/C switch is stuck open. • Open circuit between refrigerant pressure switch and PCM terminal 1AC • Open circuit of blower motor fan switch and resistor (if blower motor does not operate) • Evaporator temperature sensor and A/C amplifier
4	Remove jumper wire from switch connector. Reconnect connector to refrigerant pressure switch. Start engine and turn A/C switch on. Does fan operate?	Yes	Inspect for stuck open A/C relay. Replace if necessary.
		No	Inspect following and repair or replace as necessary: • Refrigerant charging amount • A/C compressor for being seized
5	Verify test results. • If okay, return to diagnostic index to service any additional symptoms. • If malfunction remains, replace PCM.		

NO.24 A/C IS ALWAYS ON OR A/C COMPRESSOR RUNS CONTINUOUSLY

A6E398018881W26

24	A/C IS ALWAYS ON OR A/C COMPRESSOR RUNS CONTINUOUSLY.
DESCRIPTION	A/C compressor magnetic clutch does not disengage.
POSSIBLE CAUSE	• Stuck engagement A/C compressor magnetic clutch • A/C relay is stuck closed. • Short to GND between A/C switch and PCM • Short to GND circuit between A/C relay and PCM • A/C relay to magnetic clutch circuit shorted to battery power

Diagnostic procedure

STEP	INSPECTION	RESULTS	ACTION
1	Connect WDS or equivalent to DLC-2. Retrieve any continuous memory, KOEO and KOER DTCs. Are there any DTCs displayed?	Yes	**DTC is displayed:** Go to appropriate DTC test.
		No	**No DTC is displayed:** Go to next step.
2	Start engine and run it at idle. Turn A/C switch on. Remove A/C relay. Does A/C magnetic clutch disengage?	Yes	Inspect for following: • A/C relay is stuck closed. • Short to GND circuit between A/C relay and PCM terminal 4O. If both items okay, go to next step.
		No	Inspect if circuit between A/C relay and magnetic clutch shorts to battery power circuit. If circuit is okay, inspect magnetic clutch stuck engagement or clearance.
3	Connect WDS or equivalent to DLC-2. Access ACSW PID. Start engine and turn A/C switch on. Read ACSW PID while disconnecting refrigerant pressure switch connector. **Note** • ACSW PID should read OFF when disconnecting connector. If ACSW PID reading remains ON, short to GND circuit may be present. Does ACSW PID reading remain ON?	Yes	Inspect for short to GND circuit between refrigerant pressure switch and PCM terminal 1AC.
		No	Go to next step.
4	Reconnect refrigerant pressure switch connector. Read ACSW PID while turning off A/C switch. **Note** • ACSW PID should read OFF when turning A/C switch off. If ACSW PID reading remains ON, short to GND circuit may be present. Does ACSW PID reading remain ON?	Yes	Inspect following: • Short to GND circuit between A/C switch and A/C amplifier • Short to GND circuit between A/C amplifier and refrigerant pressure switch
		No	Inspect for stuck closed A/C switch.
5	Verify test results. • If okay, return to diagnostic index to service any additional symptoms. • If malfunction remains, replace PCM.		

NO.25 A/C IS NOT CUT OFF UNDER WIDE OPEN THROTTLE CONDITIONS

A6E398018881W27

25	A/C IS NOT CUT OFF UNDER WOT CONDITIONS.
DESCRIPTION	A/C compressor magnetic clutch does not disengage under WOT.
POSSIBLE CAUSE	• TP sensor malfunction • TP sensor misadjustment • Loosely installed TP sensor.

Diagnostic procedure

STEP	INSPECTION	RESULTS	ACTION
1	Does A/C compressor disengage when A/C switch is turned off?	Yes	Go to next step.
		No	Go to symptom troubleshooting "No.24 A/C is always on or A/C compressor runs continuously".

STEP	INSPECTION	RESULTS	ACTION
2	Connect WDS or equivalent to DLC-2. Retrieve any continuous memory, KOEO and KOER DTCs. Are there any DTCs displayed?	Yes	**DTC is displayed:** Go to appropriate DTC test.
		No	**No DTC is displayed:** Inspect TP sensor for proper adjustment.
3	Verify test results. • If okay, return to diagnostic index to service any additional symptoms. • If malfunction remains, replace PCM.		

NO.26 EXHAUST SULPHUR SMELL

A6E398018881W28

26	EXHAUST SULPHUR SMELL
DESCRIPTION	Rotten egg smell (sulphur) from exhaust
POSSIBLE CAUSE	• Electrical connectors are disconnected or connected poorly • Charcoal canister malfunction • Vacuum lines are disconnected or connected improperly. • Improper fuel pressure • Poor fuel quality **Warning** **The following troubleshooting flow chart contains fuel system diagnosis and repair procedures. Read following warnings before performing fuel system services:** • **Fuel vapor is hazardous. It can easily ignite, causing serious injury and damage. Always keep sparks and flames away from fuel.** • **Fuel line spills and leakage are dangerous. Fuel can ignite and cause serious injuries or death and damage. Fuel can also irritate skin and eyes. To prevent this, always complete "BEFORE REPAIR PROCEDURE" and "AFTER REPAIR PROCEDURE" described in this manual.** **(See F–17 BEFORE REPAIR PROCEDURE.)** **(See F–17 AFTER REPAIR PROCEDURE.)** **Caution** • **Disconnecting/connecting quick release connector without cleaning it may possibly cause damage to fuel pipe and quick release connector. Always clean quick release connector joint area before disconnecting/connecting, and make sure that it is free of foreign material.**

Diagnostic procedure

STEP	INSPECTION	RESULTS	ACTION
1	Are any driveability or exhaust smoke concerns present?	Yes	Go to appropriate flow chart.
		No	Go to next step.
2	Inspect following: • Electrical connections • Vacuum lines • Fuel quality Are all items okay?	Yes	Go to next step.
		No	Service as necessary. Repeat Step 2.
3	Connect WDS or equivalent to DLC-2. Retrieve any continuous memory, KOEO and KOER DTCs. Are there any DTCs displayed?	Yes	**DTC is displayed:** Go to appropriate DTC test.
		No	**No DTC is displayed:** Go to next step.
4	Install fuel pressure gauge between fuel pipe and fuel distributor. Start engine and run it at idle. Is fuel line pressure correct at idle? (See F–20 FUEL LINE PRESSURE INSPECTION)	Yes	Go to next step.
		No	**Zero or low:** Inspect for clogged fuel line. If okay, replace fuel pump unit. **High:** Replace fuel pump unit.
5	Inspect charcoal canister for fuel saturation. Is excess amount of liquid fuel present in canister?	Yes	Replace charcoal canister.
		No	Inspect fuel tank vent system. If fuel tank vent system is okay, since sulfur content can vary in different fuels, suggest trying a different brand. If fuel tank vent system is not okay, repair or replace malfunctioning parts.
6	Verify test results. • If okay, return to diagnostic index to service any additional symptoms. • If malfunction remains, replace PCM.		

NO.27 CONSTANT VOLTAGE

A6E398018881W29

27	CONSTANT VOLTAGE
DESCRIPTION	Incorrect constant voltage
POSSIBLE CAUSE	• Constant voltage circuit malfunction **Note** • TP sensor uses constant voltage.

Diagnostic procedure

STEP	INSPECTION	RESULTS	ACTION
1	Disconnect TP sensor connector where constant voltage circuit inspection failed. Turn ignition switch to ON position. Measure voltage between following TP sensor connector terminals: • Constant voltage terminal - GND terminal Is constant voltage **greater than 6.0 V**?	Yes	Go to Step 13.
		No	Go to next step.
2	Is voltage across battery terminals **greater than 10.5 V**?	Yes	Go to next step.
		No	Inspect charging system.
3	Turn ignition switch off. Leave TP sensor connector disconnected. Measure voltage between battery positive terminal and GND (between PCM and TP sensor) circuit at appropriate sensor connector. Is voltage **greater than 10.5 V** and **within 1.0 V** of battery voltage?	Yes	Go to next step.
		No	Go to Step 8.
4	**Note** • Purpose of this step is to determine if WDS or equivalent is communicating with PCM. Turn ignition switch to ON position. Attempt to access ECT PID. Can ECT PID be accessed?	Yes	Go to Step 7.
		No	Go to next step.
5	Turn ignition switch off. Disconnect TP sensor and PCM connectors. Turn ignition switch to ON position. Measure voltage between PCM connector terminals 2Y and 2AB. Is voltage **greater than 10.5 V**?	Yes	Go to next step.
		No	Repair open circuit between PCM terminal 2Y and main relay.
6	Leave TP sensor and PCM connectors disconnected. Measure resistance between PCM connector terminals 2Y and 2AB. Is resistance **greater than 10,000 ohms**?	Yes	Inspect for constant voltage at suspect sensor connector again.
		No	Repair constant voltage circuit short to GND.
7	Turn ignition switch off. Leave TP sensor disconnected. Disconnect PCM connector. Measure resistance between PCM connector terminal 2K and constant voltage circuit at appropriate sensor connector. Is resistance **less than 5.0 ohms**?	Yes	Inspect for constant voltage at suspect sensor connector again.
		No	Repair open constant voltage circuit.
8	**Note** • Purpose of this step is to determine if WDS or equivalent is communicating with PCM. Reconnect TP sensor connector. Turn ignition switch to ON position. Attempt to access ECT PID. Can ECT PID be accessed?	Yes	Go to next step.
		No	Go to Step 11.

STEP	INSPECTION	RESULTS	ACTION
9	Are DTCs present for two or more sensors connected to PCM terminal 2H? Sensor connected to PCM terminal 2H: • IAT sensor (P0112, P0113) • FHO2S (P0131, P0132) • RHO2S (P0138) • Barometric pressure sensor (P2228, P2229) • Manifold absolute pressure sensor (P0107, P0108) • ECT sensor (P0117, P0118) • TP sensor (P0122, P0123) • TR switch (P0707, P0708) • TFT sensor (P0712, P0713)	Yes	Go to next step.
		No	Repair open GND circuit to sensor where constant voltage circuit inspection failed.
10	Turn ignition switch off. Disconnect WDS or equivalent from DLC-2. Disconnect PCM connector. Measure resistance between GND circuit at appropriate sensor connector and PCM connector terminal 2H. Is resistance **less than 5.0 ohms**?	Yes	Reconnect sensor connector. Go to appropriate DTC test.
		No	Repair open GND circuit.
11	Turn ignition switch off. Disconnect PCM connector. Measure resistance between battery negative terminal and PCM terminals 4X, 2AB, and 2AC. Is each resistance **less than 5.0 ohms**?	Yes	Go to next step.
		No	Repair open GND circuit.
12	Turn ignition switch off. Measure resistance between GND circuit at following sensor connector and GND: • IAT sensor (integated in MAF sensor) • FHO2S • RHO2S • Barometric pressure sensor • Manifold absolute pressure sensor • ECT sensor • TP sensor • TR switch • TFT sensor	Yes	GND circuits are okay. Inspect for constant voltage at suspect sensor connector again.
		No	Inspect for open GND circuit.
13	Turn ignition switch off. Disconnect TP sensor and PCM connectors. Turn ignition switch to ON position. Measure voltage between constant voltage circuit at TP sensor connector and battery negative terminal. Is voltage **less than 0.5 V**?	Yes	Inspect for constant voltage at suspect sensor connector again.
		No	Repair constant voltage circuit shorted to power in harness.
14	Verify test results. • If okay, return to diagnostic index to service any additional symptoms. • If malfunction remains, replace PCM.		

NO.28 SPARK PLUG CONDITION

A6E398018881W30

28	SPARK PLUG CONDITION
DESCRIPTION	Incorrect spark plug condition
POSSIBLE CAUSE	**Note** • Inspecting spark plugs condition can determine whether problem is related to a specific cylinder possibly all cylinders. **Wet/carbon stuck on specific plug:** • Spark—Weak, not visible • Air/fuel mixture—Excessive fuel injection volume • Compression—No compression, low compression • Faulty spark plug **Grayish white with specific plug:** • Air/fuel mixture—Insufficient fuel injection volume • Faulty spark plug **Wet/carbon is stuck on all plugs:** • Spark—Spark weak • Air/fuel mixture—Too rich • Compression—Low compression • Clogging in intake/exhaust system **Grayish white with all plugs:** • Air/fuel mixture—Too lean **Warning** **The following troubleshooting flow chart contains the fuel system diagnosis and repair procedures. Read the following warnings before performing the fuel system services:** • **Fuel vapor is hazardous. It can easily ignite, causing serious injury and damage. Always keep sparks and flames away from fuel.** • **Fuel line spills and leakage are dangerous. Fuel can ignite and cause serious injuries or death and damage. Fuel can also irritate skin and eyes. To prevent this, always complete "BEFORE REPAIR PROCEDURE" and "AFTER REPAIR PROCEDURE" described in this manual.** **(See F–17 BEFORE REPAIR PROCEDURE.)** **(See F–17 AFTER REPAIR PROCEDURE.)** **Caution** • **Disconnecting/connecting quick release connector without cleaning it may possibly cause damage to fuel pipe and quick release connector. Always clean quick release connector joint area before disconnecting/connecting, and make sure that it is free of foreign material.**

Diagnostic procedure

STEP	INSPECTION	RESULTS	ACTION
1	Remove all spark plugs. Inspect spark plug condition. Is spark plug condition okay?	Yes	Troubleshooting completed.
		No	**Specific plug is wet or covered with carbon:** Go to next step. **Specific plug looks grayish white:** Go to Step 7. **All plugs are wet or covered with carbon:** Go to Step 9. **All plugs look grayish white:** Go to Step 15.
2	Is spark plug wet/covered with carbon by engine oil?	Yes	Working up and down inspect all areas related to oil.
		No	Go to next step.
3	Inspect spark plug for following: • Cracked insulator • Heat range • Air gap • Worn electrode Is spark plug okay?	Yes	Go to next step.
		No	Replace spark plug.
4	Inspect compression pressure at suspected faulty cylinder. Is compression pressure correct? (See B–9 COMPRESSION INSPECTION.)	Yes	Go to next step.
		No	Repair or replace malfunctioning parts.
5	Install all spark plugs. Carry out spark test at suspected faulty cylinder. Is strong blue spark visible? (Compare with normal cylinder.)	Yes	Go to next step.
		No	Repair or replace malfunctioning parts.

STEP	INSPECTION	RESULTS	ACTION
6	Carry out fuel line pressure inspection. Is fuel line pressure correct?	Yes	Inspect fuel injector for following: • Open or short in injector • Leakage • Injection volume
		No	**Zero or low:** Inspect fuel pump circuit. Inspect for fuel pump relief valve open. Inspect for fuel leakage inside pressure regulator. Inspect for clogged main fuel line. **High:** Inspect pressure regulator for high pressure cause. Inspect for clogged fuel return line.
7	Inspect spark plug for following. • Heat range • Air gap Is spark plug okay?	Yes	Go to next step.
		No	Replace spark plug.
8	Remove suspected fuel injector. Inspect following: • Resistance (See F–31 FUEL INJECTOR INSPECTION.) • Fuel injection volume (See F–31 FUEL INJECTOR INSPECTION.) Are all above items okay?	Yes	Inspect for open circuit between suspected fuel injector connector terminal and PCM connector following terminals: • **For #1 or #4 cylinder: 1A** • **For #2 or #3 cylinder: 1B**
		No	Replace fuel injector.
9	Is air cleaner element free of restrictions?	Yes	Go to next step.
		No	Replace air cleaner element.
10	Carry out spark test. Is strong blue spark visible at each cylinder?	Yes	Go to next step.
		No	Repair or replace malfunctioning parts.
11	Carry out fuel line pressure inspection. Is fuel line pressure correct? (See F–20 FUEL LINE PRESSURE INSPECTION)	Yes	Go to next step.
		No	**Zero or low:** Inspect for clogged fuel line. If okay, replace fuel pump unit. **High:** Replace fuel pump unit.
12	Inspect following PIDs. • ECT • O2S11 (When engine can be started) • MAF (See F–45 PCM INSPECTION.) Are PIDs okay?	Yes	Go to next step.
		No	Repair or replace malfunctioning parts.
13	Carry out purge control inspection. (When engine can be started) (See F–233 Purge Control System Inspection.) Is purge control correct?	Yes	Go to next step.
		No	Repair or replace malfunctioning parts.
14	Carry out compression inspection. Is compression correct?	Yes	Inspect for clogging in exhaust system.
		No	Repair or replace malfunctioning parts.
15	When engine cannot be started, inspect intake-air system for air leakage. When engine can be started, carry out intake manifold vacuum inspection. Is air sucked in from intake-air system?	Yes	Repair or replace malfunctioning part.
		No	Go to next step.
16	Carry out fuel line pressure inspection. Is fuel line pressure correct? (See F–20 FUEL LINE PRESSURE INSPECTION)	Yes	Inspect following PIDs. • ECT • O2S11 • MAF (See F–45 PCM INSPECTION.) Inspect PCM GND condition.
		No	**Zero or low:** Inspect for clogged fuel line. If okay, replace fuel pump unit. **High:** Replace fuel pump unit.
17	Verify test results. • If okay, return to diagnostic index to service any additional symptoms. • If malfunction remains, replace or reprogram PCM.		

INTERMITTENT CONCERN TROUBLESHOOTING

A6E398018881W31

Vibration Method

1. If malfunction occurs or becomes worse while driving on a rough road or when engine is vibrating, perform the steps below.

Note

- There are several reasons vehicle or engine vibration could cause an electrical malfunction. Some of the things to check for are:
  - — Connectors not fully seated.
  - — Wire harnesses not having full play.
  - — Wires laying across brackets or moving parts.
  - — Wires routed too close to hot parts.
- An improperly routed, improperly clamped, or loose harness can cause wiring to become pinched between parts.
- The connector joints, points of vibration, and places where wire harnesses pass through the fire wall, body panels, etc. are the major areas to be checked.

Inspection Method for Switch Connectors or Wires

1. Connect WDS or equivalent to DLC-2.
2. Turn ignition key to ON position (Engine OFF).

Note

- If engine starts and runs, perform the following steps at idle.

3. Access PIDs for the switch you are inspecting.
4. Turn switch on manually.
5. Shake each connector or wire harness a bit vertically and horizontally while monitoring the PID.
   - If PID value is unstable, check for poor connection.

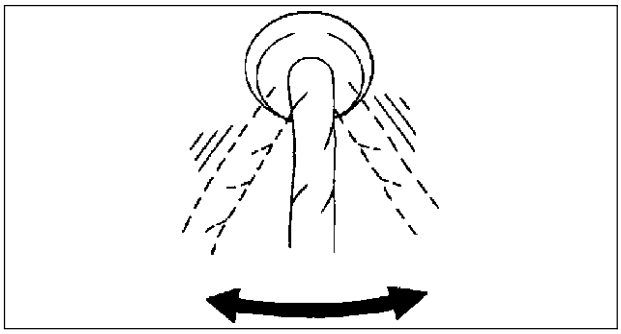

Y3U103WN3

Inspection Method for Sensor Connectors or Wires

1. Connect WDS or equivalent to DLC-2.
2. Turn ignition switch to ON position (Engine OFF).

Note

- If engine starts and runs, perform the following steps at idle.

3. Access PIDs for the switch you are inspecting.
4. Shake each connector or wire harness a bit vertically and horizontally while monitoring the PID.
   - If PID value is unstable, check for poor connection.

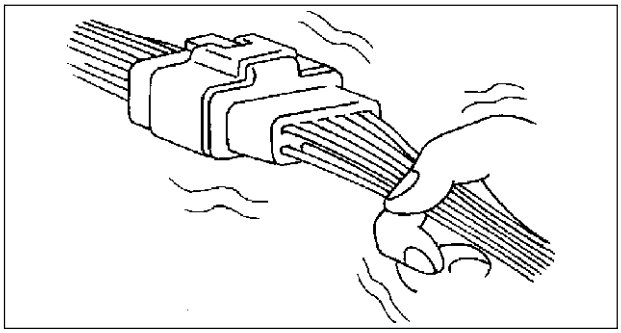

Y3U103WN4

Inspection Method for Sensors

1. Connect WDS or equivalent to DLC-2.
2. Turn ignition switch to ON position (Engine OFF).

Note
- If engine starts and runs, perform the following steps at idle.

3. Access PIDs for the switch you are inspecting.
4. Vibrate the sensor slightly with your finger.
   - If PID value is unstable or malfunction occurs, check for poor connection and/or poorly mounted sensor.

Inspection Method for Actuators or Relays

1. Connect WDS or equivalent to DLC-2.
2. Turn ignition switch to ON position (Engine OFF).

Note
- If engine starts and runs, perform the following steps at idle.

3. Prepare the Output State Control for actuators or relays that you are inspecting.
4. Vibrate the actuator or relay with your finger for **3 seconds** are Output State Control is activated.
   - If variable click sound is heard, check for poor connection and/or poorly mounted actuator or relay.

Note
- Vibrating relays too strongly may result in open relays.

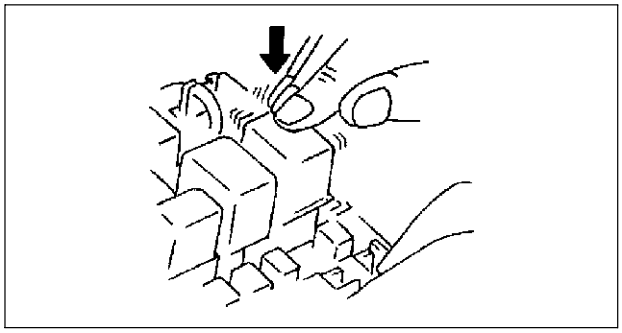

Y3U103WN5

Water Sprinkling Method

Caution
- **Indirectly change the temperature and humidity by spraying water onto the front of the radiator.**
- **If a vehicle is subject to water leakage, the leakage may damage the control module. When testing a vehicle with a water leakage problem, special caution must be used.**

If malfunction occurs only during high humidity or rainy/snowy weather, perform the following steps.

1. Connect WDS or equivalent to DLC-2 if you are inspecting sensors or switches.
2. Turn ignition switch to ON position (Engine OFF).

Note
- If engine starts and runs, perform the following steps at idle.

3. Access PIDs for sensor or switch if you are inspecting sensors or switches.
4. If you are inspecting the switch, turn it on manually.
5. Spray water onto the vehicle or run it through a car wash.
   - If PID value is unstable or malfunction occurs, repair or replace part as necessary.

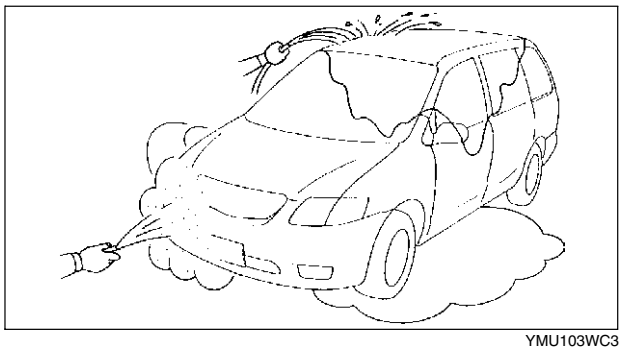

YMU103WC3

ENGINE CONTROL SYSTEM OPERATION INSPECTION

A6E398018881W32

Main Relay Operation Inspection

1. Verify that the main relay clicks when the ignition switch is turned to ON position and off.
   - If there is no operation sound, inspect the following.
     — Main relay (See T–24 RELAY INSPECTION.)
     — Harness and connector between ignition switch and main relay terminal A.
     — Harness and connector between PCM terminal 2X and main relay terminal E.

Intake Manifold Vacuum Inspection

1. Verify air intake hoses are installed properly.
2. Start the engine and run it at idle.
3. Disconnect the vacuum hose between the intake manifold and purge solenoid valve from the intake manifold side.
4. Connect a vacuum gauge to the intake manifold and measure the intake manifold vacuum.
   - If not as specified, inspect the following.

Specification
More than 60 kPa {450 mmHg, 18 inHg}

Note
- Air suction can be located by engine speed change when lubricant is sprayed on the area where suction is occurring.
  — Air suction at throttle body, intake manifold and PCV valve installation points
  — Accelerator cable free play
  — Fuel injector insulator
  — Engine compression
  (See B–9 COMPRESSION INSPECTION.)

Idle Air Control System Inspection

Engine coolant temperature compensation inspection

1. Connect WDS or equivalent to the DLC-2.
2. Select the following PIDs.
   - ECT
   - IAT
   - RPM
3. Verify that the engine is in cold condition, then start the engine.
4. Verify that the engine speed decreases as the engine warms up.
   - If the engine speed does not decrease or decreases slowly, inspect the following.
     — ECT sensor and related harness
     (See F–53 ENGINE COOLANT TEMPERATURE (ECT) SENSOR INSPECTION.)
     — IAC valve and related harness
     (See F–13 IDLE AIR CONTROL (IAC) VALVE INSPECTION.)

Load compensation inspection

1. Start the engine and run is at idle.
2. Connect WDS or equivalent to the DLC-2.
3. Verify that P0506, P0507 or P0511 not displayed.
   - If P0506, P0507 or P0511 shown, carry out DTC inspection.
   (See F–67 DTC TABLE.)
4. Change the duty value of the IAC valve to **100%** using the IAC PID.
5. Verify that the idle speed increases.
   - If the idle speed does not change, inspect the following.
     — IAC valve air passage
     — Open or short circuit between IAC valve connector terminals and PCM connector terminals 4G and 4J
6. Select the following PIDs.
   - ACSW
   - IAC
   - PSP
   - RPM

Note
- Excludes temporary idle speed drop just after the loads are turned on.

7. Verify that the engine speed is within the specification under each load condition.
   - If not as specified specific load condition, inspect the following.
     — A/C switch and related harness
     (See U–47 CLIMATE CONTROL UNIT INSPECTION.)
     — Fan switch and related harness
     (See U–47 CLIMATE CONTROL UNIT INSPECTION.)
     — PSP switch and related harness
     (See F–58 POWER STEERING PRESSURE (PSP) SWITCH INSPECTION.)

Engine speed

Load condition		Engine speed (rpm)*1			
		L8	LF		L3
			MTX	ATX	
No load		650—750	600—700	650—750	600—700
E/L operating		650—750	650—750	650—750	650—750
P/S operating		700—800	650—750	650—750	650—750
A/C operating*2	Refrigerant pressure low*3	700—800	700—800	650—750	700—800
	Refrigerant pressure high*4	700—800	700—800	700—800	700—800

*1 : Neutral or P position
*2 : A/C switch and fan switch are on.
*3 : Refrigerant pressure switch (middle pressure) is off.
*4 : Refrigerant pressure switch (middle pressure) is on.

VIS Operation Inspection

1. Start the engine.
2. Inspect the rod operation under the following condition.

Rod operation

Engine speed	Approx. 4,400 rpm	
	Below	Above
Shutter valve actuator	Operate	Not operate

- If the rod operation is not as specified, inspect as follows.

(1) Stop the engine.
(2) Connect WDS or equivalent to the DLC-2.
(3) Verify that DTC P0661 or P0662 is not displayed.
   - If DTC P0661 or P0662 is shown, carry out DTC inspection.
   (See F–67 DTC TABLE.)
(4) Turn ignition switch to ON.
(5) Turn the VIS control solenoid valve from on to off using the IVC PID and verify that operation sound of the solenoid valve is heard.
   - If the operation sound is heard, inspect the following.
     — Vacuum hose and vacuum chamber for looseness or damage
     — Shutter valve actuator
     (See F–14 VARIABLE INTAKE-AIR SYSTEM (VIS) SHUTTER VALVE ACTUATOR INSPECTION (L3).)
     — Shutter valve stuck open or close
   - If the operation sound is not heard, inspect the following.
     — VIS control solenoid valve
     (See F–14 VARIABLE INTAKE-AIR SYSTEM (VIS) CONTROL SOLENOID VALVE INSPECTION (L3).)

Variable Tumble Control System (VTCS) Operation Inspection

1. Connect the WDS or equivalent to the DLC-2.
2. Access ECT PID.
3. Verify that ECT PID is **between 63°C {145°F} and 67°C {152°F}**.
4. Start the engine.
5. Inspect rod operation under the following condition.

Rod operation

Engine speed	3,750 rpm	
	Below	Above
Shutter valve actuator	Operate	Not operate

- If the rod operation is not specified, inspect as follows.

(1) Verify that DTC No. P2009 or P2010 is not displayed.
- If DTC No. P2009 or P2010 are shown, carry out DTC inspection. (See F–67 DTC TABLE.)

(2) Turn ignition switch to ON.

(3) Turn the VTCS solenoid valve from on to off using the IMRC PID and verify that operation sound of the solenoid valve is heard.
- If the operation sound is heard, inspect the following.
  - — Vacuum hose and vacuum chamber for looseness or damage
  - — Shutter valve actuator (See F–15 VARIABLE TUMBLE CONTROL SYSTEM (VTCS) SHUTTER VALVE ACTUATOR INSPECTION.)
  - — Shutter valve stuck open or close
- If the operation sound is not heard, inspect the following.
  - — VIS control solenoid valve (See F–15 VARIABLE TUMBLE CONTROL SOLENOID VALVE INSPECTION.)

Fuel Injector Operation Inspection

STEP	INSPECTION	RESULTS	ACTION
1	While cranking engine, inspect for fuel injector operation sound at each cylinder using a soundscope. Is operation sound heard?	Yes	Fuel injector operation is okay.
		No	**All cylinders no heard:** Go to next step. **Some cylinders no heard:** Go to Step 3.
2	Carry out main relay operation inspection. Is main relay operation normal?	Yes	Inspect following: • Fuel injector power system related wiring harness and connectors • PCM connectors • Fuel injector GND and related wiring harness and connectors
		No	Repair or replace malfunctioning parts.
3	Change fuel injector connector of not operating fuel injector and operating fuel injector. Is operation sound heard?	Yes	Go to next step.
		No	Replace fuel injector.
4	Are wiring harness and connectors of not operation fuel injector okay? (Open or short)	Yes	Inspect PCM terminal voltage of fuel injector signal.
		No	Repair or replace malfunctioning parts.

Fuel Cut Control System Inspection

1. Warm up engine and let it idle.
2. Turn off the electrical loads and A/C switch.
3. Connect WDS or equivalent to the DLC-2.
4. Select RPM and FUELPW1 PIDs.
5. Monitor both PIDs while performing the following steps.

(1) Depress the accelerator pedal and increase the engine speed to **4,000 rpm**.

(2) Release the accelerator pedal (brake pedal is not depressed) and verify that the fuel injector duration time is **0 msec.**, and **2—5 msec.** when the engine speed drops below **1,200 rpm**.
- If not as specified, inspect the following.
  - — ECT sensor and related harness (See F–53 ENGINE COOLANT TEMPERATURE (ECT) SENSOR INSPECTION.)
  - — Neutral/clutch switch and related harness (MTX) (See F–59 CLUTCH SWITCH INSPECTION.)
  - — TR switch and related harness (ATX) (See K–14 TRANSAXLE RANGE (TR) SWITCH INSPECTION.)

Fuel Pump Operation Inspection

1. Connect WDS or equivalent to the DLC-2.
2. Remove the fuel-filler cap.
3. Turn the ignition switch to ON position.
4. Turn the fuel pump relay from off to on using the FP PID and inspect if the operation sound is heard.
   - If no operation sounds is heard, proceed to next step.
5. Measure the voltage at harness side fuel pump connector terminal B.

Specification
B+ (Ignition switch is on)

- If the voltage is as specified, inspect the following.
  — Fuel pump continuity
  — Fuel pump GND
  — Wiring harness between fuel pump relay and PCM terminal 4P (without immobilizer system), 4Q (with immobilizer system)
- If not as specified, inspect the following.
  — Fuel pump relay (See T–24 RELAY INSPECTION.)
  — Wiring harness and connector (Main relay-fuel pump relay-fuel pump)

Fuel Pump Control System Inspection

1. Connect WDS or equivalent to the DLC-2.
2. Turn the ignition switch to ON position.
3. Select FP PID.
4. Turn the fuel pump relay from off to on and inspect if the operation sound of the fuel pump relay is heard.
   - If no operation sound is heard, inspect the fuel pump relay.
   - If the fuel pump relay is normal, inspect the following.
     — Wiring harnesses and connectors (Main relay-fuel pump relay-PCM)

Spark Test

1. Remove the fuel pump relay.
2. Verify that each high-tension lead and connector is connected properly.
3. Inspect the ignition system in the following procedure.

Warning

- **High voltage in the ignition system can cause strong electrical shock which can result in serious injury. Avoid direct contact to the vehicle body during the following spark test.**

STEP	INSPECTION	RESULTS	ACTION
1	**Note** • No.1 and No.4 cylinders and No.2 and No.3 cylinders are ignited simultaneously. Disconnect high-tension lead from spark plugs. Remove spark plugs. Reconnect spark plugs to high-tension lead. Ground spark plugs to engine. Is strong blue spark visible at each cylinder while cranking?	Yes	Ignition system is okay.
		No	**Some cylinders do not spark:** Go to next step. **All cylinders do not spark:** Go to Step 5.
2	Inspect spark plugs for damage, wear, carbon deposits and proper plug gap. Are spark plugs okay?	Yes	Go to next step.
		No	Replace spark plugs, then go to Step 1.
3	Inspect high-tension leads for insulation damage, looseness, shorting or other damage. Are high-tension leads okay?	Yes	Go to next step.
		No	Replace high-tension leads, then go to Step 1.
4	Inspect following wiring harnesses for open or short: • Ignition coil terminal C-PCM terminal 1A • Ignition coil terminal A-PCM terminal 1B Are wiring harnesses okay?	Yes	Inspect and replace ignition coil. See G–9 IGNITION COIL INSPECTION.
		No	Repair or replace malfunctioning parts, then go to Step 1.
5	Measure voltage at terminal B in ignition coil. Is voltage reading **B+**?	Yes	Go to next step.
		No	Inspect power supply circuit of ignition coil.
6	Does PCM connector or ignition coil connector have poor connection?	Yes	Repair or replace connector, then go to Step 1.
		No	Go to next step.

STEP	INSPECTION	RESULTS	ACTION
7	Are following item okay? • CKP sensor and crankshaft pulley • PCM terminal 1A/1B voltage **Specification** **Approx. 1.5 V**	Yes	Inspect for open or short in wiring harness and connector of CKP sensor.
		No	Repair or replace malfunctioning parts, then go to Step 1.

EGR Control System Inspection

1. Verify that EGR valve operation (initial operation) sound is heard when the ignition switch is turned to ON position.
   - If the operation sound is not heard, connect WDS or equivalent to the DLC-2 and verify that the DTC P0403 is shown. Carry out DTC inspection. (See F–67 DTC TABLE.)
2. Start the engine and run it at idle.
3. Increase the step value of EGR valve from 0 to 40 using SEGRP PID.
4. Operate the EGR valve and inspect if the engine speed becomes unstable or the engine stalls.
   - If the engine speed will not change, proceed to following.
   (1) Stop the engine.
   (2) Remove the EGR valve.
   (3) Connect the EGR valve connector.
   (4) Turn the ignition switch to ON.
   (5) Increase the step value of EGR valve from 0 to 40 using SEGRP PID.
   (6) Inspect the EGR operation.
      - If the EGR valve is operated, clean the EGR valve and reinspect from Step 2.
      - If the EGR valve will not operate, replace the EGR valve and reinspect from Step 2.
5. Warm up the engine to normal operating temperature.
6. Select the following PIDs.
   - ECT
   - RPM
   - SEGRP
   - TP
   - VSS
7. Let the vehicle idle and verify that the SEGRP value is 0.
8. Put the vehicle in drive.
9. Depress the accelerator pedal and verify that the SEGRP value is increased.
   - If the SEGRP value will not increase, inspect the VSS, TP and ECT PIDs. (See F–45 PCM INSPECTION.)
10. Stop the vehicle and verify that the SEGRP value is returned 0.

Purge Control System Inspection

1. Start the engine.
2. Disconnect the vacuum hose between the purge solenoid valve and the charcoal canister.
3. Put a finger to the purge solenoid valve and verify that there is no vacuum applied when the engine is cold.
   - If there is a vacuum, inspect the following.
     — Wiring harness and connectors (Purge solenoid valve-PCM terminal 4U)
     — Purge solenoid valve
4. Warm up the engine to the normal operating temperature.
5. Stop the engine.
6. Connect WDS or equivalent to the DLC-2 and verify that the DTC P0443 is shown. Carry out DTC inspection. (See F–67 DTC TABLE.)
7. Turn the ignition switch to ON position.
8. Select ECT PID.
9. Verify that the engine coolant temperature is above **60°C {140°F}**.
   - If WDS or equivalent indicates below **60°C {140°F}**, carry out the ECT sensor inspection.
10. Select EVAPCP PID.
11. Increase the duty value of the purge solenoid valve to **50%** and inspect if the operation sound of the valve is heard.
    - If the operation sound is heard, inspect for the loose or damaged vacuum hose. (Intake manifold-purge solenoid valve-charcoal canister)
    - If the operation sound is not heard, carry out the purge solenoid valve inspection.

A/C Cut-off Control System Inspection

1. Start the engine.
2. Turn the A/C switch and fan switch on.
3. Verify that the A/C compressor magnetic clutch actuates.
   - If it does not actuate, go to symptom troubleshooting “No.23 A/C does not work sufficiently“.
4. Fully open the throttle valve and verify that the A/C compressor magnetic clutch does not actuate for **2—5 seconds**.
   - If it actuates, inspect as follows.

(1) Connect WDS or equivalent to the DLC-2.
(2) Turn the A/C switch off.
(3) Turn the ignition switch to ON position.
(4) Select ACCS PID.
(5) Turn the A/C relay from off to on and inspect if the operation sound of the relay is heard.
   - If the operation sound is heard, inspect TP PID.
   - If the operation sound is not heard, inspect following.
     — A/C relay
     — Open or short to GND circuit in wiring harness and connectors (Ignition switch-A/C relay-PCM terminal 4O)
     — A/C related parts

Cooling Fan Control System Inspection
L8, LF (General area) engine model

Cooling fan system operation

Engine condition	Cooling fan relay No.1	Cooling fan relay No.2
ECT below 100°C {212°F}	OFF	OFF
ECT above 100°C {212°F} (until below 97°C {207°F})	ON	OFF
ECT above 108°C {228°F} (until below 105°C {230°F})	ON	ON
A/C and fan switches are on.	ON	ON
ECT sensor malfunction	ON	ON

Cooling fan relay No.1

1. Connect WDS or equivalent to DLC-2.
2. Verify that ECT PID is below cooling fan operating temperature.
3. Verify that A/C switch and fan switch are off.
4. Turn the ignition switch to ON position.
5. Verify that the cooling fan is not operating.
   - If the cooling fan No.1 is operating:

(1) Select FAN3 PID.
(2) Send OFF and verify the cooling fan is off.
   - If the cooling fan is on, inspect the following.
     — Cooling fan relay stuck in closed position
     — Short to GND circuit between cooling fan relay and PCM terminal 4L
     — Short to power in circuit at cooling fan relay
     — DTC for ECT sensor (P0117, P0118)
   - If the cooling fan is off, inspect the following.
     — Short to GND circuit between refrigerant pressure switch and PCM terminal 1AC
     — DTC for ECT sensor (P0117, P0118)

6. Start the engine.
7. Verify that the cooling fan is operating when engine is hot.
   - If the cooling fan does not operate, perform the following.
     1. Connect WDS or equivalent to the DLC-2.
     2. Select FAN3 PID.
     3. Operate cooling fan by sending ON command.

4. Inspect if the operation sound is heard from the cooling fan relay.
   - If the operation sound is heard, inspect the wiring harness, connectors and cooling fan motor.
   - If the operation sound is not heard, inspect cooling fan relay and open circuit wiring harness and connectors.

8. Turn the A/C switch and fan switch on.
9. Verify that cooling fan is operating.
   - If fan does not operate, inspect A/C system.

Cooling fan relay No.2

1. Verify that A/C switch and fan switch are off.
2. Start the engine and let it idle.
3. Verify that the cooling fan No.2 is not operating.
   - If condenser fan is operating, inspect for the following.
     — Cooling fan relay No.2 is stuck in closed position.
     — Short to power in circuit between condenser fan relay and condenser fan
     — Short to GND in circuit between refrigerant pressure switch and PCM terminal 1AC
     — Short to GND circuit between condenser fan relay and PCM terminal 4B
4. Turn the A/C switch and fan switch on.
5. Verify that the cooling fan No.2 is operating and operation sound of A/C compressor magnetic clutch is heard.
6. Turn the A/C switch and fan switch off.
   - If the cooling fan No.2 does not operate but operation sound of A/C compressor magnetic clutch is heard, inspect for the following.
     — Open circuit between ignition switch and cooling fan relay No.2
     — Open circuit between battery and cooling fan relay No.2
     — Open circuit between cooling fan relay No.2 and PCM terminal 4B
     — Open circuit between cooling fan relay No.2 and cooling fan motor No.2 or fan motor GND
     — Cooling fan relay No.2 is stuck open.
     — Cooling fan motor No.2
   - If both cooling fan No.2 and A/C compressor do not operate, inspect the following.
     — TP PID
     — A/C system

L3 engine models
Cooling fan system operation (at idle)

Engine condition		Cooling fan relay No.1	Cooling fan relay No.2	Cooling fan relay No.3	Cooling fan relay No.4	Cooling fan motor No.1	Cooling fan motor No.2
Engine coolant temperature below 100°C {212°F}		OFF	OFF	OFF	OFF	OFF	OFF
Engine coolant temperature above 100°C {212°F} (until below 97°C {208°F})		OFF	ON	OFF	OFF	Low speed	Low speed
Engine coolant temperature above 108°C {233°F} (until below 105°C {208°F})		ON	ON	ON	ON	High speed	High speed
A/C and fan switches are on.	Refrigerant pressure switch (middle pressure) is off.	OFF	ON	ON	OFF	Low speed	High speed
	Refrigerant pressure switch (middle pressure) is on.	ON	ON	OFF	ON	High speed	Low speed
ECT sensor malfunction		ON	ON	ON	ON	High speed	High speed

1. Connect WDS or equivalent to DLC-2.
2. Verify that ECT PID is below cooling fan operating temperature.
3. Verify that the A/C switch and fan switch are off.
4. Start the engine and let it at idle.
5. Verify that the cooling fan and condenser fan are not operating.
   - If the cooling fan and condenser fan are operating low speed, inspect for following:
     — Short to GND circuit between PCM terminal 4L and cooling fan relay No.2
     — Cooling fan relay No.2 stuck in closed position
   - If the cooling fan and condenser fan are operating high speed, inspect for following:
     — DTC for ECT sensor (P0117, P0118)

- If the cooling fan is not operating and condenser fan is operating, inspect for following:
  - — Short to GND circuit between PCM terminal 4F and transfer relay
  - — Transfer relay stuck ON position
  - — Short to GND circuit between PCM terminal 4B and cooling fan relay No.3
  - — Condenser fan relay stuck ON

6. Start the engine.
7. Verify that the cooling fan and condenser fan are operating low speed when ECT PID is **above 100°C {212°F}**.
   - If the cooling fans does not operate, perform the following:
     1. Select FAN3 PID.
     2. Operate cooling fan relay No.2 by sending ON command.
     3. Inspect the operation sound is heard from cooling fan relay No.2.
        - — If the operation sound is heard, inspect wiring harnesses, connectors, transfer relay and cooling and condenser fan motor.
        - — If the operation sound is not heard, inspect cooling fan relay No.2 and open circuit between PCM terminal 4L and cooling fan relay No.2 wiring harness and connectors.
   - Inspect the cooling fan is operating high speed, inspect the following:
     - — Short to GND circuit between PCM terminal 4F and cooling fan relay No.4/cooling fan relay No.1.
     - — Cooling fan relay stuck closed position
   - If the condenser fan is operating high speed, inspect the following:
     - — Short to GND circuit between PCM terminal 4F and cooling fan relay No.4/cooling fan relay No.1
     - — cooling fan relay No.1 stuck ON position
8. Turn A/C switch and fan switch are on.
9. Verify that the ACCS PID is ON.
   - If the ACCS PID is not ON, inspect for following:
     - — A/C switch
     - — Fan switch
     - — Refrigerant pressure switch
     - — Open circuit PCM 1AC related harnesses and connectors
10. Access the COLP PID.
11. Verify that the cooling fan is operating high speed an condenser fan is operating low speed, while the COLP PID is ON.
    - If the cooling fan and condenser fan are operating low speed, perform the following:
      1. Select FAN1 PID.
      2. Operate cooling fan relay No.4 and transfer relay by sending ON command.
      3. Inspect the operation sound is heard from cooling fan relay No.4 and cooling fan relay No.1.
         - — If the operation sound is not heard from cooling fan relay No.4, inspect cooling fan relay No.4 and open circuit between PCM 4F and cooling fan relay No.4 wiring harnesses and connectors.
         - — If the operation sound is not heard from cooling fan relay No.1, inspect cooling fan relay No.1 and between PCM terminal 4F and cooling fan relay No.1 wiring harnesses and connector.
         - — If the operation sound is heard from cooling fan relay No.4 and cooling fan relay No.1, inspect wiring harnesses and connectors.
    - If the cooling fan motor No.2 does not operate, perform the following:
      - — Cooling fan motor No.2 and related wiring harnesses and connectors
12. Verify that the cooling fan motor No.1 is operating low speed and the cooling fan motor No.1 is operating high speed, while the COLP PID is OFF.
    - If the cooling fan motor No.1 and cooling fan motor No.2 are operating low seed, perform the following:
      1. Select FAN1 PID.
      2. Operate cooling fan relay 3 by sending ON command.
      3. Inspect the operation sound is heard from cooling fan relay No.3.
         - — If the operation sound is heard, inspect wiring harnesses and connectors.
         - — If the operation sound is not heard, inspect coooling fan relay No.3 and open circuit wiring harnesses and connectors between PCM terminal 4B and coooling fan relay No.3.

L8, LF (Intensely hot area) engine models
Cooling fan system operation (at idle)

Engine condition		Cooling fan relay No.2	Cooling fan relay No.4	Cooling fan relay No.1	Cooling fan relay No.3	Cooling fan motor No.1	Cooling fan motor No.2
Engine coolant temperature below 100°C {212°F}		OFF	OFF	OFF	OFF	OFF	OFF
Engine coolant temperature above 100°C {212°F} (until below 97°C {208°F})		ON	OFF	OFF	OFF	Low speed	OFF
Engine coolant temperature above 108°C {233°F} (until below 105°C {208°F})		ON	ON	ON	ON	High speed	High speed
A/C and fan switches are on.	Refrigerant pressure switch (middle pressure) is off.	ON	OFF	OFF	ON	Low speed	OFF
	Refrigerant pressure switch (middle pressure) is on.	ON	ON	ON	OFF	High speed	Low speed
ECT sensor malfunction		ON	ON	ON	ON	High speed	High speed

1. Connect WDS or equivalent to DLC-2.
2. Verify that ECT PID is below cooling fan operating temperature.
3. Verify that the A/C switch and fan switch are off.
4. Start the engine and let it at idle.
5. Verify that the cooling fans fan are not operating.
   - If the cooling fan is operating low speed, inspect for following:
     — Short to GND circuit between PCM terminal 4L and cooling fan relay No.2
     — Cooling fan relay No.2 stuck in closed position
   - If the cooling fans are operating high speed, inspect for following:
     — DTC for ECT sensor (P0117, P0118)
   - If the cooling fan motor No.1 is not operating and cooling fan motor No.2 is operating, inspect for following:
     — Short to GND circuit between PCM terminal 4F and cooling fan relay No.1
     — Cooling fan relay No.1 stuck ON
     — Short to GND circuit between PCM terminal 4B and cooling fan relay No.3
     — Cooling fan relay No.3 stuck ON
6. Start the engine.
7. Verify that the cooling fans are operating low speed when ECT PID is **above 100°C {212°F}**.
   - If the cooling fan motor No.1 does not operate, perform the following:
     1. Select FAN3 PID.
     2. Operate cooling fan relay No.2 by sending ON command.
     3. Inspect the operation sound is heard from cooling fan relay No.2.
        — If the operation sound is heard, inspect wiring harnesses, connectors and cooling fan motor No.1.
        — If the operation sound is not heard, inspect cooling fan relay No.2 and open circuit between PCM terminal 4L and cooling fan relay No.2 wiring harness and connectors.
   - Inspect the cooling fan is operating high speed, inspect the following:
     — Short to GND circuit between PCM terminal 4F and cooling fan relay No.1/cooling fan relay No.4.
8. Turn A/C switch and fan switch are on.
9. Verify that the ACCS PID is ON.
   - If the ACCS PID is not ON, inspect for following:
     — A/C switch
     — Fan switch
     — Refrigerant pressure switch
     — Open circuit PCM 1AC related harnesses and connectors
10. Access the COLP PID.
11. Verify that the cooling fan motor No.1 is operating high speed and cooling fan motor No.2 is operating low speed, while the COLP PID is ON.
    - If the cooling fan motor No.1 does not operate high speed, perform the following:
      1. Select FAN1 PID.
      2. Operate cooling fan relay No.1 and cooling fan relay No.4 by sending ON command.

F

3. Inspect the operation sound is heard from cooling fan relay No.1 and cooling fan relay No.4.
   — If the operation sound is not heard from cooling fan relay No.4, inspect cooling fan relay No.4 and open circuit between PCM 4F and cooling fan relay No.4 wiring harnesses and connectors.
   — If the operation sound is not heard from cooling fan relay No.1, inspect cooling fan relay No.1 and between PCM terminal 4F and cooling fan relay No.1 wiring harnesses and connector.
   — If the operation sound is heard from cooling fan relay No.1 and cooling fan relay No.4, inspect wiring harnesses and connectors.

- If the cooling fan motor No.2 does not operate, perform the following:
  — Inspect cooling fan motor No.2 and related wiring harnesses and connectors
- If the cooling fan motor No.2 does not operate, perform the following:
  1. Select FAN2 PID.
  2. Operate cooling fan relay No.3 by sending ON command.
  3. Inspect the operation sound is heard from cooling fan relay No.3.
     — If the operation sound is heard, inspect wiring harnesses and connectors.
     — If the operation sound is not heard, inspect cooling fan relay No.3 and open circuit wiring harnesses and connectors between PCM terminal 4B and cooling fan relay No.3.

Variable Air Duct (VAD) Control System Operation Inspection (L3 Engine Models)

1. Connect WDS or equivalent to DLC-2.
2. Access ECT, TP and RPM PIDs.
3. Start the engine.
4. Verify ECT PID is **70°C {158°F} or over**.
5. Inspect shutter valve operation following condition.

VAD shutter valve operation

Engine speed	5,800 rpm with TP PID 50% or over	
	Below	Above
Shutter valve	Close	Open

- If the shutter valve operation is not specified, inspect as follows.

(1) Verify that DTC P1410 is not displayed.
- If DTC P1410 is shown, carry out DTC inspection.
  (See F–67 DTC TABLE.)

(2) Turn ignition switch to ON.

(3) Turn the VAD control solenoid valve from on to off using the VAD PID and verify that operation sound of the solenoid valve is heard.
- If the operation sound is heard, inspect the following.
  — Vacuum hose looseness or damage
  — Vacuum chamber crack or damage
  — Shutter valve actuator.
  (See F–12 VARIABLE AIR DUCT (VAD) SHUTTER VALVE INSPECTION (L3).)
- Shutter valve stuck open or close
  — If the operation sound is not heard, inspect following.
  — VAD control solenoid valve.
  (See F–13 VARIABLE AIR DUCT (VAD) CONTROL SOLENOID VALVE INSPECTION (L3).)

Variable Valve Timing Control System Operation Inspection
When idling cannot be continued

1. Remove the oil control valve (OCV) and verify that the spool valve is at maximum retard position.
2. If the spool valve is stuck in advance direction, replace the oil control valve (OCV).
3. Connect the oil control valve (OCV).
4. Turn the ignition switch on.
5. Verify that the spool valve is at maximum retard position.
6. If the spool valve is stuck in advance direction, inspect for the following.
   - Short circuit in harnesses or connectors between the oil control valve (OCV) and the PCM.
7. Inspect the variable valve timing actuator.

When idling can be continued

1. Warn up the engine.
2. Connect WDS or equivalent to DLC-2.
3. Idle the engine.
4. Select VT DUTY1 PID.
5. Set the oil control valve (OCV) duty valve to 100% and verify that the engine idles roughly or stalls.
   - If as specified, inspect the timing belt component (valve timing deviation).
   - If not as specified, go to next step.
6. Remove the oil control valve (OCV) and connect the oil control valve (OCV) connector to the oil control valve (OCV).
7. Turn ignition switch to ON.
8. Select VT DUTY1 PID.
9. Set the oil control valve (OCV) duty value to 100% and verify that the spool valve operates in the advance direction.
10. If not as specified, inspect the following.
    - Oil control valve (OCV) operation.
    - Harnesses and connectors between the oil control valve (OCV) and the PCM for open or short.
11. Inspect the following hydraulic passages for clogging and/or leakage.
    - Oil pressure switch—oil control valve (OCV)
    - Oil control valve (OCV)—camshaft
    - Camshaft internal passage
12. If they are okay, replace the intake camshaft pulley (with a built-in variable valve timing actuator).

ENGINE ELECTRICAL SYSTEM

LOCATION INDEX G-2
LOCATION INDEX G-2
CHARGING SYSTEM G-3
BATTERY REMOVAL/INSTALLATION G-3
BATTERY INSPECTION G-4
BATTERY RECHARGING G-5
GENERATOR REMOVAL/INSTALLATION G-6
GENERATOR INSPECTION G-7
IGNITION SYSTEM G-8
IGNITION COIL REMOVAL/INSTALLATION G-8
IGNITION COIL INSPECTION G-9
SPARK PLUG REMOVAL/INSTALLATION G-10
SPARK PLUG INSPECTION G-11
HIGH-TENSION LEAD REMOVAL/INSTALLATION G-11
STARTING SYSTEM G-12
STARTER REMOVAL/INSTALLATION G-12
STARTER INSPECTION G-13

LOCATION INDEX

LOCATION INDEX

A6E470001002W01

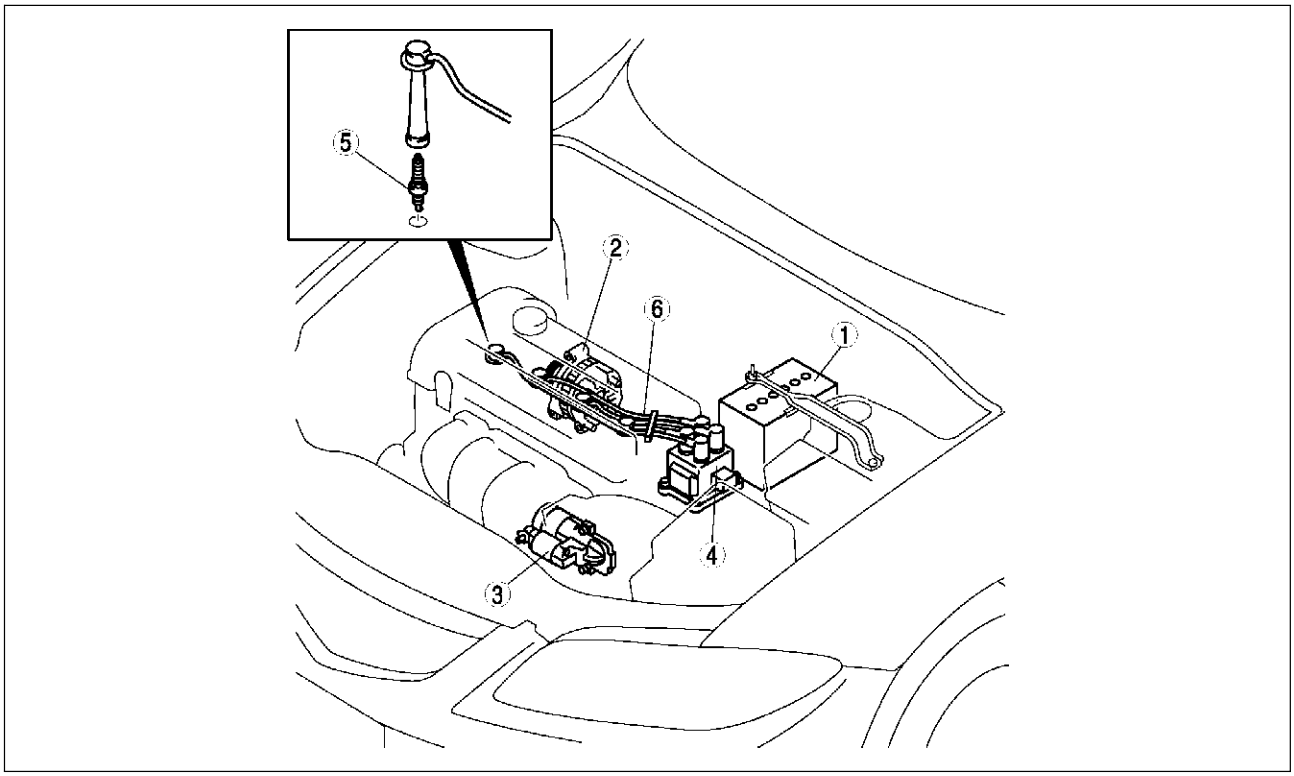

AME4700W001

1	Battery (See G–3 BATTERY REMOVAL/INSTALLATION) (See G–4 BATTERY INSPECTION) (See G–5 BATTERY RECHARGING)
2	Generator (See G–6 GENERATOR REMOVAL/INSTALLATION) (See G–7 GENERATOR INSPECTION)
3	Starter (See G–12 STARTER REMOVAL/INSTALLATION) (See G–13 STARTER INSPECTION)

4	Ignition coil (See G–9 IGNITION COIL INSPECTION)
5	Spark plug (See G–10 SPARK PLUG REMOVAL/INSTALLATION) (See G–11 SPARK PLUG INSPECTION)
6	High-tension lead (See G–11 HIGH-TENSION LEAD REMOVAL/INSTALLATION)

CHARGING SYSTEM

BATTERY REMOVAL/INSTALLATION

A6E471018520W01

1. Remove in the order indicated in the table.
2. Install in the reverse order of removal.

1	Negative battery cable
2	Battery cable
3	Battery clamp
4	Battery
5	Battery tray

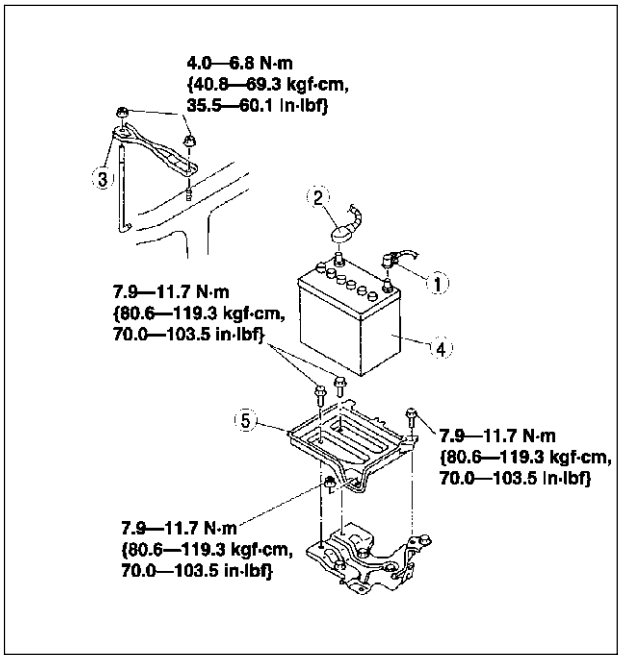

A6E4710W002

G

BATTERY INSPECTION

A6E471018520W02

Battery

1. Inspect the battery in the following procedure.

Step	Inspection	Result	Action
1	Measure open circuit voltage of battery.	More than 12.4 V	Go to Step 3.
		Less than 12.4 V	Go to next step.
2	Quick charge for 30 min. and recheck voltage.	More than 12.4 V	Go to next step.
		Less than 12.4 V	Replace battery.
3	Apply load current (see load test chart) to battery using a battery load tester and record battery voltage after 15 s. Is voltage more than specification?	Yes	Battery is okay.
		No	Replace battery.

Test load chart

Battery	Load (A)
46B24DLS	135
50D20L	150
75D26L	195
80D26L	195

Battery positive voltage with load

Approximate battery temperature	Min. voltage (V)
21 °C {70 °F}	9.6
16 °C {61 °F}	9.5
10 °C {50 °F}	9.4
4 °C {39 °F}	9.3
–1 °C {30 °F}	9.1
–7 °C {19 °F}	8.9
–12 °C {10 °F}	8.7
–18 °C {0 °F}	8.5

Back-up Current

1. Verify that the engine switch is at OFF and that the key has been removed.
2. Disconnect the negative battery cable.
3. Measure the back-up current between the negative battery terminal and the negative battery cable.
   - If the current exceeds the maximum, remove the fuses in the main fuse block and the fuse block one by one while measuring the back-up current.
     — Inspect and repair harnesses and connectors of the fuse at which the current decreases.

Back-up current
20 mA max.

Caution
- **Operating electrical loads while measuring the back-up current can damage the circuit tester.**

BATTERY RECHARGING

A6E471018520W03

Warning

- **Keep any flammable away from the battery, otherwise evaporated gas of the battery fluid may catch fire, and cause serious injury or death.**

Caution

- **When removing the battery, disconnect the negative battery cable first and install it last to prevent damage to electrical components or the battery.**

1. Place a battery in a pan of water to prevent it from overheating.
2. The water level should come up about halfway on the battery.
3. Remove the battery plugs while charging the battery.
4. Keep water off the top of the battery.

Caution

- **To prevent damage to electrical components or the battery, turn all accessories off and stop the engine before performing maintenance or recharging the battery.**

5. Connect a battery charger to the battery.
6. Adjust the charging current as follows.

Battery type (5-hour rate)	Slow charge (A)	Quick charge (A / 30 min.)
46B24LS (36)	3.5—4.5	25
50D20L (40)	4.0—5.0	25
75D26L (52)	5.0—6.0	35
80D26L (55)	5.5—6.5	35

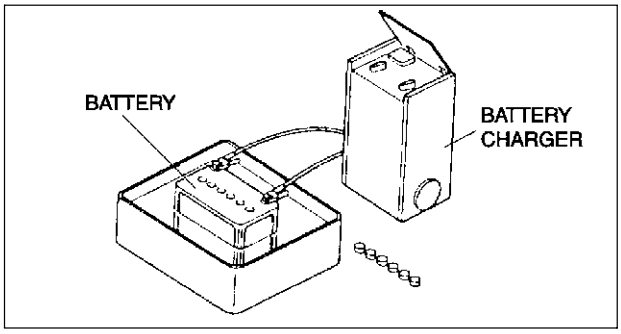

AME4710W001

GENERATOR REMOVAL/INSTALLATION

A6E471018300W01

Warning

- **When the battery cables are connected, touching the vehicle body with generator terminal B will generate sparks. This can cause personal injury, fire, and damage to the electrical components. Always disconnect the battery negative cables before performing the following operation.**

Caution

- **The generator can be damaged by the heat from the exhaust manifold. Make sure the generator duct and the generator heat insulator are installed securely.**

1. Disconnect the negative battery cable.
2. Remove the under cover.
3. Remove the drive belt. (See B–3 DRIVE BELT REPLACEMENT.)
4. Remove in the order indicated in the table.
5. Install in the reverse order of removal.

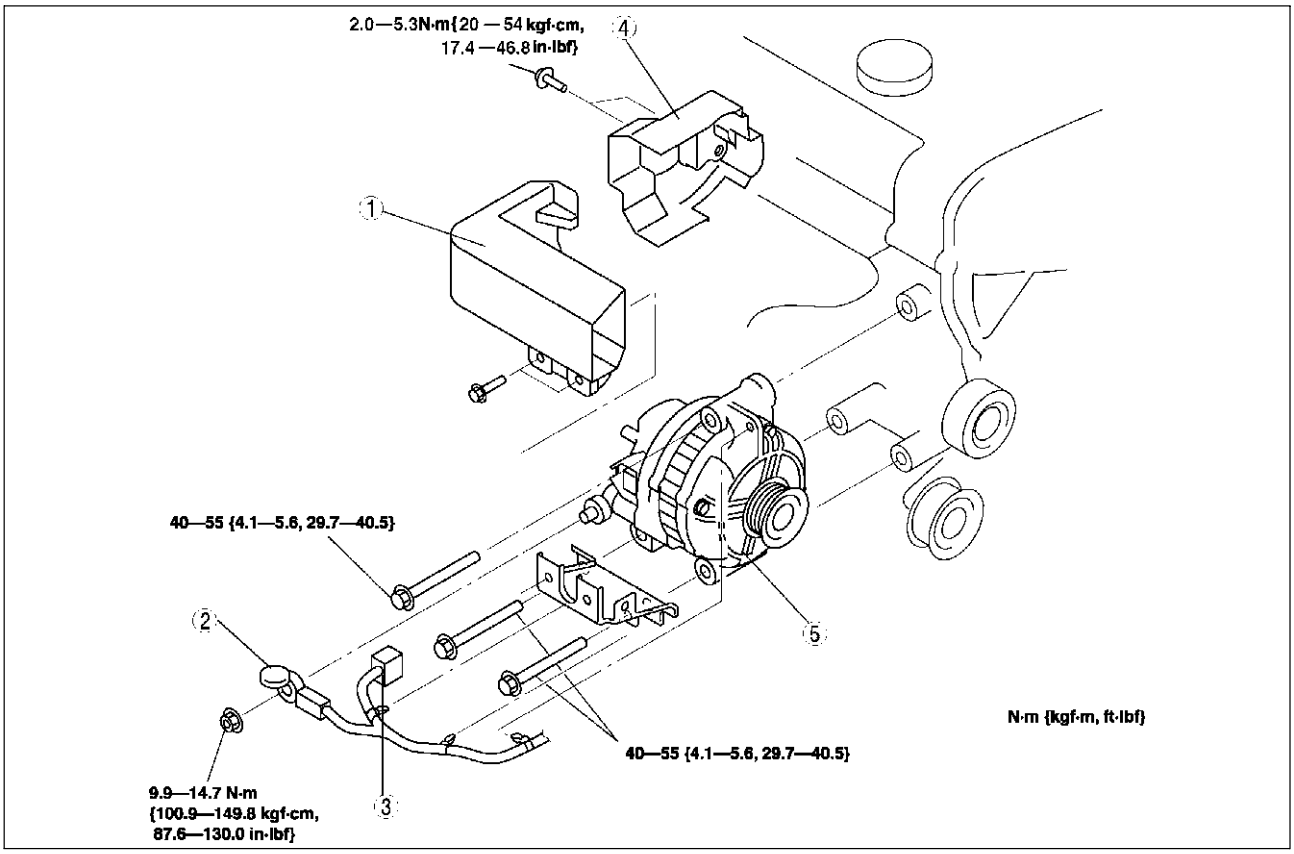

AME4710W002

1	Generator duct
2	B terminal cable
3	Generator connector

4	Generator heat insulator
5	Generator (See G–6 Generator Removal Note)

Generator Removal Note

1. Remove the generator from above.

GENERATOR INSPECTION

A6E471018300W02

Generator Warning Light

1. Verify that the battery is fully charged.
   - Charge if necessary.
2. Verify that the drive belt deflection/tension is correct. (See B–3 DRIVE BELT INSPECTION.)
   - If not as specified, replace the drive belt.
3. Turn the ignition switch to ON and verify that the generator warning light illuminates.
   - If not as specified, inspect the generator warning light.
4. Verify that the generator warning light turns off after the engine is started.
   - If not specifed, inspect if any of the DTCs are displayed: P0112, P0113, P2502, P2503, P2504.

Generator

Voltage

1. Verify that the battery is fully charged.
2. Verify that the drive belt deflection/tension is correct. (See B–3 DRIVE BELT INSPECTION.)
   - If not as specified, replace the drive belt.
3. Turn off all electrical loads.
4. Turn the engine switch to start the engine and verify that the generator rotates smoothly without any noise while the engine is running.
5. Measure the voltage at the terminals shown in the table.
   - If not as specified, repair or replace the generator as necessary.

Standard voltage

Terminal	Ignition switch ON (V)	Idle (V) [20 °C {68 °F}]
B	B+	13—15
P	Approx. 1	Approx. 3—8
D	Approx. 0	*

*: Turn the following electrical loads on and verify that the voltage reading increases.
- — Headlights
- — Blower motor
- — Rear window defroster

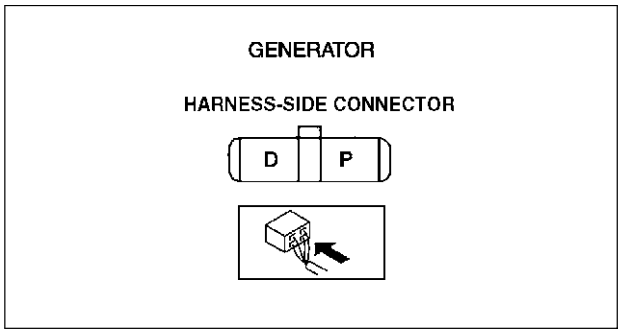

A6E4710W003

Current

1. Verify that the battery is fully charged.
   - If the battery is not fully charged, charge the battery.
2. Verify that the drive belt deflection/tension is correct. (See B–3 DRIVE BELT INSPECTION.)
   - If not as specified, replace the drive belt.
3. Disconnect the negative battery cable.
4. Connect an ammeter, capable of reading 120 A or above, between generator terminal B and the wiring harness.
5. Connect the negative battery cable.
6. Turn off all electrical loards.
7. Start the engine and increase the engine speed to **2,000—2,500 rpm**.
8. Turn the following electrical loads on and verify that the current reading increases.
   - Headlights
   - Blower motor
   - Rear window defroster
     - — If generator terminal B current will not increase, repair or replace the generator as necessary.

Note
- Current required for generating power varies with electrical loads applied.

Standard current (Reference)

Measuring conditions
Room temperature: 20 °C {68 °F}
Voltage: 13.5 V
Engine hot

Engine speed (rpm)	Terminal B current (A)		
	L8	LF	L3
1,000	0*—80		
2,000	0*—90		

* : Must not be 0 A

IGNITION SYSTEM

IGNITION COIL REMOVAL/INSTALLATION

A6E471218110W01

1. Disconnect the negative battery cable.
2. Remove the plug hole plate.

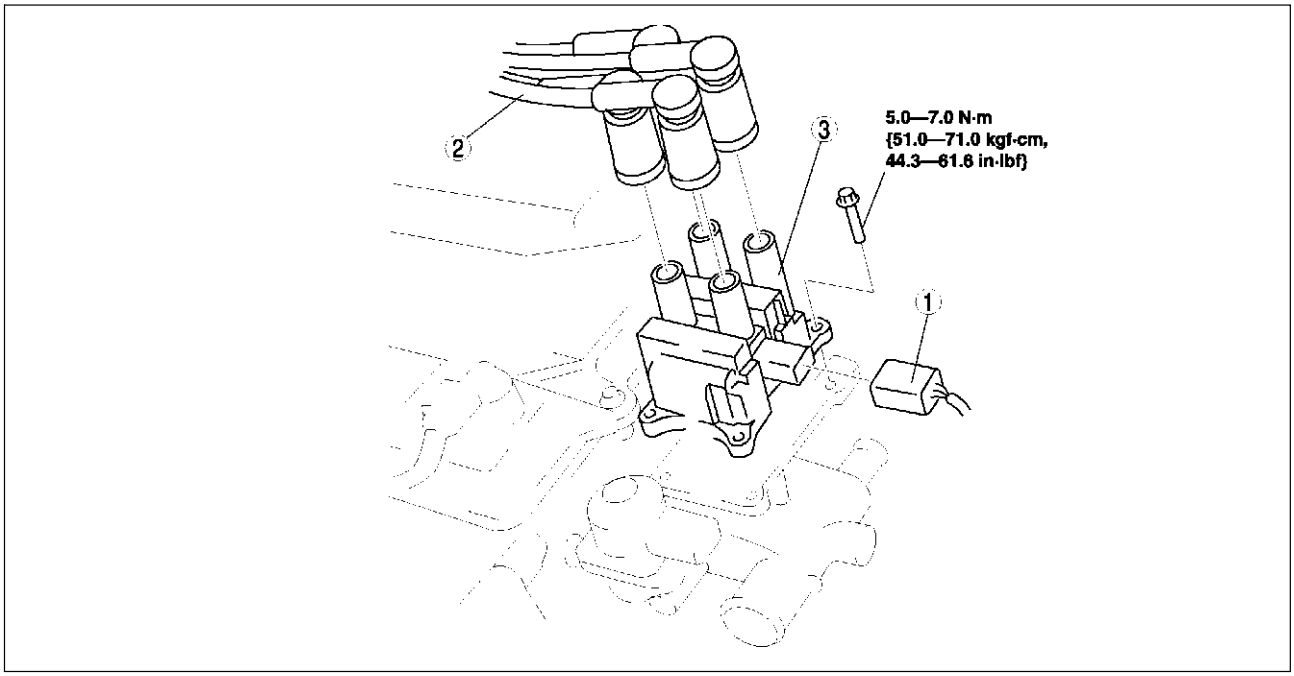

A6E4712W012

1	Connect
2	High-tension lead (See G–11 HIGH-TENSION LEAD REMOVAL/INSTALLATION)

3	Ignition coil

IGNITION COIL INSPECTION

Primary Coil Winding

1. Remove the ignition coil.
2. Measure the resistance between the following lead holes using an ohmmeter.
   - A and B, B and C
     — If not specified, replace the ignition coil.

Specification
0.49—0.57 ohms [20°C {68°F}]

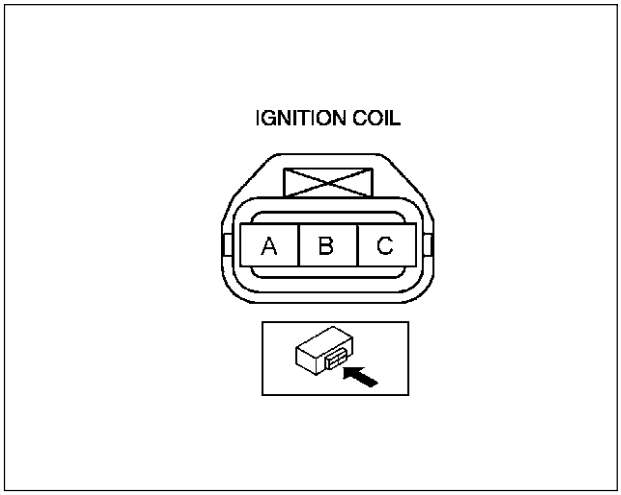

A6E4712W003

Secondary Coil Winding

1. Remove the ignition coil.
   - 1 and 4
   - 2 and 3
     — If not specified, replace the ignition coil.

Specification
9.5—11.1kilohms

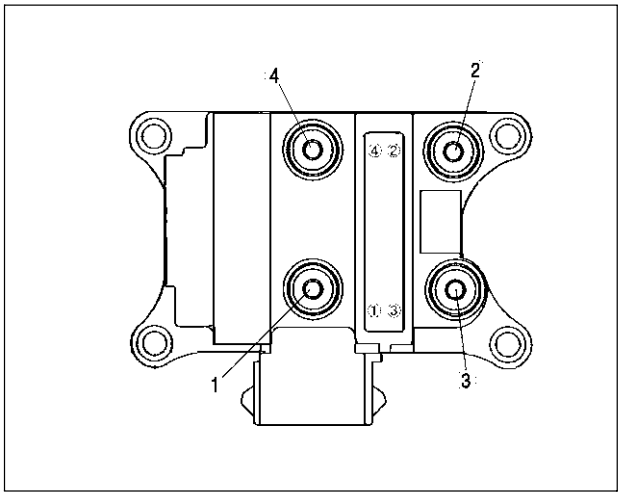

A6E4712W001

Insulation Resistance of Case

1. Disconnect the high-tension lead.
2. Disconnect the ignition coil connector.
3. Measure the insulation resistance between the following terminals and ignition coil case using an ohmmeter.

- Terminal B and ignition coil case.
  — If not specified, replace the ignition coil.

Specification
Above 10 Megohm

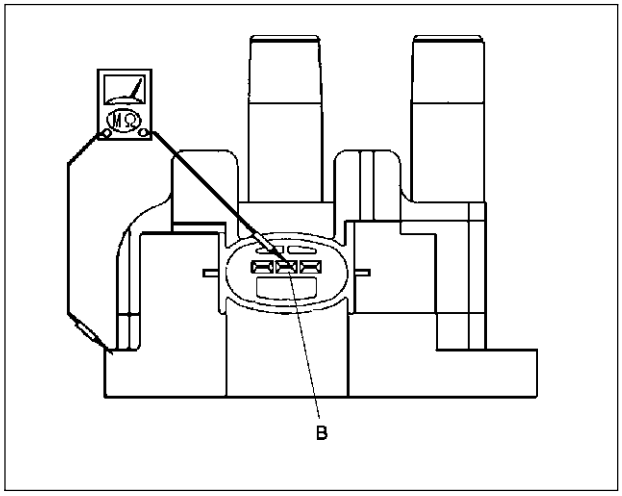

A6E4712W002

SPARK PLUG REMOVAL/INSTALLATION

A6E471218110W03

1. Disconnect the negative battery cable.
2. Remove the plug hoie plate.
   - Lift off and remove the plug hole plate from the installation areas (rubber and clips) as shown in the figure.

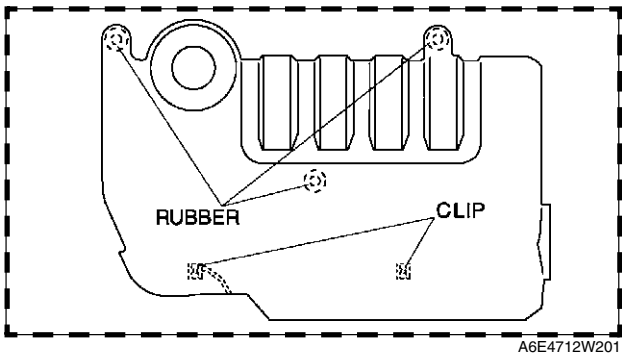

A6E4712W201

3. Disconnect the high-tension lead.
4. Remove the spark plugs using the plug-wrench.
5. Install the spark plugs using a plug-wrench.

Tightening torque:
10—24 N·m {1.1—2.4kgf·m, 8—17ft·lbf}

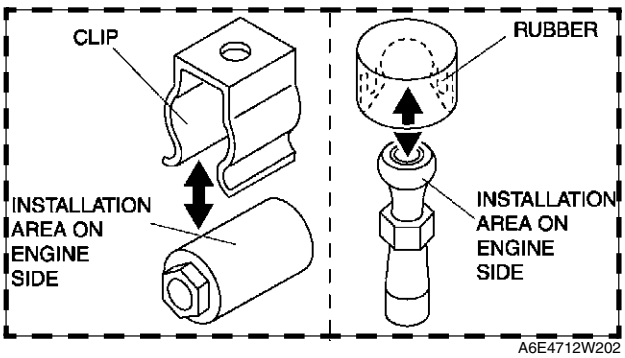

A6E4712W202

6. Install the plug hole plate.

Caution
- **If the plug hole plate interferes with metal clips and the accelerator cable, the cable could be damaged, so when installing follow the procedure below.**

(1) To position the plug hole plate, grasp the rubber 1 and 2, as shown in the figure, with your hands and press them in.

(2) Route the accelerator cable more towards the center of the plug hole plate underside to avoid the rib area as shown in the figure.
(3) Grasp rubber 3 with your hand and press it in.
(4) Grasp clips 4 and 5 with your hands and press them in.

7. Connect the negative battery cable.

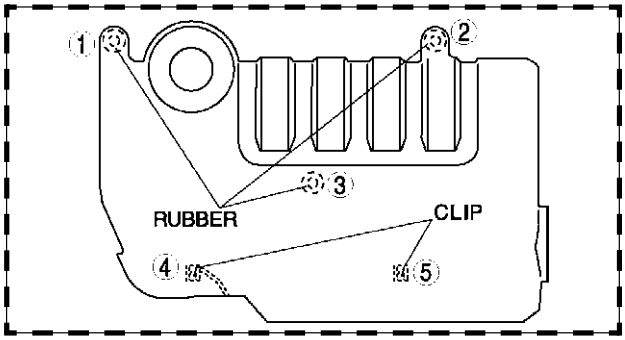

A6E4712W203

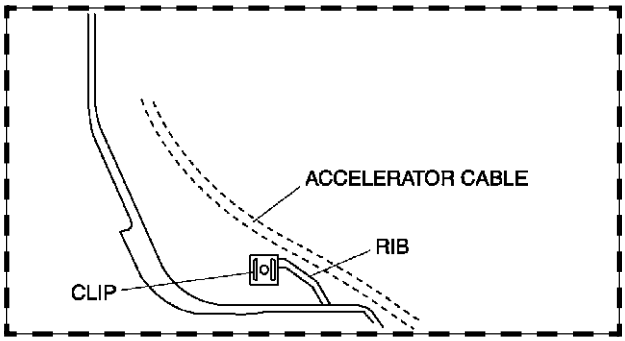

A6E4712W204

G

SPARK PLUG INSPECTION

A6E471218110W04

Caution
- **Do not inspect, adjust, or clean the plug gap with a wire brush. Doing so can damage the platinum tip.**
- **When cleaning a spark plug with a plug clear, clean the plug quickly for less than 20 seconds with air pressure below 58.8 kpa {6.0 kgf/cm, 8.5 psi}. Verify that there is no carbon, sand, etc. in the spark plug after cleaning.**

HIGH-TENSION LEAD REMOVAL/INSTALLATION

A6E471218110W05

Caution
- **The high-tension leads must be reinstalled to their original position.Incorrect installation can damage the leads and cause power loss, and negatively affect the electronic components.**

1. Disconnect the negative battery cable.
2. Remove the plug hole plate.
3. Remove the high-tension lead.
4. Install the high-tension lead.

STARTING SYSTEM

STARTER REMOVAL/INSTALLATION

A6E471418400W01

Warning

- **When the battery cables are connected, touching the vehicle body with starter terminal B will generate sparks. This can cause personal injury, fire, and damage to the electrical components. Always disconnect the battery negative cables before performing the following operation.**

1. Disconnect the negative battery cable.
2. Remove the under cover.
3. Remove the air cleaner assembly.(See F–10 INTAKE-AIR SYSTEM REMOVAL/INSTALLATION.)
4. Remove the clutch release cylinger.(MTX) (See H–9 CLUTCH RELEASE CYLINDER REMOVAL/INSTALLATION.)
5. Remove in the order indicated in the table.
6. Install in the reverse order of removal.

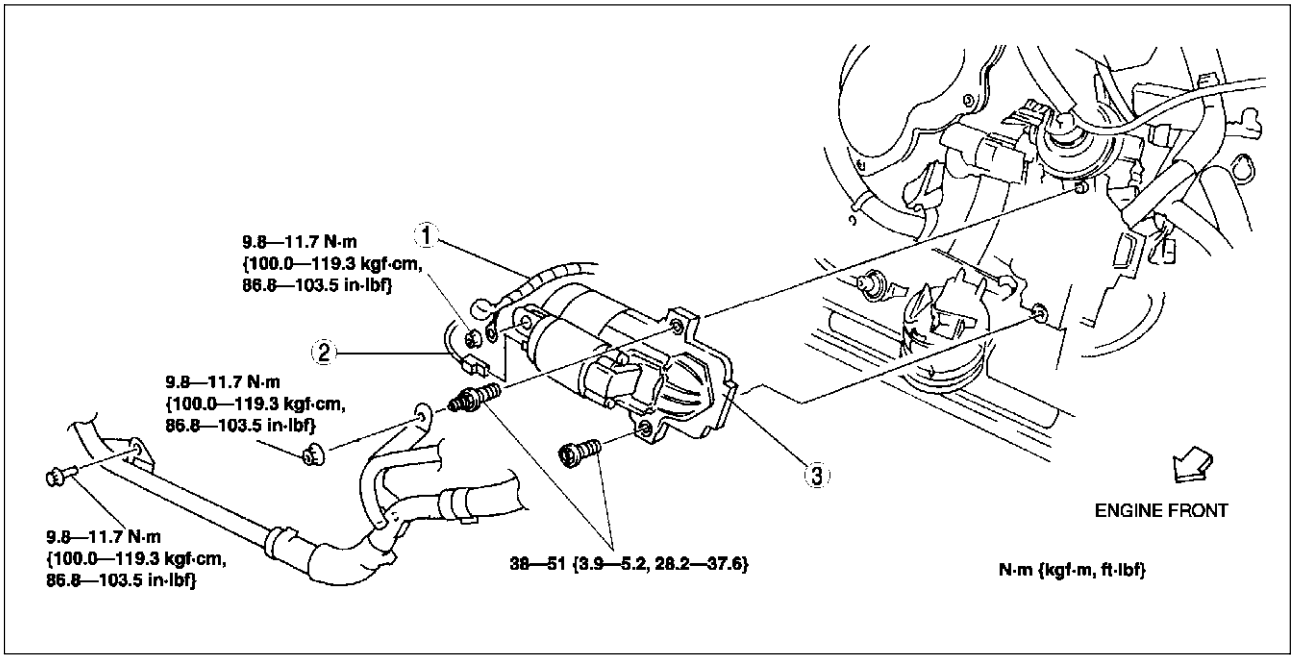

AME4714W001

1	Terminal B wire
2	Terminal S wire

3	Starter

STARTER INSPECTION

A6E471418400W02

On-vehicle Inspection

1. Verify that the battery is fully charged.
2. Crank the engine and verify that the starter rotates smoothly without any noise.
   - If not, inspect the following.
     — Remove the starter and inspect the magnetic switch and the starter.
     — Inspect the related wiring harness and the ignition switch.

No Load Test

1. Verify that the battery is fully charged.
2. Connect the starter, battery, voltmeter and ammeter as shown.
3. Operate the starter and verify that it rotates smoothly.
4. Measure the voltage and current while the starter is operating.
   - If not as specified, replace the starter.

Specification

Voltage (V)	Current (A)
11	Less than 90

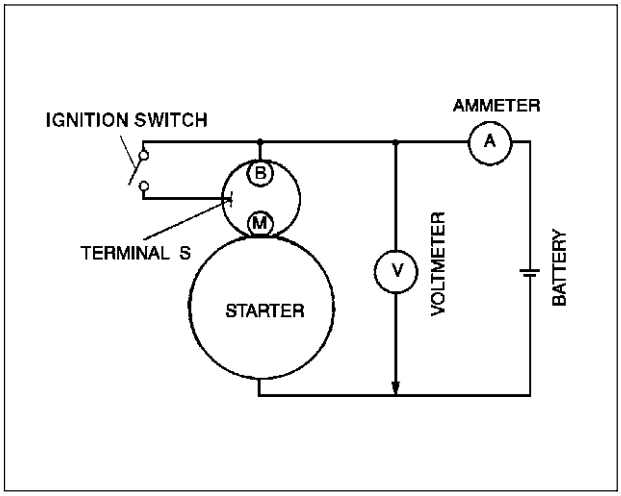

AME4714W002

CLUTCH

LOCATION INDEX H-2
CLUTCH LOCATION INDEX H-2
GENERAL PROCEDURES H-3
PRECAUTION (CLUTCH) H-3
CLUTCH FLUID H-4
CLUTCH FLUID INSPECTION H-4
CLUTCH FLUID REPLACEMENT H-4
CLUTCH PEDAL H-5
CLUTCH PEDAL ADJUSTMENT H-5
CLUTCH PEDAL REMOVAL/INSTALLATION H-6
CLUTCH MASTER CYLINDER H-7
CLUTCH MASTER CYLINDER REMOVAL/ INSTALLATION H-7
CLUTCH MASTER CYLINDER DISASSEMBLY/ ASSEMBLY H-8
CLUTCH RELEASE CYLINDER H-9
CLUTCH RELEASE CYLINDER REMOVAL/ INSTALLATION H-9
CLUTCH RELEASE CYLINDER DISASSEMBLY/ ASSEMBLY H-10
CLUTCH UNIT H-11
CLUTCH UNIT REMOVAL/INSTALLATION H-11
CLUTCH COVER INSPECTION H-13
CLUTCH DISC INSPECTION H-14
CLUTCH RELEASE COLLAR INSPECTION H-14
FLYWHEEL H-15
FLYWHEEL INSPECTION H-15

LOCATION INDEX

CLUTCH LOCATION INDEX

A6E490001036W01

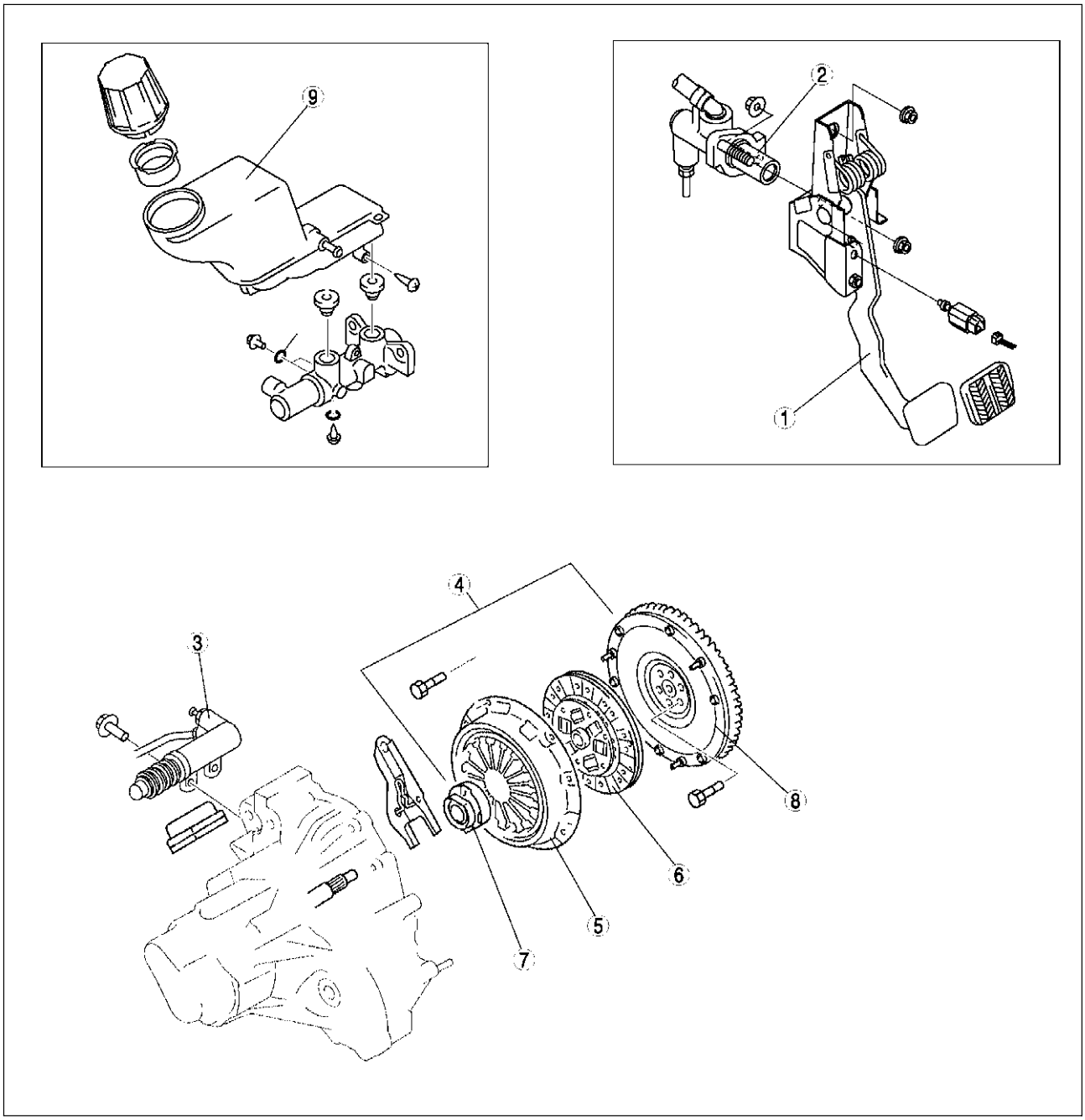

A6E4900W001

1	Clutch pedal (See H–5 CLUTCH PEDAL ADJUSTMENT) (See H–6 CLUTCH PEDAL REMOVAL/INSTALLATION)
2	Clutch master cylinder (See H–7 CLUTCH MASTER CYLINDER REMOVAL/INSTALLATION) (See H–8 CLUTCH MASTER CYLINDER DISASSEMBLY/ASSEMBLY)

3	Clutch release cylinder (See H–9 CLUTCH RELEASE CYLINDER REMOVAL/INSTALLATION) (See H–10 CLUTCH RELEASE CYLINDER DISASSEMBLY/ASSEMBLY)
4	Clutch unit (See H–11 CLUTCH UNIT REMOVAL/INSTALLATION)
5	Clutch cover (See H–13 CLUTCH COVER INSPECTION)

6	Clutch disc (See H–14 CLUTCH DISC INSPECTION)
7	Clutch release collar (See H–14 CLUTCH RELEASE COLLAR INSPECTION)
8	Flywheel (See H–15 FLYWHEEL INSPECTION)
9	Clutch fluid (See H–4 CLUTCH FLUID INSPECTION) (See H–4 CLUTCH FLUID REPLACEMENT)

GENERAL PROCEDURES

PRECAUTION (CLUTCH)

A6E491016003W01

Clutch Pipe Removal/Installation

Note
- A common reservoir is used for the clutch and brake system fluid.

1. If clutch pipes have been disconnected any time during the procedure, add clutch fluid (brake fluid), bleed the air, and inspect for leakage after the procedure has been completed.
2. Remove the clutch pipe using the **SST** (49 0259 770B). Install the clutch pipe using torque wrench **SST** combination. (See GI–16 TORQUE FORMULAS.)

CLUTCH FLUID

CLUTCH FLUID INSPECTION

A6E491216010W01

Note
- A common reservoir is used for the clutch and brake system fluid.
- The fluid in the reservoir must be maintained between the MIN/MAX level during replacement.

CLUTCH FLUID REPLACEMENT

A6E491216010W02

Caution
- **Be careful not to spill clutch fluid on a painted surface. If this should happen, wash it off immediately.**

Note
- Do not mix different brands of clutch fluid.
- Do not reuse the clutch fluid that was drained out.

1. Remove the under cover.
2. Draw the fluid from the reservoir with a suction pump.
3. Remove the bleeder cap from the clutch release cylinder and attach a vinyl hose to the bleeder plug.
4. Place the other end of the vinyl hose into a container.
5. Slowly pump the clutch pedal several times.
6. With the clutch pedal depressed, loosen the bleeder screw using the **SST** to let fluid escape.
7. Tighten the bleeder screw using the **SST** to stop the fluid.
8. Repeat Steps 4 and 5 until only clean fluid is seen.
9. Tighten the bleeder screw.

   Tightening torque
   5.9—8.8 N·m {60—90 kgf·cm, 53—78 in·lbf}

10. Add fluid to the MAX mark.
11. Install the under cover.
12. Verify the correct clutch operation.

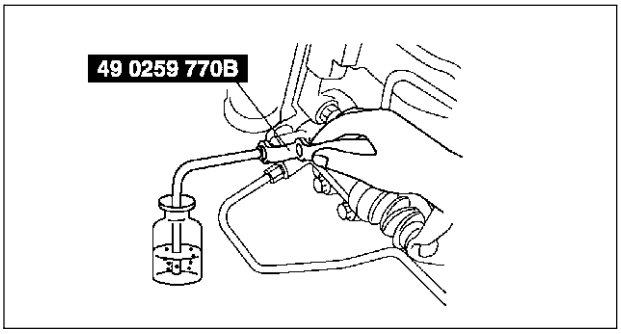

A6E4912W001

CLUTCH PEDAL

CLUTCH PEDAL ADJUSTMENT

A6E491441030W01

Clutch Pedal Height

1. Measure the distance from the upper surface of the pedal pad to the carpet.
   - If not as specified, adjust the pedal height by turning adjustment bolt B and locknut A.

Pedal height(with carpet)
L.H.D.: 210—216 mm {8.27—8.50 in}
R.H.D.: 209—215 mm {8.23—8.46 in}

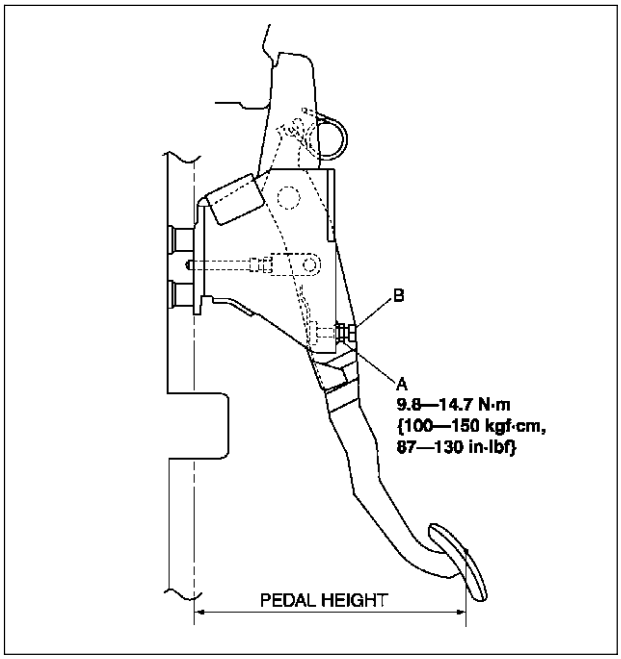

A6E4914W001

Clutch Pedal Free Play

1. Depress the clutch pedal by hand until clutch resistance is felt, and measure the pedal free play.
   - If not as specified, adjust the pedal free play by loosening locknut C and turning push rod D as necessary.

Pedal free play
1.0—3.0 mm {0.04—0.11 in}

Push rod free play at clutch pedal
0.1—0.5 mm {0.004—0.02 in} (Reference value)

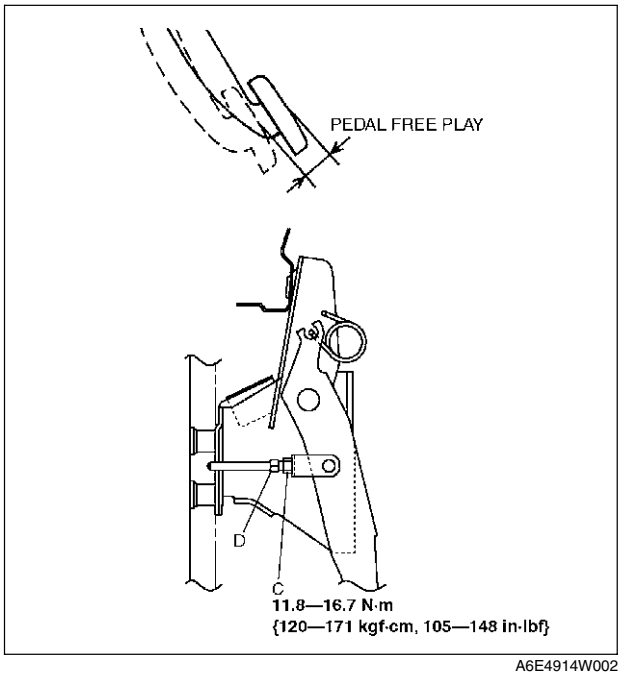

A6E4914W002

Clutch Pedal Disengagement Point

1. Apply the parking brake and fix the front and rear of the wheels with the wheel chocks.
2. Start the engine at idle.
3. Without depressing the clutch pedal, move the shift lever slowly to the reverse position.
4. Hold the lever when the gear noise is heard.
5. Depress the clutch pedal slowly.

6. Hold the pedal when the gear noise stops (clutch pedal disengagement point).
7. Measure distance A (the distance from the clutch pedal disengagement point to the fully depressed position) and the pedal stroke.
8. Verify that they are within specification.
   - If distance A or the pedal stroke is out of specification, adjust the pedal height or the clutch pedal free play to specification.

Clutch pedal disengagement stroke
Minimum: 20 mm {0.79 in} (Reference value)

Pedal stroke
140.0 mm {5.51 in} (Reference value)

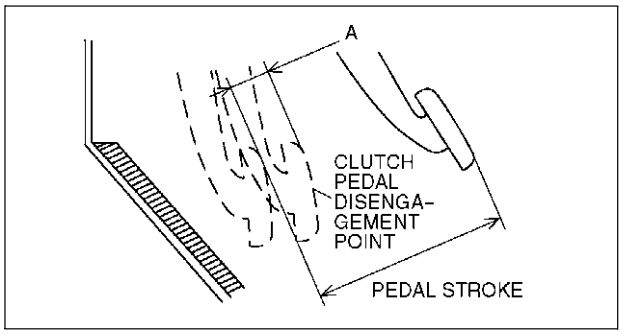

A6E4914W003

CLUTCH PEDAL REMOVAL/INSTALLATION

A6E491441030W02

1. Remove the battery and battery tray. (European (L.H.D.) and GCC specs.)
2. Remove in the order indicated in the table.
3. Install in the reverse order of removal.
4. After installation, adjust the clutch pedal. (See H–5 CLUTCH PEDAL ADJUSTMENT.)

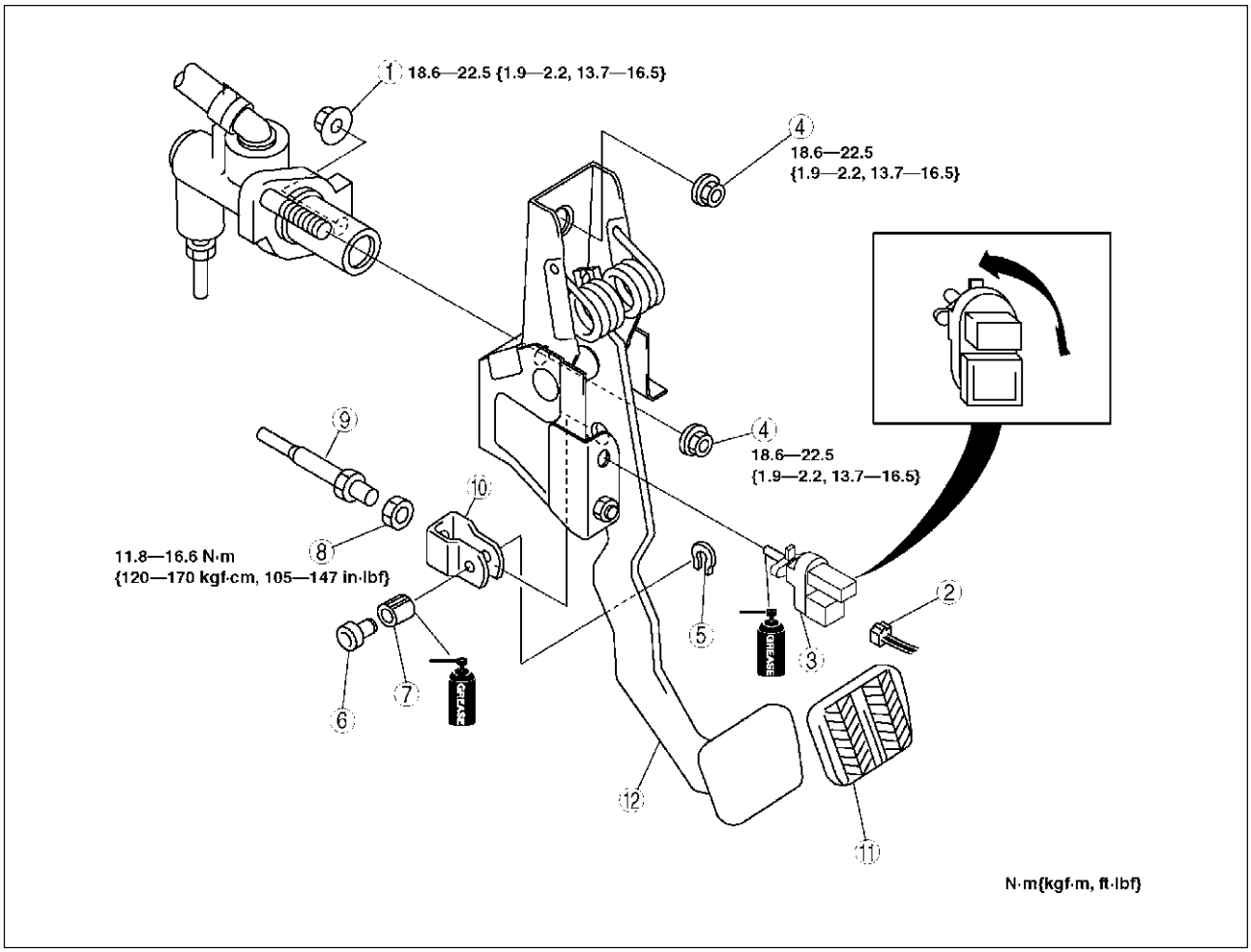

A6E4914W004

1	Nut
2	Clutch switch connector
3	Clutch switch
4	Nut
5	E-clip

6	Pin
7	Bushing
8	Nut
9	Push rod
10	Clevis

11	Pedal pad
12	Clutch pedal (See H–7 Clutch Pedal Installation Note)

Clutch Pedal Installation Note

1. After installation, adjust the pedal height and free play. (See H–5 CLUTCH PEDAL ADJUSTMENT.)

CLUTCH MASTER CYLINDER

CLUTCH MASTER CYLINDER REMOVAL/INSTALLATION

A6E491641990W01

1. Remove the battery and battry tray. (European (L.H.D.), GCC. specs.)
2. Remove in the order indicated in the table.
3. Plug the clutch pipe after removing it to avoid leakage.
4. Install in the reverse order of removal.

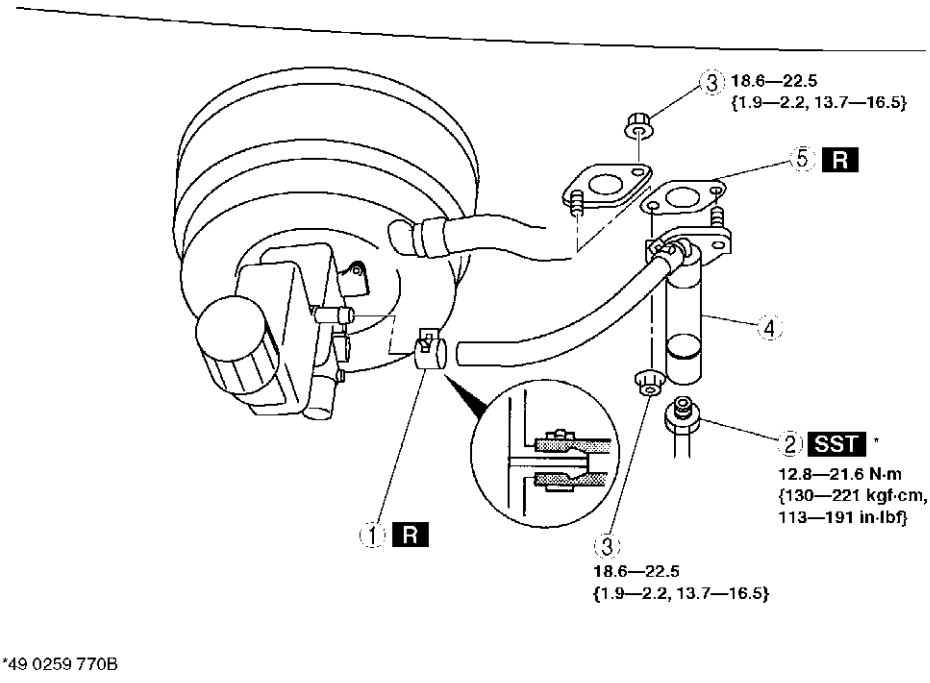

A6E4916W001

1	Clip
2	Clutch pipe
3	Nut

4	Clutch master cylinder
5	Gasket

CLUTCH MASTER CYLINDER DISASSEMBLY/ASSEMBLY

A6E491641990W02

1. Disassemble in the order indicated in the table.
2. Assemble in the reverse order of disassembly.

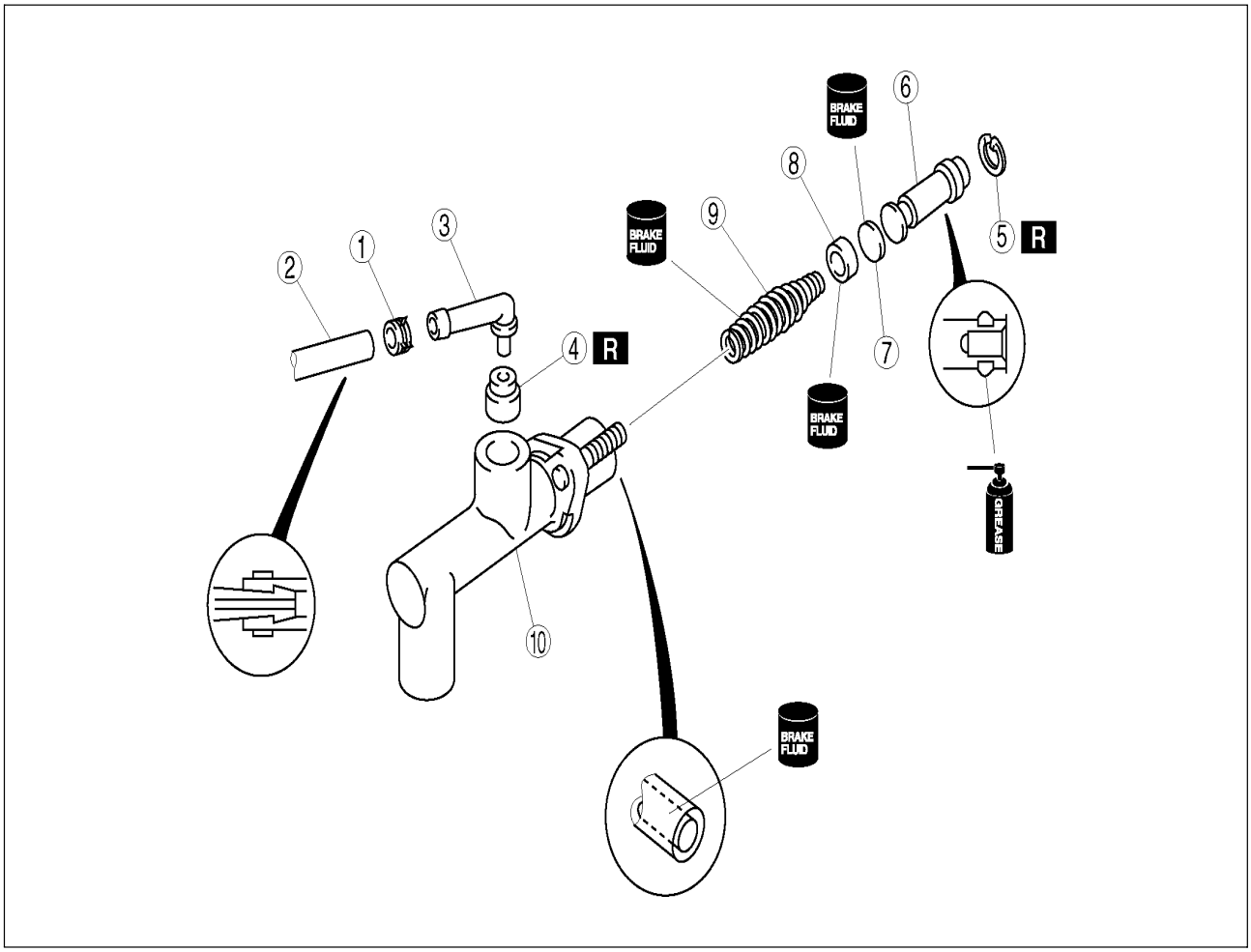

A6E4916W002

1	Clip
2	Hose
3	Joint
4	Bushing
5	Snap ring (See H–8 Snap Ring Disassembly/Assembly Note)

6	Piston and secondary cap component
7	Spacer
8	Primary cap
9	Return spring
10	Clutch master cylinder body

Snap Ring Disassembly/Assembly Note

1. Hold the piston down using a cloth-wrapped pin punch.
   - If disassembling, remove the snap ring; if assembling, install it.

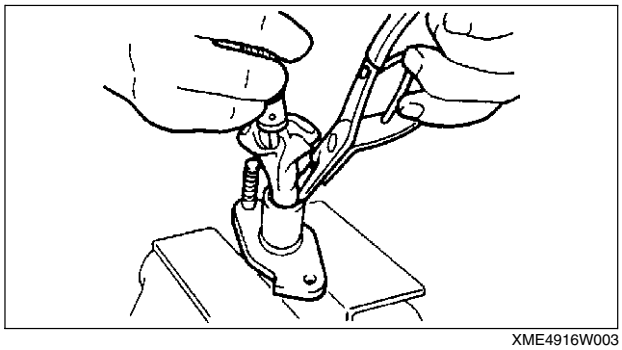

XME4916W003

CLUTCH RELEASE CYLINDER

CLUTCH RELEASE CYLINDER REMOVAL/INSTALLATION

A6E491841920W01

1. Remove the under cover.
2. Remove in the order indicated in the table.
3. Install in the reverse order of removal.

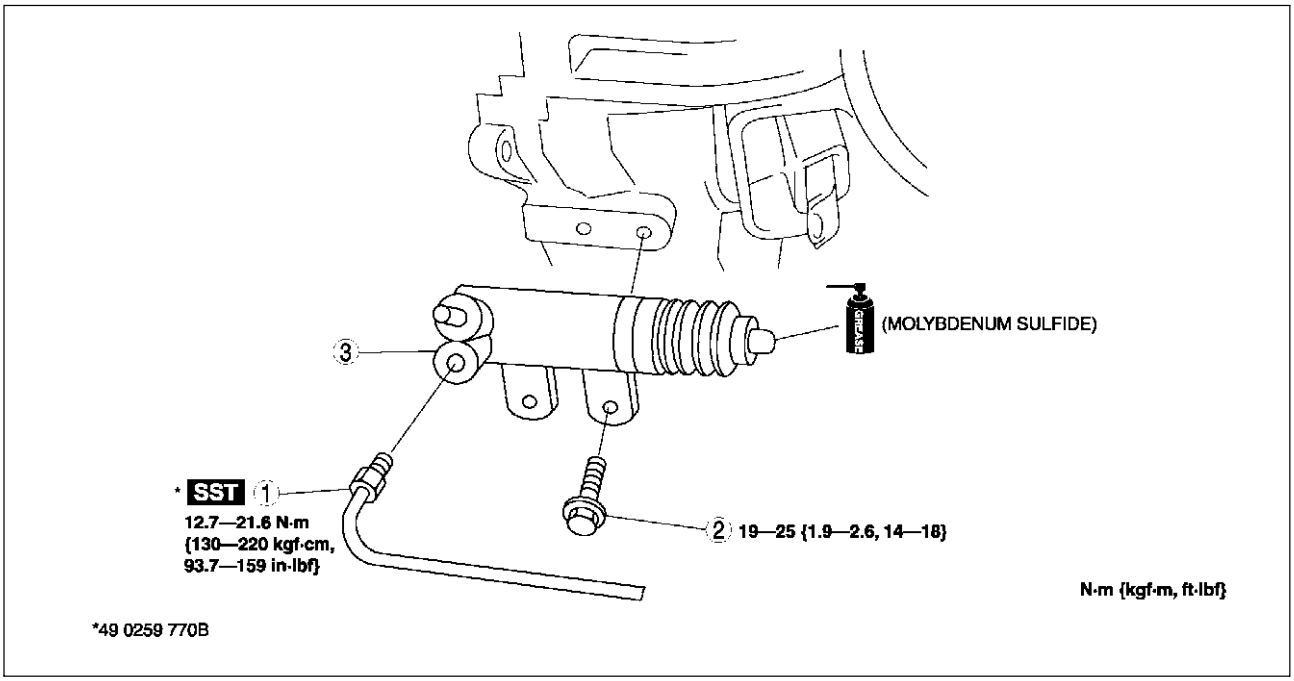

A6E4918W001

1	Clutch pipe
2	Bolt

3	Clutch release cylinder

CLUTCH RELEASE CYLINDER DISASSEMBLY/ASSEMBLY

A6E491841920W02

1. Disassemble in the order indicated in the table.
2. Assemble in the reverse order of disassembly.

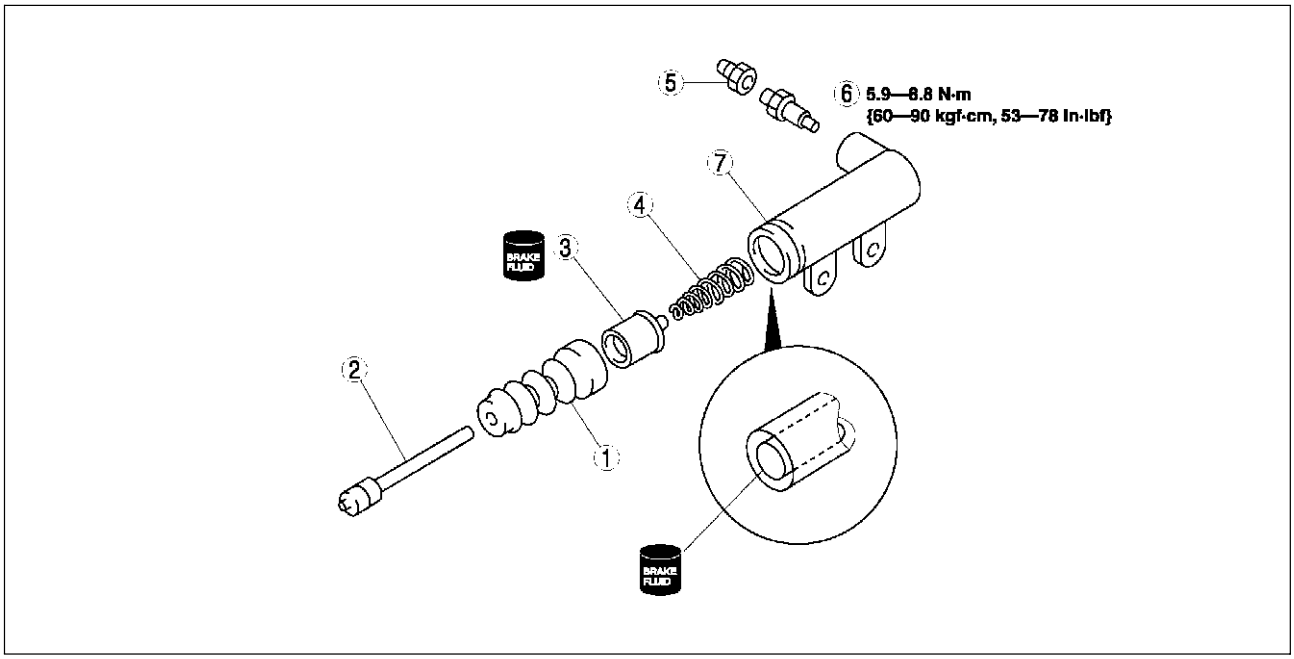

A6E4918W002

1	Boot
2	Push rod
3	Piston and cap
4	Return spring

5	Bleeder cap
6	Bleeder screw
7	Release cylinder body

CLUTCH UNIT

CLUTCH UNIT REMOVAL/INSTALLATION

A6E492016000W01

1. Remove in the order indicated in the table.
2. Install in the reverse order oremoval.

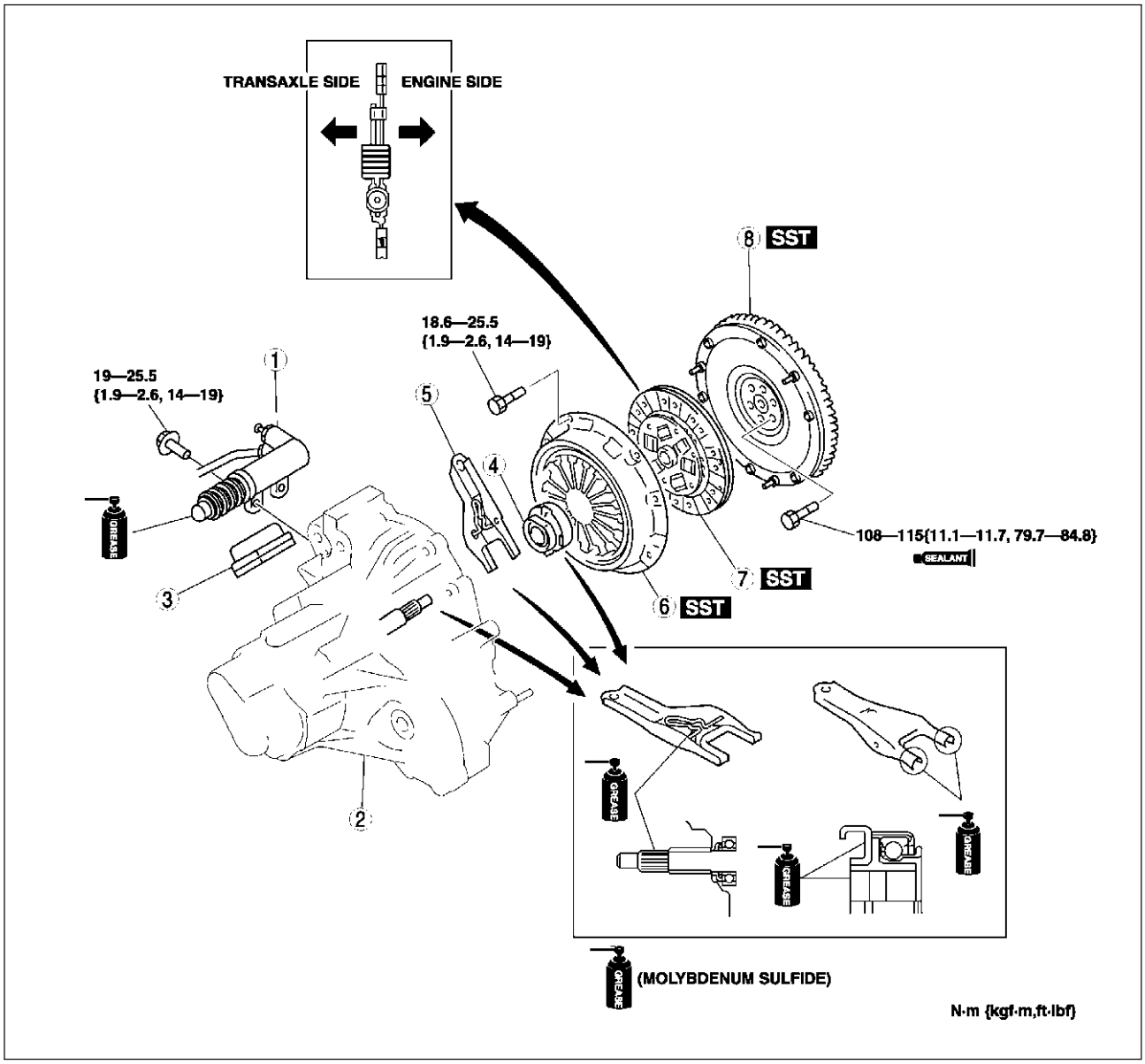

A6E4920W001

1	Clutch release cylinder
2	Manual transaxle (See J–5 MANUAL TRANSAXLE REMOVAL/ INSTALLATION)
3	Boot
4	Clutch release collar
5	Clutch release fork

6	Clutch cover (See H–12 Clutch Cover and Disc Removal Note) (See H–13 Clutch Cover Installation Note)
7	Clutch disc (See H–12 Clutch Cover and Disc Removal Note) (See H–13 Clutch Disc Installation Note)
8	Flywheel (See H–12 Flywheel Removal Note) (See H–12 Flywheel Installation Note)

Clutch Cover and Disc Removal Note

1. Install the SSTs.
2. Loosen each bolt one turn at a time in a crisscross pattern until spring tension is released.
3. Remove the clutch cover and disc.

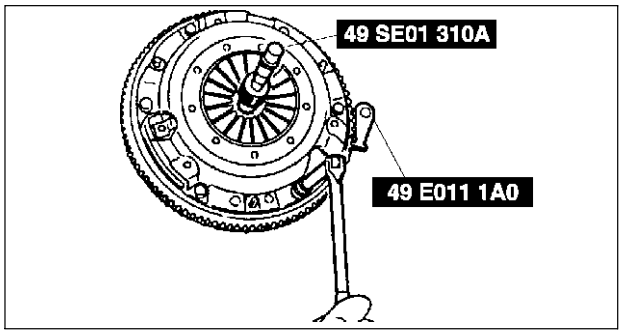

A6E4920W002

Flywheel Removal Note

1. Hold the flywheel using the SST.
2. Remove the bolts evenly and gradually in a crisscross pattern.
3. Remove the flywheel.

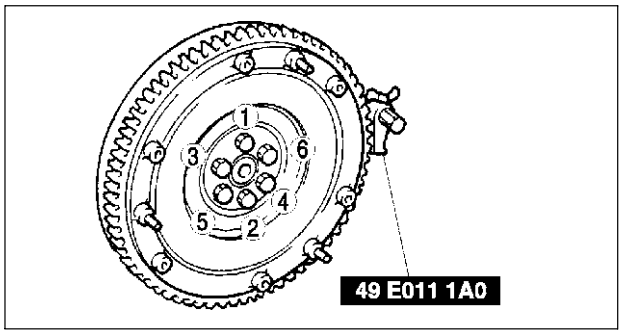

A6E4920W003

Flywheel Installation Note

1. Install the flywheel to the crankshaft.
2. When reusing the bolts, clean threads and hole, then apply locking compound to the threads.

Note

- No locking compound is needed when using new bolts.

3. Hand-tighten the flywheel lock bolts.
4. Install the **SST** to the flywheel.
5. Gradually tighten the flywheel lock bolts in a crisscross pattern.

Tightning torque
108—115 N·m {11.1—11.7 kgf·m, 79.7—84.8 ft·lbf}

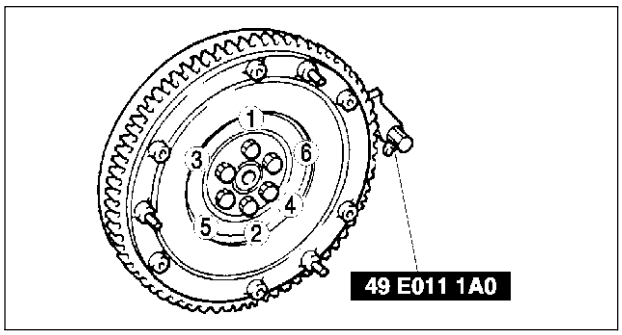

A6E4920W004

Clutch Disc Installation Note

1. Hold the clutch disc position using the **SST**.

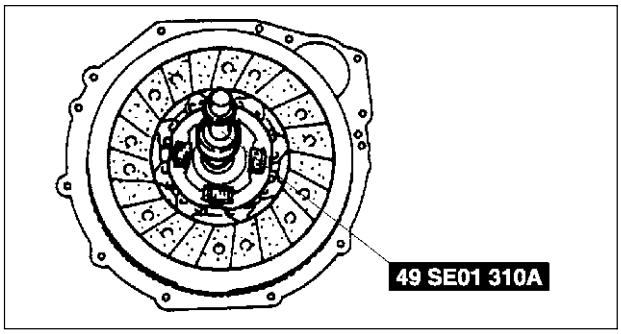

A6E4920W005

Clutch Cover Installation Note

1. Install the SSTs.
2. Tighten the bolts evenly and gradually in a crisscross pattern.

   Tightening torque
   18.6—25.5 N·m {1.9—2.6 kgf·m, 14—19 ft·lbf}

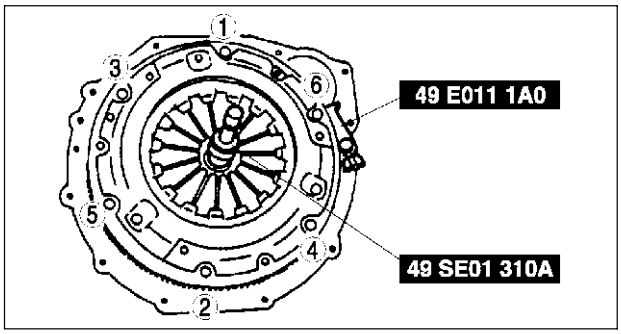

A6E4920W006

CLUTCH COVER INSPECTION

A6E492016410W01

1. Measure the wear of the diaphragm spring fingers.
   - If not as specified, replace the clutch cover.

   Depth
   0.6 mm {0.024 in} max.

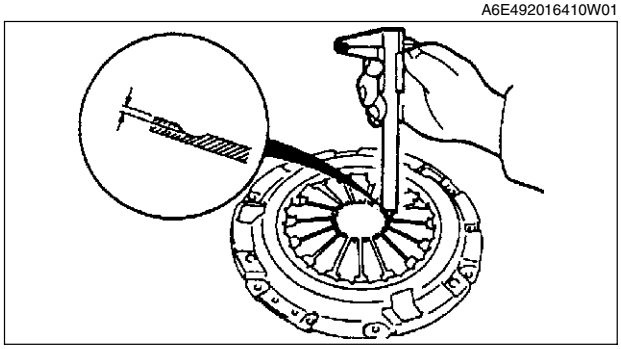

XME4920W010

2. Measure the flatness of the pressure plate with a straight edge and a feeler gauge.
   - If not as specified, replace the clutch cover.

   Maximum clearance
   0.5 mm {0.020 in}

3. When checking the diaphragm spring fingers, mount a dial indicator on the cylinder block.

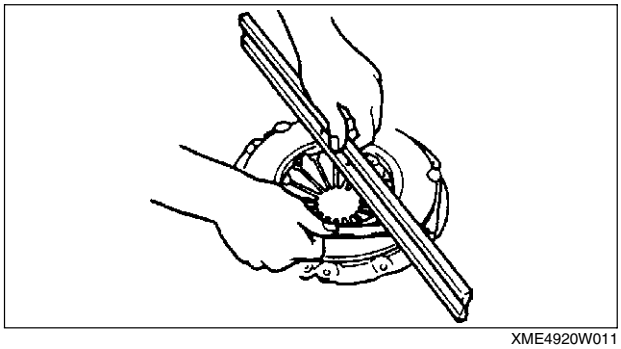

XME4920W011

4. Rotate the flywheel and check for misaligned diaphragm spring fingers.
   - If not as specified, replace the clutch cover.

   Misalignment
   0.6 mm {0.024 in} max.

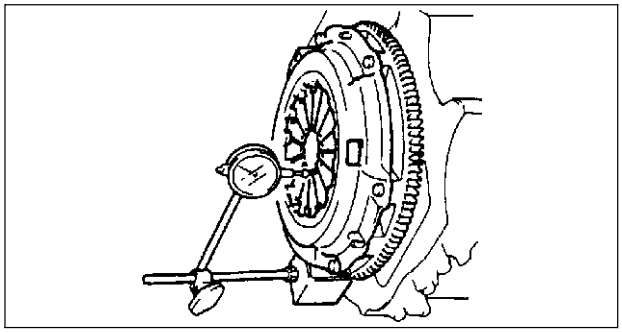

XME4920W012

CLUTCH DISC INSPECTION

A6E492016460W01

1. Using vernier calipers, measure the thickness of the lining at a rivet head on both sides.
   - Replace the clutch disc if its thickness is less than the minimum.

   Thickness
   0.3 mm {0.012 in} min.

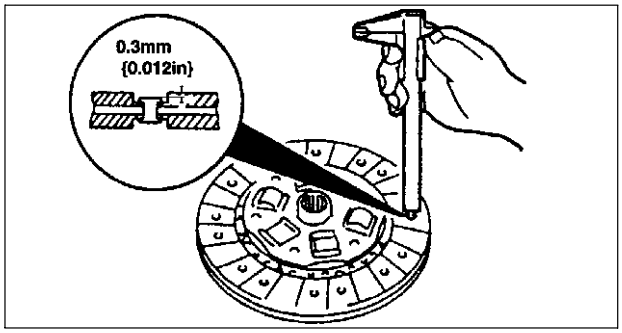

A6E4920W007

2. Measure the clutch disc runout using a dial indicator.
   - If the runout is excessive, replace the clutch disc.

   Runout
   0.7 mm {0.028 in} max.

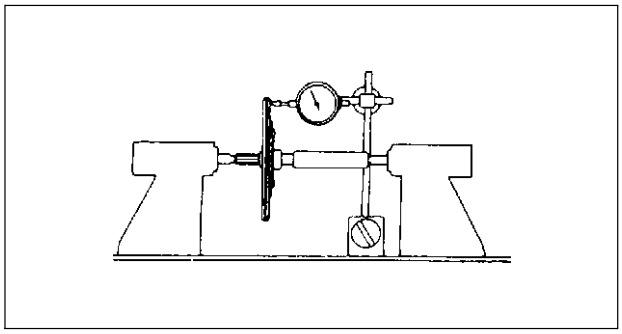

XME4920W014

CLUTCH RELEASE COLLAR INSPECTION

A6E492016510W01

Caution
- **Cleaning the clutch release collar with cleaning fluids or a steam cleaner can wash the grease out of the sealed bearing.**

1. Turn the collar while applying force in the axial direction.
   - If the collar sticks or has excessive resistance, replace the clutch release collar.

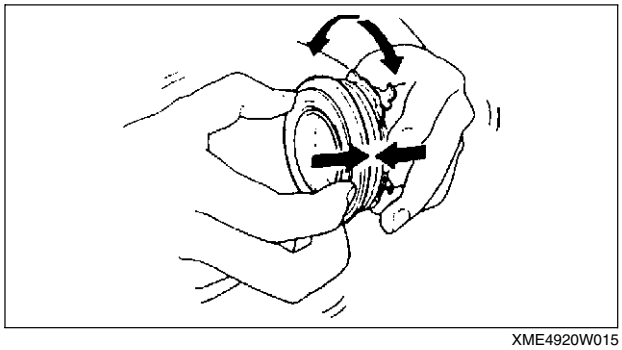

XME4920W015

FLYWHEEL

FLYWHEEL INSPECTION

1. Install a dial gauge on the cylinder block.
2. Measure the flywheel runout using a dial indicator.
   - If the runout is excessive, replace the flywheel.

Runout
0.1 mm {0.004 in} max.

A6E492211500W01

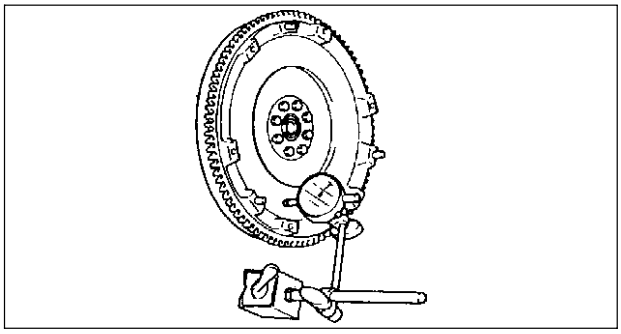

XME4922W001

MANUAL TRANSAXLE

LOCATION INDEX J-2
MANUAL TRANSAXLE LOCATION INDEX J-2
MANUAL TRANSAXLE J-3
TRANSAXLE OIL INSPECTION J-3
TRANSAXLE OIL REPLACEMENT J-3
OIL SEAL (DIFFERENTIAL) REPLACEMENT J-4
VEHICLE SPEEDOMETER SENSOR REMOVAL/INSTALLATION J-4
VEHICLE SPEEDOMETER SENSOR INSPECTION J-5
MANUAL TRANSAXLE REMOVAL/INSTALLATION J-5
SHIFT MECHANISM J-9
SHIFT MECHANISM REMOVAL/INSTALLATION J-9

LOCATION INDEX

MANUAL TRANSAXLE LOCATION INDEX

A6E510001036W01

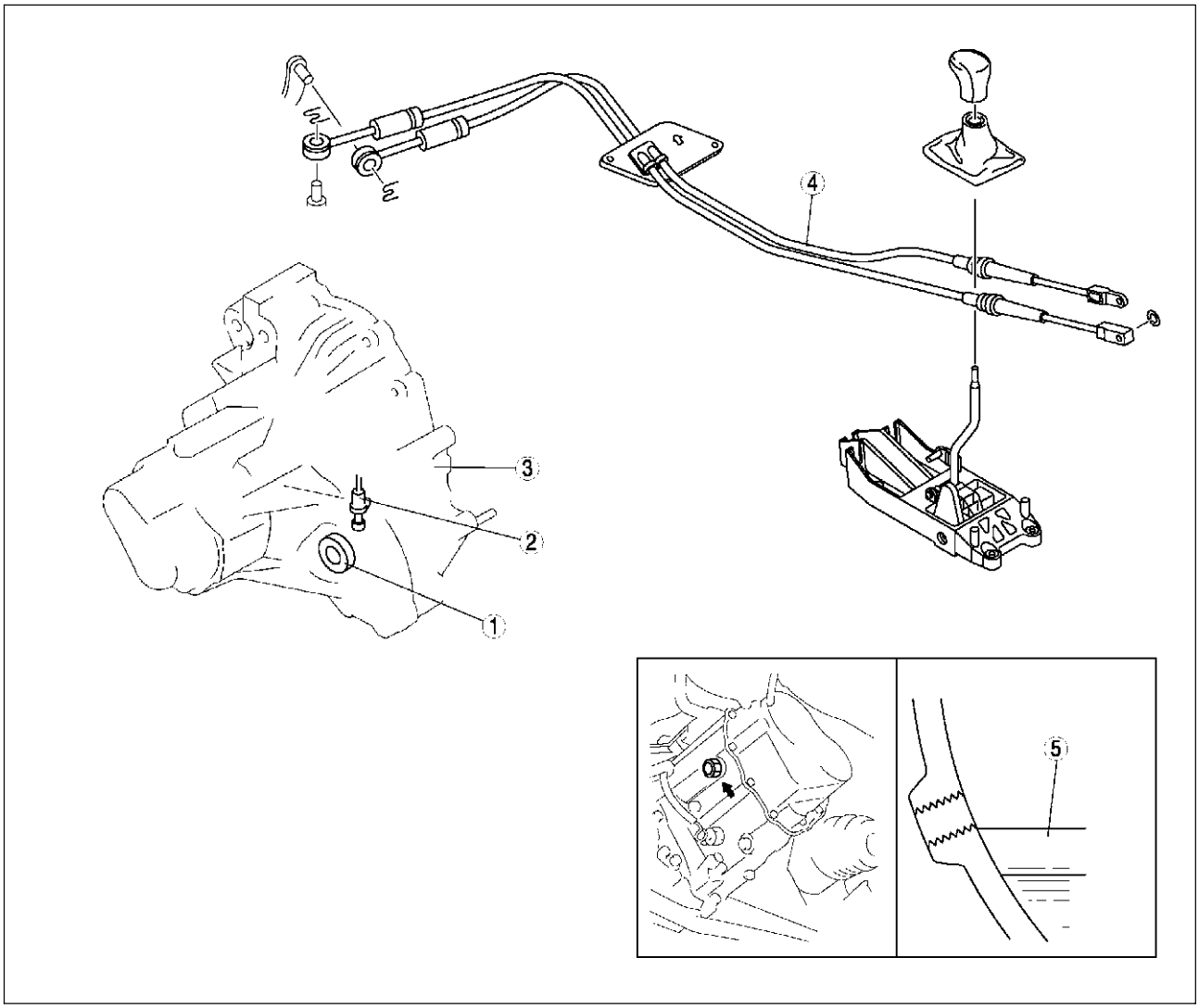

A6E5100W001

1	Oil seal (differential) (See J–4 OIL SEAL (DIFFERENTIAL) REPLACEMENT)
2	Vehicle speedometer sensor (See J–4 VEHICLE SPEEDOMETER SENSOR REMOVAL/INSTALLATION) (See J–5 VEHICLE SPEEDOMETER SENSOR INSPECTION)

3	Manual transaxle (See J–5 MANUAL TRANSAXLE REMOVAL/ INSTALLATION)
4	Shift mechanism (See J–9 SHIFT MECHANISM REMOVAL/ INSTALLATION)
5	Transaxle oil (See J–3 TRANSAXLE OIL INSPECTION) (See J–3 TRANSAXLE OIL REPLACEMENT)

MANUAL TRANSAXLE

TRANSAXLE OIL INSPECTION

A6E511227001W01

1. Park the vehicle on level ground.
2. Remove the oil level plug and washer.
3. Verify that the oil is near the brim of the plug port.
   - If the oil level is lower than the low level, add the specified amount and type of oil through the oil level plug hole.

   Specified oil grade
   API Service GL-4 or GL-5

   Specified oil viscosity
   All-season: SAE 75W-90
   Above 10 °C {50 °F}: SAE 80W-90

4. Install a new washer and the oil level plug.

   Tightening torque
   40—58 N·m {4.0—6.0 kgf·m, 29—43 ft·lbf}

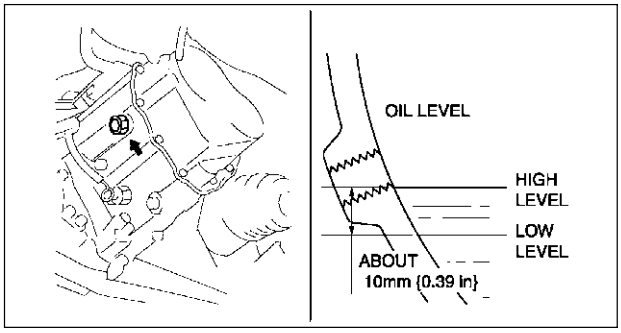

A6E5112W007

TRANSAXLE OIL REPLACEMENT

A6E511227001W02

1. Remove the drain plug with the washer.
2. Drain the oil into a suitable container.
3. Install a new washer and the drain plug.

   Tightening torque
   40—58 N·m {4.0—6.0 kgf·m, 29—43 ft·lbf}

4. Remove the oil level plug with washer and add the specified amount and type of oil through the oil level plug hole until the level reaches the bottom of the oil level plug hole.

   Specified oil viscosity
   All-season: SAE 75W-90
   Above 10 °C {50 °F}: SAE 80W-90
   Capacity (approximate quantity)
   2.87 L {3.03 US qt, 2.53 Imp qt}

5. Install a new washer and the oil level plug.

   Tightening torque
   40—58 N·m {4.0—6.0 kgf·m, 29—43 ft·lbf}

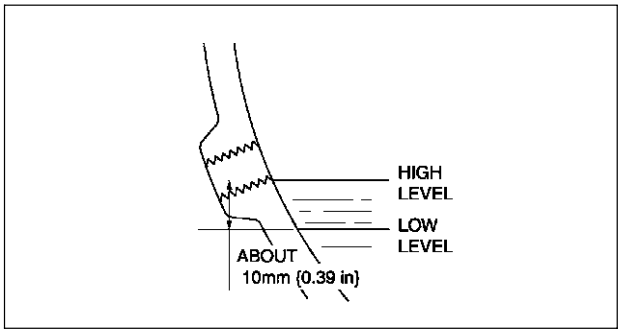

A6E5112W008

J

OIL SEAL (DIFFERENTIAL) REPLACEMENT

A6E511219240W01

1. On level ground, jack up the vehicle and support it evenly on safety stands.
2. Drain the oil from the transaxle.
3. Remove the front wheels and splash shields.
4. Separate the drive shaft and joint shaft from the transaxle. (See M–17 DRIVE SHAFT REMOVAL/INSTALLATION.) (See M–12 JOINT SHAFT REMOVAL/INSTALLATION.)
5. Remove the oil seals using a screwdriver.

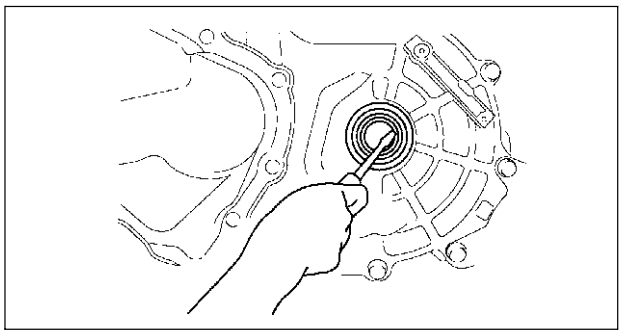

A6E5112W009

6. Using the **SST** and a hammer, tap each new oil seal in evenly until the **SST** contacts the transaxle case.
7. Coat the lip of each oil seal with transaxle oil.
8. Insert the drive shaft and joint shaft to the transaxle. (See M–17 DRIVE SHAFT REMOVAL/INSTALLATION.) (See M–12 JOINT SHAFT REMOVAL/INSTALLATION.)
9. Install the wheels and splash shields.
10. Add the specified amount and type of oil. (See J–3 TRANSAXLE OIL REPLACEMENT.)

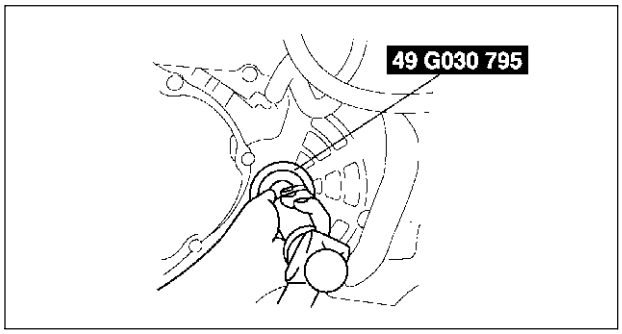

A6E5112W001

VEHICLE SPEEDOMETER SENSOR REMOVAL/INSTALLATION

A6E511217400W01

Without ABS

1. Disconnect the negative battery cable.
2. Remove the battery and battery tray.
3. Remove the air cleaner compornent. (See F–10 INTAKE-AIR SYSTEM REMOVAL/INSTALLATION.)
4. Disconnect the vehicle speedometer sensor connector.
5. Remove the vehicle speedometer sensor.
6. Apply transmission oil to a new O-ring and install it on a vehicle speedometer sensor.
7. Install the vehicle speedometer sensor.

Tightening torque
7.8—11.3 N·m
{80—115 kgf·cm, 57.6—83.3 in·lbf}

8. Connect the vehicle speedometer sensor connector.
9. Install the air cleaner compornent. (See F–10 INTAKE-AIR SYSTEM REMOVAL/INSTALLATION.)
10. Install the battery and battery tray.
11. Connect the negative battery cable.

VEHICLE SPEEDOMETER SENSOR INSPECTION

A6E511217400W02

Without ABS

1. Remove the vehicle speedometer sensor.
2. Measure voltage (AC range) between terminals of the vehicle speedometer sensor while the gear is turning.

Meter needle	Action
Moves slightly under **5 V** (AC range)	Repair wiring harness between instrument cluster and vehicle speedometer sensor.
Does not move	Replace vehicle speedometer sensor.

3. Install the vehicle speedometer sensor.

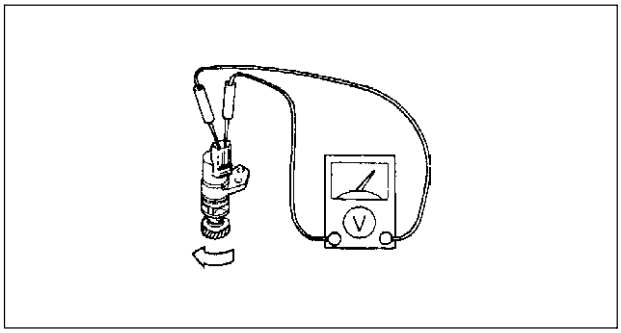

W6U515WA4

J

MANUAL TRANSAXLE REMOVAL/INSTALLATION

A6E511201029W01

1. Remove the battery, battery tray and battery bracket.
2. Remove the air cleaner compornent. (See F–10 INTAKE-AIR SYSTEM REMOVAL/INSTALLATION.)
3. Remove the wheels, tires and splash shields.
4. Remove the under cover.
5. Remove the steering gear and power steering pipe. (See N–10 STEERING GEAR AND LINKAGE REMOVAL/INSTALLATION.)
6. Remove the front auto leveling sensor. (See T–32 FRONT AUTO LEVELING SENSOR REMOVAL/INSTALLATION.)
7. Drain the transaxle oil into a suitable container.
8. Remove in the order indicated in the table.
9. Install in the reverse order of removal.
10. Adjust the headlight zeroset. (See T–31 HEADLIGHT ZEROSET.)
11. Add the specified amount of specified transaxle oil.
12. Install the air cleaner compornent. (See F–10 INTAKE-AIR SYSTEM REMOVAL/INSTALLATION.)
13. Warm up the engine and transaxle, inspect for oil leakage, and inspect the transaxle operation.

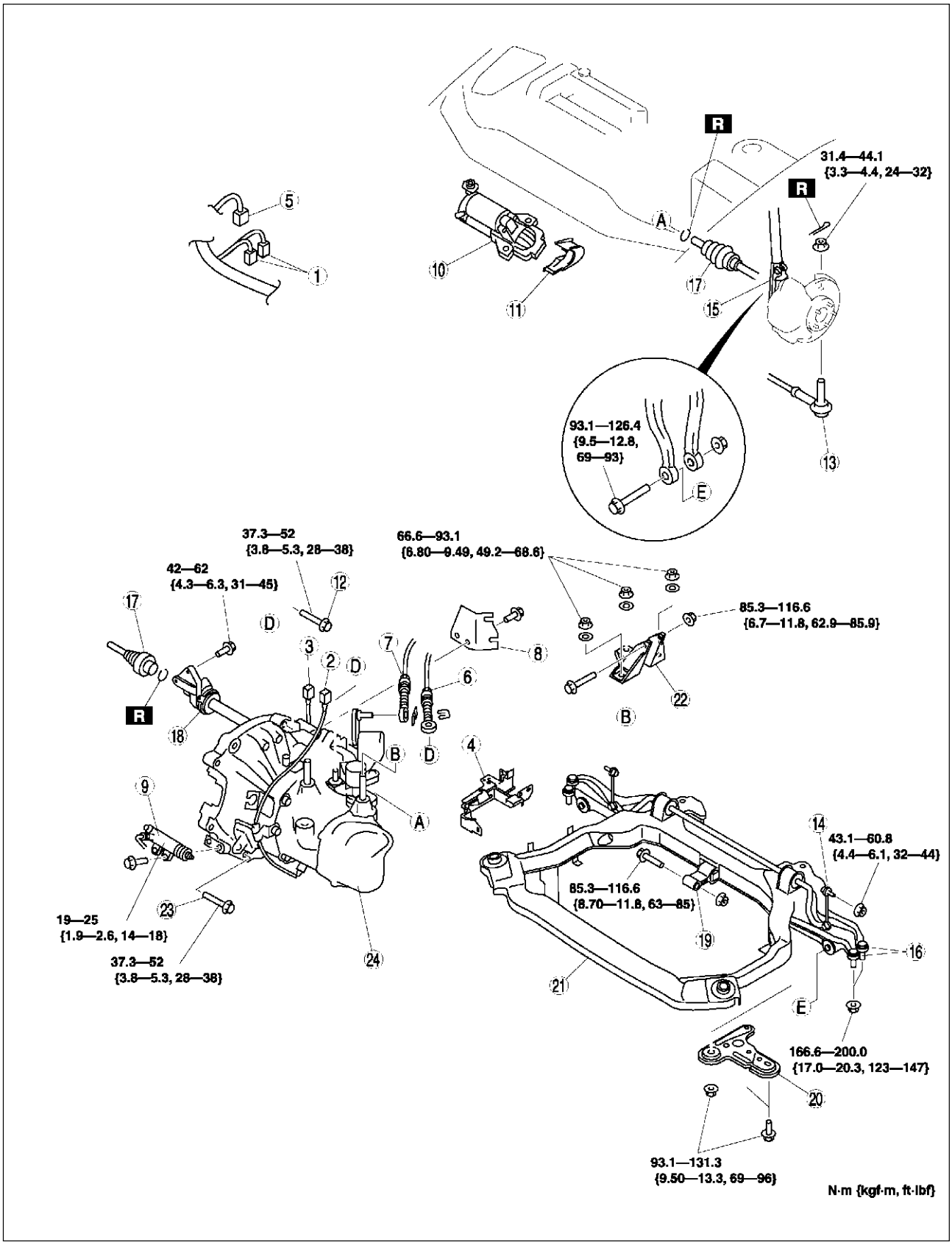

A6E5112W012

1	O_2 sensor connector
2	Back-up light switch connector
3	Neutral switch connector

4	Harness bracket
5	Vehicle speedometer sensor connector (GCC specs.)

6	Selector cable
7	Shift cable
8	Selector cable bracket
9	Clutch release cylinder
10	Starter
11	Endplate cover
12	Transaxle mounting bolt (upper side)
13	Tie-rod end ball joint (See N–11 Tie-rod End Ball Joint Removal Note)
14	Stabilizer control link
15	Damper fork
16	Lower arm (front, rear) ball joint (See R–19 Front Lower Arm (Rear) Ball Joint Removal Note) (See R–16 Front Lower Arm (Front) Ball Joint Removal Note)
17	Drive shaft (See M–17 DRIVE SHAFT REMOVAL/ INSTALLATION.)
18	Joint shaft (See M–12 JOINT SHAFT REMOVAL/ INSTALLATION.)
19	No.1 engine mount (See J–7 No.1 Engine Mount Bracket Removal Note) (See J–8 No.1 Engine Mount and No.4 Engine Mount Bracket Installation Note)
20	Crossmember bracket
21	Crossmember component (See R–23 FRONT CROSSMEMBER REMOVAL/ INSTALLATION)
22	No.4 engine mount (See J–8 No.1 Engine Mount and No.4 Engine Mount Bracket Installation Note)
23	Transaxle mounting bolt (lower side)
24	Manual transaxle (See J–7 Manual Transaxle Removal Note) (See J–8 Manual Transaxle Installation Note)

J

No.1 Engine Mount Bracket Removal Note

1. Support the engine using the SST before removing the No.1 engine mount.
2. Remove the No.1 engine mount.

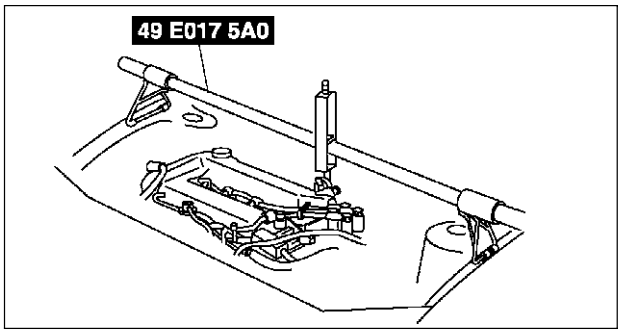

A6E5614W049

Manual Transaxle Removal Note

1. Loosen the **SST** (49 E017 5A0)and lean the engine toward the transaxle.
2. Support the transaxle on a jack.
3. Remove the transaxle mounting bolts.
4. Remove the transaxle.

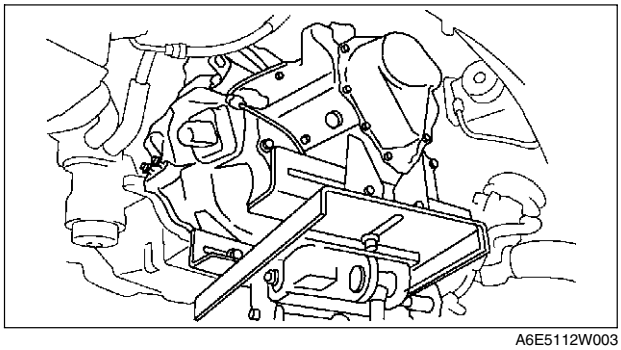

A6E5112W003

Manual Transaxle Installation Note

1. Set the transaxle on a jack and lift into place.
2. Install the transaxle mounting bolts.
3. Tighten the **SST** (49 E017 5A0)so that the engine is located at the specified position.

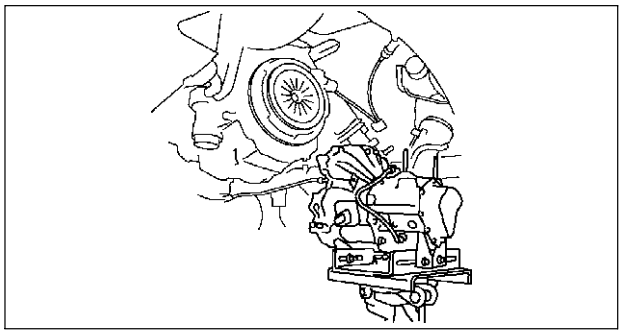

A6E5112W004

No.1 Engine Mount and No.4 Engine Mount Bracket Installation Note

1. Verify that the engine mount rubbers are installed as shown.
2. By aligning the holes with the stud bolts, install the No.4 engine mount bracket to the transaxle.
3. By aligning the holes with the stud bolts, install the No.1 engine mount to the transaxle.
4. Align the hole of the No.4 engine mount bracket with the No.4 engine mount rubber on vehicle, and temporarily tighten the bolt D.
5. Tighten the nut B,C in order of B→C, then bolt A.
6. Tighten the bolt D.

Tightening torque
A, B, C: 66.6—93.1 N·m {6.8—9.4 kgf·m, 50—68 ft·lbf}
D: 85.3—116.6 N·m {8.7—11.8 kgf·m, 63—85 ft·lbf}

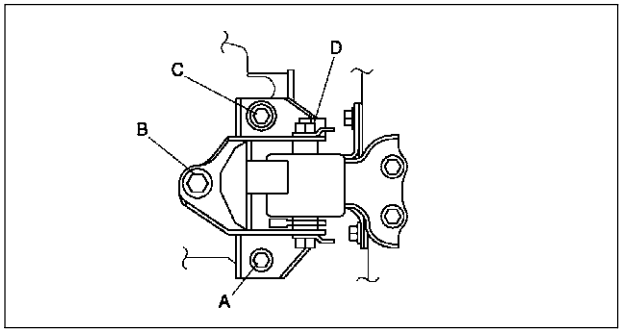

A6E5112W005

8. Tighten the bolt D to the No.1 engine mount.

Tightening torque
E: 85.3—116.6 N·m {8.7—11.8 kgf·m, 63—85 ft·lbf}

9. Remove the **SST** (49 E017 5A0).

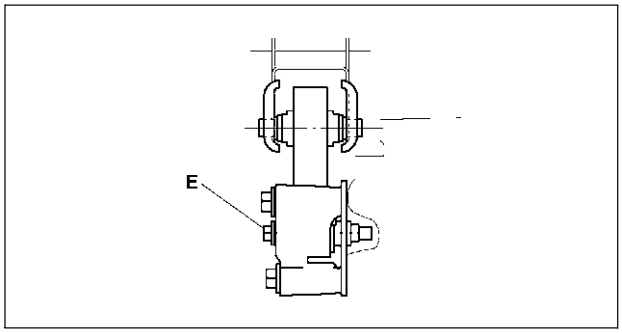

A6E5112W006

SHIFT MECHANISM

SHIFT MECHANISM REMOVAL/INSTALLATION

A6E511446010W01

1. Remove the battery, battery tray and battery bracket.
2. Remove the air cleaner component. (See F–10 INTAKE-AIR SYSTEM REMOVAL/INSTALLATION.)
3. Remove the dashboard compleat.
   (See S–82 DASHBOARD REMOVAL/INSTALLATION.)
4. Remove the SAS control module.
   (See T–124 SAS UNIT REMOVAL/INSTALLATION.)
5. Remove the climate control unit. (See U–44 CLIMATE CONTROL UNIT REMOVAL.) (See U–45 CLIMATE CONTROL UNIT INSTALLATION.)
6. Remove the rear heat duct. (See U–23 REAR HEAT DUCT REMOVAL/INSTALLATION.)
7. Remove in the order indicated in the table.
8. Install in the reverse order of removal.
9. Install the air cleaner component.
10. After installation, verify that the shift lever can be shifted smoothly into each position.

J

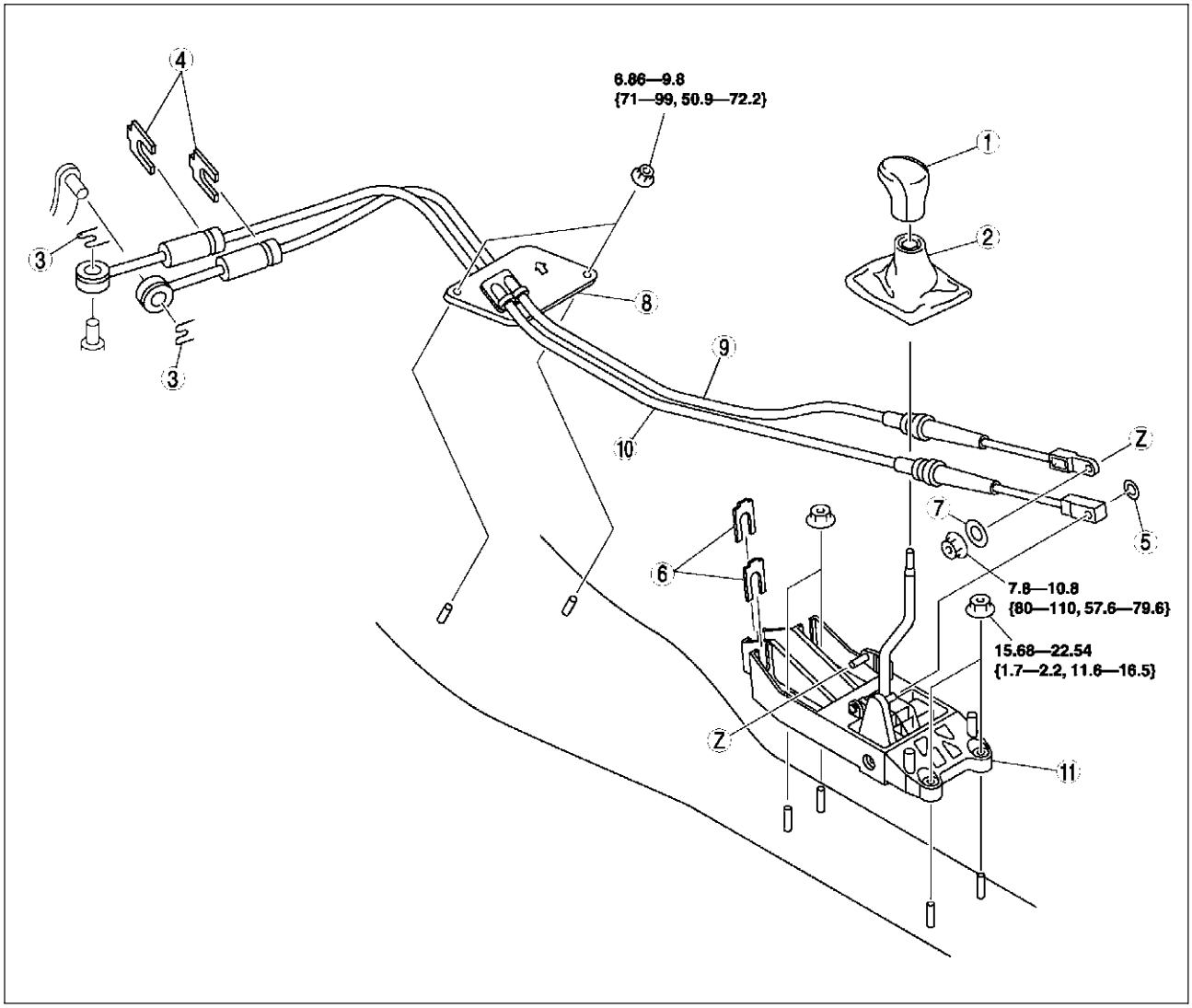

A6E5114W001

1	Shift lever knob
2	Boot panel
3	Clip
4	Clip
5	Clip
6	Clip

7	Plain Washer
8	Seal plate
9	Main shift cable
10	Main select cable (See J–10 Select Cable Installation Note)
11	Sift lever assembly

Select Cable Installation Note

1. Remove the center console.
2. Make sure that the shift lever (transaxle side) is in neutral.
3. Unlock the lock pice of the select cable (shift lever side) in the order shown in the figure.
4. Shift the sift lever to neutral.

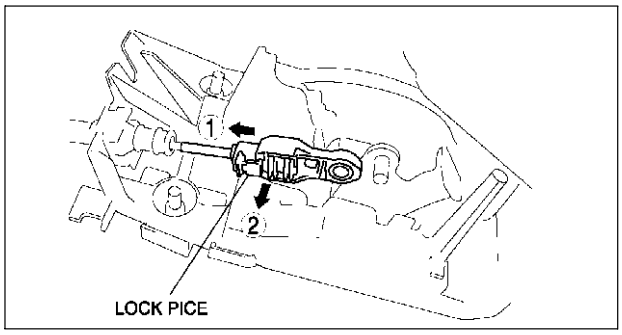

A6E5114W002

5. Lock the lock pice of the selector cable (shift cable side) in the order shown in the figure.
6. Install the center console.
7. Shift the shift lever from neutral to other position, and make sure that there are no other components in that area to interfere with the lever.

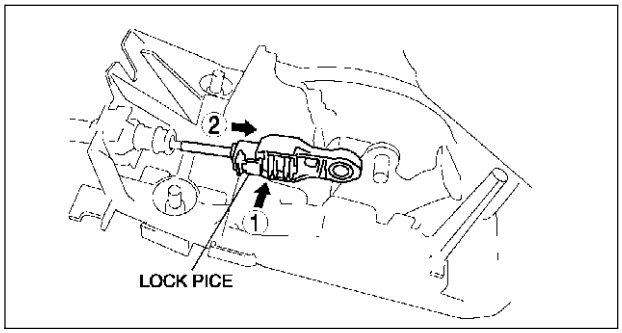

A6E5114W003

AUTOMATIC TRANSAXLE

LOCATION INDEX K-4
AUTOMATIC TRANSAXLE LOCATION INDEX K-4
AUTOMATIC TRANSAXLE K-6
MECHANICAL SYSTEM TEST K-6
ROAD TEST K-9
AUTOMATIC TRANSAXLE FLUID (ATF) INSPECTION K-12
AUTOMATIC TRANSAXLE FLUID (ATF) REPLACEMENT K-13
HOLD SWITCH INSPECTION K-13
HOLD SWITCH REMOVAL/INSTALLATION K-14
TRANSAXLE RANGE (TR) SWITCH INSPECTION K-14
TRANSAXLE RANGE (TR) SWITCH REMOVAL/INSTALLATION K-15
TRANSAXLE RANGE (TR) SWITCH ADJUSTMENT K-18
TRANSAXLE FLUID TEMPERATURE (TFT) SENSOR INSPECTION K-19
TRANSAXLE FLUID TEMPERATURE (TFT) SENSOR REMOVAL/INSTALLATION K-21
OIL PRESSURE SWITCH INSPECTION K-21
OIL PRESSURE SWITCH REMOVAL/INSTALLATION K-23
INPUT/TURBINE SPEED SENSOR INSPECTION K-23
INPUT/TURBINE SPEED SENSOR REMOVAL/INSTALLATION K-24
VEHICLE SPEEDOMETER SENSOR (VSS) INSPECTION K-24
VEHICLE SPEEDOMETER SENSOR (VSS) REMOVAL/INSTALLATION K-26
SOLENOID VALVE INSPECTION K-26
SOLENOID VALVE REMOVAL/INSTALLATION K-28
PCM INSPECTION K-29
PCM REMOVAL/INSTALLATION K-29
AUTOMATIC TRANSAXLE REMOVAL/INSTALLATION K-29
OIL SEAL REPLACEMENT K-33
CONTROL VALVE BODY REMOVAL K-34
CONTROL VALVE BODY INSTALLATION K-35
OIL COOLER FLUSHING K-36
OIL COOLER REMOVAL/INSTALLATION K-39
OIL COOLER DISASSEMBLY/ASSEMBLY K-41
DRIVE PLATE REMOVAL/INSTALLATION K-43
AUTOMATIC TRANSAXLE SHIFT MECHANISM K-45
SHIFT-LOCK INSPECTION K-45
KEY INTERLOCK INSPECTION K-45
INTERLOCK CABLE INSPECTION K-45
SELECTOR LEVER INSPECTION K-45
SELECTOR CABLE ADJUSTMENT K-46
SELECTOR LEVER REMOVAL/INSTALLATION K-46
SELECTOR LEVER DISASSEMBLY/ASSEMBLY K-51
ON-BOARD DIAGNOSTIC K-52
FOREWORD K-52
AUTOMATIC TRANSAXLE ON-BOARD DIAGNOSTIC FUNCTION K-52
AFTER REPAIR PROCEDURE K-52
DTC TABLE K-53
DTC P0500 ..... K-55
DTC P0706 ..... K-57
DTC P0707 ..... K-58
DTC P0708 ..... K-60
DTC P0711 ..... K-63
DTC P0712 ..... K-64
DTC P0713 ..... K-65
DTC P0715 ..... K-68
DTC P0731 ..... K-70
DTC P0732 ..... K-71
DTC P0733 ..... K-73
DTC P0734 ..... K-75
DTC P0741 ..... K-77
DTC P0742 ..... K-78
DTC P0745 ..... K-80
DTC P0751 ..... K-82
DTC P0752 ..... K-83
DTC P0753 ..... K-85
DTC P0756 ..... K-87
DTC P0757 ..... K-89
DTC P0758 ..... K-90
DTC P0761 ..... K-93
DTC P0762 ..... K-95
DTC P0763 ..... K-96
DTC P0766 ..... K-99
DTC P0767 ..... K-100
DTC P0768 ..... K-102
DTC P0771 ..... K-104
DTC P0772 ..... K-105
DTC P0773 ..... K-107
DTC P0841 ..... K-109
PID/DATA MONITOR INSPECTION K-110
TROUBLESHOOTING K-112
FOREWORD K-112
BASIC INSPECTION K-112
SYMPTOM TROUBLESHOOTING ITEM TABLE K-113
QUICK DIAGNOSIS CHART K-115
NO.1 VEHICLE DOES NOT MOVE IN D, S, L RANGES, OR IN R POSITION K-117
NO.2 VEHICLE MOVES IN N POSITION K-117
NO.3 VEHICLE MOVES IN P POSITION, OR PARKING GEAR DOES NOT DISENGAGE WHEN P IS DISENGAGED K-118
NO.4 EXCESSIVE CREEP K-118
NO.5 NO CREEP AT ALL K-118
NO.6 LOW MAXIMUM SPEED AND POOR ACCELERATION K-119

NO.7 NO SHIFTING K-120
NO.8 DOES NOT SHIFT TO FOURTH GEAR (4GR) K-120
NO.9 ABNORMAL SHIFTING K-122
NO.10 FREQUENT SHIFTING K-122
NO.11 SHIFT POINT IS HIGH OR LOW K-122
NO.12 TORQUE CONVERTER CLUTCH (TCC) NON-OPERATION K-123
NO.13 NO KICKDOWN K-123
NO.14 ENGINE FLARES UP OR SLIPS WHEN UPSHIFTING OR DOWNSHIFTING K-124
NO.15 ENGINE FLARES UP OR SLIPS WHEN ACCELERATING VEHICLE K-124
NO.16 JUDDER UPON TORQUE CONVERTER CLUTCH (TCC) OPERATION K-125
NO.17 EXCESSIVE SHIFT SHOCK FROM N TO D OR N TO R POSITION/RANGE K-126
NO.18 EXCESSIVE SHIFT SHOCK IS FELT WHEN UPSHIFTING AND DOWNSHIFTING K-127
NO.19 EXCESSIVE SHIFT SHOCK ON TORQUE CONVERTER CLUTCH (TCC) K-127
NO.20 NOISE OCCURS AT IDLE WHEN VEHICLE IS STOPPED IN ALL POSITIONS/RANGES K-128
NO.21 NOISE OCCURS AT IDLE WHEN VEHICLE IS STOPPED IN D, S, L RANGES, OR IN R POSITION K-128
NO.22 NO ENGINE BRAKING IN HOLD MODE K-129
NO.23 TRANSAXLE OVERHEATS K-129
NO.24 ENGINE STALLS WHEN SHIFTED TO D, S, L RANGES, OR IN R POSITION K-130
NO.25 ENGINE STALLS WHEN DRIVING AT SLOW SPEEDS OR STOPPING K-130
NO.26 STARTER DOES NOT WORK K-130
NO.27 HOLD INDICATOR LIGHT DOES NOT ILLUMINATE WHEN HOLD SWITCH IS TURNED TO ON K-130
NO.28 HOLD INDICATOR LIGHT ILLUMINATES WHEN HOLD SWITCH IS NOT TURNED TO ON K-131

LOCATION INDEX

AUTOMATIC TRANSAXLE LOCATION INDEX

A6E560001074W01

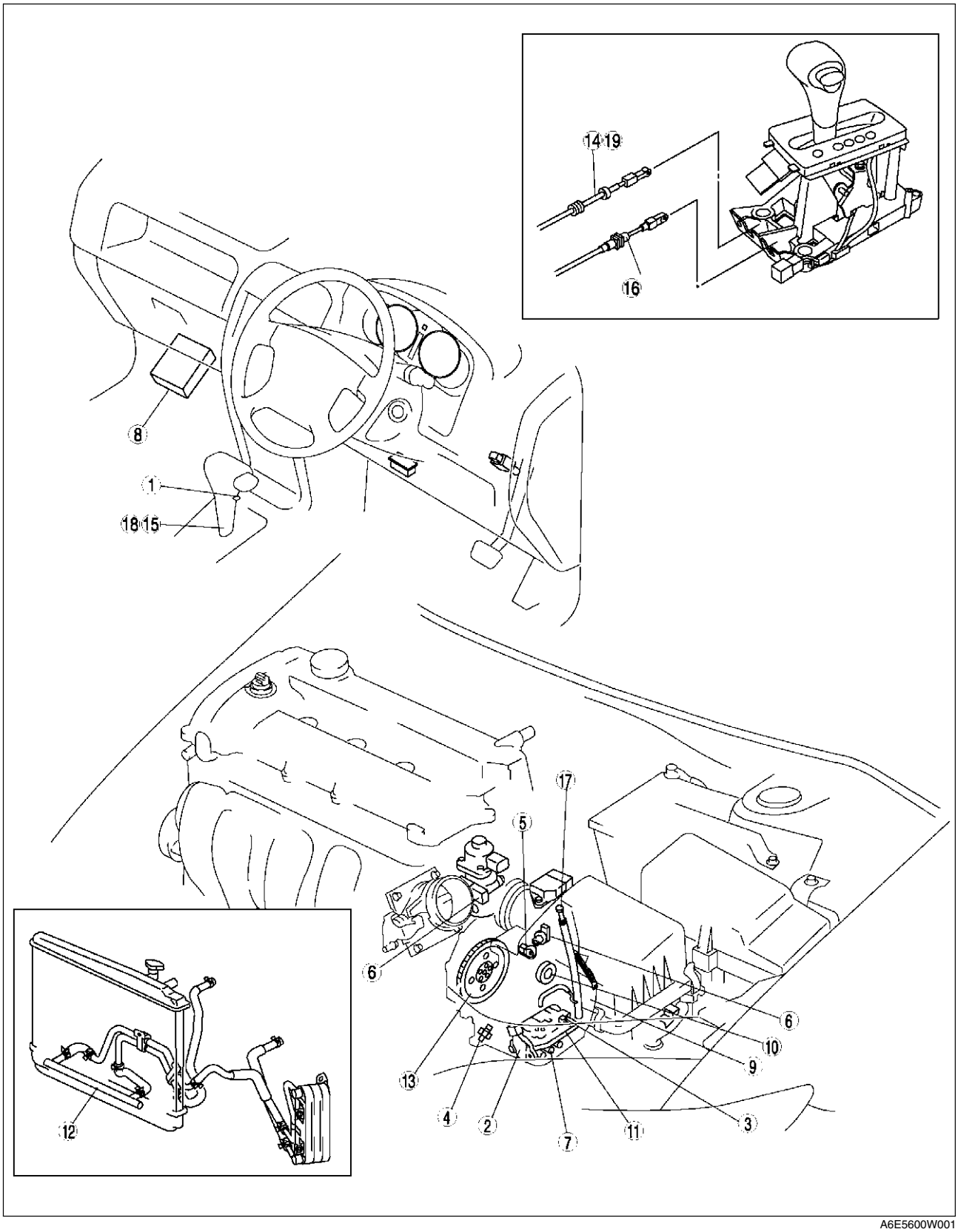

A6E5600W001

1	HOLD switch (See K–13 HOLD SWITCH INSPECTION) (See K–14 HOLD SWITCH REMOVAL/INSTALLATION)
2	Transaxle range (TR) switch (See K–14 TRANSAXLE RANGE (TR) SWITCH INSPECTION) (See K–15 TRANSAXLE RANGE (TR) SWITCH REMOVAL/INSTALLATION) (See K–18 TRANSAXLE RANGE (TR) SWITCH ADJUSTMENT)
3	Transaxle fluid temperature (TFT) sensor (See K–19 TRANSAXLE FLUID TEMPERATURE (TFT) SENSOR INSPECTION) (See K–21 TRANSAXLE FLUID TEMPERATURE (TFT) SENSOR REMOVAL/INSTALLATION)
4	Oil pressure switch (See K–21 OIL PRESSURE SWITCH INSPECTION) (See K–23 OIL PRESSURE SWITCH REMOVAL/INSTALLATION)
5	Input/turbine speed sensor (See K–23 INPUT/TURBINE SPEED SENSOR INSPECTION) (See K–24 INPUT/TURBINE SPEED SENSOR REMOVAL/INSTALLATION)
6	Vehicle speedometer sensor (See K–24 VEHICLE SPEEDOMETER SENSOR (VSS) INSPECTION) (See K–26 VEHICLE SPEEDOMETER SENSOR (VSS) REMOVAL/INSTALLATION)
7	Solenoid valve (See K–26 SOLENOID VALVE INSPECTION) (See K–28 SOLENOID VALVE REMOVAL/INSTALLATION)
8	PCM (See K–29 PCM INSPECTION) (See K–29 PCM REMOVAL/INSTALLATION)
9	Automatic transaxle (See K–29 AUTOMATIC TRANSAXLE REMOVAL/INSTALLATION)
10	Oil seal (See K–33 OIL SEAL REPLACEMENT)
11	Control valve body (See K–34 CONTROL VALVE BODY REMOVAL) (See K–35 CONTROL VALVE BODY INSTALLATION)
12	Oil cooler (See K–36 OIL COOLER FLUSHING) (See K–39 OIL COOLER REMOVAL/INSTALLATION) (See K–41 OIL COOLER DISASSEMBLY/ASSEMBLY)
13	Drive plate (See K–43 DRIVE PLATE REMOVAL/INSTALLATION)
14	Interlock cable (See K–45 INTERLOCK CABLE INSPECTION)
15	Selector lever (See K–45 SELECTOR LEVER INSPECTION) (See K–46 SELECTOR LEVER REMOVAL/INSTALLATION) (See K–51 SELECTOR LEVER DISASSEMBLY/ASSEMBLY)
16	Select cable (See K–46 SELECTOR CABLE ADJUSTMENT)
17	Automatic transaxle fluid (ATF) (See K–12 AUTOMATIC TRANSAXLE FLUID (ATF) INSPECTION) (See K–13 AUTOMATIC TRANSAXLE FLUID (ATF) REPLACEMENT)
18	Shift-lock (See K–45 SHIFT-LOCK INSPECTION)
19	Key interlock (See K–45 KEY INTERLOCK INSPECTION)

AUTOMATIC TRANSAXLE

MECHANICAL SYSTEM TEST

A6E561401030W01

Mechanical System Test Preparation

1. Engage the parking brake and use wheel chocks at the front and rear of the wheels.
2. Inspect the engine coolant. (See E–3 ENGINE COOLANT LEVEL INSPECTION.)
3. Inspect the engine oil. (See D–4 ENGINE OIL INSPECTION.)
4. Inspect the ATF levels. (See K–12 AUTOMATIC TRANSAXLE FLUID (ATF) INSPECTION.)
5. Inspect the idle speed and ignition timing in P position. (See F–8 IDLE SPEED INSPECTION.)(See F–8 IGNITION TIMING INSPECTION.)
6. Bring up the engine and transaxle to normal operating temperature.

Line Pressure Test

1. Perform mechanical system test preparation. (See K–6 Mechanical System Test Preparation.)

Warning

- **Removing the square-head plug when the ATF is hot can be dangerous. Hot ATF can come out of the opening and badly burn you. Before removing the square-head plug, allow the ATF to cool.**

2. Connect the **SSTs** (49 H019 002 and, 49 0378 400C) to the line pressure inspection port, then replace the gauge of the **SST** (49 0378 400C) with the **SST** (49 B019 901B).
3. Start the engine, then warm up the automatic transaxle.
4. Shift the selector lever to D range.
5. Read the line pressure at idle engine speed for the D range.
6. Read the line pressure at idle engine speed for the D (HOLD), S, S (HOLD), L, L (HOLD) ranges and R positions in the same manner as in Steps 4-5.
7. Stop the engine, then replace the **SST** (49 B019 901B) with the gauge of the **SST** (49 0378 400C).
8. Start the engine.
9. Firmly depress the brake pedal with the left foot.
10. Shift the selector lever to D range position.

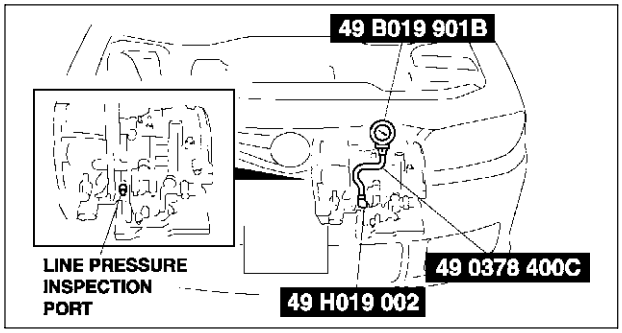

A6E5614W002

Caution

- **If the accelerator pedal is pressed for longer than 5 seconds while the brake pedal is pressed, the transaxle could be damaged. Therefore, perform Steps 11 and 12 within 5 seconds each.**

11. Gradually depress the accelerator pedal with the right foot.
12. When the engine speed no longer increases, quickly read the line pressure and release the accelerator pedal.
13. Shift the selector lever to N position and let the engine idle for 1 minute or more to cool the ATF.
14. Read the line pressure at the engine stall speed for the D, D (HOLD), S, S (HOLD), L, L(HOLD) ranges and R position in the same manner as in Steps 9-13.

Specified line pressure

Position/Range		Line pressure (kPa {kgf/cm^2, psi})
		LF
D, S, L*	idle	330—470 {3.4—4.8, 48—68}
	Stall	1,160—1,320 {11.8—12.5, 168—191}
R	idle	490—710 {5.0—7.2, 71—102}
	Stall	1,600—1,820 {16.3—18.6, 232—264}

* : Includes each HOLD mode

Warning

- **Removing the square-head plug when the ATF is hot can be dangerous. Hot ATF can come out of the opening and badly burn you. Before removing the square-head plug, allow the ATF to cool.**

15. Remove the **SSTs**.
16. Install a new square head plug in the inspection port.

Tightening torque
5.0—9.8 N·m {50—100 kgf·cm, 44—86 in·lbf}

Evaluation of line pressure test

Line pressure	Possible cause
Low pressure in all ranges	Worn oil pump Oil leaking from oil pump, control valve body, and/or transaxle case Pressure regulator valve sticking Pressure control solenoid malfunction Pressure modulator valve sticking Solenoid reducing valve sticking
Low pressure in D and S only	Oil leaking from hydraulic circuit of forward clutch
Low pressure in L and R only	Oil leaking from hydraulic circuit of low and reverse brake
Low pressure in R only	Oil leaking from hydraulic circuit of reverse clutch
High pressure in all ranges	Pressure control solenoid malfunction Pressure regulator valve sticking Pressure modulator valve sticking Pressure reducing valve sticking

Stall Test

1. Perform mechanical system test preparation. (See K–6 Mechanical System Test Preparation.)
2. Start the engine.
3. Firmly depress the brake pedal with the left foot.
4. Shift the selector lever to D range.

Caution
- **If the accelerator pedal is pressed for longer than 5 seconds while the brake pedal is pressed, the transaxle could be damaged. Therefore, perform Steps 5 and 6 within 5 seconds of each other.**

5. Gently depress the accelerator pedal with the right foot.
6. When the engine speed no longer increases, quickly read the speed and release the accelerator pedal. When the engine speed no longer increases, quickly read the speed and release the accelerator pedal.
7. Shift the selector lever to N position and let the engine idle for 1 minute or more to cool the ATF.
8. Perform a stall test of D (HOLD), S, S (HOLD), L, L (HOLD) and R range positions in the same manner as in Steps 3—7.
9. Turn the ignition switch off.

Engine stall speed

Position/ Range	Engine stall speed (rpm)
	LF
D, S, L*	2,000—2,600
R	

* : Includes each HOLD mode

Evaluation of stall test

Condition		Possible cause	
Above specification	In all forward ranges and R position	Insufficient line pressure	Worm oil pump
			Oil leaking from oil pump, control valve, and/ or transaxle case
			Pressure regulator valve sticking
			Pressure control solenoid malfunction
			Pressure modulator valve sticking
	In forward ranges	Forward clutch slippage One-way clutch 1 slippage	
	In D ranges	One-way clutch 2 slippage	
	In S ranges	2-4 brake band slippage	
	In L range and R position	Low and reverse brake slippage	
	In R position	Low and reverse brake slippage Reverse clutch slipping Perform road test to determine whether problem is low and reverse brake or reverse clutch • Engine braking felt in L range: Reverse clutch • Engine braking not felt in L range: Low and reverse brake	
Below specification		Engine out of tune	
		One-way clutch slipping within torque converter	

Time Lag Test

1. Perform mechanical system test preparation. (See K–6 Mechanical System Test Preparation.)
2. Use a stopwatch to measure the time it takes from shifting until shock is felt when shifting the selector lever from N position to D range (non-HOLD mode). Take three measurements for each test and take the average from the results using the following formula.

   Formula:
   Average time lag = (Time 1 + Time 2 + Time 3) / 3

3. Perform the test for the following shifts in the same manner Step 2.
   - N position → D range (HOLD mode)
   - N position → R position

   Time lag
   N position → D range ... 0.4—0.7 s
   N position → R position ... 0.4—0.7 s

Evaluation of time lag test

Condition		Possible Cause
N → D shift	More than specification	Insufficient line pressure Forward clutch slipping Oil leaking from forward clutch fluid circuit Shift solenoid A not operating properly
	Less than specification	Forward accumulator not operating properly Shift solenoid A not operating properly Excessive line pressure
N → D (HOLD) shift	More than specification	Insufficient line pressure Forward clutch slipping Shift solenoid A not operating properly
	Less than specification	Forward accumulator not operating properly Shift solenoid A not operating properly Excessive line pressure
N → R shift	More than specification	Insufficient line pressure Low and reverse brake slipping Reverse clutch slipping Shift solenoid B not operating properly
	Less than specification	Servo apply accumulator not operating properly Shift solenoid B not operating properly Excessive line pressure

ROAD TEST

A6E561401030W02

Warning

- **When performing a road test, be aware of other vehicles, people, impediments, etc. to avoid an accident.**

Note

- When the legal speed limit must be exceeded, use a chassis dynamomenter instead of performing a road test.

Road Test Preparation

1. Inspect the engine coolant levels. (See E–3 ENGINE COOLANT LEVEL INSPECTION.)
2. Inspect the engine oil levels. (See D–4 ENGINE OIL INSPECTION.)
3. Inspect the ATF levels. (See K–12 AUTOMATIC TRANSAXLE FLUID (ATF) INSPECTION.)
4. Inspect the idle speed and ignition timing in P position. (See F–8 IDLE SPEED INSPECTION.)(See F–8 IGNITION TIMING INSPECTION.)
5. Bring up the engine and transaxle to normal operating temperature.

Shift Diagram
D range (normal mode)

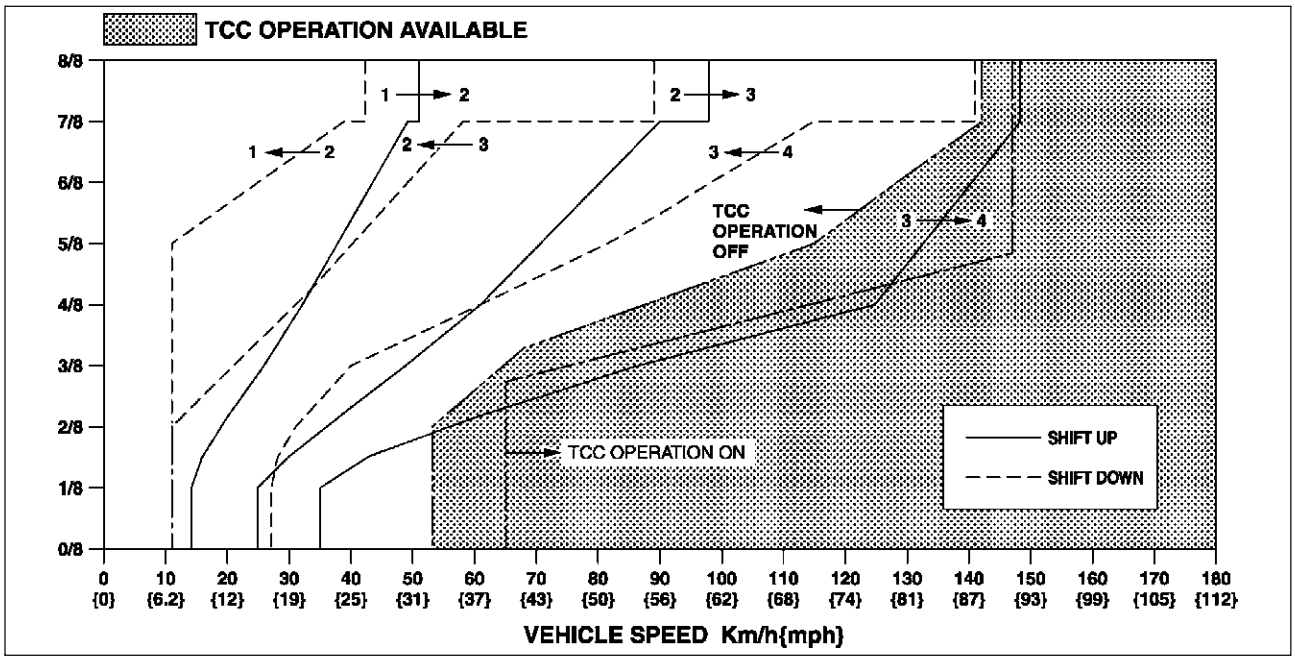

A6E5614W001

D Range Test

1. Perform road test preparation. (See K–9 Road Test Preparation.)
2. Shift the selector lever to D range.
3. Accelerate the vehicle with half and WOT, then verify that 1→2, 2→3, and 3→4 upshifts can be obtained. The shift points must be as shown in the table below.
   - If not as specified, inspect the PCM and ATX. (See K–113 SYMPTOM TROUBLESHOOTING ITEM TABLE.)
4. Drive the vehicle in 4GR, 3GR, and 2GR and verify that kickdown occurs for 4→3, 3→2, 2→1 downshifts, and that the shift points are as shown in the table below.
   - If not as specified, inspect the PCM and ATX.(See K–113 SYMPTOM TROUBLESHOOTING ITEM TABLE.)
5. Decelerate the vehicle and verify that engine braking effect is felt in 2GR, 3GR, and 4GR.
   - If not as specified, inspect the PCM and ATX. (See K–113 SYMPTOM TROUBLESHOOTING ITEM TABLE.)
6. Drive the vehicle and verify that TCC operation is obtained. The operation points must be as shown in the table below.
   - If not as specified, inspect the PCM and ATX. (See K–113 SYMPTOM TROUBLESHOOTING ITEM TABLE.)
7. Select HOLD mode.

8. Accelerate the vehicle at half throttle and WOT, and verify that 4→3, 3→2, and 2→3 shift can be obtained. The shift points must be as shown in the table below.
   - If not as specified, inspect the PCM and ATX. (See K–113 SYMPTOM TROUBLESHOOTING ITEM TABLE.)
9. Drive the vehicle in 4GR, 3GR, 2GR and verify that kickdown does not occur.
   - If not as specified, inspect the PCM and ATX. (See K–113 SYMPTOM TROUBLESHOOTING ITEM TABLE.)
10. Decelerate the vehicle and verify that engine braking effect is felt in 2GR, 3GR, and 4GR.
    - If not as specified, inspect the PCM and ATX. (See K–113 SYMPTOM TROUBLESHOOTING ITEM TABLE.)

Shift point table

Range/Mode		Throttle condition	Shift	Vehicle speed (km/h {mph})	Turbine speed (rpm)
D	NORMAL	WOT	$D_1 \rightarrow D_2$	50—56 {31—34}	5,450—6,050
			$D_2 \rightarrow D_3$	96—104 {60—64}	5,550—5,950
			$D_3 \rightarrow D_4$	145—155 {90—96}	5,600—5,950
			TCC ON(D_4)	152—162 {95—100}	4,250—4,500
		Half throttle	$D_1 \rightarrow D_2$	28—36 {18—22}	3,000—3,900
			$D_2 \rightarrow D_3$	52—68 {33—42}	2,950—3,950
			$D_3 \rightarrow D_4$	108—136 {67—84}	4,150—5,200
			TCC ON(D_4)	95—129 {59—79}	2,650—3,600
		CTP	$D_4 \rightarrow D_3$	24—30 {15—18}	700—800
			$D_3 \rightarrow D_1$	8—14 {5—8}	350—500
		Kickdown (WOT)	$D_4 \rightarrow D_3$	136—146 {85—90}	3,800—4,050
			$D_3 \rightarrow D_2$	85—93 {53—57}	3,300—3,550
			$D_2 \rightarrow D_1$	39—45 {25—27}	2,250—2,550
	POWER	WOT	$D_1 \rightarrow D_2$	50—56 {31—34}	5,450—6,050
			$D_2 \rightarrow D_3$	96—104 {60—64}	5,550—5,950
			$D_3 \rightarrow D_4$	145—155 {90—96}	5,600—5,950
		Half throttle	$D_1 \rightarrow D_2$	35—44 {22—27}	3,800—4,750
			$D_2 \rightarrow D_3$	73—92 {46—57}	4,200—5,200
			$D_3 \rightarrow D_4$	111—139 {69—86}	4,250—5,350
		CTP	$D_4 \rightarrow D_3$	32—38 {20—23}	900—1,050
			$D_3 \rightarrow D_1$	8—14 {5—8}	350—500
		Kickdown (WOT)	$D_4 \rightarrow D_3$	136—146 {85—90}	3,800—4,050
			$D_3 \rightarrow D_2$	85—93{53—57}	3,300—3,550
			$D_2 \rightarrow D_1$	39—45 {25—27}	2,250—2,550
	HOLD	ALL round	$D_2 \rightarrow D_3$	15—25 {10—15}	900—1,400
			$D_4 \rightarrow D_3$	145—151 {90—93}	4,050—4,200
			$D_3 \rightarrow D_2$	7—13 {5—8}	300—450

S Range Test

1. Perform road test preparation. (See K–9 Road Test Preparation.)
2. Shift the selector lever to S range.
3. Accelerate the vehicle at half throttle and WOT, then verify that 1→2 and 2→3 upshifts can be obtained. The shift points must be as shown in the table below.
   - If not as specified, inspect the PCM and ATX. (See K–113 SYMPTOM TROUBLESHOOTING ITEM TABLE.)
4. Drive the vehicle in 2GR, 3GR, 4GR and verify that kickdown occurs for 4→3, 3→2, 2→1 downshift, and that the shift point is as shown in the table below.
   - If not as specified, inspect the PCM and ATX. (See K–113 SYMPTOM TROUBLESHOOTING ITEM TABLE.)
5. Decelerate the vehicle and verify that engine braking effect is felt in 2GR, 3GR and 4GR.
   - If not as specified, inspect the PCM and ATX. (See K–113 SYMPTOM TROUBLESHOOTING ITEM TABLE.)
6. Select HOLD mode.

7. Accelerate the vehicle in 2GR at half throttle and WOT, and verify that 2GR is held.
   - If not as specified, inspect the PCM and ATX. (See K–113 SYMPTOM TROUBLESHOOTING ITEM TABLE.)
8. Decelerate the vehicle and verify that engine braking effect is felt.
   - If not as specified, inspect the PCM and ATX. (See K–113 SYMPTOM TROUBLESHOOTING ITEM TABLE.)

Shift point table

Range/ Mode		Throttle condition	Shift	Vehicle speed (km/h {mph})	Turbine speed (rpm)
S	NORMAL	WOT	$S_1 \rightarrow S_2$	50—56 {31—34}	5,450—6,050
			$S_2 \rightarrow S_3$	96—104 {60—64}	5,550—5,950
		Half throttle	$S_1 \rightarrow S_2$	35—44 {22—27}	3,800—4,750
			$S_2 \rightarrow S_3$	73—92 {46—57}	4,200—5,250
		CTP	$S_4 \rightarrow S_3$	145—151 {90—93}	4,050—4,200
			$S_3 \rightarrow S_1$	8—14 {5—8}	350—500
		Kickdown (WOT)	$S_3 \rightarrow S_2$	85—93 {53—57}	3,300—3,550
			$S_2 \rightarrow S_1$	39—45 {25—27}	2,250—2,550
	HOLD	ALL round	$S_4 \rightarrow S_3$	145—151 {90—93}	4,050—4,200
			$S_3 \rightarrow S_2$	95—101 {59—62}	3,650—3,850

L Range Test

1. Perform road test preparation. (See K–9 Road Test Preparation.)
2. Shift the selector lever to L range.
3. Accelerate the vehicle at half throttle and WOT, then verify that 1→2 upshift. The shift points must be as shown in the table below.
   - If not as specified, inspect the PCM and ATX.(See K–113 SYMPTOM TROUBLESHOOTING ITEM TABLE.)
4. Drive the vehicle in 2GR and verify that kickdown occurs for 2→1 downshift, and that the shift point is as shown in the table below.
   - If not as specified, inspect the PCM and ATX. (See K–113 SYMPTOM TROUBLESHOOTING ITEM TABLE.)
5. Decelerate the vehicle and verify that engine braking effect is felt in 1GR,2GR, 3GR and 4GR.
   - If not as specified, inspect the PCM and ATX. (See K–113 SYMPTOM TROUBLESHOOTING ITEM TABLE.)
6. Select HOLD mode.
7. Accelerate the vehicle in 1GR at half throttle and WOT, and verify that 1GR is held.
   - If not as specified, inspect the PCM and ATX. (See K–113 SYMPTOM TROUBLESHOOTING ITEM TABLE.)
8. Decelerate the vehicle and verify that engine braking effect is felt.
   - If not as specified, inspect the PCM and ATX. (See K–113 SYMPTOM TROUBLESHOOTING ITEM TABLE.)

Shift point table

Range/Mode		Throttle condition	Shift	Vehicle speed (km/h {mph})	Turbine speed (rpm)
L	NORMAL	WOT	$L_1 \rightarrow L_2$	50—56 {31—34}	5,450—6,050
		Half throttle	$L_1 \rightarrow L_2$	35—44 {22—27}	3,800—4,750
		CTP	$L_4 \rightarrow L_3$	145—151 {90—93}	4,050—4,200
			$L_3 \rightarrow L_2$	95—101 {59—62}	3,650—3,850
			$L_2 \rightarrow L_1$	8—14 {5—8}	500—800
		Kickdown (WOT)	$L_4 \rightarrow L_3$	143—153 {89—94}	4,000—4,250
	HOLD	ALL round	$L_4 \rightarrow L_3$	145—151 {90—93}	4,050—4,200
			$L_3 \rightarrow L_2$	95—101 {59—62}	3,650—3,850
			$L_2 \rightarrow L_1$	39—45 {25—27}	2,250—2,500

P Position Test

1. Shift into P position on a gentle slope. Release the brake and verify that the vehicle does not roll.

AUTOMATIC TRANSAXLE FLUID (ATF) INSPECTION

A6E561401030W03

Automatic Transaxle Fluid (ATF) Condition Inspection

1. One way of determining whether the transaxle should be disassembled is by noting:

- If the ATF is muddy or varnished.
- If the ATF smells strange or unusual.

ATF Condition

Condition			Possible cause
Clear red		Normal	—
Light red: pink		Contaminated with water	• Broken oil cooler inside of radiator • Poor filler tube installation: Problem could be occurring to parts inside the transaxle by water contamination. It is necessary to overhaul transaxle and detect defected parts. If necessary, exchange transaxle.
Reddish brown	Has burnt smell and metal specks are found	Deteriorated ATF	Defect powertrain components inside of transaxle: Specks cause wide range of problems by plugging up in oil pipe, control valve body and oil cooler in radiator. • When large amount of metal specks are found, overhaul transaxle and detect defected parts. If necessary, exchange transaxle. • Implement flushing operation as there is a possibility to have specks plugging up oil pipe and/or oil cooler inside of radiator.
	Has no burnt smell	Normal	• Discoloration by oxidation

Automatic Transaxle Fluid (ATF) Level Inspection

Caution

- **The ATF amount varies according to ATF's temperature. Therefore, when checking the ATF level or replacing the ATF, use a thermometer to measure the temperature then adjust the ATF amount to the specified level according to the specified temperature.**

1. Park the vehicle on level ground.
2. Apply the parking brake and position wheel chocks securely to prevent the vehicle from rolling.
3. Adjust the length or thermistor probe to measure the same depth as the depth gauge and hold the probe with a paper holder. Insert into the filler tube and measure the temperature.
   - If necessary, inspect the ATF before warming up the engine. In this case, use the cool range.**15—25 °C {59—77 °F}**
4. Warm up the engine until the ATF reaches **60—70 °C {140—158 °F}**.
5. Shift the selector lever and pause momentarily in each range (D—L) while depressing the brake pedal.
6. Shift the selector lever to P position.
7. Verify that the ATF level is in the HOT range (65 °C{149 °F}) while the engine is idling.
   - If necessary, add ATF to the specification.

ATF type
ATF M-V

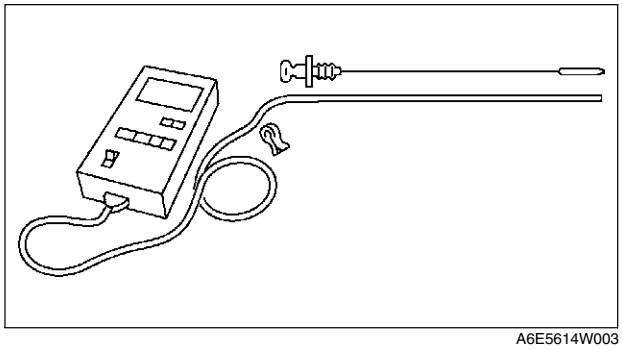

A6E5614W003

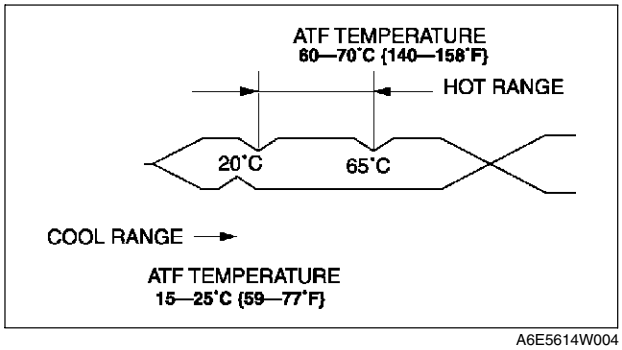

A6E5614W004

AUTOMATIC TRANSAXLE FLUID (ATF) REPLACEMENT

A6E561401030W04

Warning
- **When the transaxle and ATF are hot, they can badly burn you. Turn off the engine and wait until they are cool before changing the ATF.**

1. Remove the oil dipstick.
2. Remove the oil drain plug and washer.
3. Drain the ATF into a container.
4. Install a new washer and the drain plug.

Tightening torque
30—41 N·m {3.0—4.2 kgf·m, 22—30 ft·lbf}

5. Add the specified ATF until ATF level reaches lower notch of dipstick type of ATF through the oil filler tube.

ATF type
ATF M-V

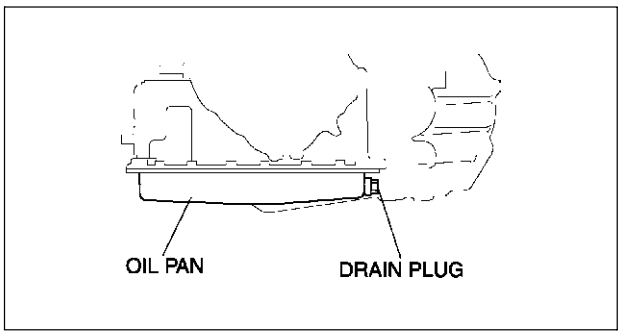

A6E5614W005

6. Ensure that the ATF level is in the HOT range (65 °C{149 °F}).
   - Add ATF to the specified level as necessary.

HOLD SWITCH INSPECTION

A6E561446030W01

Operating Inspection

1. Turn the ignition switch to ON (engine OFF).
2. Verify that the HOLD indicator light is not illuminated. Depress the HOLD switch and verify that the HOLD indicator light illuminates.
   - If not as specified, inspect the terminal voltage of the HOLD switch.

Voltage Inspection

1. Remove the console.
2. Turn the ignition switch to ON (engine OFF).
3. Measure the voltage at the HOLD switch connector.
   - If not as specified, inspect for continuity at the HOLD switch.

HOLD switch position	Connector terminal	
	C	D
Normal	B+	0
Depressed	0	0

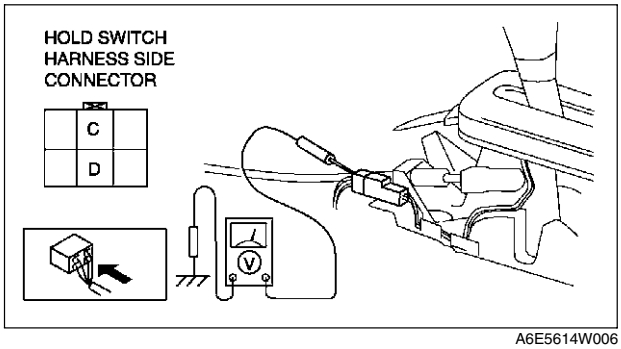

A6E5614W006

Continuity Inspection of

1. Disconnect the negative battery cable.
2. Remove the console.
3. Disconnect the HOLD switch connector.
4. Inspect continuity at the HOLD switch.
   - If the switch is okay, inspect the wiring harness. (HOLD switch—PCM, HOLD switch—Body ground)
   - If not as specified, replace the HOLD switch. (See K–14 HOLD SWITCH REMOVAL/INSTALLATION.)
5. Connect the HOLD switch connector.
6. Install the console.
7. Connect the negative battery cable.

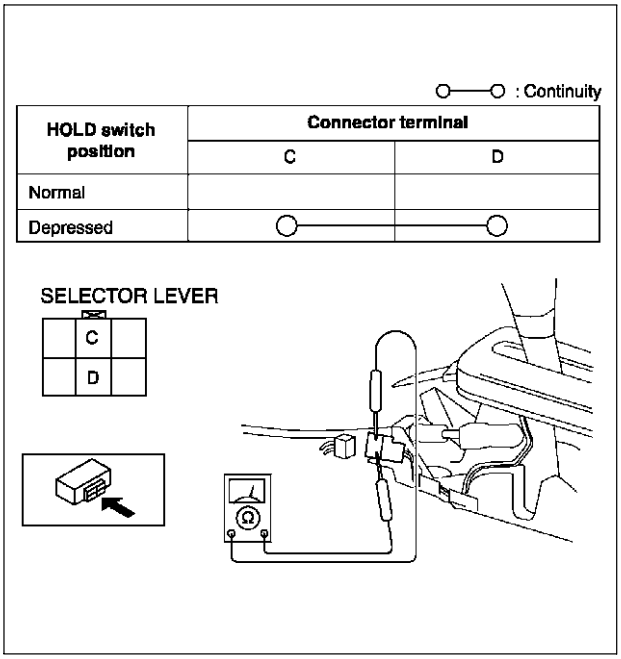

A6E5614W007

HOLD SWITCH REMOVAL/INSTALLATION

A6E561446030W02

1. Disconnect the negative battery cable.
2. Remove the console.
3. Disconnect the connector and remove the HOLD switch terminals. (See K–51 SELECTOR LEVER DISASSEMBLY/ASSEMBLY.)
4. Remove the selector lever knob component.
5. Remove the HOLD switch.
6. Install the HOLD switch to selector lever knob component.
7. Install selector lever knob component.

   Tightening torque
   15.68—22.54 N·m {1.599—2.298 kgf·m, 12—16 ft·lbf}

8. Install the HOLD switch terminals and connect the connector.
9. Install the console.
10. Connect the negative battery cable.

TRANSAXLE RANGE (TR) SWITCH INSPECTION

A6E561419440W01

Operating Inspection

1. Verify that the starter operates only when the ignition switch is at the START position with the selector lever in P or N position.
   - If not as specified, adjust the TR switch.
2. Verify that the back-up lights illuminate when shifted to R position with the ignition switch at the ON position.
   - If not as specified, adjust the TR switch.

Continuity Inspection

Caution

- **Water or foreign objects entering the connector can cause a poor connection or corrosion. Be sure not to drop water or foreign objects on the connector when disconnecting it.**

1. Disconnect the negative battery cable.
2. Remove the air cleaner component. (See F–10 INTAKE-AIR SYSTEM REMOVAL/INSTALLATION.)

3. Disconnect the TR switch connector.

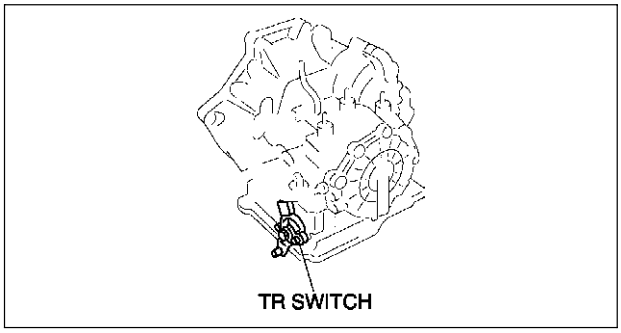

A6E5614W008

4. Inspect for continuity at the TR switch.
   - If not as specified, adjust the TR switch and go to Step 4.
5. Reinspect for continuity at TR switch.
   - If not as specified, replace the TR switch. (See K–15 TRANSAXLE RANGE (TR) SWITCH REMOVAL/INSTALLATION.)
6. Connect the TR switch connector.
7. Install the air cleaner component. (See F–10 INTAKE-AIR SYSTEM REMOVAL/INSTALLATION.)
8. Connect the negative battery cable.

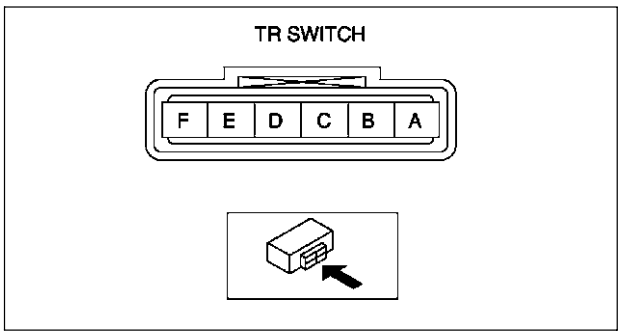

A6E5614W010

K

TRANSAXLE RANGE (TR) SWITCH REMOVAL/INSTALLATION

A6E561419440W02

1. Disconnect the negative battery cable.
2. Remove the air cleaner component. (See F–10 INTAKE-AIR SYSTEM REMOVAL/INSTALLATION.)

Caution
- **Water or foreign objects entering the connector can cause a poor connection or corrosion. Be sure not to drop water or foreign objects on the connector when disconnecting it.**

3. Disconnect the TR switch connector.
4. Remove the clip and disconnect the selector cable.

Caution
- **Do not use an impact wrench. Hold the manual shaft lever when removing the manual shaft nut, or the transaxle may be damaged.**

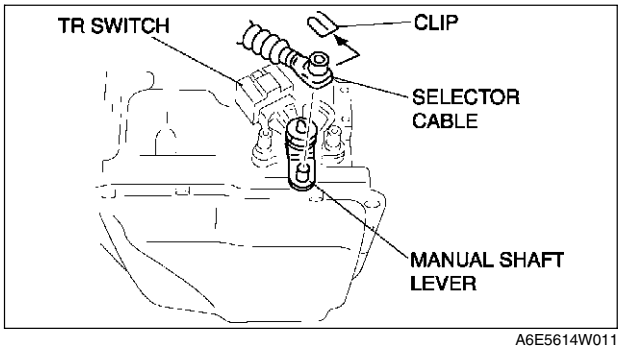

A6E5614W011

5. Set the adjustable wrench as shown to hold the manual shaft lever.
6. Remove the manual shaft nut and washer.

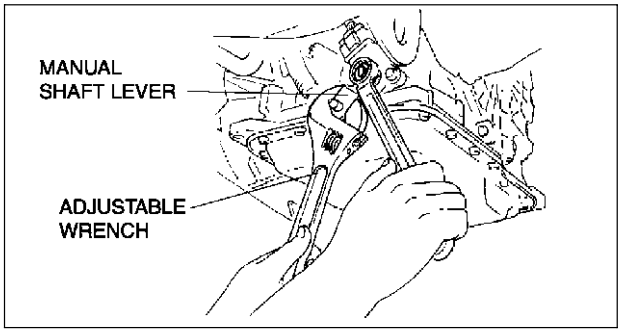

A6E5614W100

7. Remove the manual shaft lever.
8. Remove the TR switch.

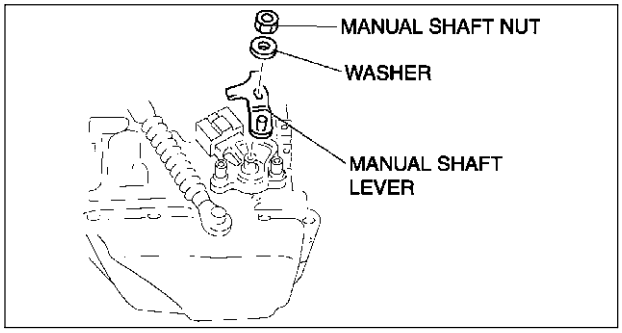

A6E5614W012

9. Rotate the manual shaft to the converter housing side fully, then return 2 notches to set the N position.

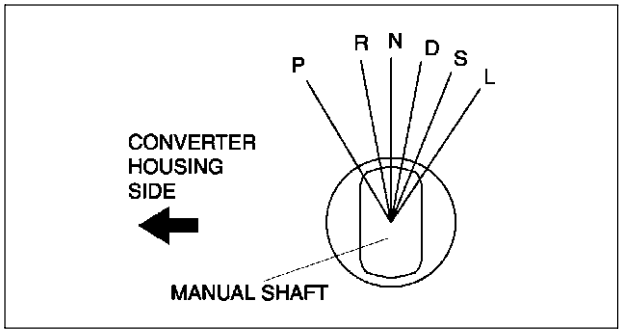

A6E5614W013

10. Turn the protrusion at resistance between the terminals B and C become 750 ohms.

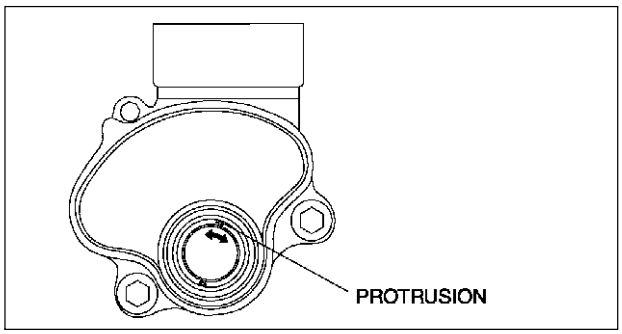

A6E5614W014

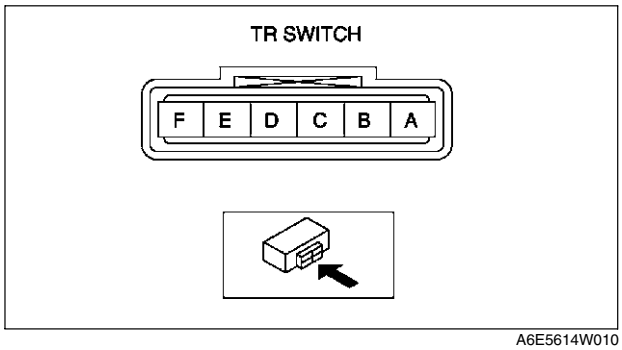

A6E5614W010

11. Install the TR switch while aligning the protrusion and groove as shown.
12. Hand-tighten the TR switch mounting bolts.

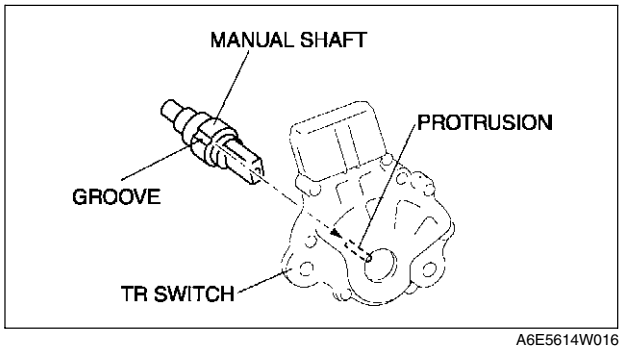

A6E5614W016

13. Inspect the resistance between the terminals B and C.
    - If not as specified, readjust the TR switch. (See K–18 TRANSAXLE RANGE (TR) SWITCH ADJUSTMENT.)

    Resistance
    750 ohms

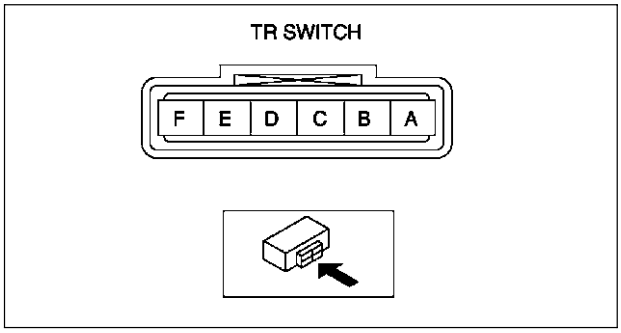

A6E5614W010

14. Tighten the TR switch mounting bolts.

    Tightening torque
    8—11 N·m {82—112 kgf·cm, 71—97 in·lbf}

    Caution
    - **Do not use an impact wrench. Hold the manual shaft lever when removing the manual shaft nut, or the transaxle may be damaged.**

15. Install the manual shaft lever and the washer.

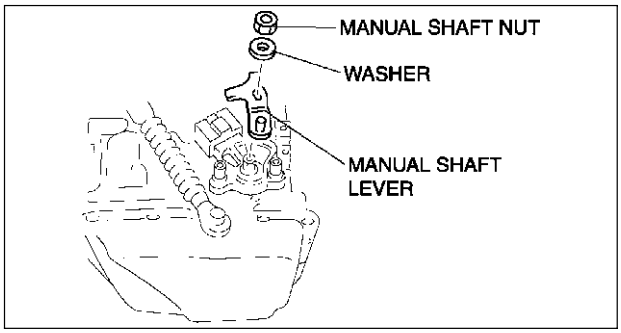

A6E5614W012

16. Set the adjustable wrench as shown to hold the manual shaft lever, and tighten the manual shaft nut.

    Tightening torque
    32—46 N·m {3.2—4.7 kgf·m, 24—33 ft·lbf}

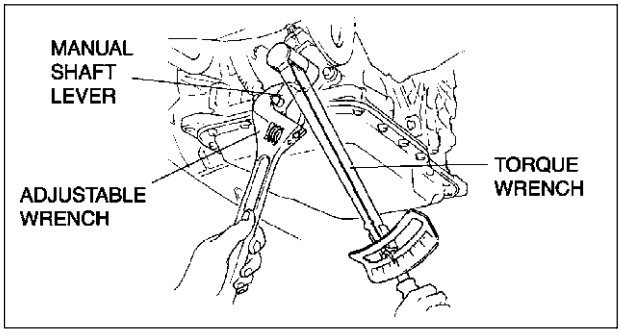

A6E5614W101

17. Install the clip to the SELECTOR CABLE as shown in the figure.
18. Shift the selector lever to P position.
19. Turn the manual shaft lever to P position.

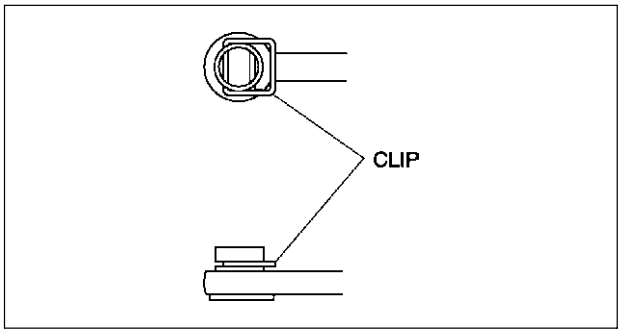

A6E5614W018

20. Connect the selector cable.
21. Inspect for continuity at the TR switch. (See K–14 TRANSAXLE RANGE (TR) SWITCH INSPECTION.)
    - If not as specified, readjust the TR switch. (See K–18 TRANSAXLE RANGE (TR) SWITCH ADJUSTMENT.)
22. Connect the TR switch connector.
23. Install the aircleaner component. (See F–10 INTAKE-AIR SYSTEM REMOVAL/INSTALLATION.)
24. Connect the negative battery cable.
25. Inspect operation of the TR switch. (See K–14 TRANSAXLE RANGE (TR) SWITCH INSPECTION.)
    - If not as specified, readjust the TR switch. (See K–18 TRANSAXLE RANGE (TR) SWITCH ADJUSTMENT.)

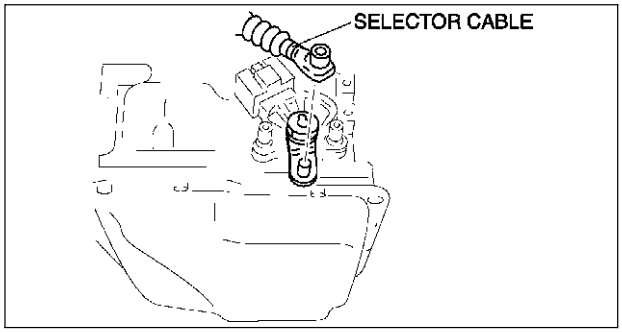

A6E5614W019

TRANSAXLE RANGE (TR) SWITCH ADJUSTMENT

A6E561419440W03

1. Disconnect the negative battery cable.
2. Remove the air cleaner component. (See F–10 INTAKE-AIR SYSTEM REMOVAL/INSTALLATION.)

Caution

- **Water or foreign objects entering the connector can cause a poor connection or corrosion. Be sure not to drop water or foreign objects on the connector when disconnecting it.**

3. Remove the clip and disconnect the selector cable.

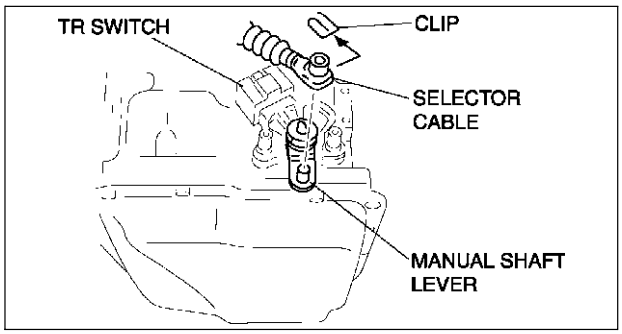

A6E5614W011

4. Rotate the manual shaft to the converter housing side fully, then return 2 notches to set the N position.

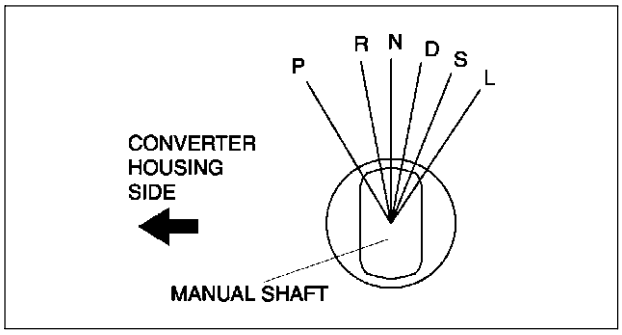

A6E5614W013

5. Disconnect the TR switch connector.

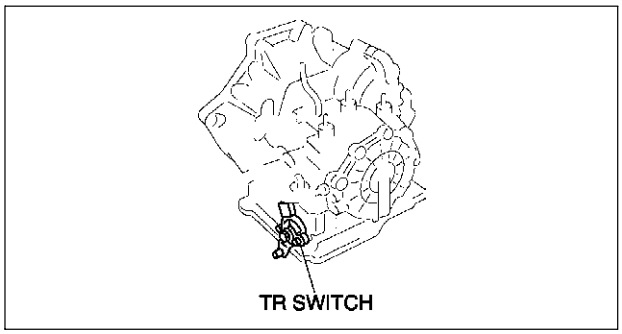

A6E5614W008

6. Loosen the TR switch mounting bolts.

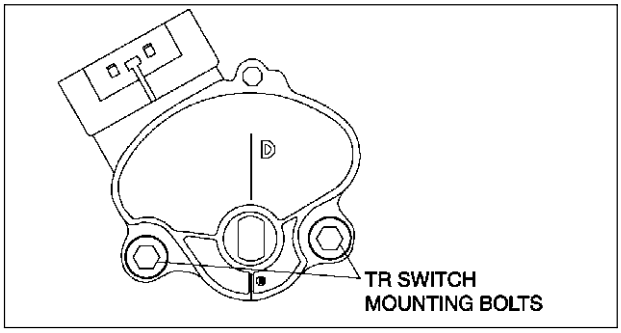

A6E5614W020

7. Measure the resistance between the terminals B and C.
8. Adjust the switch to the point as follow.

Resistance standard value
750 ohms

9. Tighten the TR switch mounting bolts.

Tightening torque
8—11 N·m {82—112 kgf·cm, 71—97 in·lbf}

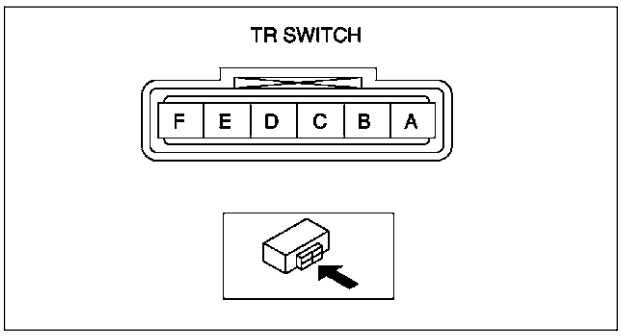

A6E5614W010

10. Move the selector lever to N position.
11. Verify that the TR switch is aligned with N position.
12. Connect the TR switch connector.
13. Install the clip to the selector cable as shown in the figure.

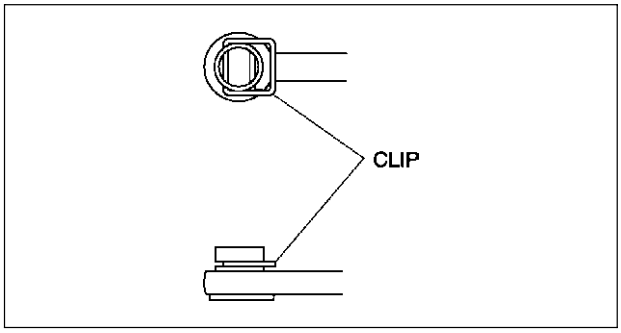

A6E5614W018

14. Connect the selector cable to the manual shaft lever as shown in the figure.
15. Inspect operation of the TR switch. (See K–14 TRANSAXLE RANGE (TR) SWITCH INSPECTION.)
    - If not as specified, readjust the TR switch.
16. Install the air cleaner component. (See F–10 INTAKE-AIR SYSTEM REMOVAL/INSTALLATION.)
17. Connect the negative battery cable.

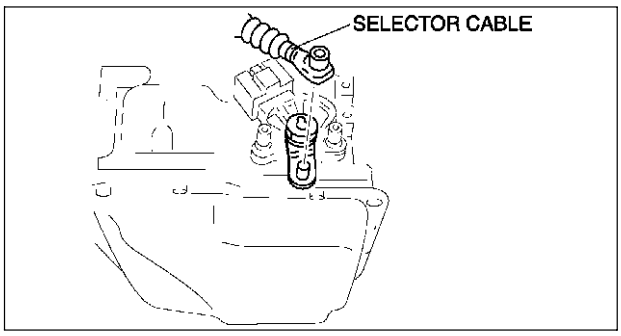

A6E5614W019

TRANSAXLE FLUID TEMPERATURE (TFT) SENSOR INSPECTION

A6E561419010W01

On-Vehicle Inspection

1. Disconnect the negative battery cable.
2. Remove the air cleaner component. (See F–10 INTAKE-AIR SYSTEM REMOVAL/INSTALLATION.)

Caution
- **Water or foreign objects entering the connector can cause a poor connection or corrosion. Be sure not to drop water or foreign objects on the connector when disconnecting it.**

3. Disconnect the transaxle connector.

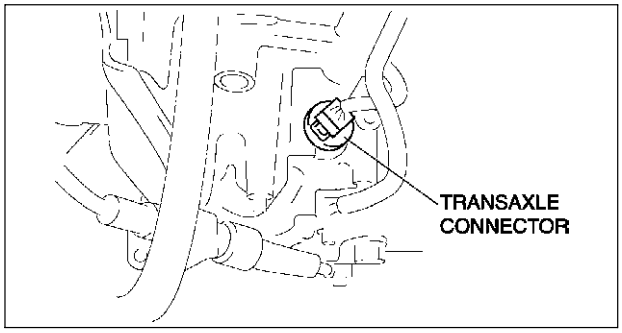

A6E5614W021

4. Measure the resistance between the terminals E and H.
   - If it is out of specification, perform the off-vehicle inspection of TFT sensor. (See K–21 TRANSAXLE FLUID TEMPERATURE (TFT) SENSOR REMOVAL/INSTALLATION.)

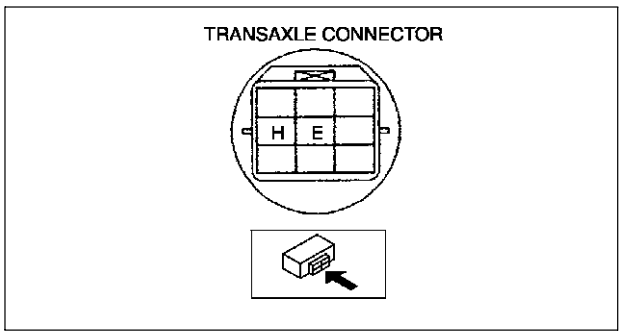

A6E5614W022

ATF temperature (°C {°F})	Resistance (kilohm)
–20 {–4}	236—324
0 {32}	84.3—110
20 {68}	33.5—42.0
40 {104}	14.7—17.9
60 {140}	7.08—8.17
80 {176}	3.61—4.15
100 {212}	1.96—2.24
120 {248}	1.13—1.28
130 {266}	0.87—0.98

5. Install the air cleaner component. (See F–10 INTAKE-AIR SYSTEM REMOVAL/INSTALLATION.)
6. Connect the negative battery cable.

Off-Vehicle Inspection

Warning
- **When the transaxle and ATF are hot, they can badly burn. Turn off the engine and wait until they are cool before replacing ATF.**

1. Remove the control valve body. (See K–34 CONTROL VALVE BODY REMOVAL.)
2. Remove the transaxle connector.
3. Remove the TFT sensor from the strainer, and connect it to the transaxle connector.
4. Place the TFT sensor and a thermometer in ATF as shown, and heat the ATF gradually.

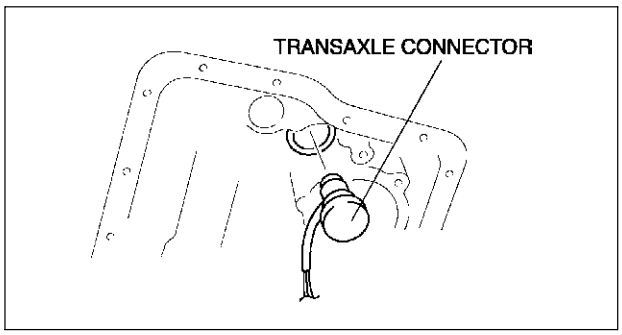

A6E5614W023

5. Measure resistance between the terminals of the TFT sensor.
   - If not as specified, replace the TFT sensor. (See K–21 TRANSAXLE FLUID TEMPERATURE (TFT) SENSOR REMOVAL/INSTALLATION.)

ATF temperature (°C {°F})	Resistance (kilohm)
-20 {-4}	236—324
0 {32}	84.3—110
20 {68}	33.5—42.0
40 {104}	14.7—17.9
60 {140}	7.08—8.17
80 {176}	3.61—4.15
100 {212}	1.96—2.24
120 {248}	1.13—1.28
130 {266}	0.87—0.98

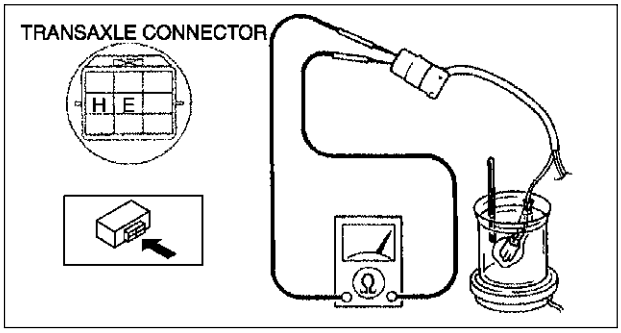

A6E5614W024

6. Disconnect the TFT sensor from the transaxle connector, and install it to the oil strainer.
7. Install the transaxle connector.
8. Install the control valve body. (See K–35 CONTROL VALVE BODY INSTALLATION.)

K

TRANSAXLE FLUID TEMPERATURE (TFT) SENSOR REMOVAL/INSTALLATION

A6E561419010W02

Warning

- **When the transaxle and ATF are hot, they can badly burn. Turn off the engine and wait until they are cool before replacing the ATF.**

1. Remove the oil pan. (See K–34 CONTROL VALVE BODY REMOVAL.)
2. Disconnect the TFT sensor connector.
3. Remove the TFT sensor.
4. Install a TFT sensor.
5. Connect the TFT sensor connector.
6. Install the oil pan. (See K–35 CONTROL VALVE BODY INSTALLATION.)
7. Carry out the mechanical system test. (See K–6 MECHANICAL SYSTEM TEST.)

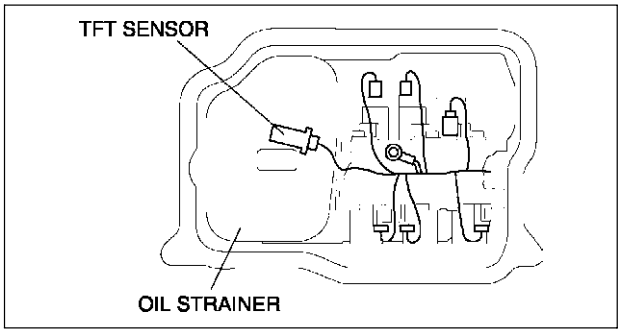

A6E5614W025

OIL PRESSURE SWITCH INSPECTION

A6E561421550W01

Caution

- **Water or foreign objects entering the connector can cause poor connection or corrosion. Be sure not to drop water or foreign objects on the connector when disconnecting it.**

On-vehicle Inspection (harness inspection)

1. Disconnect the negative battery cable.
2. Remove the under cover.

3. Disconnect the cord assembly connector.

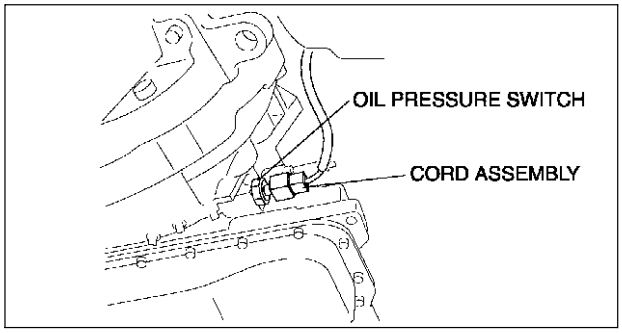

A6E5614W026

4. Verify that there is no continuity between cord assembly terminal and ground.
   - If as continuity, inspect the cord assembly.
   - If the cord assembly is okay, inspect the oil pressure switch. (See K–22 On-vehicle Inspection (oil pressure switch inspection).)
5. Connect the cord assembly connector.
6. Install the under cover.
7. Connect the negative battery cable.

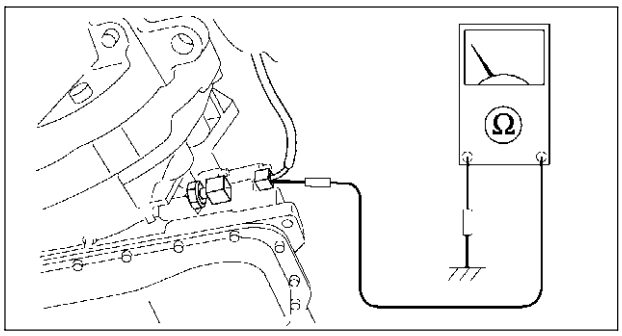

A6E5614W027

On-vehicle Inspection (oil pressure switch inspection)

1. Remove the under cover.
2. Disconnect the cord assembly connector.
3. Start the engine, with gear position in N or P.
4. Reaffirm that there is no continuity between cord assembly terminal and ground.
5. Firmly depress the brake pedal with the left foot.
6. Shift the selector lever to D range.

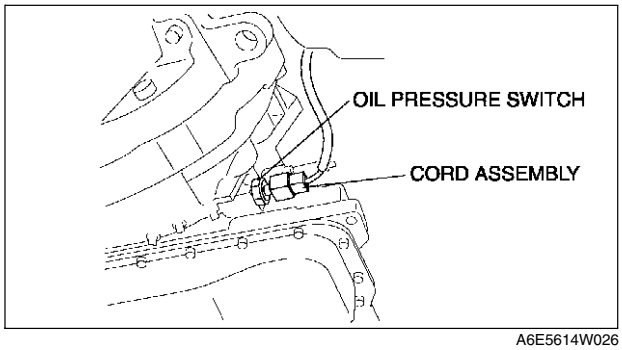

A6E5614W026

7. Verify that there is no continuity between cord assembly terminal and ground.
   - If not as specified,replace the oil pressure switch. (See K–23 OIL PRESSURE SWITCH REMOVAL/INSTALLATION.)
8. Connect the oil pressure switch connector.
9. Install the under cover.
10. Connect the negative battery cable.

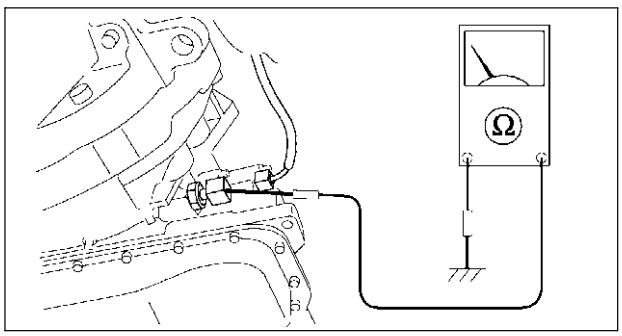

A6E5614W094

Off-vehicle inspection

1. Remove the oil pressure switch.
2. Apply air pressure at 400—440 kPa {4.1—4.4kgf/cm^2,58—63psi}
3. Inspect continuity the between oil pressure switch terminal and screw part.
   - If not as continuity, replace the oil pressure switch. (See K–23 OIL PRESSURE SWITCH REMOVAL/INSTALLATION.)
4. Install the oil pressure switch.

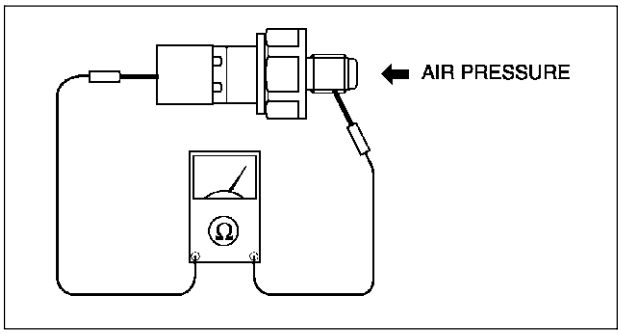

A6E5614W028

OIL PRESSURE SWITCH REMOVAL/INSTALLATION

A6E561421550W02

Warning

- **When the transaxle and ATF are hot, they can badly burn. Turn off the engine and wait untill they are cool before replacing ATF.**

K

1. Disconnect the negative battery cable.
2. Remove the under cover.
3. Disconnect the cord assembly connector.
4. Remove the oil pressure switch.
5. Install the oil pressure switch.

Tightening torque
17.1—22.1N·m {1.75—2.25kgf·m, 13—16ft·lbf}

6. Connect the oil pressure switch connector.
7. Install the under cover.
8. Connect the negative battery cable.

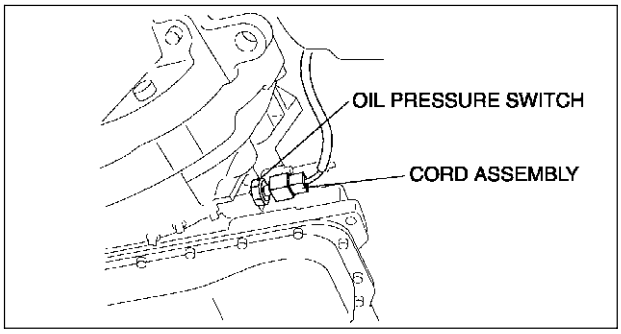

A6E5614W026

INPUT/TURBINE SPEED SENSOR INSPECTION

A6E561421550W03

Caution

- **Water or foreign objects entering the connector can cause a poor connection or corrosion. Be sure not to drop water or foreign objects on the connector when disconnecting it.**

1. Disconnect the negative battery cable.
2. Remove the battery and battery tray.
3. Remove the air cleaner component. (See F–10 INTAKE-AIR SYSTEM REMOVAL/INSTALLATION.)
4. Disconnect the input/turbine speed sensor connector.

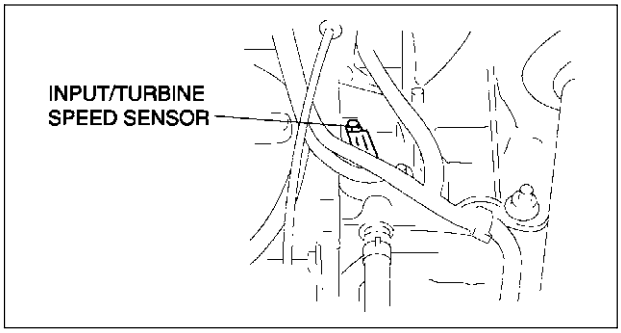

A6E5614W030

5. Measure resistance between the terminals of the input/turbine speed sensor.
   - If not as specified, replace the input/turbine speed sensor.

   Resistance
   250—600 ohms (ATF temperature: –40—160 °C {–40—320 °F})

6. Connect the input/turbine speed sensor connector.
7. Install the air cleaner component. (See F–10 INTAKE-AIR SYSTEM REMOVAL/INSTALLATION.)
8. Install the battery and battery tray.
9. Connect the negative battery cable.

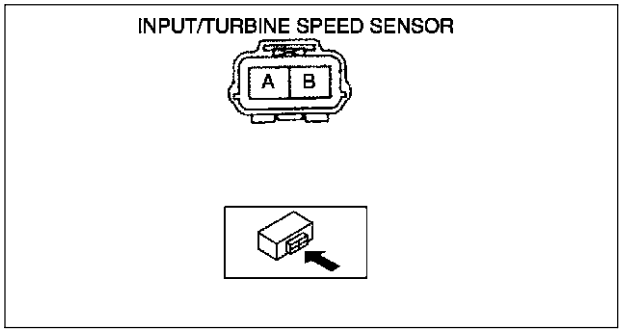

A6E5614W031

INPUT/TURBINE SPEED SENSOR REMOVAL/INSTALLATION

A6E561421550W04

1. Disconnect the negative battery cable.
2. Remove the battery and battery tray.
3. Remove the air cleaner component. (See F–10 INTAKE-AIR SYSTEM REMOVAL/INSTALLATION.)
4. Disconnect the input/turbine speed sensor connector.
5. Remove the input/turbine speed sensor.
6. Apply ATF to a new O-ring and install it on a new input/turbine speed sensor.
7. Install the input/turbine speed sensor.

   Tightening torque
   8—11 N·m {82—112 kgf·cm, 71—97 in·lbf}

8. Connect the input/turbine speed sensor connector.
9. Install the air cleaner component. (See F–10 INTAKE-AIR SYSTEM REMOVAL/INSTALLATION.)
10. Install the battery and battery tray.
11. Connect the negative battery cable.

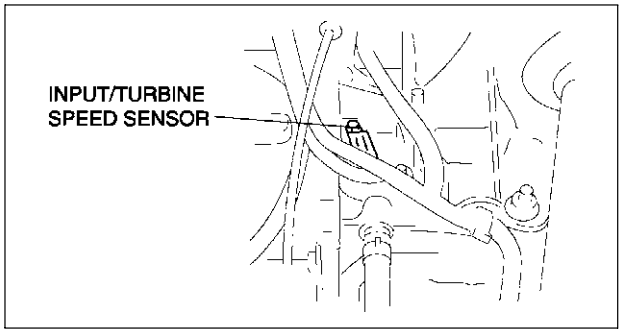

A6E5614W030

VEHICLE SPEEDOMETER SENSOR (VSS) INSPECTION

A6E561401030W05

Visual Inspection

1. Remove the VSS. (See K–26 VEHICLE SPEEDOMETER SENSOR (VSS) REMOVAL/INSTALLATION.)
2. Make sure that the sensor is free of any metallic shavings or particles.
   - If any are found on the sensor, clean them off.
3. Install the VSS. (See K–26 VEHICLE SPEEDOMETER SENSOR (VSS) REMOVAL/INSTALLATION.)

Wave profile Inspection

1. Remove the PCM. (See F–43 PCM REMOVAL/INSTALLATION.)
2. Connect WDS or equivalent to DLC connector.
3. Connect osilloscope test leads to the following PCM connector terminals.
   - (+) lead: PCM terminal 3C
   - (-) lead: PCM terminal 1D
4. Start the engine.
5. Monitor VSS PID.

6. Inspect wave profile.
   - PCM terminal: 3C (+) - 1D (-)
   - Oscilloscope setting: 1 V/DIV (Y), 2.5 ms/DIV (X), DC range
   - Vehicle condition: drive the vehicle with 32 km/h{20 mph}
     — If wave profile or voltage are out of specifications, carry out the “Open Circuit Inspection” or “Short Circuit Inspection”

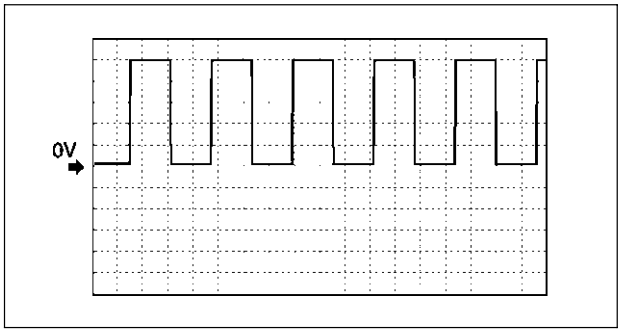

A6E5614W102

Power Supply Voltage Inspection

1. Disconnect the VSS connector.
2. Turn the ignition switch to ON.
3. Measure voltage at VSS connector terminal B (wiring harness side).

   Specification
   4.5—5.5 V

   - If voltage is okay, go to Open Circuit Inspection and Short Circuit Inspection.
   - If voltage is wrong, repair wiring harness between VSS and PCM.

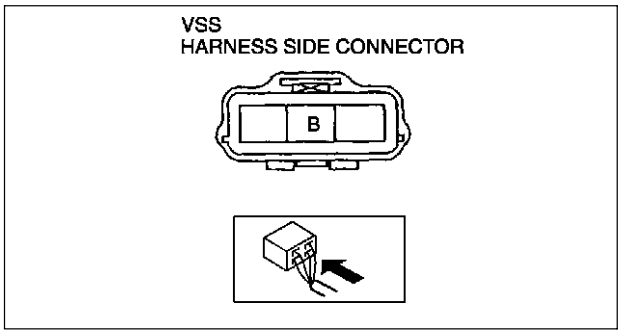

A6E5614W033

Open Circuit Inspection

1. Inspect the following circuit for open.
   - Power circuit (VSS connector terminal A to main relay terminal D)
   - Ground circuit (VSS connector terminal C to GND)
   - If an open circuit or short circuit is found, repair the malfunctioning wiring harness.
   - If there are no open or short circuits, perform the sensor rotor inspection.

Short Circuit Inspection

1. Inspect the following circuit for short.
   - Power circuit (VSS connector terminal A to main relay terminal D)
   - If an open circuit or short circuit is found, repair the malfunctioning wiring harness.
   - If there are no open or short circuits, perform the sensor rotor inspection.

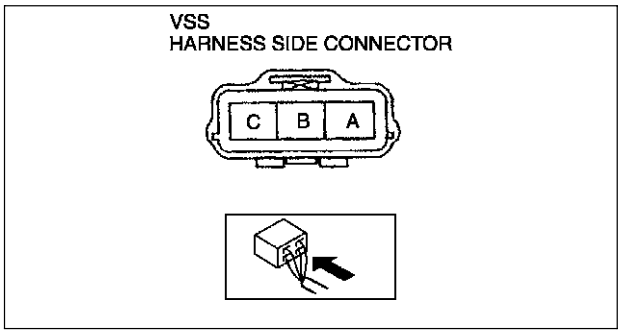

A6E5614W035

Sensor Rotor Inspection

1. Remove the VSS. (See K–26 VEHICLE SPEEDOMETER SENSOR (VSS) REMOVAL/INSTALLATION.)
2. Shift the selector lever to N position.
3. Inspect sensor rotor surface via VSS installation hole while rotating the front tire manually.
   (1) Is sensor rotor free of damage and cracks?
   (2) Is sensor rotor free of any metallic shavings or particles?
   - If sensor rotor is okay, replace the VSS.
   - If there is a problem, clean or replace the sensor rotor.

VEHICLE SPEEDOMETER SENSOR (VSS) REMOVAL/INSTALLATION

A6E561401030W06

Caution
- **Water or foreign objects entering the connector can cause a poor connection or corrosion. Be sure not to drop water or foreign objects on the connector when disconnecting it.**
- **If foreign materials are stuck to the VSS, disturbance by magnetic flux can cause sensor output to be abnormal and thereby negatively affect control. Make sure that foreign materials such as iron filings are not stuck to the VSS during installation.**

1. Disconnect the negative battery cable.
2. Remove the under cover.
3. Disconnect the VSS connector.
4. Remove the VSS.
5. Apply ATF to a new O-ring and install it on a new VSS.

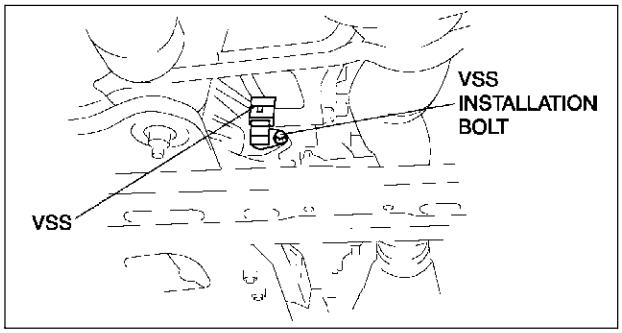

A6E5614W037

6. Install the VSS.

Tightening torque
8—11 N·m {82—112 kgf·cm, 71—97 in·lbf}

7. Connect the VSS connector.
8. Install the under cover.
9. Connect the negative battery cable.

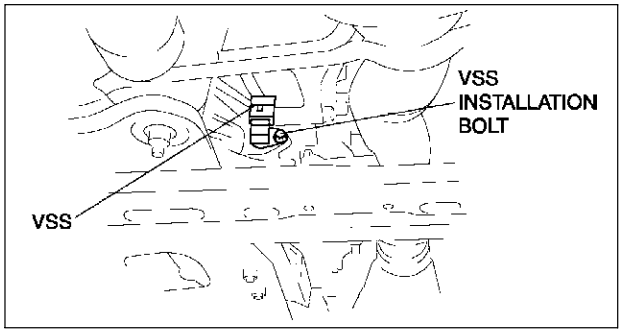

A6E5614W037

SOLENOID VALVE INSPECTION

A6E561421280W01

Resistance Inspection (On-Vehicle Inspection)

Caution
- **Water or foreign objects entering the connector can cause a poor connection or corrosion. Be sure not to drop water or foreign objects on the connector when disconnecting it.**

1. Disconnect the negative battery cable.
2. Remove the air cleaner component. (See F–10 INTAKE-AIR SYSTEM REMOVAL/INSTALLATION.)
3. Disconnect the transaxle connector.

Note
- When inspecting the pressure control solenoid, connect the ground connection to the ground terminal (terminal I) of the pressure control solenoid inside the solenoid valve connector.

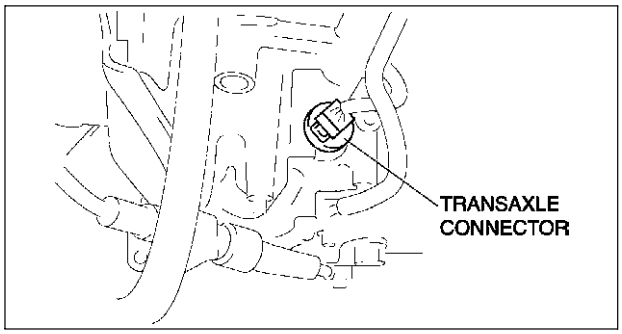

A6E5614W021

4. Measure the resistance between the following terminals.
   - If not as specified, inspect the ground, then perform the operating inspection.

ATF temperature: –40—150 °C {–40—302 °F}

Terminal	Solenoid valve	Resistance (ohm)
A—GND	Shift solenoid A	1.0—4.2
C—GND	Shift solenoid B	1.0—4.2
G—GND	Shift solenoid C	1.0—4.2
B—GND	Shift solenoid D	10.9—26.2
F—GND	Shift solenoid E	10.9—26.2
D—I	Pressure control	2.4—7.3

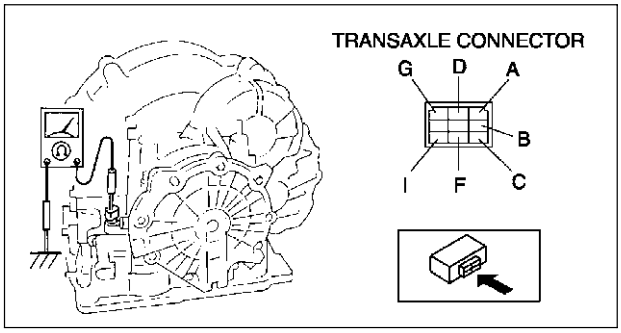

A6E5614W039

5. Connect the transaxle connector.
6. Install the air cleaner component. (See F–10 INTAKE-AIR SYSTEM REMOVAL/INSTALLATION.)
7. Connect the negative battery cable.

Operating Inspection

1. Disconnect the transaxle connector.

Caution
- **Do not apply battery position voltage to terminals A, B, C, D, F and G for more than three seconds.**

Note
- Because the operation sound of the valves is small, perform inspection in a quiet place.

2. Apply battery positive voltage to terminals A,B,C, F or G and battery negative voltage to GND, and verify that operating sound is heard from solenoid.
   - If the "click" is not heard, inspect the transaxle harness.
     — If the transaxle harness is okay, perform the resistance inspection (off-vehicle inspection).
     — If there is a problem, repair or replace the transaxle harness.
3. Apply battery positive voltage to terminal D and battery negative voltage to terminal I, and verify that operating sound is heard from solenoid.
   - If the "click" is not heard, inspect the transaxle harness.
     — If transaxle harness is okay, perform the resistance inspection (off-vehicle inspection)
     — If there is a problem, repair or replace the transaxle harness.

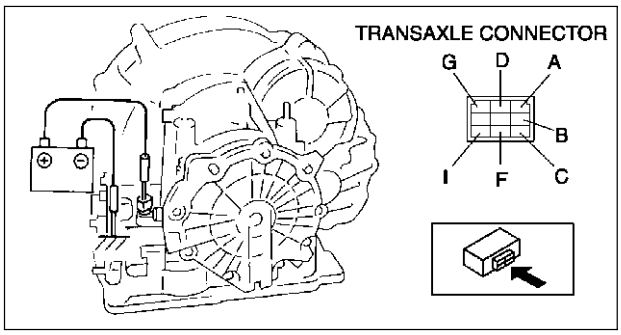

A6E5614W040

Resistance Inspection (Off-Vehicle Inspection)

1. Remove the control valve body. (See K–28 SOLENOID VALVE REMOVAL/INSTALLATION.)
2. Measure the resistance of each solenoid valve individually.
   - If not as specified, replace the solenoid valve.
3. Install the control valve body. (See K–28 SOLENOID VALVE REMOVAL/INSTALLATION.)

Pressure control solenoid

Resistance
2.4—7.3 ohms
(ATF temperature: –40—150 °C {–40—302 °F})

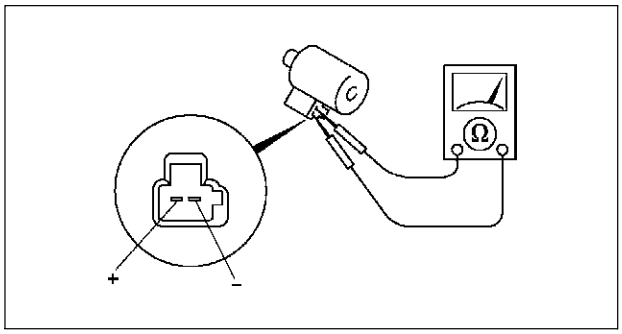

A6E5614W041

Shift solenoid A, B, C

Resistance
1.0—4.2 ohms
(ATF temperature: –40—150 °C {–40—302 °F})

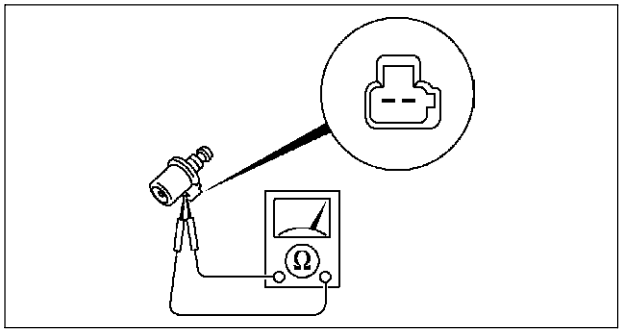

A6E5614W042

Shift solenoid D, E

Resistance
10.9—26.2 ohms
(ATF temperature: –40—150 °C {–40—302 °F})

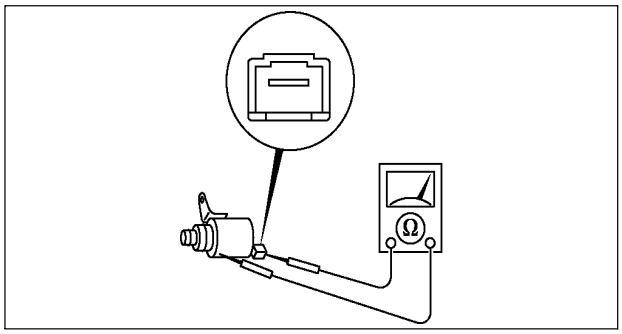

A6E5614W043

SOLENOID VALVE REMOVAL/INSTALLATION

A6E561421280W02

1. Disconnect the negative battery cable.
2. Remove the under cover.
3. Remove the control valve body. (See K–34 CONTROL VALVE BODY REMOVAL.)
4. Remove the solenoid valve(s).
5. Apply ATF to a new O-ring and install it on the solenoid valve.

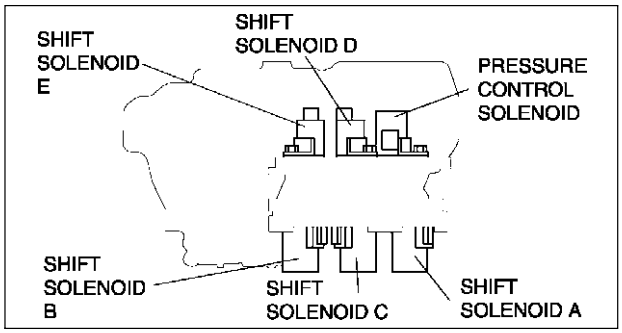

A6E5614W044

6. Install the solenoid valve in the control valve body.

Tightening torque
7.8—10.8 N·m
{80—110 kgf·cm, 70—95.4 in·lbf}

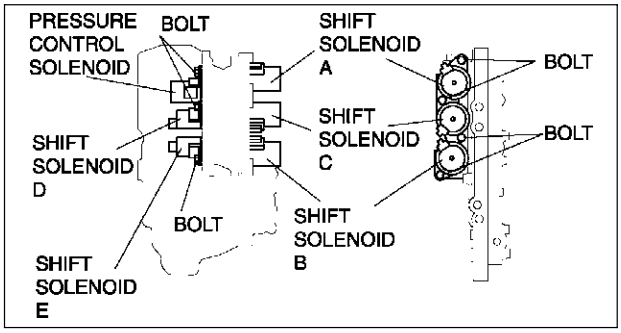

A6E5614W045

7. Install the control valve body. (See K–34 CONTROL VALVE BODY REMOVAL.)
8. Install the under cover.
9. Connect the negative battery cable.
10. Add ATF and, with the engine idling, inspect the ATF level and inspect for leakage. (See K–12 Automatic Transaxle Fluid (ATF) Level Inspection.)
11. Carry out the mechanical system test. (See K–6 MECHANICAL SYSTEM TEST.)
12. Carry out the road test. (See K–9 ROAD TEST.)

PCM INSPECTION

A6E561418880W01

1. Inspect the PCM. (See F–45 PCM INSPECTION.)

PCM REMOVAL/INSTALLATION

A6E561418880W02

1. Remove and install the PCM. (See F–43 PCM REMOVAL/INSTALLATION.)

AUTOMATIC TRANSAXLE REMOVAL/INSTALLATION

A6E561401030W07

1. Disconnect the negative battery cable.
2. Remove the battery and battery tray.
3. Remove the aircleaner component. (See F–10 INTAKE-AIR SYSTEM REMOVAL/INSTALLATION.)
4. Remove the front tires and splash shield.
5. Remove the under cover.
6. Remove the steering gear and power steering pipe. (See N–10 STEERING GEAR AND LINKAGE REMOVAL/INSTALLATION.)
7. Remove the front auto leveling sensor. (See T–32 FRONT AUTO LEVELING SENSOR REMOVAL/INSTALLATION.)
8. Drain the ATF. (See K–13 AUTOMATIC TRANSAXLE FLUID (ATF) REPLACEMENT.)

Warning
- **Improperly jacking a transaxle is dangerous. It can slip off the jack and may cause serious injury.**

Caution
- **To prevent the torque converter and transaxle from separating, remove the transaxle without tilting it toward the torque converter.**

9. Remove in the order shown in the figure.
10. Install in the reverse order of removal.
11. Adjust the headlight zeroset. (See T–31 HEADLIGHT ZEROSET.)
12. Add ATF to the specified level. (See K–13 AUTOMATIC TRANSAXLE FLUID (ATF) REPLACEMENT.)
13. Carry out the mechanical system test. (See K–6 MECHANICAL SYSTEM TEST.)

Service item	Test item		
	Line pressure test	Stall test	Time lag test
ATX replacement	×		
ATX overhaul	×	×	×
Torque converter replacement	×	×	
Oil pump replacement	×		
Clutch system replacement	×		×

× : Test to be performed after the service work

14. Carry out the road test. (See K–9 ROAD TEST.)

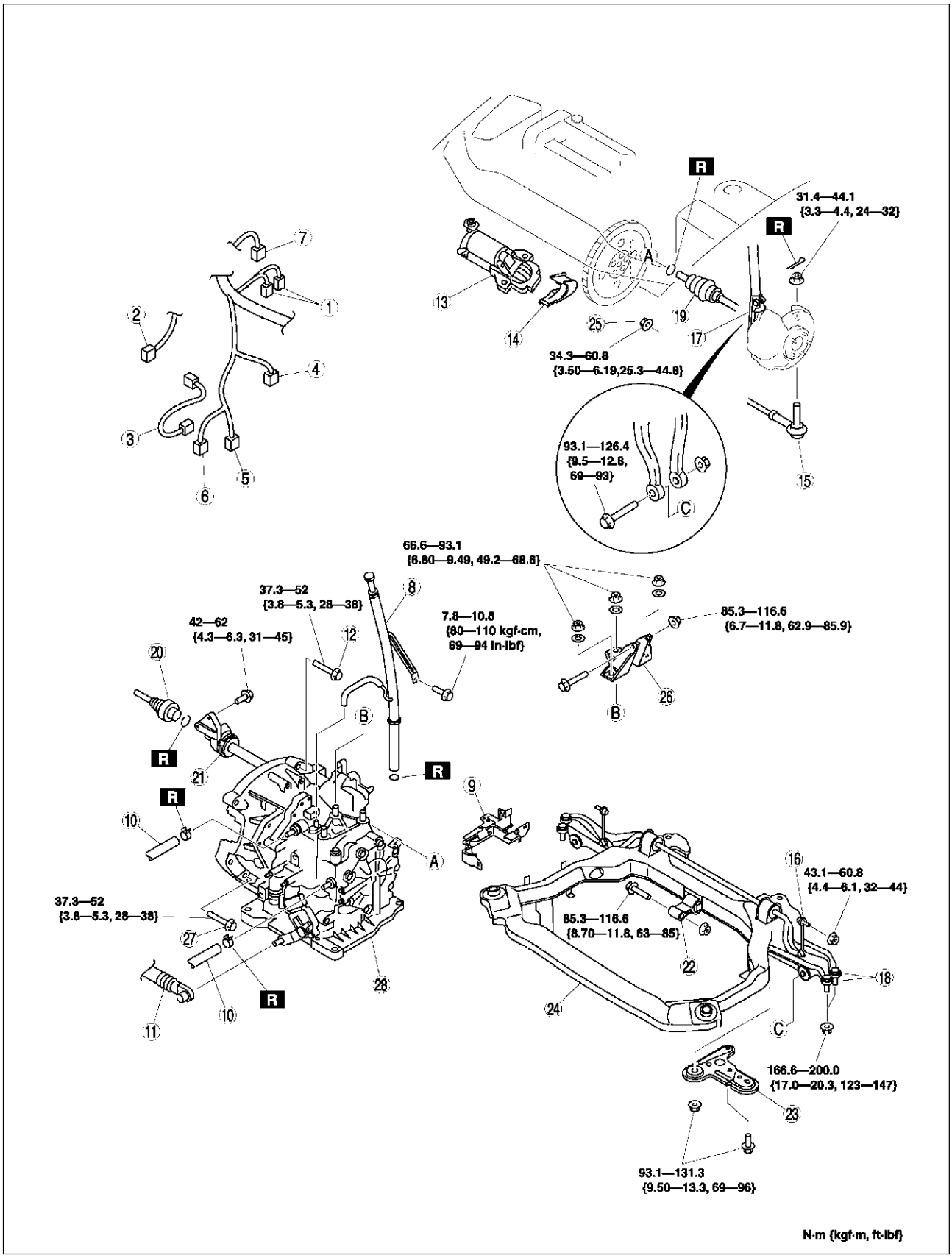

A6E5614W046

1	O_2 sensor connector
2	Oil pressure switch connector (for oil filter)

3	Oil pressure switch connector (for ATX)
4	Input/turbin speed sensor connector

5	TR switch connector
6	Transaxle connector
7	VSS connector
8	Oil dipstick and filler tube
9	Harness bracket
10	Oil hose
11	Selector cable
12	Transaxle mounting bolt (upper side)
13	Starter
14	Endplate cover
15	Tie-rod end ball joint (See N–11 Tie-rod End Ball Joint Removal Note)
16	Stabilizer control link
17	Damper fork
18	Lower arm (front, rear) ball joint (See R–19 Front Lower Arm (Rear) Ball Joint Removal Note) (See R–16 Front Lower Arm (Front) Ball Joint Removal Note)
19	Drive shaft (See M–17 DRIVE SHAFT REMOVAL/ INSTALLATION)
20	Drive shaft (See M–17 DRIVE SHAFT REMOVAL/ INSTALLATION)
21	Joint shaft (See M–12 JOINT SHAFT REMOVAL/ INSTALLATION)
22	No.1 engine mount (See K–31 No.1 Engine Mount Bracket Removal Note) (See K–33 No.1 Engine Mount and No.4 Engine Mount Bracket Installation Note)
23	Crossmember bracket
24	Crossmember (See R–23 FRONT CROSSMEMBER REMOVAL/INSTALLATION.)
25	Torque converter installation nuts (See K–32 Torque Converter Nuts Removal Note)(SeeK–33 Torque Converter Nuts Installation Note)
26	No.4 engine mount (See K–33 No.1 Engine Mount and No.4 Engine Mount Bracket Installation Note)
27	Transaxle mounting bolt (lower side)
28	Transaxle (See K–31 Transaxle Removal Note)(K–32 Transaxle Installation Note)

K

No.1 Engine Mount Bracket Removal Note

1. Support the engine using the **SST** before removing the No.1 engine mount.
2. Remove the No.1 engine mount.

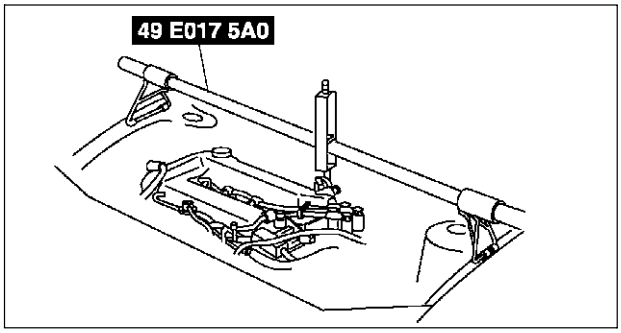

A6E5614W049

Transaxle Removal Note

1. Loosen the part marked A and lean the engine toward the transaxle.
2. Support the transaxle on a jack.
3. Remove the transaxle mounting bolts.

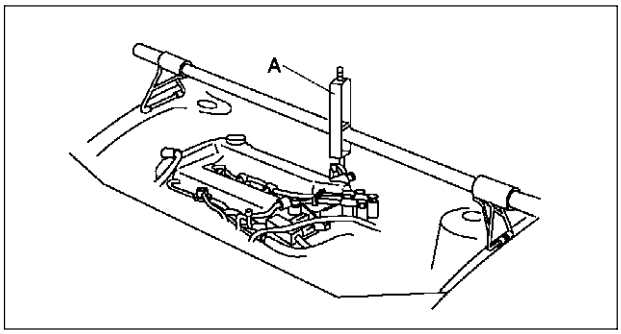

A6E5614W050

4. Remove the transaxle.

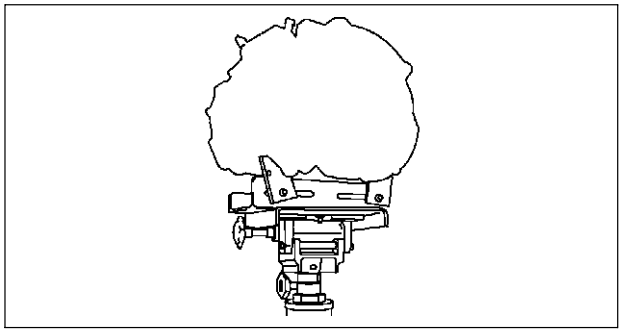

A6E5614W051

Transaxle Installation Note

1. Set the transaxle on a jack and lift it.
2. Install the transaxle mounting bolts.

Tightening torque
37.3—52 N·m {3.8—5.3 kgf·m, 28—38 ft·lbf}

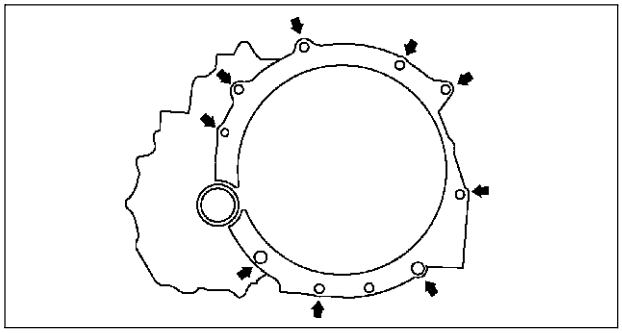

A6E5614W052

Torque Converter Nuts Removal Note

1. Hold the cankshaft pulley to prevent drive plate from rotating.

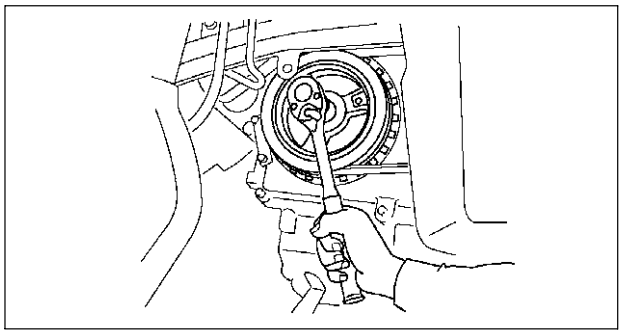

A6E5614W091

2. Remove the torque converter nuts from the starter installation hole.

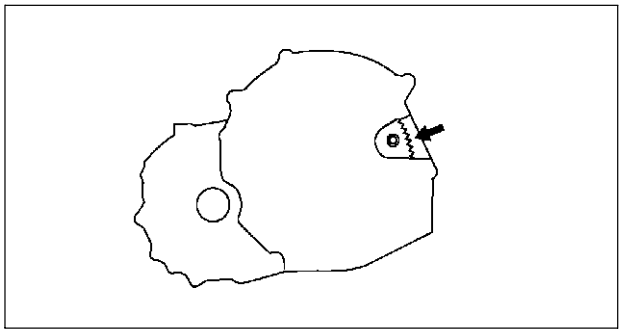

A6E5614W092

Torque Converter Nuts Installation Note

1. Hold the cankshaft pulley to prevent drive plate from rotating.

Caution

- **Loosely and equally tighten the torque converter nuts, then further tighten them to the specified tightening torque.**

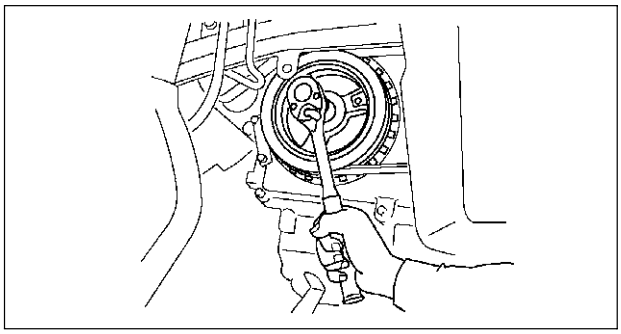

A6E5614W091

2. Tighten the torque converter mounting nuts.

Tightening torque
34.3—60.8 N·m {3.5—6.2 kgf·m, 25—45 ft·lbf}

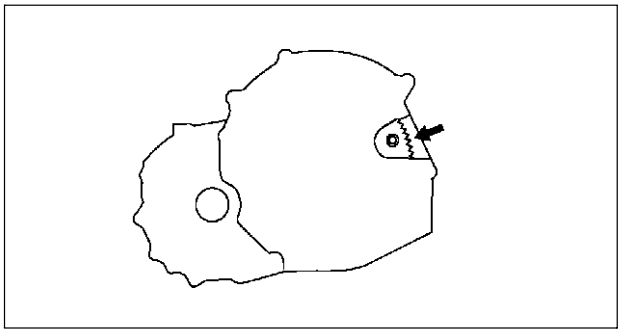

A6E5614W092

No.1 Engine Mount and No.4 Engine Mount Bracket Installation Note

1. Verify that the engine mount rubbers are installed as shown.
2. By aligning the holes with the stud bolts, install the No.4 engine mount bracket to the transaxle.
3. By aligning the holes with the stud bolts, install the No.1 engine mount to the transaxle.
4. Align the hole of the No.4 engine mount bracket with the No.4 engine mount rubber on vehicle, and temporarily tighten the bolt D.
5. Tighten the nut B,C in order of B→C, then bolt A.
6. Tighten the bolt D.

Tightening torque
A, B, C: 66.6—93.1 N·m {6.8—9.4 kgf·m, 50—68 ft·lbf}
D: 85.3—116.6 N·m {8.7—11.8 kgf·m, 63—85 ft·lbf}

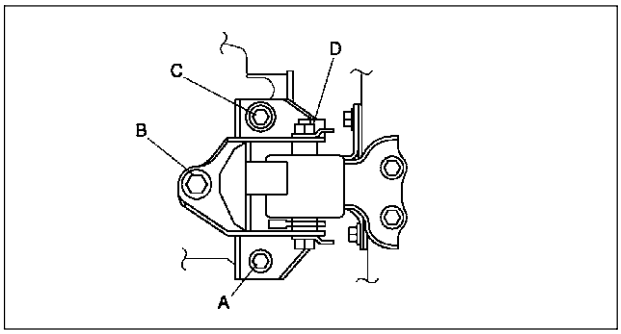

A6E5112W005

8. Tighten the bolt D to the No.1 engine mount.

Tightening torque
E: 85.3—116.6 N·m {8.7—11.8 kgf·m, 63—85 ft·lbf}

9. Remove the **SST** (49 E017 5A0).

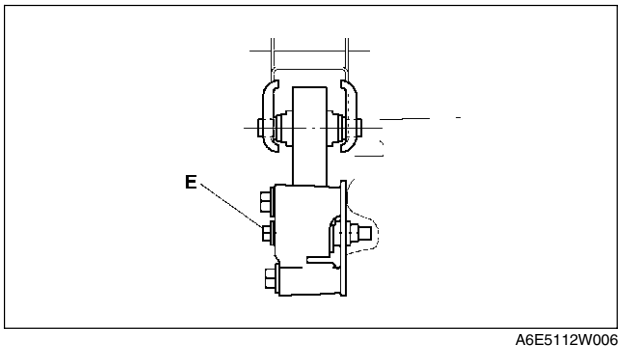

A6E5112W006

OIL SEAL REPLACEMENT

A6E561401032W01

1. Drain the ATF. (See K–13 AUTOMATIC TRANSAXLE FLUID (ATF) REPLACEMENT.)

Caution

- **The oil seal is easily damaged by the sharp edges of the drive shaft splines. Do not let the splines contact the oil seal.**

2. Remove the drive shaft. (See M–17 DRIVE SHAFT REMOVAL/INSTALLATION.)
3. Remove the oil seal.
4. Using the **SST** and a hammer, tap a new oil seal in evenly until the **SST** contacts the transaxle case.
5. Coat the lip of the oil seal with transaxle oil.
6. Install the drive shaft. (See M–17 DRIVE SHAFT REMOVAL/INSTALLATION.)
7. Add ATF to the specified level. (See K–13 AUTOMATIC TRANSAXLE FLUID (ATF) REPLACEMENT.)
8. Carry out the mechanical system test. (See K–6 MECHANICAL SYSTEM TEST.)

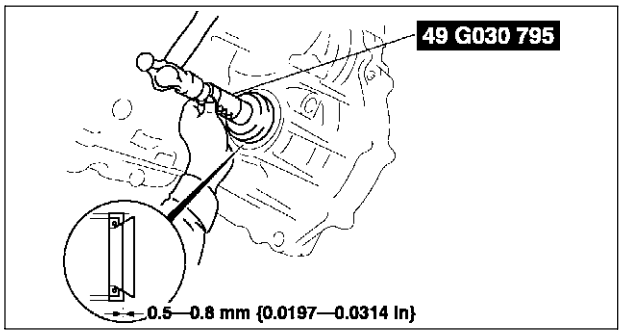

A6E5614W056

CONTROL VALVE BODY REMOVAL

A6E561421100W01

On-Vehicle Removal

Warning

- **Using compressed air can cause dirt and other particles to fly out, causing injury to the eyes. Wear protective eyes whenever using compressed air.**

Caution

- **Clean the transaxle exterior throughout with a steam cleaner or cleaning solvents before removal.**
- **If any old sealant gets into the transaxle during installation of the oil pan, trouble may occur in the transaxle case and oil pan. Clean with cleaning fluids.**

1. Disconnect the negative battery cable.
2. Drain the ATF into a separate suitable container. (See K–13 AUTOMATIC TRANSAXLE FLUID (ATF) REPLACEMENT.)
3. Remove the under cover.
4. Remove the front tires and splash shield.
5. Remove the crossmember. (See R–23 FRONT CROSSMEMBER REMOVAL/INSTALLATION.)
6. Remove the oil pan.
7. Disconnect the transaxle connectors and transaxle fluid temperature (TFT) sensor connector.
8. Remove the oil strainer.

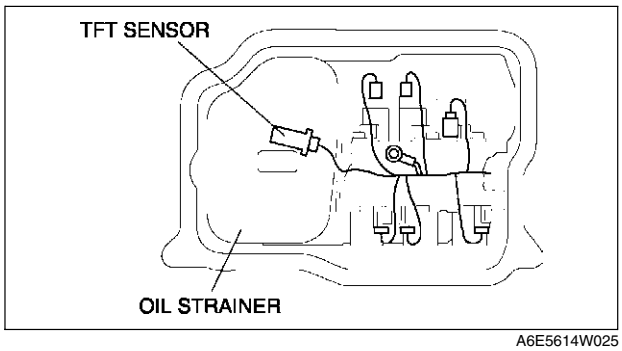

A6E5614W025

9. Remove the control valve body installation bolts A as shown, then remove the control valve body component as shown.

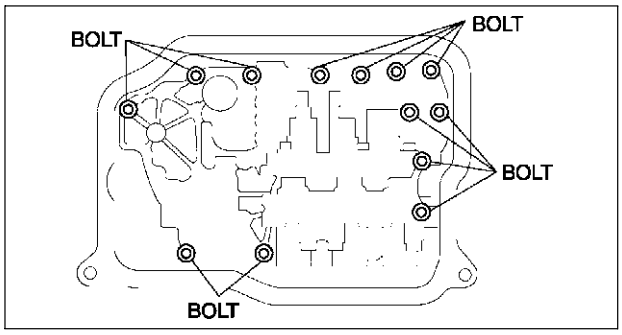

A6E5614W058

10. Remove the accumulators and accumulator springs.

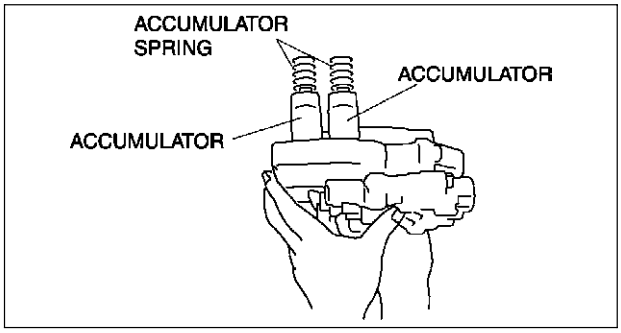

A6E5614W059

CONTROL VALVE BODY INSTALLATION

A6E561421100W02

On-Vehicle Installation

Caution
- **Be sure to align the parking rod and the manual valve.**

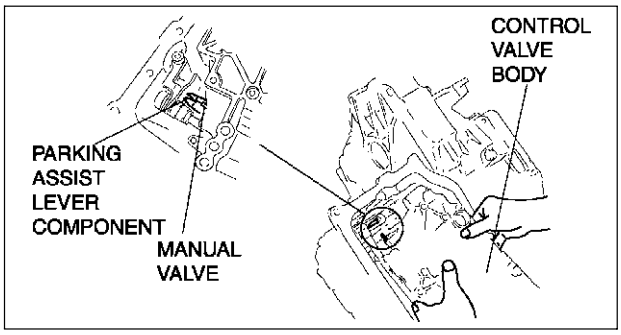

A6E5614W060

1. Install the accumulator springs and accumulators into the transaxle case.

Spring	Outer diameter (mm {in})	Free Length (mm {in})	No. of coils	Wire diameter (mm {in})
Servo apply accumulator large spring	21.0 {0.827}	67.8 {2.669}	10.3	3.5 {0.138}
Servo apply accumulator small spring	13.0 {0.512}	67.8 {2.669}	17.1	2.2 {0.087}
Forward accumulator small spring	21.0 {0.827}	75.0 {2.953}	10.7	2.3 {0.091}
Forward accumulator large spring	15.6 {0.614}	49.0 {1.929}	7.7	2.4 {0.094}

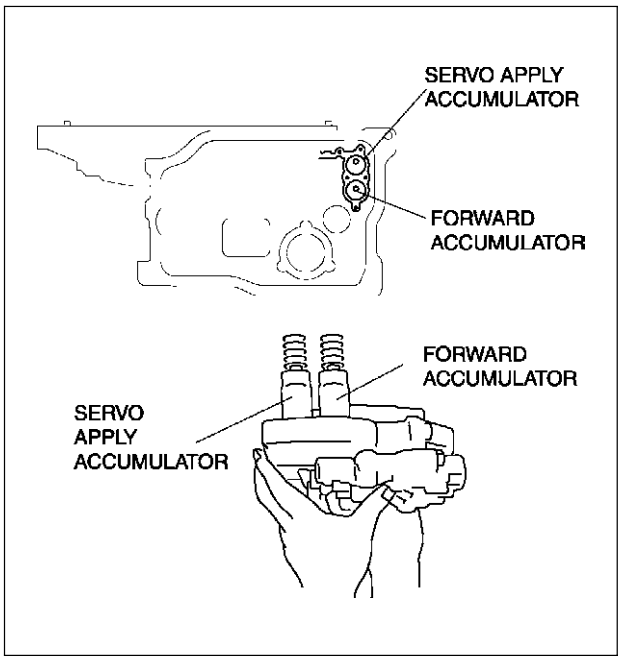

A6E5614W061

2. Install the control valve body component.

Tightening torque
7.8—10.8 N·m
{80—110 kgf·cm, 70—95 in·lbf}

Bolt length (measured from below the head)
B: 40 mm {1.575 in}
No mark: 70 mm {2.756 in}

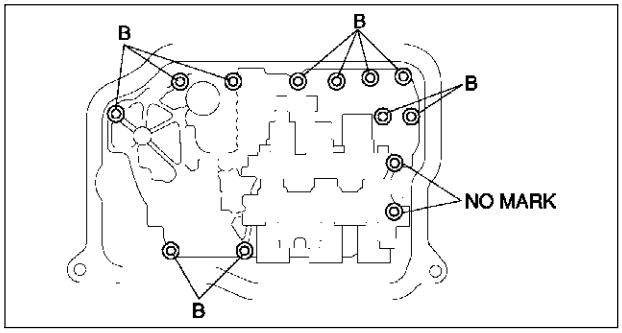

A6E5614W062

3. Install the oil strainer.
4. Match the harness colors, then connect the solenoid connector and TFT sensor connector.

Spring	Color of connector (harness side)
Pressure control solenoid	Black
Shift solenoid A	White
Shift solenoid B	Blue
Shift solenoid C	Green
Shift solenoid D	white
Shift solenoid E	Black

5. Install the ground.

Tightening torque
7.8—10.8 N·m {80—110 kgf·cm, 70—95 in·lbf}

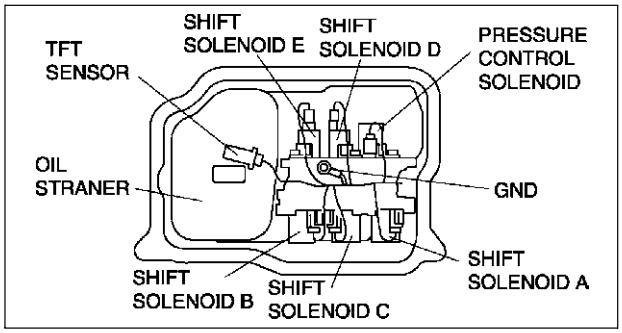

A6E5614W063

6. Apply a light coat of silicon sealant to the contact surfaces of the oil pan and transaxle case.
7. Install the oil pan.

Tightening torque
6—8 N·m {62—81 kgf·cm, 53—70 in·lbf}

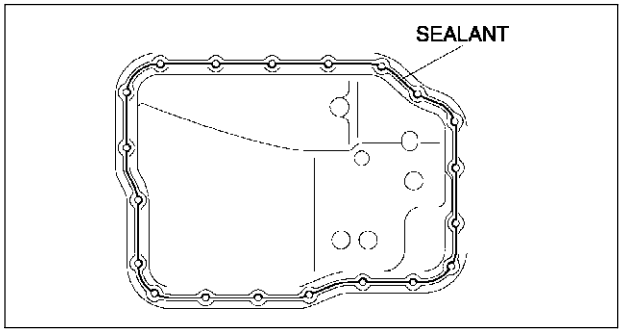

A6E5614W064

8. Install the crossmember. (See R–23 FRONT CROSSMEMBER REMOVAL/INSTALLATION.)
9. Install the front tires and splash shield.
10. Install the under cover.
11. Connect the negative battery cable.
12. Add ATF and with the engine idling, inspect the ATF level. (See K–13 AUTOMATIC TRANSAXLE FLUID (ATF) REPLACEMENT.)
13. Carry out the mechanical system test. (See K–6 MECHANICAL SYSTEM TEST.)
14. Carry out the road test. (See K–9 ROAD TEST.)

OIL COOLER FLUSHING

A6E561419900W01

Note
- The contaminated cooler line (oil pipes and hoses) and auxiliary cooler must be flushed completely when ATX is overhauled or replaced.

1. Remove the two oil cooler line hoses and apply air pressure of **196 kPa {2.0 kgf/cm^2, 28 psi}** from the return hose (pipe) side.

Caution

- **Power flushing should be performed very carefully when removing the accumulated debris from the fluid baffle, otherwise the debris cannot be removed or the problem becomes even worse.**

2. If there is no air blown out the feed side, flush the oil cooler lines using the power-flushing tool. (See K–38 Power Flushing)

Recommended power-flushing manufacturer

Manufacturer	Part number	Description
Kent Moore	J35944-AMAZ	Flushing kit or equivalent
OTC	60081	Portable torque converter, oil cooler cleaner or equivalent

3. If there is ventilation, carry out the following steps.

(1) Remove the oil pan and inspect the fluid filter element from the front filter.
(2) If the element is covered with too much debris or particles and cannot be seen, replace the oil cooler. (See K–39 OIL COOLER REMOVAL/INSTALLATION.) (See K–41 OIL COOLER DISASSEMBLY/ASSEMBLY.)
(3) If the element can be seen, flush the oil cooler lines using the power-flushing tool.
- Performing back and reverse power flushing two times each does not work because debris or particles flow out from the feed pipe side of ATX.

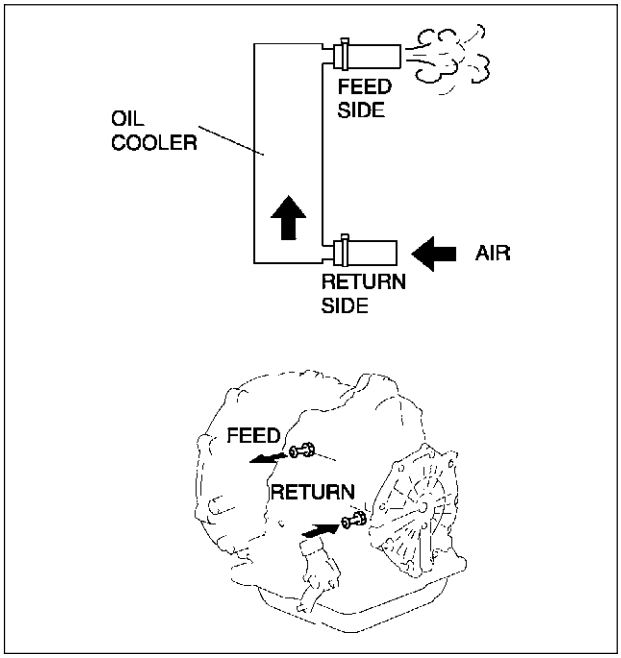

A6E5614W065

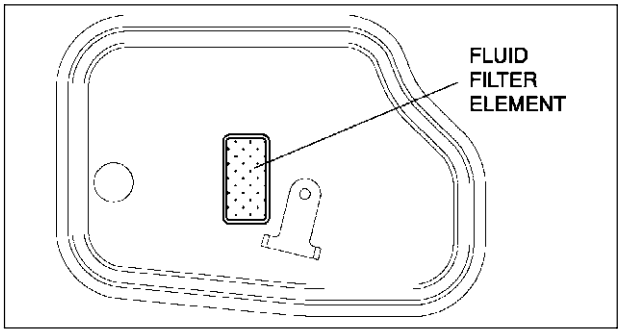

A6E5614W066

K

Power Flushing
Repair procedure

1. Before power flushing, inspect the hoses/lines and clamps. Power flushing must begin with back flushing followed by forward flushing to quickly dislodge the restriction. If back flushing is not performed before forward flushing, the restriction could further reduce the ATF flow through the internal mesh type baffle of the cooler and flushing will not be effective or possible.

Inspecting oil lines and clamps

1. Be sure to inspect the lines (hoses/pipes) for cuts, crimps (pinched), cracks or any other damage before reusing them.
   - If any problems exist, replace lines and clamps.

Caution
- **Always use new clamps when replacing hoses.**

Back flushing

1. Using the power flushing equipment manufacturer's instructions, connect equipment so the flushing fluid flows in the opposite direction of normal fluid flow.
2. Flush oil cooler/lines until discharge fluid is clean.

Caution
- **If the cooler can not be properly flushed using recommended equipment, send the radiator out for sublet cleaning or replace.**

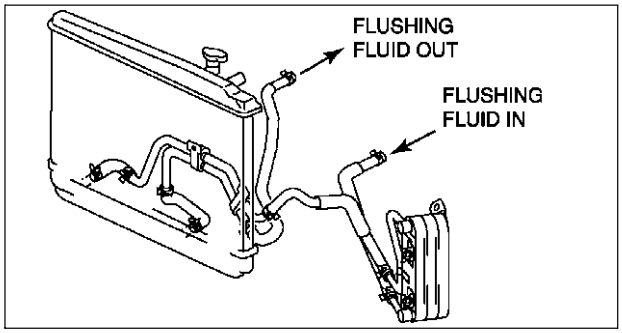

A6E5614W067

Forward flushing

1. Connect power flushing equipment so the flushing fluid flows in the direction of normal fluid flow.
2. Flush oil cooler/lines until discharge fluid is clean.

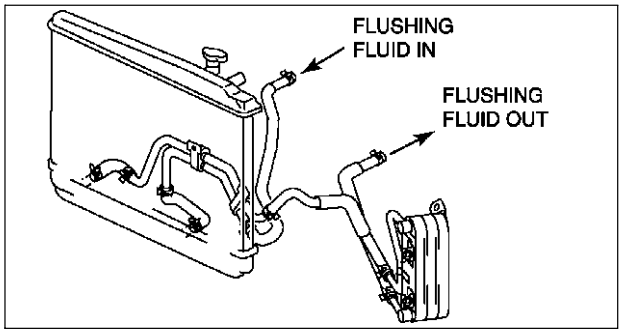

A6E5614W068

OIL COOLER REMOVAL/INSTALLATION

A6E561419900W02

1. Disconnect the negative battery cable.
2. Drain the ATF into a container. (See K–13 AUTOMATIC TRANSAXLE FLUID (ATF) REPLACEMENT.)
3. Remove the radiator. (See E–6 RADIATOR REMOVAL/INSTALLATION.)
4. Remove in the order indicated in the table.
5. Install in the reverse order of removal.
6. Add ATF to the specified level. (See K–13 AUTOMATIC TRANSAXLE FLUID (ATF) REPLACEMENT.)
7. Connect the negative battery cable.
8. Inspect for oil leakage from the oil pipes and oil hoses.
9. Inspect for coolant from the hoses.
10. Inspect the ATF level and condition. (See K–12 AUTOMATIC TRANSAXLE FLUID (ATF) INSPECTION.)
11. Carry out the line pressure test. (See K–6 MECHANICAL SYSTEM TEST.)
12. Carry out the road test. (See K–9 ROAD TEST.)

WITH OIL COOLER

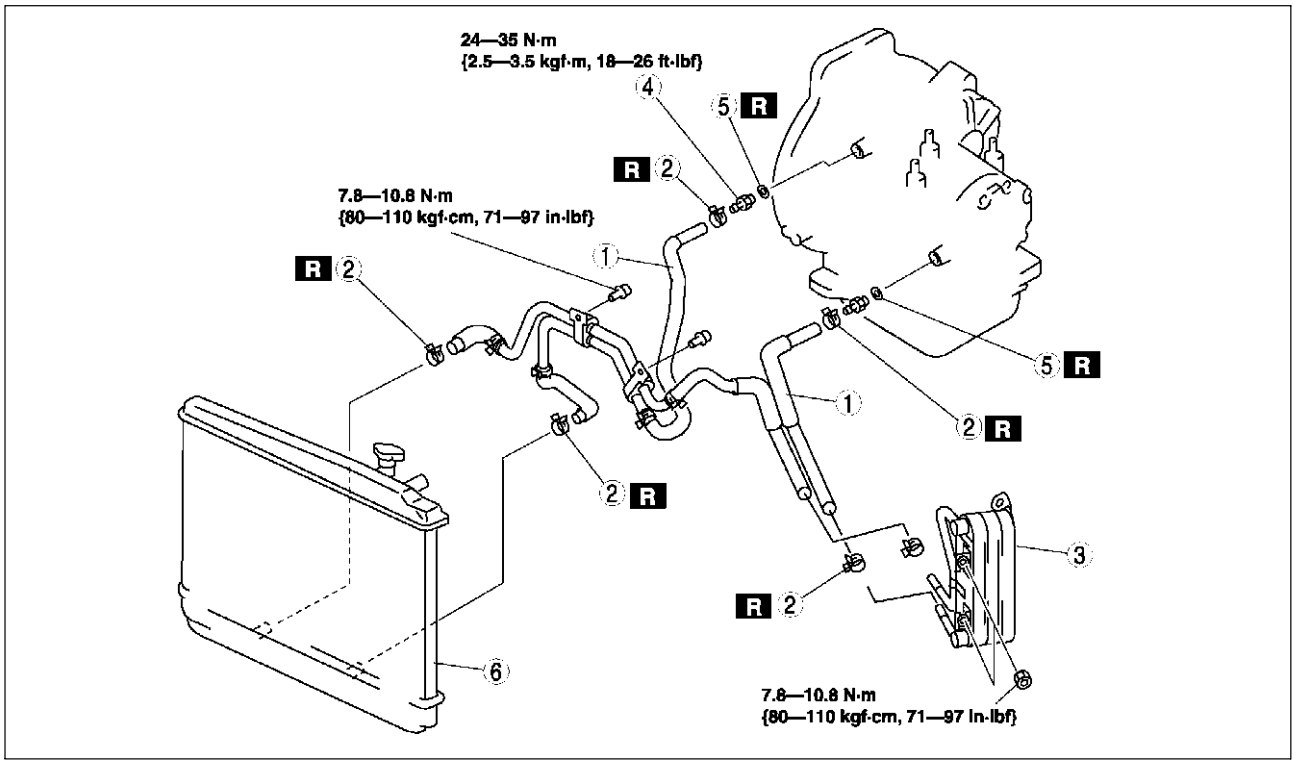

A6E5614W069

1	Oil hose (See K–40 Oil Pipe, Hose Clamp, Oil Hose Installation Note.)
2	Hose clamp (See K–40 Oil Pipe, Hose Clamp, Oil Hose Installation Note.)

3	Oil cooler
4	Connector bolt
5	O-ring
6	Radiator (in tank oil cooler) (See K–40 Radiator (In Tank Oil Cooler) Installation Note.)

WITHOUT OIL COOLER

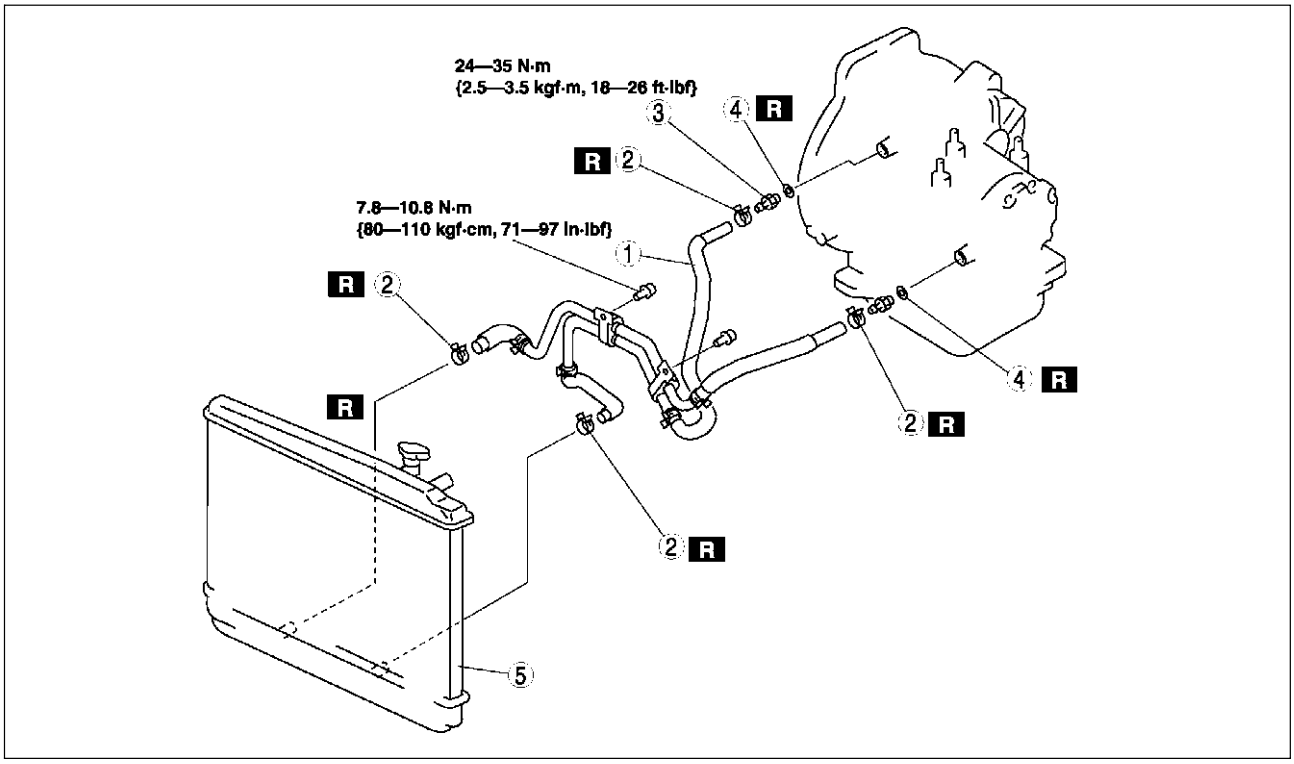

A6E5614W080

1	Oil hose (See K–40 Oil Pipe, Hose Clamp, Oil Hose Installation Note.)
2	Hose clamp (See K–40 Oil Pipe, Hose Clamp, Oil Hose Installation Note.)
3	Connector bolt
4	O-ring
5	Radiator (in tank oil cooler) (See K–40 Radiator (In Tank Oil Cooler) Installation Note.)

Radiator (In Tank Oil Cooler) Installation Note

1. The automatic transaxle oil cooler flushing must be performed whenever a transaxle is removed for service because the existing fluid may be contaminated, and to prevent contamination of new fluid.

   Note
   - The flushing must be performed after installation of the overhauled or replacing transaxle.

2. Follow the instructions in the manufacturer's publication for flushing operation.

Oil Pipe, Hose Clamp, Oil Hose Installation Note

1. Apply compressed air to cooler-side opening, and blow any remaining grime and foreign material from the cooler pipes. Compressed air should be applied for no **less than one minute**.

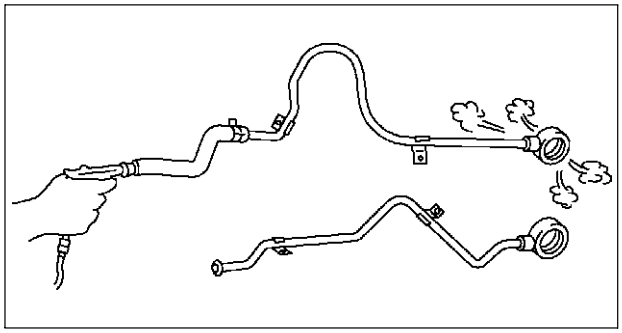

A6E5614W070

2. Align the marks, and slide the oil hose onto the oil pipe until it is fully seated as shown.

Note
- If reusing the hose, install the new hose clamp exactly on the mark left by the previous hose camp.Then apply force to the hose clamp in the direction of the arrow in order to fit the clamp in the place.

3. Install the new hose clamp onto the hose.
4. Verify that the hose clamp does not interfere with any other components.

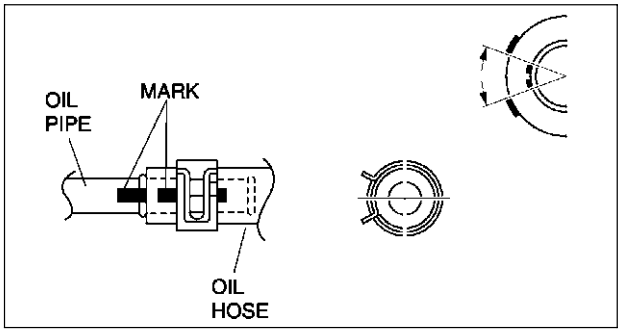

A6E5614W071

OIL COOLER DISASSEMBLY/ASSEMBLY

A6E561419900W03

1. Disassemble in the order indicated in the table.
2. Assemble in the reverse order of disassembly.

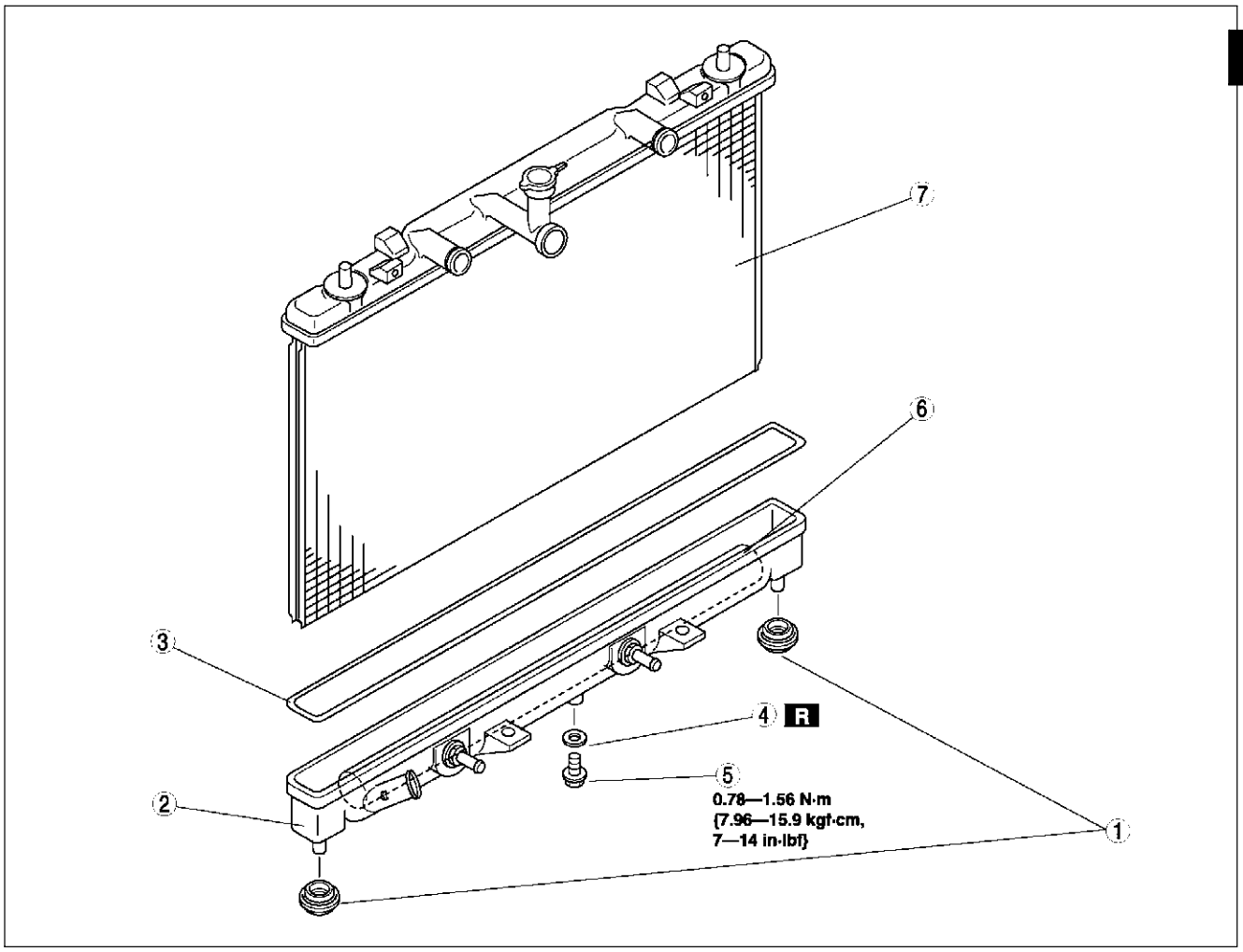

A6E5614W072

1	Mount rubber
2	Radiator outer tank (in tank oil cooler) (See K–42 Radiator Outer Tank (In Tank Oil Cooler) Removal Note.) (See K–42 Radiator Outer Tank (In Tank Oil Cooler) Installation Note.)
3	O-ring
4	Washer

5	Drain plug
6	ATF cooler
7	Radiator

Radiator Outer Tank (In Tank Oil Cooler) Removal Note

1. Inspect the height of the header tabs.
2. Insert the end of a medium tip screwdriver between the end of the header tab and the outer tank.

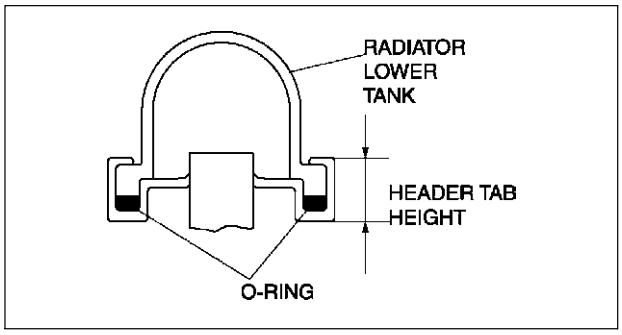

A6E5614W073

Note
- Do not open more tabs than necessary for tank removal.

3. Pivot the screwdriver to pry the tab away from the tank and repeat the procedure for each tab.
4. Remove the radiator outer tank and O-ring (gasket) from the core header when all of the tabs are opened.

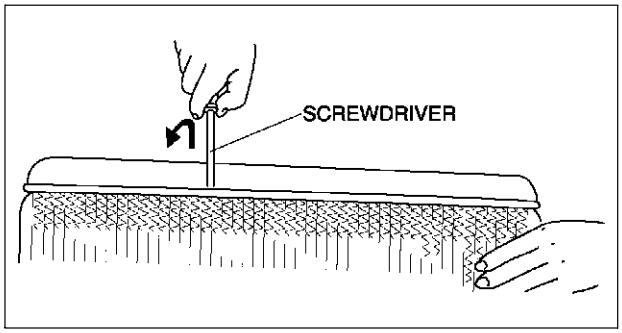

A6E5614W074

Note
- If any header tabs are missing from the core, replace the radiator.

5. Inspect the gasket surface of the radiator core header to ensure it is clean and free of foreign material or damage.
6. Inspect the radiator outer tank for warping. If it is warped, replace radiator tank.

Radiator Outer Tank (In Tank Oil Cooler) Installation Note

1. Install a new O-ring and ensure it is not twisted.

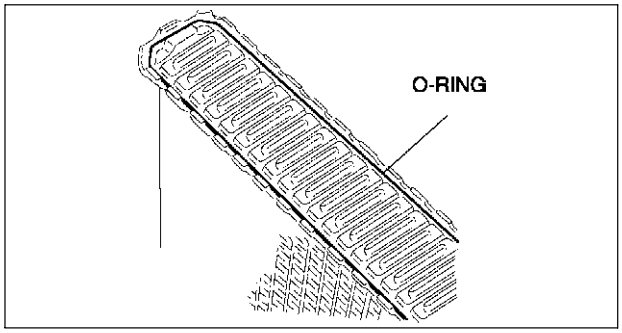

A6E5614W075

Note
- The old O-ring must be replaced.

2. Position the radiator tank in the original direction to the core using care not to scratch the tank sealing surface with the header tabs.

Note
- Step 3 will set jaw opening to the correct specification.

3. With the jaws of locking-type pliers (vise grips) closed and locked, turn the adjusting screw to position the jaws against the drill bit with the diameter measured (height) in removal procedure 1. Tighten the lock nut on the adjusting screw against the handle to lock the adjustment in place.

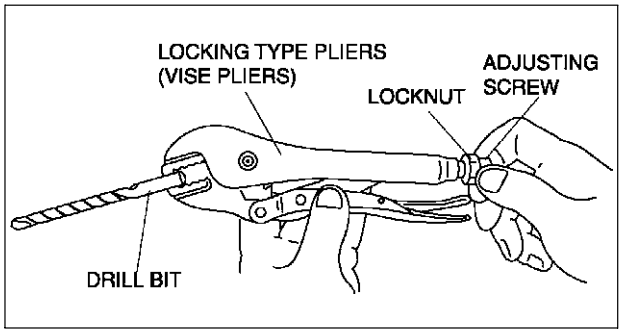

A6E5614W093

4. Squeeze the header tabs down in order as shown against the lip of radiator outer tank base with locking-type pliers while rotating the pliers toward the tank.

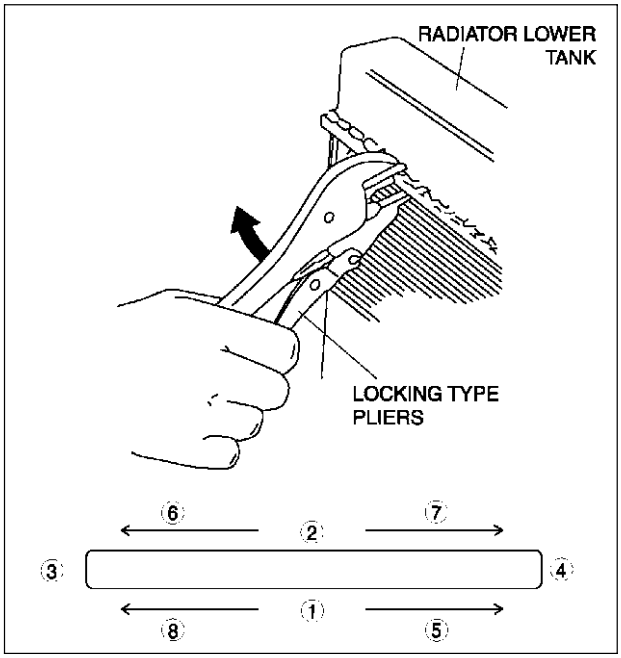

A6E5614W076

5. Verify the height of the header tabs is same as the height before removal.
6. Inspect for leakage from radiator. (See E–4 ENGINE COOLANT LEAKAGE INSPECTION.)

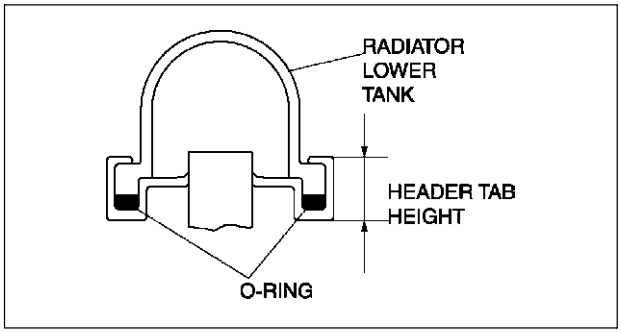

A6E5614W073

DRIVE PLATE REMOVAL/INSTALLATION

A6E561419020W01

1. Remove the transaxle.(See K–29 AUTOMATIC TRANSAXLE REMOVAL/INSTALLATION.)
2. Remove in the order indicated in the figure.
3. Install in the reverse order of removal.

1	Drive plate mounting bolts (See K–44 Drive Plate Mounting Bolts Removal Note.)
2	Adapter
3	Drive plate (See K–44 Drive Plate Installation Note.)

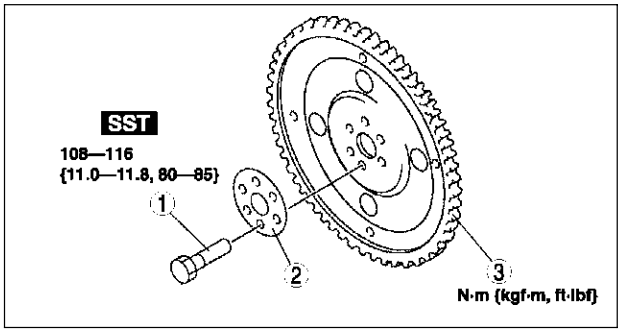

A6E5614W078

Drive Plate Mounting Bolts Removal Note

1. Set the **SST** or equivalent against the drive plate.
2. Remove the bolts and the drive plate.

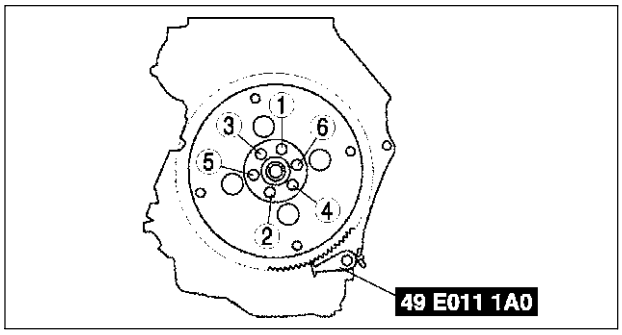

A6E5614W079

Drive Plate Installation Note

Caution

- **If the bolts are reused, remove the oil sealant from the bolt threads. Tightening a bolt that has old sealant on it can cause thread damage.**

1. Remove the sealant from the bolts hole in the crankshaft and from the drive plate mounting bolts.

Note

- If all the previous sealant cannot be removed from a bolt, replace the bolts.
- Do not apply sealant if a new bolts is used.

2. Install the drive plate.
3. Install the adapter.
4. Apply sealant to the drive plate mounting bolts and install them.
5. Set the **SST** or equivalent against the drive plate.

Caution

- **When installing sealant covered bolts, tighten them immediately. Leaving these bolts in a half installed condition could cause them to be stuck that way, due to the natural hardening or the sealant.**

6. Tighten the drive plate mounting bolts in two or three steps in the order shown.

Tightening torque
108—1116 N·m {11.0—11.8 kgf·m, 80—85 ft·lbf}

7. Install the transaxle. (See K–29 AUTOMATIC TRANSAXLE REMOVAL/INSTALLATION.)

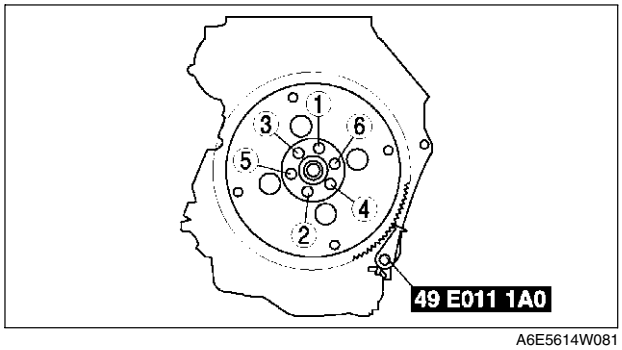

A6E5614W081

AUTOMATIC TRANSAXLE SHIFT MECHANISM

SHIFT-LOCK INSPECTION

A6E561630000W01

1. Turn the ignition switch to ON position.
2. Verify that the selector lever is in P position.
3. Depress the brake pedal and verify that the selector lever can be shifted from P position.
   - If a malfunction is found, inspect the interlock cable. (See K–45 INTERLOCK CABLE INSPECTION.)

KEY INTERLOCK INSPECTION

A6E561609000W01

1. Verify that the ignition key cannot be pulled out except in P position.
   - If a malfunction is found, inspect the interlock cable. (See K–45 INTERLOCK CABLE INSPECTION.)

INTERLOCK CABLE INSPECTION

A6E561609000W02

1. Remove the interlock cable.
2. With the slider pin as shown in the figure, verify that the interlock cable moves freely.
   - If a malfunction is found, replace the interlock cable.

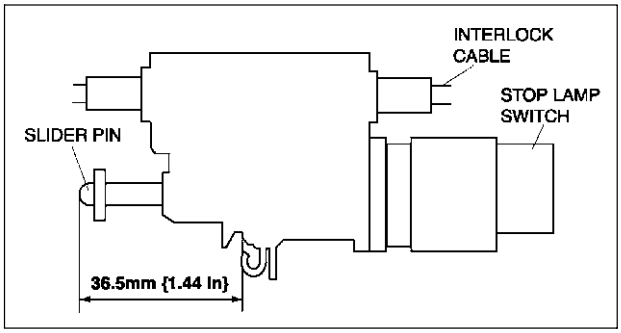

A6E5616W001

SELECTOR LEVER INSPECTION

A6E561646102W01

1. Turn the ignition switch to ON (engine OFF).
2. With the brake pedal depressed, verify that there is a "click" at each range when shifted.
3. Verify that the selector lever can be shifted.
4. Verify that there is a "click" at each position when shifted from P position to L range.
5. Verify that the positions of the selector lever and the indicator are aligned.
   - If not as specified, adjust the TR switch.(See K–18 TRANSAXLE RANGE (TR) SWITCH ADJUSTMENT.)
6. Verify that the vehicle operates in each selected range.

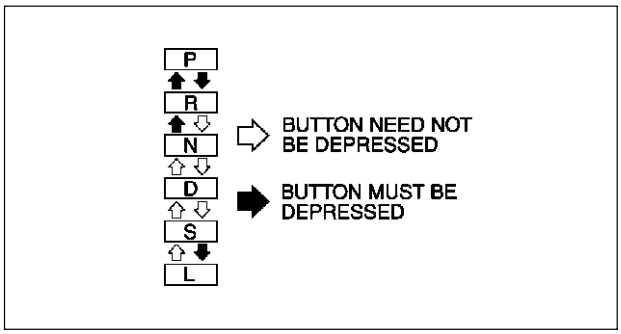

A6E5616W002

SELECTOR CABLE ADJUSTMENT

A6E561646102W02

1. Remove the center console.
2. Shift the selector lever to P position.
3. Unlock the lock piece of the selector cable (selector lever side) in the order shown in the figure.
4. Verify that the manual shaft is in P position.

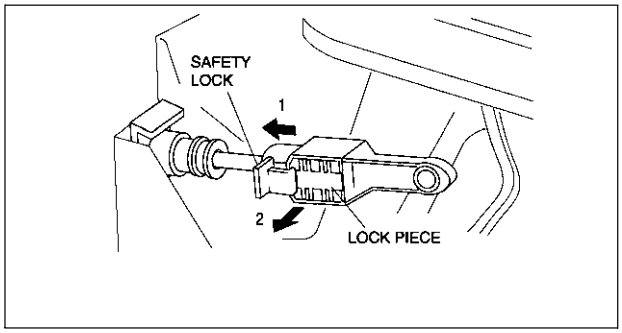

A6E5616W003

5. Lock the lock piece of the selector cable (selector lever side) in the order shown in the figure.
6. Install the center console.
7. Shift the selector lever from P position to L range, and make sure that there are no other components in that area to interfere with the lever.

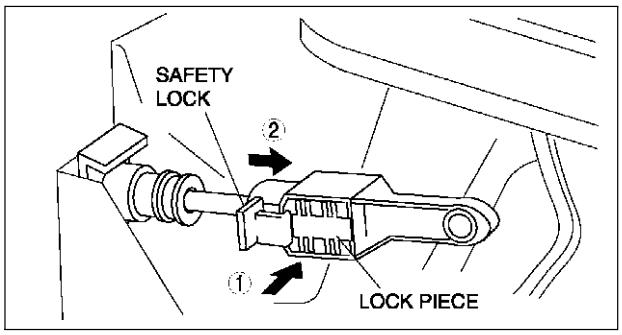

A6E5616W004

SELECTOR LEVER REMOVAL/INSTALLATION

A6E561646102W03

1. Disconnect the negative battery cable.
2. Remove battery and battery tray.
3. Remove the air cleaner compornent. (See F–10 INTAKE-AIR SYSTEM REMOVAL/INSTALLATION.)
4. Remove the console.
5. Remove the dashboard compleat. (See S–82 DASHBOARD REMOVAL/INSTALLATION.)
6. Remove the SAS control module. (See T–124 SAS UNIT REMOVAL/INSTALLATION.)
7. Remove the climate control unit. (See U–44 CLIMATE CONTROL UNIT REMOVAL.) (See U–45 CLIMATE CONTROL UNIT INSTALLATION.)
8. Remove the rear heat duct. (See U–23 REAR HEAT DUCT REMOVAL/INSTALLATION.)
9. Remove in the order shown in the figure.
10. Remove the battery, battery tray and battery bracket.

11. Install in the reverse order of removal.

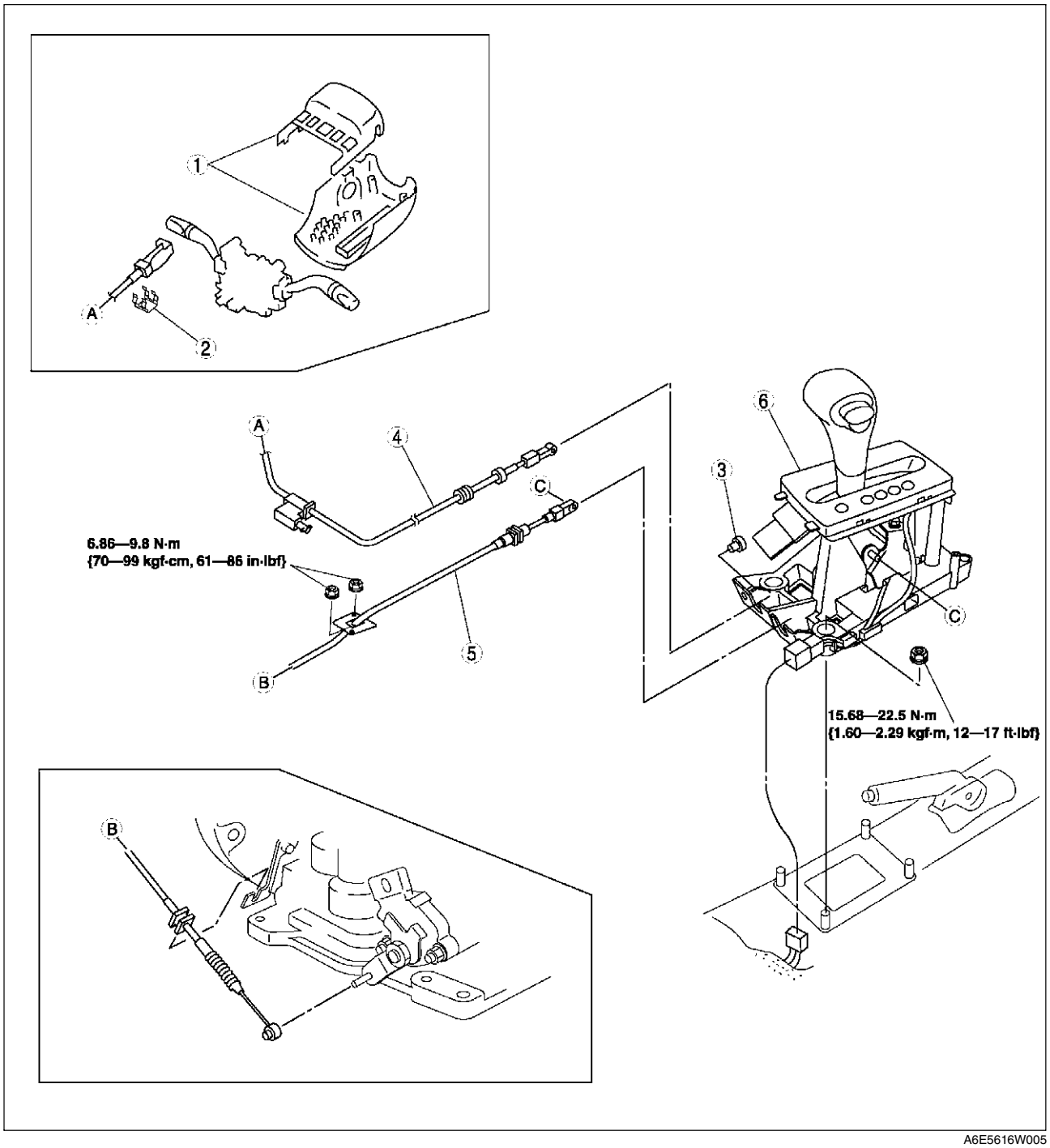

A6E5616W005

1	Column cover(with key interlock)
2	Clip(with key interlock)
3	Clip(with key interlock)
4	Interlock cable(with key interlock) (See K–49 Interlock Cable Installation Note.)

5	Selector cable (See K–48 Selector Cable Removal Note.) (See K–48 Selector Cable Installation Note.)
6	Selector lever

Selector Cable Removal Note

1. Remove the clip.
2. Remove the selector cable.

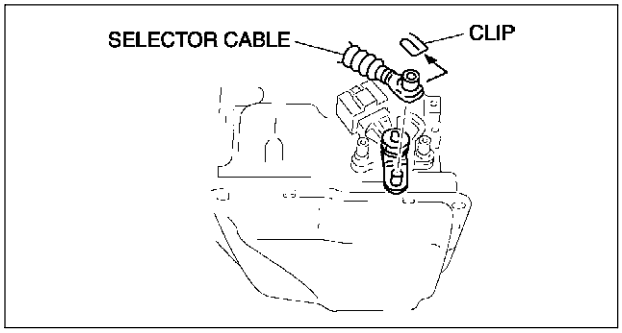

A6E5616W006

Selector Cable Installation Note

1. Install the selector cable to the selector lever certainly.
2. Install the selector cable to the bracket certainly.

Note

- Step 3, 4 is for the selector cable replacement only.

3. Verify that the selector lever is in P position.

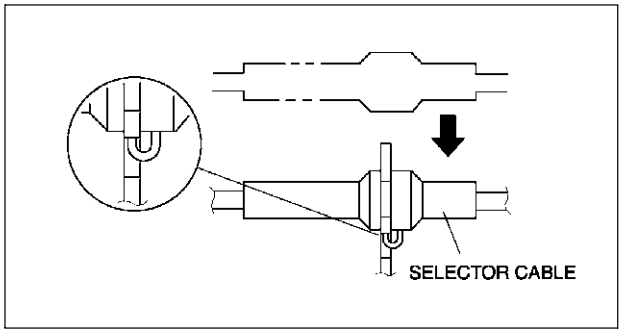

A6E5616W020

4. Lock the lock piece of the selector cable (selector lever side) in the order shown in the figure.

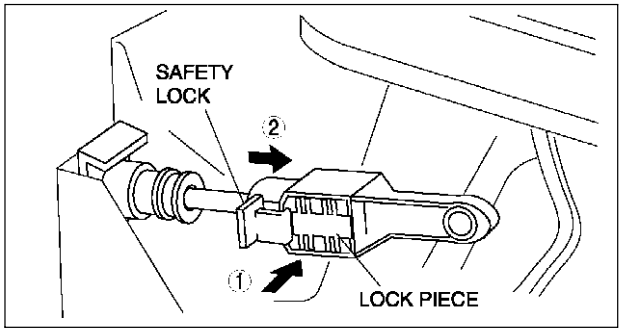

A6E5616W004

5. Verify that the manual shaft is in P position.

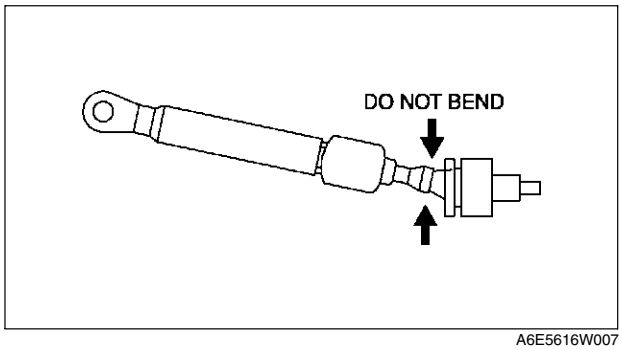

A6E5616W007

Caution
- **Bending the selector cable in the manner shown in the figure will damage the cable and it may become loose when shifted. When installing the selector cable, hold it straight.**

Note
- Install the selector lever to the manual shaft lever with the spring side of the selector cable end facing the front of the vehicle.

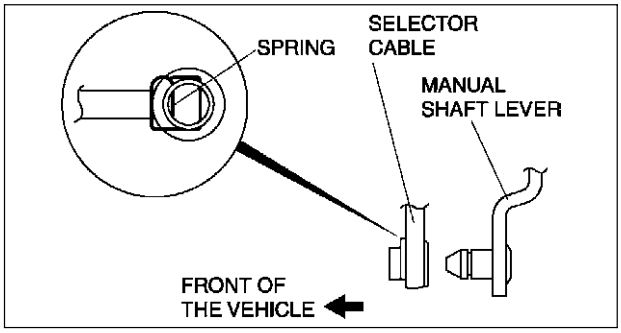

A6E5616W008

6. Install the selector lever to the manual shaft lever in such a way that the selector cable does not bear a load.
7. Confirm that the end of the manual shift lever sticks out of the end of the selector cable.
8. Install the selector cable to the selector cable securely bracket.

Interlock Cable Installation Note

1. Verify that the shift the selector lever in P position and ignition key is in LOCK position.
2. Press the lock unit onto the brake pedal stopper bracket.
3. From this position, slide the lock unit to fix the lock unit hook into the bracket hole securely as shown in the figure.

Caution
- **Allowing the interlock cable to be bent or twisted during installation can affect the lock unit operation.**

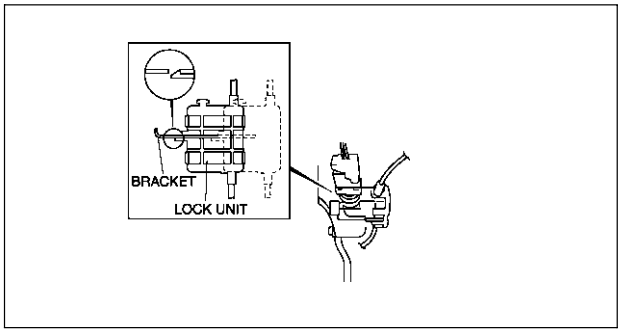

A6E5616W009

4. Install the interlock cable end onto the cam pin on the selector lever.

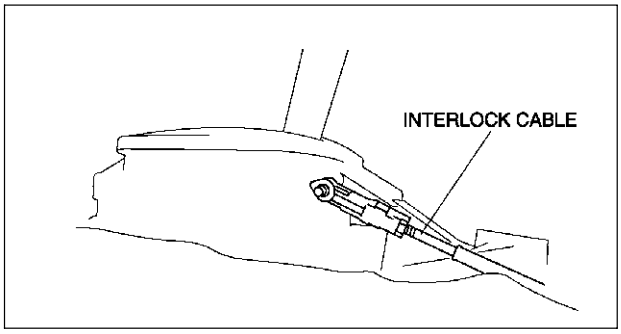

A6E5616W010

5. Fit the interlock cable in the U–groove in the selector lever base plate, and install the clip.

Caution
- **Applying a load to the interlock cable while pressing the lock piece in can affect the lock unit operation.**

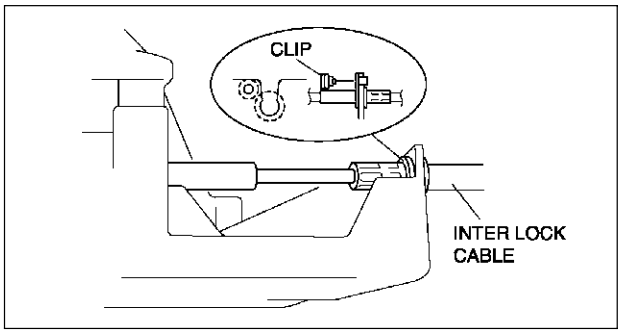

A6E5616W011

6. Press the interlock cable lock piece in unitl it is locked.

Note
- Step 7 is for the interlock cable replacement only.

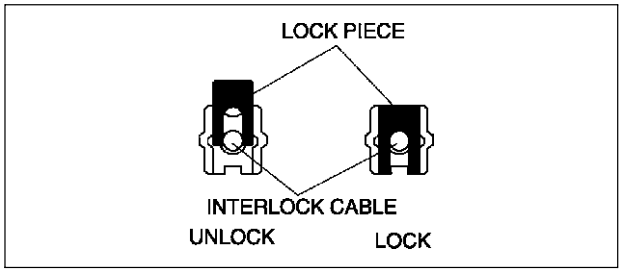

A6E5616W012

7. Remove the lock unit pin as shown in the figure.
8. Turn the ignition key in ACC position.
9. Install the interlock cable to the key cylinder.

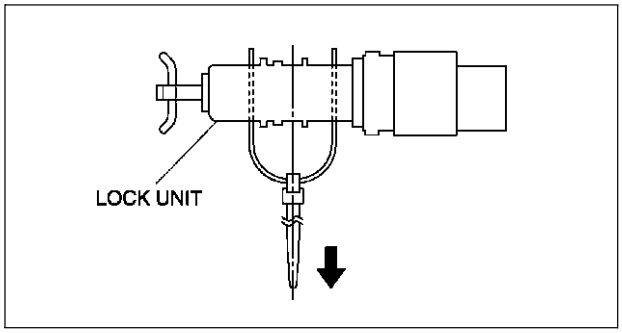

A6E5616W013

10. Slide the outer casing to the key cylinder, and insert the clip over the convex part of the outer casing.

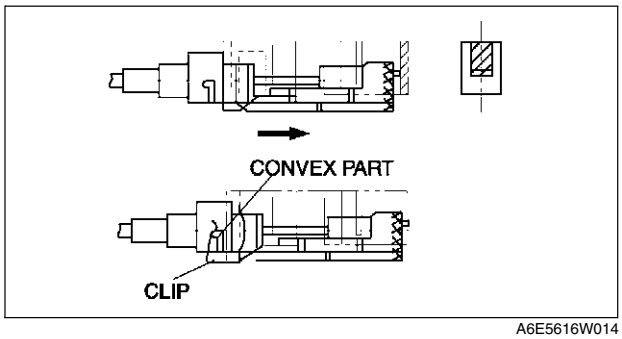

A6E5616W014

SELECTOR LEVER DISASSEMBLY/ASSEMBLY

A6E561646102W04

1. Disassemble in the order shown in the figure.
2. Assemble in the reverse order of disassembly.

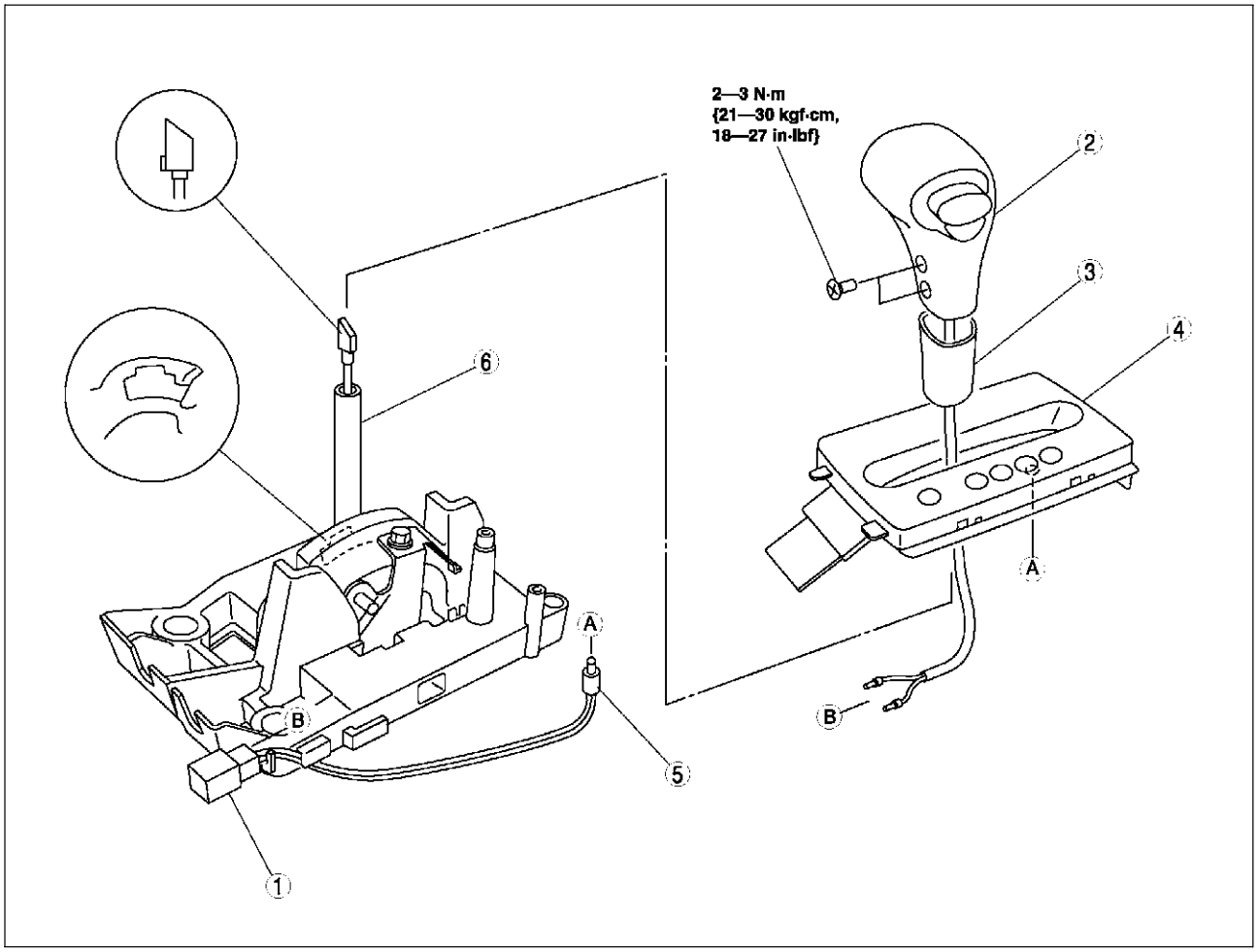

A6E5616W015

1	Connector (See K–51 Connector Disassembly Note.)
2	Selector lever knob component
3	Cover

4	Indicator panel
5	Selector illumination light
6	Selector lever

Connector Disassembly Note

1. Insert a thin piece of metal from the terminal side of the connector, and press down the terminal locking tab.
2. Pull the terminal out of the connector.

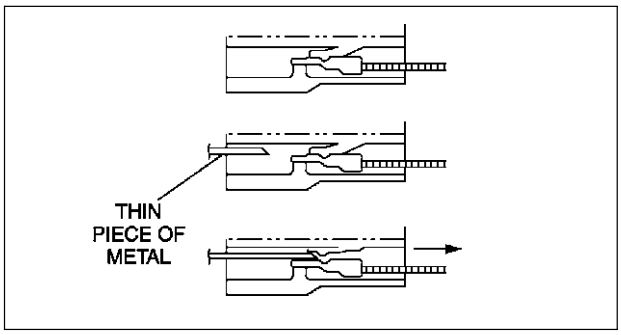

A6E5616W016

ON-BOARD DIAGNOSTIC

FOREWORD

A6E567001030W01

- When the customer reports a vehicle malfunction, check the malfunction indicator lamp (MIL), HOLD indicator light flashing, and PCM memory for diagnostic trouble code (DTC), then diagnose the malfunction according to following flowchart.
  — If the DTC exists, diagnose the applicable DTC. (See K–53 DTC TABLE.)
  — If the DTC does not exist, MIL does not illuminate, and HOLD indicator light flashes, diagnose the applicable symptom troubleshooting. (See K–113 SYMPTOM TROUBLESHOOTING ITEM TABLE.)

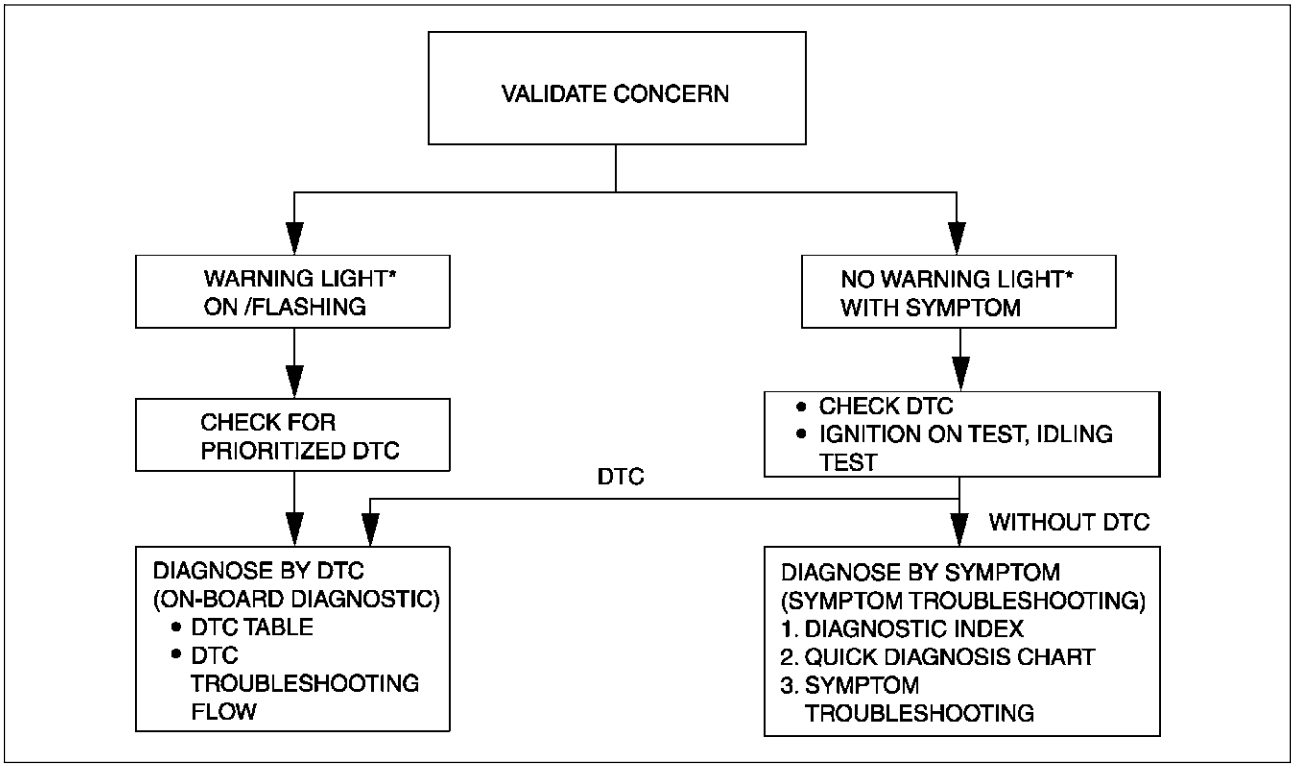

A6E5670W013

*:Malfunction indicator lamp (MIL), HOLD indicator light

AUTOMATIC TRANSAXLE ON-BOARD DIAGNOSTIC FUNCTION

A6E567001030W02

DTC Reading Procedure

(See F–62 ON-BOARD DIAGNOSTIC TEST.)

AFTER REPAIR PROCEDURE

A6E567001030W03

Caution

- **After repairing a malfunction, perform this procedure to verify that the malfunction has been corrected.**
- **When this procedure is carried out, be sure to drive the vehicle at lawful speed and pay attention to the other vehicles.**

1. Connect the WDS or equivalent to the DLC-2.
2. Turn the ignition key to ON (engine OFF).
3. Verify that DTCs are cleared from memory.
4. Decrease ATF temperature to **20 °C {68 °F} or below**.
5. Start the engine then wait **180 seconds or more**.
6. Warm up the engine and ATX.
   - Engine coolant temperature: **60 °C {140 °F} or above**.
   - Transaxle fluid temperature: **20 °C {68 °F} or above**.
7. Shift the selector lever between P position to L range while depressing brake pedal.
8. Drive the vehicle for **150 seconds or more** at a vehicle speed **between 25 and 59 km/h {15 and 36 mph}**, then **60 km/h {37 mph} or more** for **100 seconds or more**.

9. Drive the vehicle in D range and shift gears between 1st and 4th (TCC operation) gear.
10. Gradually slow down and stop the vehicle.
11. Make sure that the repaired DTC does not recur.

DTC TABLE

A6E567001030W04

DTC No.	Condition	MIL	HOLD indicator light flashes	DC	Monitor item	Memory function	Page
P0010	CMP actuator circuit malfunction	(See F–67 DTC TABLE)					
P0011	CMP timing over advanced	(See F–67 DTC TABLE)					
P0012	CMP timing over retarded	(See F–67 DTC TABLE)					
P0031	Front HO2S heater circuit low	(See F–67 DTC TABLE)					
P0032	Front HO2S heater circuit high	(See F–67 DTC TABLE)					
P0037	Rear HO2S heater circuit low	(See F–67 DTC TABLE)					
P0038	Rear HO2S heater circuit high	(See F–67 DTC TABLE)					
P0101	MAF sensor inconsistent with TP sensor	(See F–67 DTC TABLE)					
P0102	MAF circuit low input	(See F–67 DTC TABLE)					
P0103	MAF circuit high input	(See F–67 DTC TABLE)					
P0107	MAP sensor circuit low input	(See F–67 DTC TABLE)					
P0108	MAP sensor circuit high input	(See F–67 DTC TABLE)					
P0111	IAT circuit performance problem	(See F–67 DTC TABLE)					
P0112	IAT circuit low input	(See F–67 DTC TABLE)					
P0113	IAT circuit high input	(See F–67 DTC TABLE)					
P0117	ECT circuit low input	(See F–67 DTC TABLE)					
P0118	ECT circuit high input	(See F–67 DTC TABLE)					
P0121	Throttle position stuck close	(See F–67 DTC TABLE)					
P0122	TP circuit low input	(See F–67 DTC TABLE)					
P0123	TP circuit high input	(See F–67 DTC TABLE)					
P0125	Excessive time to enter closed loop fuel control	(See F–67 DTC TABLE)					
P0131	Front HO2S no inversion (low stuck)	(See F–67 DTC TABLE)					
P0132	Front HO2S no inversion (high stuck)						
P0133	Front HO2S circuit malfunction	(See F–67 DTC TABLE)					
P0134	Front HO2S circuit no activity detected	(See F–67 DTC TABLE)					
P0138	Rear HO2S circuit high input	(See F–67 DTC TABLE)					
P0140	Rear HO2S circuit no activity detected	(See F–67 DTC TABLE)					
P0171	Fuel trim system too lean	(See F–67 DTC TABLE)					
P0172	Fuel trim system too rich	(See F–67 DTC TABLE)					
P0300	Random misfire detected	(See F–67 DTC TABLE)					
P0301	Cylinder No.1 misfire detected	(See F–67 DTC TABLE)					
P0302	Cylinder No.2 misfire detected						
P0303	Cylinder No.3 misfire detected						
P0304	Cylinder No.4 misfire detected						
P0327	Knock sensor circuit low input	(See F–67 DTC TABLE)					
P0328	Knock sensor circuit high input	(See F–67 DTC TABLE)					
P0335	CKP sensor circuit malfunction	(See F–67 DTC TABLE)					
P0340	CMP sensor circuit malfunction	(See F–67 DTC TABLE)					
P0351	Ignition coil (No.1, No.4) circuit malfunction	(See F–67 DTC TABLE)					
P0352	Ignition coil (No.2, No.3) circuit malfunction	(See F–67 DTC TABLE)					
P0401	EGR flow insufficient detected	(See F–67 DTC TABLE)					
P0402	EGR flow excessive detected	(See F–67 DTC TABLE)					
P0403	EGR valve motor coils open or short	(See F–67 DTC TABLE)					
P0420	Catalyst system efficiency below threshold	(See F–67 DTC TABLE)					
P0443	Evaporative emission control system purge control valve circuit malfunction	(See F–67 DTC TABLE)					
P0480	Fan control module circuit malfunction	(See F–67 DTC TABLE)					

DTC No.	Condition	MIL	HOLD indicator light flashes	DC	Monitor item	Memory function	Page
P0500	VSS circuit malfunction (MTX)	(See F–67 DTC TABLE)					
	VSS circuit malfunction (ATX)	ON	YES	2	CCM	×	(See K–55 DTC P0500)
P0505	Idle control system malfunction	(See F–67 DTC TABLE)					
P0506	Idle control system RPM lower than expected	(See F–67 DTC TABLE)					
P0507	Idle control system RPM higher than expected	(See F–67 DTC TABLE)					
P0511	IAC valve circuit malfunction	(See F–67 DTC TABLE)					
P0550	PSP switch circuit malfunction	(See F–67 DTC TABLE)					
P0602	PCM programming error	(See F–67 DTC TABLE)					
P0610	Control module vehicle options error	(See F–67 DTC TABLE)					
P0661	VICS circuit low input	(See F–67 DTC TABLE)					
P0662	VICS circuit high input	(See F–67 DTC TABLE)					
P0703	Brake switch input malfunction	(See F–67 DTC TABLE)					
P0704	Clutch switch input malfunction	(See F–67 DTC TABLE)					
P0706	Transaxle range (TR) switch circuit range/ performance	ON	YES	2	CCM	×	(See K–57 DTC P0706)
P0707	Transaxle range (TR) switch circuit low input	ON	YES	1	CCM	×	(See K–58 DTC P0707)
P0708	Transaxle range (TR) switch circuit high input	ON	YES	2	CCM	×	(See K–60 DTC P0708)
P0711	Transaxle fluid temperature (TFT) sensor circuit range/performance (Stuck)	ON	NO	2	CCM	×	(See K–63 DTC P0711)
P0712	Transaxle fluid temperature (TFT) sensor circuit malfunction (short to ground)	ON	YES	1	CCM	×	(See K–64 DTC P0712)
P0713	Transaxle fluid temperature (TFT) sensor circuit malfunction (open circuit)	ON	YES	1	CCM	×	(See K–65 DTC P0713)
P0715	Input/turbine speed sensor circuit malfunction	ON	YES	1	CCM	×	(See K–68 DTC P0715)
P0731	Gear 1 incorrect (Incorrect Gear Ratio Detected)	OFF	YES	1	CCM	×	(See K–70 DTC P0731)
P0732	Gear 2 incorrect (Incorrect Gear Ratio Detected)	OFF	YES	1	CCM	×	(See K–71 DTC P0732)
P0733	Gear 3 incorrect (Incorrect Gear Ratio Detected)	OFF	YES	1	CCM	×	(See K–73 DTC P0733)
P0734	Gear 4 incorrect (Incorrect Gear Ratio Detected)	OFF	YES	1	CCM	×	(See K–75 DTC P0734)
P0741	Torque converter clutch (TCC) (stuck OFF)	OFF	YES	1	CCM	×	(See K–77 DTC P0741)
P0742	Torque converter clutch (TCC) (stuck ON)	OFF	YES	1	CCM	×	(See K–78 DTC P0742)
P0745	Pressure control solenoid malfunction	OFF	YES	1	CCM	×	(See K–80 DTC P0745)
P0751	Shift solenoid A stuck OFF	ON	YES	2	CCM	×	(See K–82 DTC P0751)
P0752	Shift solenoid A stuck ON	ON	YES	2	CCM	×	(See K–83 DTC P0752)
P0753	Shift solenoid A malfunction (electrical)	ON	YES	1	CCM	×	(See K–85 DTC P0753)
P0756	Shift solenoid B stuck OFF	ON	YES	2	CCM	×	(See K–87 DTC P0756)
P0757	Shift solenoid B stuck ON	ON	YES	2	CCM	×	(See K–89 DTC P0757)
P0758	Shift solenoid B malfunction (electrical)	ON	YES	1	CCM	×	(See K–90 DTC P0758)
P0761	Shift solenoid C stuck OFF	ON	YES	2	CCM	×	(See K–93 DTC P0761)

DTC No.	Condition	MIL	HOLD indicator light flashes	DC	Monitor item	Memory function	Page
P0762	Shift solenoid C stuck ON	ON	YES	2	CCM	×	(See K–95 DTC P0762)
P0763	Shift solenoid C malfunction (electrical)	ON	YES	1	CCM	×	(See K–96 DTC P0763)
P0766	Shift solenoid D stuck OFF	ON	YES	2	CCM	×	(See K–99 DTC P0766)
P0767	Shift solenoid D stuck ON	ON	YES	2	CCM	×	(See K–100 DTC P0767)
P0768	Shift solenoid D malfunction (electrical)	ON	YES	1	CCM	×	(See K–102 DTC P0768)
P0771	Shift solenoid E stuck OFF	ON	YES	2	CCM	×	(See K–104 DTC P0771)
P0772	Shift solenoid E stuck ON	ON	YES	2	CCM	×	(See K–105 DTC P0772)
P0773	Shift solenoid E malfunction (electrical)	ON	YES	1	CCM	×	(See K–107 DTC P0773)
P0841	Oil pressure switch circuit malfunction	OFF	NO	2	CCM	×	(See K–109 DTC P0841)
P0850	Neutral switch input malfunction	(See F–67 DTC TABLE)					
P1410	Variable air duct valve circuit malfunction	(See F–67 DTC TABLE)					
P1562	PCM +BB voltage low	(See F–67 DTC TABLE)					
P2006	VTCS stuck close	(See F–67 DTC TABLE)					
P2009	VTCS circuit low input	(See F–67 DTC TABLE)					
P2010	VTCS circuit high input	(See F–67 DTC TABLE)					
P2228	BARO sensor circuit low input	(See F–67 DTC TABLE)					
P2229	BARO sensor circuit high input	(See F–67 DTC TABLE)					
P2502	Generator output voltage signal no electricity	(See F–67 DTC TABLE)					
P2503	Battery overcharge	(See F–67 DTC TABLE)					
P2504	Generator terminal B circuit open	(See F–67 DTC TABLE)					
U0073	CAN bus off	(See F–67 DTC TABLE)					
U0121	PCM cannot receive any signals from ABS, ABS/TCS or DSC HU/CM	(See F–67 DTC TABLE)					
U0155	PCM cannot receive any signals from combination meter	(See F–67 DTC TABLE)					

K

DTC P0500

A6E567001030W05

DTC P0500	Vehicle speed sensor (VSS) circuit malfunction
DETECTION CONDITION	• Vehicle speed signal not input after following conditions are met and **4.5 seconds or more** have passed — D, L, or S range. — Engine coolant temperature **60 °C {140 °F} or above**. — Turbine speed **1,500 rpm or above**. **Diagnostic support note:** • This is a continuous monitor (CCM). • MIL illuminates if PCM detects the above malfunction condition in two consecutive drive cycles or in one drive cycle while the DTC for the same malfunction has been stored in the PCM. • PENDING CODE is available if PCM detects the above malfunction condition during first drive cycle. • FREEZE FRAME DATA is available. • HOLD indicator light flashes. • DTC is stored in the PCM memory.
POSSIBLE CAUSE	• VSS malfunction • Open circuit between VSS terminal B and PCM terminal 3C • Short to ground between VSS terminal B and PCM terminal 3C • Open circuit between VSS terminal A and fuse block connector (X-01) terminal AJ • Open circuit between VSS terminal C and body ground • Damaged connectors between VSS and PCM • PCM malfunction

DTC P0500	Vehicle speed sensor (VSS) circuit malfunction

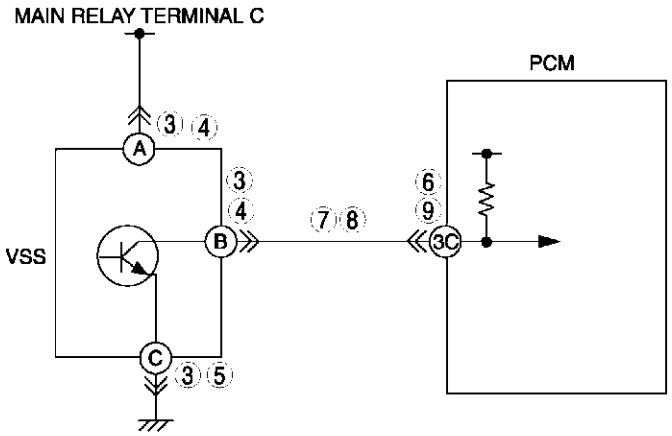

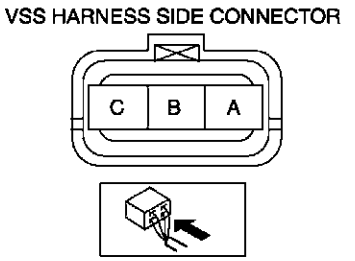

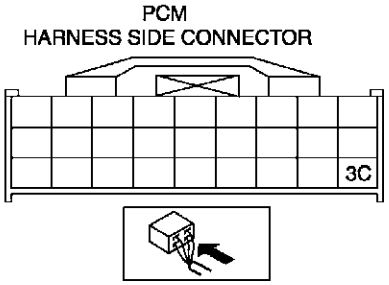

Diagnostic procedure

STEP	INSPECTION		ACTION
1	**VERIFY FREEZE FRAME DATA HAS BEEN RECORDED** • Has FREEZE FRAME PID DATA been recorded?	Yes	Go to next step.
		No	Record FREEZE FRAME PID DATA on repair order, then go to next step.
2	**VERIFY RELATED SERVICE INFORMATION AVAILABILITY** • Check for related Service Bulletins availability. • Is any related repair Information available?	Yes	Perform repair or diagnosis according to available repair Information. • If vehicle is not repaired, go to next step.
		No	Go to next step.
3	**INSPECT VSS CONNECTOR FOR POOR CONNECTION** • Turn ignition key to OFF. • Disconnect VSS connector. • Check for poor connection (damaged/pulled-out terminals, corrosion, etc.). • Is connection okay?	Yes	Go to next step.
		No	Repair or replace pin or connector, then go to Step 10.
4	**INSPECT VSS POWER CIRCUIT FOR OPEN CIRCUIT** • Verify that VSS connector is disconnected. • Turn ignition key to ON (Engine OFF). • Check voltage between VSS terminal A (harness-side) and ground • Is voltage reading **B+**?	Yes	Go to next step.
		No	Repair or replace harness, then go to Step 10.
5	**INSPECT VSS GROUND CIRCUIT FOR OPEN** • Turn ignition key to OFF. • Verify that VSS connector is disconnected. • Check for continuity between VSS terminal C (harness-side) and ground • Is there continuity?	Yes	Go to next step.
		No	Repair or replace harness, then go to Step 10.

STEP	INSPECTION		ACTION
6	**INSPECT PCM CONNECTOR FOR POOR CONNECTION** • Disconnect PCM connector. • Check for poor connection (damaged/pulled-out terminals, corrosion, etc.). • Is connection okay?	Yes	Go to next step.
		No	Repair or replace pin or connector, then go to Step 10.
7	**INSPECT VEHICLE SPEED SIGNAL CIRCUIT FOR OPEN** • Disconnect PCM connector and VSS connector. • Inspect for continuity between VSS terminal B and PCM terminal 3C. • Is there continuity?	Yes	Go to next step.
		No	Repair or replace harness, then go to Step 10.
8	**INSPECT VEHICLE SPEED SIGNAL CIRCUIT FOR SHORT TO GROUND** • Verity that VSS connector and PCM connector are disconnected. • Inspect for continuity between PCM terminal 3C and body ground. • Is there continuity?	Yes	Repair or replace harness, then go to Step 10.
		No	Repair VSS, then go to Step 14.
9	**INSPECT PCM CONNECTOR FOR POOR CONNECTION** • Disconnect PCM connector. • Check for poor connection (damaged/pulled-out terminals, corrosion, etc.). • Is connection okay?	Yes	Go to next step.
		No	Repair or replace pin or connector, then go to Step 10.
10	**VERIFY TROUBLESHOOTING OF DTC P0500 COMPLETED** • Make sure to reconnect all disconnected connectors. • Clear DTC from memory using WDS or equivalent. • Warm up engine. • Drive vehicle under following conditions for **4.5 seconds** or more while monitoring PIDs. — Engine coolant temp: **60 °C {140 °F} or above** — Drive in L range — Frequency of input/turbine speed sensor: **800 Hz or above** • Is pending code present?	Yes	Replace PCM, then go to next step. (See F–43 PCM REMOVAL/INSTALLATION.)
		No	No concern is detected. Go to next step.
11	**VERIFY AFTER REPAIR PROCEDURE** • Perform “After Repair Procedure”. (See K–52 AFTER REPAIR PROCEDURE.) • Are any DTCs present?	Yes	Go to applicable DTC inspection.
		No	Troubleshooting completed.

DTC P0706

A6E567001030W06

DTC P0706	Transaxle range (TR) switch range/performance
DETECTION CONDITION	• When all conditions below are satisfied and **100 seconds or more** have passed. — Engine speed **530 rpm or above**. — Vehicle speed **20 km/h {12 mph} or above**. — voltage at PCM terminal 1W is **0.5 V or above**. — P, R, N, D, S or L range/position not detected. **Diagnostic support note:** • This is a continuous monitor (CCM). • MIL illuminates if PCM detects the above malfunction condition in two consecutive drive cycles or in one drive cycle while the DTC for the same malfunction has been stored in the PCM. • PENDING CODE is available if PCM detects the above malfunction condition during first drive cycle. • FREEZE FRAME DATA is available. • HOLD indicator light flashes. • DTC is stored in the PCM memory.
POSSIBLE CAUSE	• TR switch malfunction • TR switch misadjustment • PCM malfunction

Diagnostic procedure

STEP	INSPECTION		ACTION
1	**VERIFY FREEZE FRAME DATA HAS BEEN RECORDED** • Has FREEZE FRAME PID DATA been recorded?	Yes	Go to next step.
		No	Record FREEZE FRAME PID DATA on repair order, then go to next step.
2	**VERIFY RELATED REPAIR INFORMATION AVAILABILITY** • Check for related Service Bulletins availability. • Is any related repair information available?	Yes	Perform repair or diagnosis according to available repair information. • If vehicle is not repaired, go to next step.
		No	Go to next step.
3	**INSPECT TR SWITCH** • Turn ignition key to OFF. • Disconnect TR switch connector. • Inspect for resistance between TR switch terminals B and C (part-side). • Is resistance okay? (See K–14 TRANSAXLE RANGE (TR) SWITCH INSPECTION.)	Yes	Go to next step.
		No	Adjust TR switch, then go to next step. (See K–18 TRANSAXLE RANGE (TR) SWITCH ADJUSTMENT.)
4	**VERIFY TROUBLESHOOTING OF DTC P0706 COMPLETED** • Make sure to reconnect all disconnected connectors. • Clear DTC from memory using WDS or equivalent. • Drive vehicle in each range (D, S, L, and R) for **100 seconds or more** under following conditions. — Engine speed (RPM PID) **530 rpm or above** — Vehicle speed **(VSS PID) 20 km/h {12 mph} or above** • Is pending code present?	Yes	Replace PCM, then go to next step. (See F–43 PCM REMOVAL/INSTALLATION.)
		No	No concern is detected. Go to next step.
5	**VERIFY AFTER REPAIR PROCEDURE** • Perform “After Repair Procedure”. (See K–52 AFTER REPAIR PROCEDURE.) • Are any DTCs present?	Yes	Go to applicable DTC inspection.
		No	Troubleshooting completed.

DTC P0707

A6E567001030W07

DTC P0707	Transaxle range (TR) switch circuit low input
DETECTION CONDITION	• When all conditions below satisfied and **100 seconds or more** have passed: — Vehicle speed **20 km/h {12 mph} or above**. — Engine speed **530 rpm or above**. — Voltage at PCM terminal 1W is **below 0.5 V**. **Diagnostic support note:** • This is a continuous monitor (CCM). • MIL illuminates if PCM detects the above malfunction condition during first drive cycle. • PENDING CODE is not available. • FREEZE FRAME DATA is available. • HOLD indicator light flashes. • DTC is stored in the PCM memory.
POSSIBLE CAUSE	• TR switch malfunction • Short to ground between TR switch terminal C and PCM terminal 1W • TR switch signal and TR switch ground circuits are shorted each other • PCM malfunction

DTC P0707	Transaxle range (TR) switch circuit low input

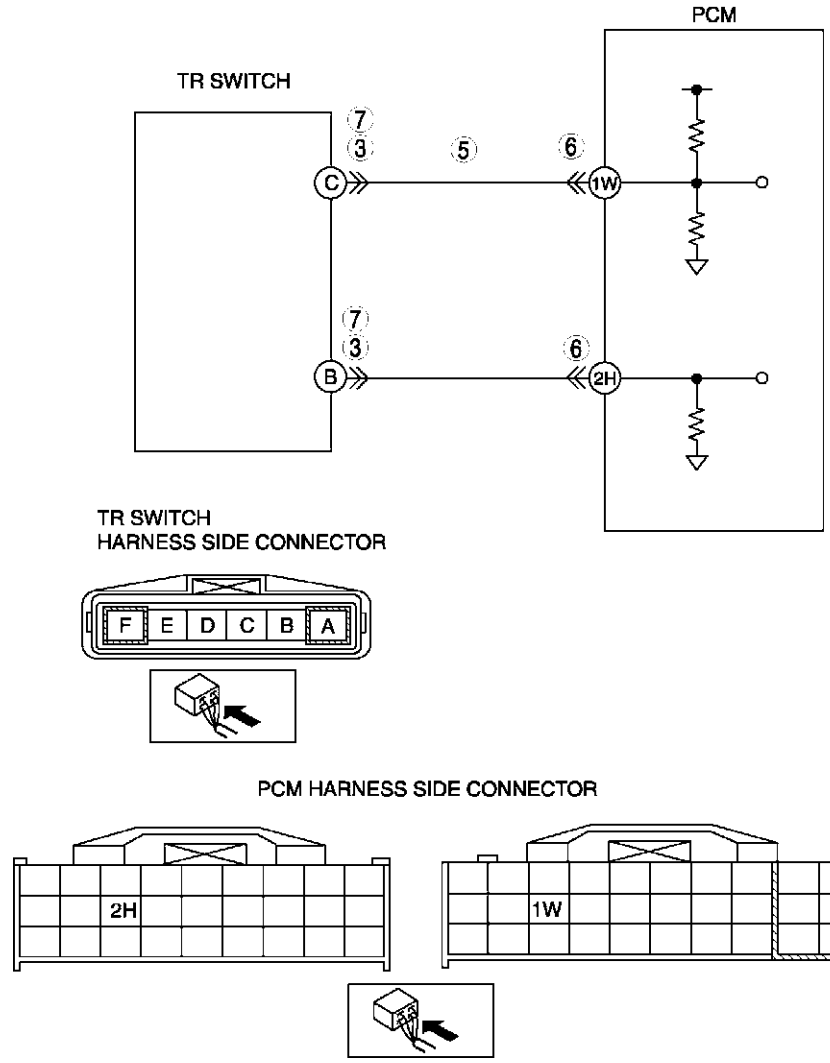

K

Diagnostic procedure

STEP	INSPECTION		ACTION
1	**VERIFY FREEZE FRAME DATA HAS BEEN RECORDED** • Has FREEZE FRAME PID DATA been recorded?	Yes	Go to next step.
		No	Record FREEZE FRAME PID DATA on repair order, then go to next step.
2	**VERIFY RELATED REPAIR INFORMATION AVAILABILITY** • Check for related Service Bulletins availability. • Is any related repair information available?	Yes	Perform repair or diagnosis according to available repair information. • If vehicle is not repaired, go to next step.
		No	Go to next step.
3	**INSPECT TR SWITCH CONNECTOR** • Turn ignition key OFF. • Disconnect TR switch connector. • Inspect for bent terminals of TR switch terminals B and C (part-side). • Are TR switch terminals okay?	Yes	Go to next step.
		No	Repair terminals or replace TR switch, then go to Step 7. (See K–15 TRANSAXLE RANGE (TR) SWITCH REMOVAL/INSTALLATION.)
4	**INSPECT TR SWITCH** • Turn ignition key to OFF. • Disconnect TR switch connector. • Inspect for resistance between TR switch terminals B and C (part-side). • Is resistance okay? (See K–14 TRANSAXLE RANGE (TR) SWITCH INSPECTION.)	Yes	Go to next step.
		No	Adjust TR switch, then go to Step 7. (See K–18 TRANSAXLE RANGE (TR) SWITCH ADJUSTMENT.)

STEP	INSPECTION		ACTION
5	**INSPECT TR SWITCH SIGNAL CIRCUIT FOR SHORT TO GROUND** • Turn ignition key to OFF. • Disconnect PCM connector • Check for continuity between TR switch terminal C (harness-side) and body ground. • Is there continuity?	Yes	Repair or replace harness for short to ground, then Go to step 7.
		No	Go to next step.
6	**INSPECT PCM CONNECTOR FOR POOR CONNECTION** • Disconnect PCM connector. • Check for poor connection at terminals 1W and 2H (damaged/pulled-out pins, corrosion, etc.). • Is there malfunction?	Yes	Repair or replace terminal, then Go to step 9.
		No	Go to next step.
7	**INSPECT TR SWITCH CIRCUIT FOR SHORT** • Check for continuity between TR switch terminals B and C (harness-side). • Is there continuity?	Yes	Repair or replace harness for short, then go to next step.
		No	Go to next step.
8	**VERIFY TROUBLESHOOTING OF DTC P0707 COMPLETED** • Make sure to reconnect all disconnected connectors. • Clear DTC from memory using WDS or equivalent. • Drive vehicle for **100 seconds or more** under following conditions. — Engine speed (RPM PID) **530 rpm or above** — Vehicle speed **(VSS PID) 20 km/h {12 mph} or above** • Is pending code present?	Yes	Replace PCM, then go to next step. (See F–43 PCM REMOVAL/INSTALLATION.)
		No	No concern is detected. Go to next step.
9	**VERIFY AFTER REPAIR PROCEDURE** • Perform “After Repair Procedure”. (See K–52 AFTER REPAIR PROCEDURE.) • Are any DTCs present?	Yes	Go to applicable DTC inspection.
		No	Troubleshooting completed.

DTC P0708

A6E567001030W08

DTC P0708	Transaxle range (TR) switch circuit high input
DETECTION CONDITION	• When all conditions below satisfied and **100 seconds or more** have passed: — Vehicle speed **20 km/h {12 mph} or above**. — Engine speed **530 rpm or above**. — Voltage at PCM terminal 1W is **4.79 V or above**. **Diagnostic support note:** • This is a continuous monitor (CCM). • MIL illuminates if PCM detects the above malfunction condition in two consecutive drive cycles or in one drive cycle while the DTC for the same malfunction has been stored in the PCM. • PENDING CODE is not available. • FREEZE FRAME DATA is available. • HOLD indicator light flashes. • DTC is stored in the PCM memory.
POSSIBLE CAUSE	• TR switch malfunction • Open circuit between TR switch terminal C and PCM terminal 1W • Short to power circuit between TR switch terminal C and PCM terminal 1W • Open circuit between TR switch terminal B and PCM terminal 2H • Poor connection of TR switch or PCM connectors • PCM malfunction

DTC P0708	Transaxle range (TR) switch circuit high input

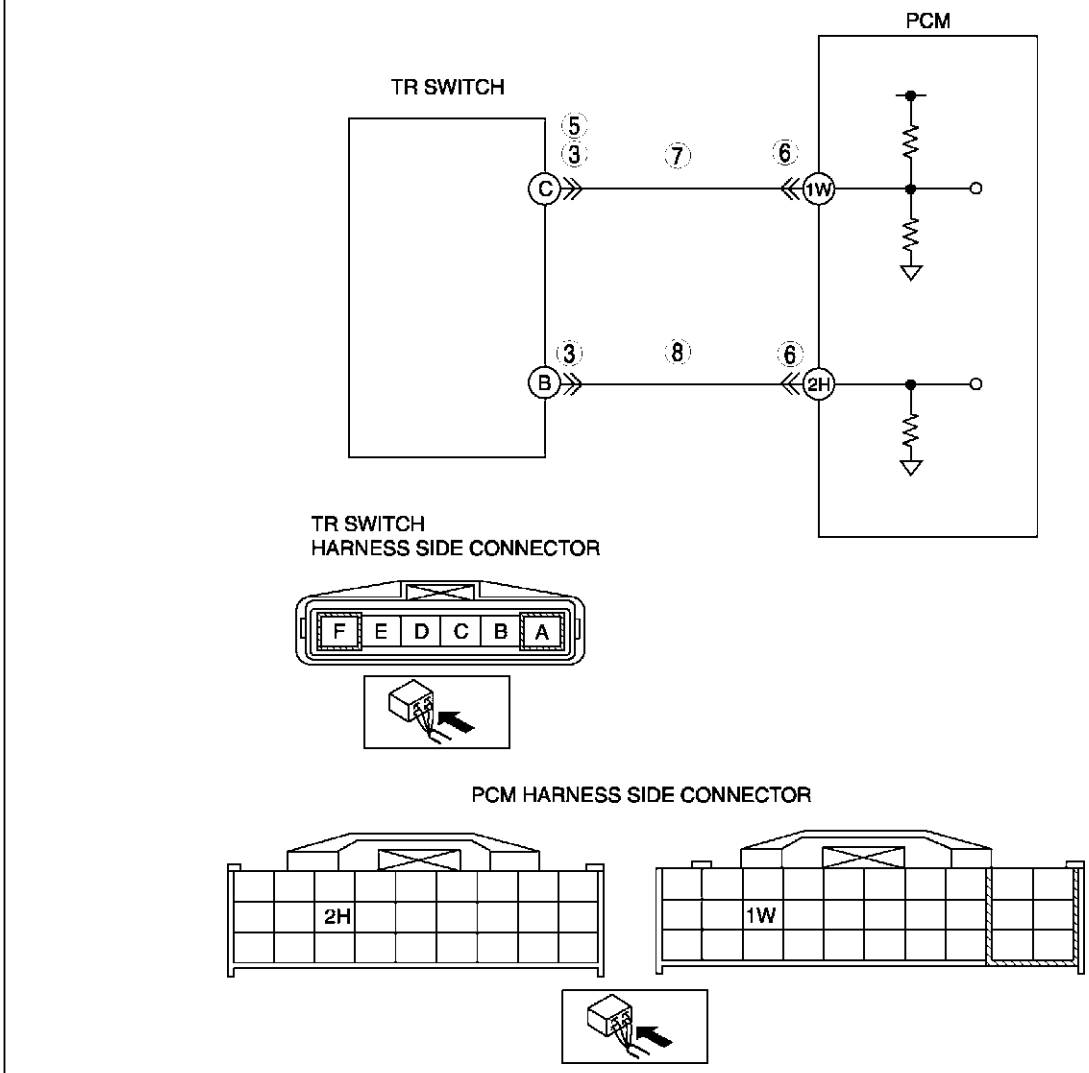

K

Diagnostic procedure

STEP	INSPECTION		ACTION
1	**VERIFY FREEZE FRAME DATA HAS BEEN RECORDED** • Has FREEZE FRAME PID DATA been recorded?	Yes	Go to next step.
		No	Record FREEZE FRAME PID DATA on repair order, then go to next step.
2	**VERIFY RELATED REPAIR INFORMATION AVAILABILITY** • Check for related Service Bulletins availability. • Is any related repair information available?	Yes	Perform repair or diagnosis according to available repair information. • If vehicle is not repaired, go to next step.
		No	Go to next step.
3	**INSPECT TR SWITCH CONNECTOR FOR POOR CONNECTION** • Turn ignition key OFF. • Disconnect TR switch connector. • Check for poor connection (damaged/pulled-out pins, corrosion, etc.). • Are TR switch terminals okay?	Yes	Go to next step.
		No	Repair terminals or replace TR switch, then go to Step 9. (See K–15 TRANSAXLE RANGE (TR) SWITCH REMOVAL/INSTALLATION.)

STEP	INSPECTION		ACTION
4	**INSPECT TR SWITCH** • Turn ignition key to OFF. • Disconnect TR switch connector. • Inspect for resistance between TR switch terminals B and C (part-side). • Is resistance okay? (See K–14 TRANSAXLE RANGE (TR) SWITCH INSPECTION.)	Yes	Go to next step.
		No	Adjust TR switch, then go to Step 9. (See K–18 TRANSAXLE RANGE (TR) SWITCH ADJUSTMENT.)
5	**INSPECT TR SWITCH SIGNAL CIRCUIT FOR SHORT TO POWER** • Turn ignition key to ON (engine OFF). • Measure the voltage between TR switch terminal C (harness-side) and body ground. • Is there voltage **B+**?	Yes	Repair or replace harness for short to power, then go to step 9.
		No	Go to next step.
6	**INSPECT PCM CONNECTOR FOR POOR CONNECTION** • Disconnect PCM connector. • Check for poor connection at terminals 1W and 2H (damaged/pulled-out pins, corrosion, etc.). • Is there malfunction?	Yes	Repair or replace terminal, then Go to step 9.
		No	Go to next step.
7	**INSPECT TR SWITCH SIGNAL CIRCUIT FOR OPEN CIRCUIT** • Check for continuity between TR switch terminal C (harness-side) and PCM terminal 1W. • Is there continuity?	Yes	Go to next step.
		No	Repair or replace harness for open, then go to step 9.
8	**INSPECT TR SWITCH GROUND CIRCUIT FOR OPEN CIRCUIT** • Check for continuity between TR switch terminal B (harness-side) and PCM terminal 2H. • Is there continuity?	Yes	Go to next step.
		No	Repair or replace harness for open, then go to next step.
9	**VERIFY TROUBLESHOOTING OF DTC P0708 COMPLETED** • Make sure to reconnect all disconnected connectors. • Clear DTC from memory using WDS or equivalent. • Drive vehicle for **100 seconds or more** under following conditions. — Engine speed (RPM PID) **530 rpm or above** — Vehicle speed **(VSS PID) 20 km/h {12 mph} or above** • Is pending code present?	Yes	Replace PCM, then go to next step. (See F–43 PCM REMOVAL/INSTALLATION.)
		No	No concern is detected. Go to next step.
10	**VERIFY AFTER REPAIR PROCEDURE** • Perform “After Repair Procedure”. (See K–52 AFTER REPAIR PROCEDURE.) • Are any DTCs present?	Yes	Go to applicable DTC inspection.
		No	Troubleshooting completed.

DTC P0711

A6E567001030W09

DTC P0711	Transaxle fluid temperature (TFT) sensor circuit range/performance (stuck)
DETECTION CONDITION	• When all conditions below are satisfied. — When **180 seconds** have passed after engine is started, vehicle is driven for **150 seconds or more** at vehicle speed **between 25 – 59 km/h {15 – 36 mph}**, then **60 km/h {37 mph} or more** for **100 seconds or more**. — P0712, P0713 not output. — Variation in ATF voltage **below 0.06 V**. **Diagnostic support note:** • This is a continuous monitor (CCM). • MIL illuminates if PCM detects the above malfunction condition in two consecutive drive cycles or in one drive cycle while the DTC for the same malfunction has been stored in the PCM. • PENDING CODE is available if PCM detects the above malfunction condition during first drive cycle. • FREEZE FRAME DATA is available. • HOLD indicator light does not flash. • DTC is stored in the PCM memory.
POSSIBLE CAUSE	• TFT sensor malfunction • Connector corrosion • PCM malfunction

K

Diagnostic procedure

STEP	INSPECTION		ACTION
1	**VERIFY FREEZE FRAME DATA HAS BEEN RECORDED** • Has FREEZE FRAME PID DATA been recorded?	Yes	Go to next step.
		No	Record FREEZE FRAME PID DATA on repair order, then go to next step.
2	**VERIFY RELATED REPAIR INFORMATION AVAILABILITY** • Check for related Service Bulletins availability. • Is any related repair information available?	Yes	Perform repair or diagnosis according to available repair information. • If vehicle is not repaired, go to next step.
		No	Go to next step.
3	**INSPECT TFT SENSOR VOLTAGE** • Turn ignition key to OFF. • Connect breakout box to PCM. • Turn ignition key to ON (engine OFF). • Measure the voltage at PCM terminal 3D. • Record terminal 3D voltage. • Start engine. • Drive vehicle at **60 km/h {37 mph} or above** for **430 seconds or more**. • Record terminal 3D voltage again. • Is variation in voltage **0.06V or above**?	Yes	Go to Step 5.
		No	Go to next step.
4	**INSPECT TERMINAL CONDITION** • Turn ignition key to OFF. • Disconnect ATX connector. • Inspect terminals for corrosion. • Are terminals okay?	Yes	Go to next step.
		No	Repair or replace terminals, then go to next step.
5	**VERIFY TROUBLESHOOTING OF DTC P0711 COMPLETED** • Make sure to reconnect all disconnected connectors. • Clear DTC from memory using WDS or equivalent. • Decrease ATF temperature to **20 °C {68 °F} or below**. • Start engine and wait for **180 seconds or more**. • Drive vehicle at a vehicle speed **between 25 – 59 km/h {15 – 36 mph}** for **150 seconds or more**. • Drive vehicle at vehicle speed **60 km/h {37 mph} or above** for **100 seconds or more**. • Is pending code present?	Yes	Replace PCM, then go to next step. (See F–43 PCM REMOVAL/INSTALLATION.)
		No	Go to next step.
6	**VERIFY AFTER REPAIR PROCEDURE** • Perform “After Repair Procedure”. (See K–52 AFTER REPAIR PROCEDURE.) • Are any DTCs present?	Yes	Go to applicable DTC inspection.
		No	Troubleshooting completed.

DTC P0712

A6E567001030W10

DTC P0712	Transaxle fluid temperature (TFT) sensor circuit malfunction (short to ground)
DETECTION CONDITION	• If PCM detects either of following conditions for **150 seconds or more**, PCM determines that TFT sensor circuit has a malfunction. — TFT sensor voltage is **0.06 V or below** and vehicle speed **20 km/h {12 mph} or above**. **Diagnostic support note:** • This is a continuous monitor (CCM). • MIL illuminates if PCM detects the above malfunction conditions during first drive cycle. • PENDING CODE is not available. • FREEZE FRAME DATA is available. • HOLD indicator light flashes. • DTC is stored in the PCM memory.
POSSIBLE CAUSE	• TFT sensor malfunction • Short to ground between TFT sensor terminal A and ATX connector terminal E • Short to ground between TFT sensor terminal B and ATX connector terminal H • Short to ground between ATX connector terminal E and PCM terminal 3D • Damaged connectors between TFT sensor and PCM • PCM malfunction

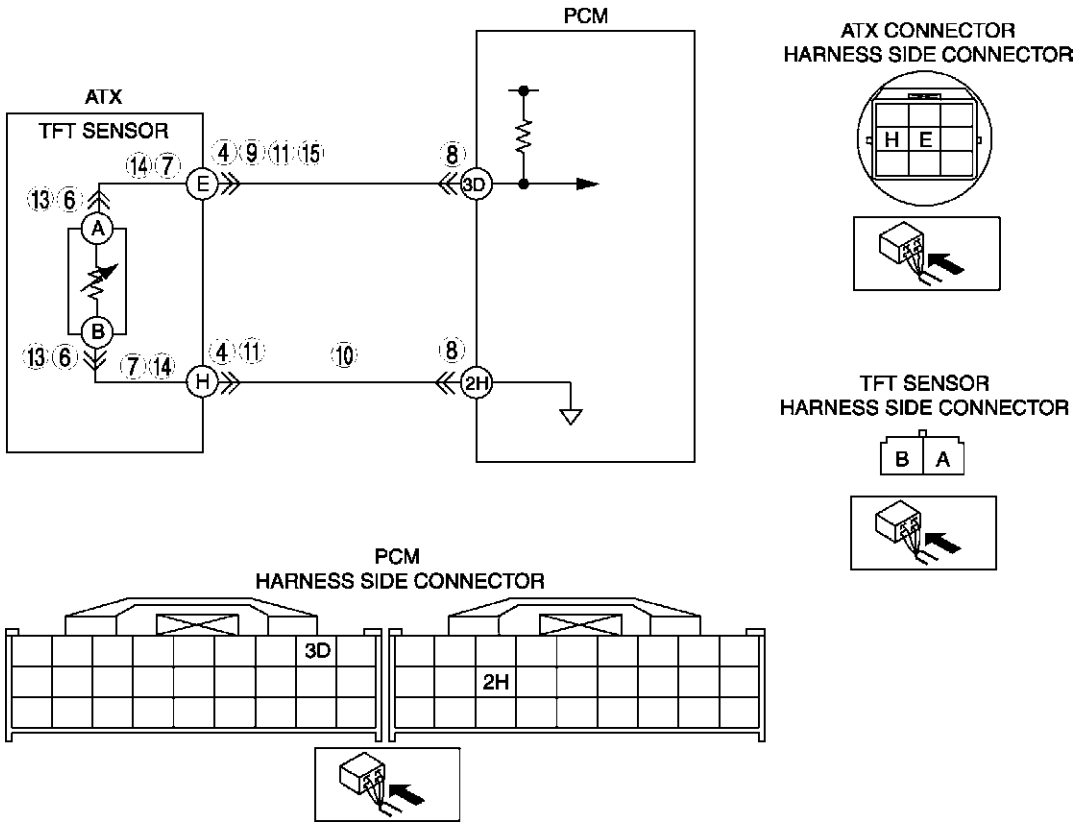

Diagnostic procedure

STEP	INSPECTION		ACTION
1	**VERIFY FREEZE FRAME DATA HAS BEEN RECORDED** • Has FREEZE FRAME PID DATA been recorded?	Yes	Go to next step.
		No	Record FREEZE FRAME PID DATA on repair order, then go to next step.
2	**VERIFY RELATED REPAIR INFORMATION AVAILABILITY** • Check for related Service Bulletins availability. • Is any related repair information available?	Yes	Perform repair or diagnosis according to available repair information. • If vehicle is not repaired, go to next step.
		No	Go to next step.

STEP	INSPECTION		ACTION
3	**VERIFY CURRENT INPUT SIGNAL STATUS** • Turn ignition key to OFF. • Connect breakout box to PCM. • Turn ignition key to ON (engine OFF). • Measure the voltage at PCM terminal 3D. • Are voltage readings **above 0.06 V**?	Yes	Go to intermittent concern troubleshooting procedure. (See F–227 INTERMITTENT CONCERN TROUBLESHOOTING.)
		No	Go to next step.
4	**INSPECT TERMINAL CONDITION** • Turn ignition key to OFF. • Disconnect ATX connector. • Inspect for bent terminals. • Are the terminals bent?	Yes	Repair or replace terminals, then go to Step 9. • If terminals cannot be repaired, replace harness, then go to Step 9.
		No	Go to next step.
5	**INSPECT TFT SENSOR CIRCUIT** • Turn ignition key to ON (engine OFF). • Verify if voltage changes to **4.67 V or above** at PCM terminal 3D when ATX connector disconnected. • Does voltage change?	Yes	Go to next step.
		No	Go to Step 8.
6	**INSPECT TFT SENSOR TERMINALS CONDITION** • Turn ignition key to OFF. • Disconnect TFT sensor connector. • Inspect for bent TFT sensor terminals. • Are the terminals bent?	Yes	Repair terminals or replace TFT sensor, then go to Step 9. (See K–21 TRANSAXLE FLUID TEMPERATURE (TFT) SENSOR REMOVAL/INSTALLATION.)
		No	Go to next step.
7	**INSPECT TFT SENSOR CIRCUIT FOR SHORT TO GROUND** • Inspect for continuity between TFT sensor terminals (harness-side) and body ground. — A and body ground — B and body ground • Is there continuity?	Yes	Repair or replace harness, then go to Step 9.
		No	Replace TFT sensor, then go to step 9. (See K–21 TRANSAXLE FLUID TEMPERATURE (TFT) SENSOR REMOVAL/INSTALLATION.)
8	**INSPECT ATX CONNECTOR CIRCUIT FOR SHORT TO GROUND** • Turn ignition key to OFF. • Inspect for continuity between ATX connector terminal E (vehicle harness-side) and body ground. • Is there continuity?	Yes	Repair or replace harness, then go to next step.
		No	Go to next step.
9	**VERIFY TROUBLESHOOTING OF DTC P0712 COMPLETED** • Make sure to reconnect all disconnected connectors. • Clear DTC from memory using WDS or equivalent. • Drive vehicle under following condition for **150 seconds or more**. — Vehicle speed (VSS PID) **20 km/h {12 mph} or above**. • Is same DTC present?	Yes	Replace PCM, then go to next step. (See F–43 PCM REMOVAL/INSTALLATION.)
		No	Go to next step.
10	**VERIFY AFTER REPAIR PROCEDURE** • Perform “After Repair Procedure”. (See K–52 AFTER REPAIR PROCEDURE.) • Are any DTCs present?	Yes	Go to applicable DTC inspection.
		No	Troubleshooting completed.

DTC P0713

A6E567001030W11

DTC P0713	Transaxle fluid temperature (TFT) sensor circuit malfunction (open circuit)
DETECTION CONDITION	• If PCM detects either of following conditions for **150 seconds or more**, PCM determines that TFT sensor circuit has a malfunction. — TFT sensor voltage is **4.67 V or above** and vehicle speed **20 km/h {12 mph} or above**. **Diagnostic support note:** • This is a continuous monitor (CCM). • MIL illuminates if PCM detects the above malfunction conditions during first drive cycle. • PENDING CODE is not available. • FREEZE FRAME DATA is available. • HOLD indicator light flashes. • DTC is stored in the PCM memory.

DTC P0713	Transaxle fluid temperature (TFT) sensor circuit malfunction (open circuit)
POSSIBLE CAUSE	• TFT sensor malfunction • Open circuit between TFT sensor terminal A and ATX connector terminal E • Open circuit between TFT sensor terminal B and ATX connector terminal H • Open circuit between ATX connector terminal E and PCM terminal 3D • Open circuit between ATX connector terminal H and PCM terminal 2H • Damaged connectors between TFT sensor and PCM • PCM malfunction

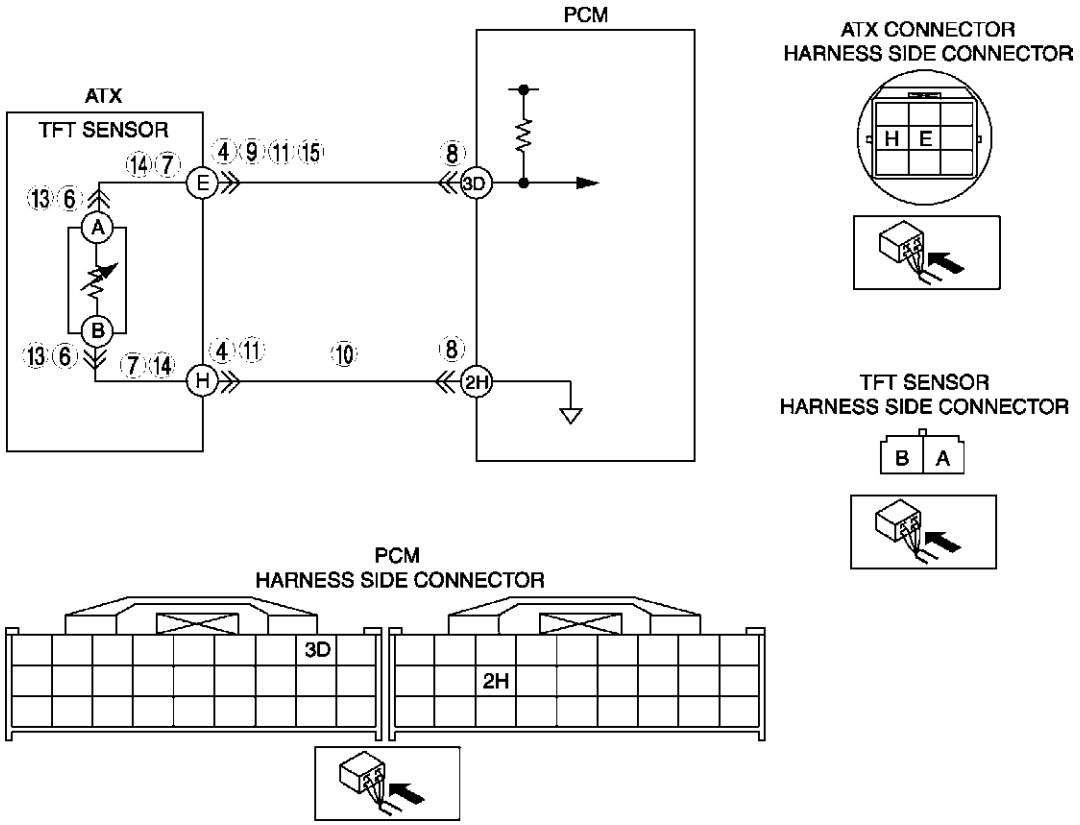

Diagnostic procedure

STEP	INSPECTION		ACTION
1	**VERIFY FREEZE FRAME DATA HAS BEEN RECORDED** • Has FREEZE FRAME PID DATA been recorded?	Yes	Go to next step.
		No	Record FREEZE FRAME PID DATA on repair order, then go to next step.
2	**VERIFY RELATED REPAIR INFORMATION AVAILABILITY** • Check for related Service Bulletins availability. • Is any related repair information available?	Yes	Perform repair or diagnosis according to available repair information. • If vehicle is not repaired, go to next step.
		No	Go to next step.
3	**VERIFY CURRENT INPUT SIGNAL STATUS** • Turn ignition key to OFF. • Connect breakout box to PCM. • Turn ignition key to ON (engine OFF). • Measure the voltage at PCM terminal 3D. • Are voltage readings **below 4.67 V**?	Yes	Go to intermittent concern troubleshooting procedure. (See F–227 INTERMITTENT CONCERN TROUBLESHOOTING.)
		No	Go to next step.
4	**INSPECT ATX CONNECTOR FOR POOR CONNECTION** • Turn ignition key to OFF. • Inspect ATX connector connection. • Disconnect ATX connector. • Check for poor connection (damaged/pulled-out terminals, corrosion etc.). • Is connection okay?	Yes	Go to next step.
		No	Repair or replace connector and/or terminal, then go to Step 11.

STEP	INSPECTION		ACTION
5	**INSPECT TFT SENSOR CIRCUIT** • Turn ignition key to ON (engine OFF). • Measure the voltage at PCM terminal 3D when connect between ATX connector terminals E and H (vehicle harness-side) using jumper wire. • Verify that voltage changes to **0.06 V or below**. • Does voltage change?	Yes	Go to next step.
		No	Go to Step 8.
6	**INSPECT TFT SENSOR CONNECTOR FOR POOR CONNECTION** • Turn ignition key to OFF. • Remove valve body cover. • Disconnect TFT sensor connector. • Check for poor connection (damaged/pulled-out terminals, corrosion, etc.). • Is connection okay?	Yes	Go to next step.
		No	Repair or replace connector and/or terminal or replace TFT sensor, then go to Step 11. (See K–21 TRANSAXLE FLUID TEMPERATURE (TFT) SENSOR REMOVAL/INSTALLATION.)
7	**INSPECT TFT SENSOR CIRCUIT FOR OPEN** • Check for continuity between TFT sensor terminals (harness-side) and ATX connector terminals (transaxle case side). — ATX connector terminal E and TFT sensor terminal A — ATX connector terminal H and TFT sensor terminal B • Is there continuity?	Yes	Replace TFT sensor, then go to Step 11. (See K–21 TRANSAXLE FLUID TEMPERATURE (TFT) SENSOR REMOVAL/INSTALLATION.)
		No	Repair or replace harness, then go to Step 11.
8	**INSPECT PCM CONNECTOR FOR POOR CONNECTION** • Turn ignition key to OFF. • Disconnect PCM connector. • Check for poor connection (damaged/pulled-out terminals, corrosion, etc.). • Is connection okay?	Yes	Go to next step.
		No	Repair or replace connector and/or terminal, then go to Step 11.
9	**INSPECT HARNESS FOR OPEN CIRCUIT** • Disconnect ATX connector. • Connect the PCM connector. • Turn ignition key to ON (engine OFF). • Inspect voltage at ATX connector terminal E (vehicle harness-side). • Is voltage **5 V**?	Yes	Go to next step.
		No	Repair or replace harness, then go to Step 11.
10	**INSPECT ATX CONNECTOR CIRCUIT FOR OPEN** • Turn ignition key to OFF. • Inspect continuity between ATX connector terminal H (vehicle harness-side) and body ground. • Is there continuity?	Yes	Go to next step.
		No	Repair or replace harness, then go to next step.
11	**VERIFY TROUBLESHOOTING OF DTC P0713 COMPLETED** • Make sure to reconnect all disconnected connectors. • Clear DTC from memory using WDS or equivalent. • Drive vehicle under following condition for **150 seconds or more**. — Vehicle speed (VSS PID) **20 km/h {12 mph} or above**. • Is same DTC present?	Yes	Replace PCM, then go to next step. (See F–43 PCM REMOVAL/INSTALLATION.)
		No	Go to next step.
12	**VERIFY AFTER REPAIR PROCEDURE** • Perform “After Repair Procedure”. (See K–52 AFTER REPAIR PROCEDURE.) • Are any DTCs present?	Yes	Go to applicable DTC inspection.
		No	Troubleshooting completed.

K

DTC P0715

A6E567001030W12

DTC P0715	Input/turbine speed sensor circuit malfunction
DETECTION CONDITION	• When all conditions below satisfied and **0.7 second or more** have passed. — D, S or L range of TR switch input. — Driving vehicle with vehicle speed **40 km/h {25 mph} or above**. — Input/turbine speed sensor signal not input. **Diagnostic support note:** • This is a continuous monitor (CCM). • MIL illuminates if PCM detects the above malfunction conditions during first drive cycle. • PENDING CODE is not available. • FREEZE FRAME DATA is available. • HOLD indicator light flashes. • DTC is stored in the PCM memory.
POSSIBLE CAUSE	• Input/turbine speed sensor malfunction • Short to ground between input/turbine speed sensor terminal A and PCM terminal 3J • Short to ground between input/turbine speed sensor terminal B and PCM terminal 3G • Open circuit between input/turbine speed sensor terminal A and PCM terminal 3J • Open circuit between input/turbine speed sensor terminal B and PCM terminal 3G • Damaged connectors between input/turbine speed sensor and PCM • PCM malfunction

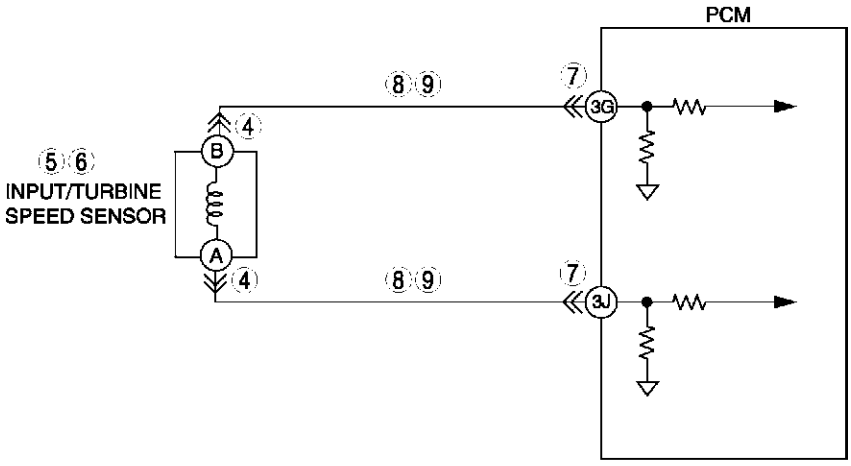

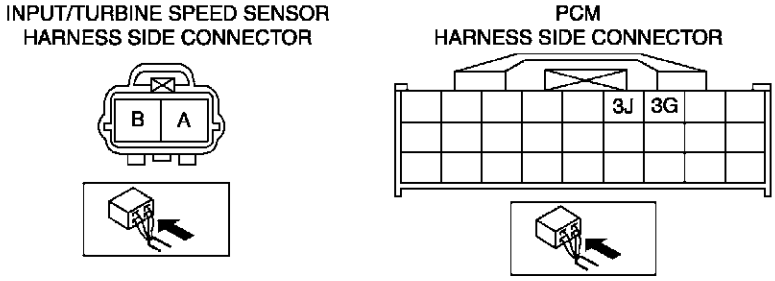

Diagnostic procedure

STEP	INSPECTION		ACTION
1	**VERIFY FREEZE FRAME DATA HAS BEEN RECORDED** • Has FREEZE FRAME PID DATA been recorded?	Yes	Go to next step.
		No	Record FREEZE FRAME PID DATA on repair order, then go to next step.
2	**VERIFY RELATED REPAIR INFORMATION AVAILABILITY** • Check for related Service Bulletins availability. • Is any related repair information available?	Yes	Perform repair or diagnosis according to available repair information. • If vehicle is not repaired, go to next step.
		No	Go to next step.

STEP	INSPECTION		ACTION
3	**VERIFY CURRENT INPUT SIGNAL STATUS** • Turn ignition key to OFF. • Start engine. • Measure frequency of input/turbine speed sensor using a oscilloscope. — IG ON: **0 Hz** — Idle: **Within 320—374 Hz** (P, N position) • Are frequency of input/turbine speed sensor readings within specifications?	Yes	Go to intermittent concern troubleshooting procedure. (See F–227 INTERMITTENT CONCERN TROUBLESHOOTING.)
		No	Go to next step.
4	**INSPECT INPUT/TURBINE SPEED SENSOR CONNECTOR FOR POOR CONNECTION** • Turn ignition key to OFF. • Disconnect input/turbine speed sensor connector. • Check for poor connection (damaged/pulled-out terminals, corrosion, etc.). • Is connection okay?	Yes	Go to next step.
		No	Repair or replace connector and/or terminals, then go to Step 10.
5	**INSPECT INPUT/TURBINE SPEED SENSOR RESISTANCE** • Measure resistance between input/turbine speed sensor terminals (part-side). • Is resistance **within 250—600 ohms** between input/turbine speed sensor terminals (part-side)? (See K–23 INPUT/TURBINE SPEED SENSOR INSPECTION.)	Yes	Go to next step.
		No	Replace input/turbine speed sensor, then go to Step 10. (See K–24 INPUT/TURBINE SPEED SENSOR REMOVAL/INSTALLATION.)
6	**INSPECT INPUT/TURBINE SPEED SENSOR** • Remove input/turbine speed sensor. • Is there iron powder stuck on input/turbine speed sensor? (See K–24 INPUT/TURBINE SPEED SENSOR REMOVAL/INSTALLATION.)	Yes	Clean input/turbine speed sensor, then go to Step 10.
		No	Go to next step.
7	**INSPECT PCM CONNECTOR FOR POOR CONNECTION** • Disconnect PCM connector. • Check for poor connection (damaged/pulled-out terminals, corrosion, etc.). • Is connection okay?	Yes	Go to next step.
		No	Repair or replace connector and/or terminals, then go to Step 10.
8	**INSPECT INPUT/TURBINE SPEED SENSOR CIRCUIT FOR OPEN** • Inspect input/turbine speed sensor terminals (harness-side) and PCM terminals (harness-side). — A and 3J — B and 3G • Is there continuity?	Yes	Go to next step.
		No	Repair or replace harness, then go to Step 10.
9	**INSPECT INPUT/TURBINE SPEED SENSOR CIRCUIT FOR SHORT TO GROUND** • Inspect input/turbine speed sensor terminal (harness-side) and body ground. — A and body ground — B and body ground • Is there continuity?	Yes	Repair or replace harness, then go to next step.
		No	Go to next step.
10	**VERIFY TROUBLESHOOTING OF DTC P0715 COMPLETED** • Make sure to reconnect all disconnected connectors. • Clear DTC from memory using WDS or equivalent. • Drive vehicle with vehicle speed **40 km/h {25 mph} or above** for **0.7 second or more**. • Is same DTC present?	Yes	Replace PCM, then go to next step. (See F–43 PCM REMOVAL/INSTALLATION.)
		No	Go to next step.
11	**VERIFY AFTER REPAIR PROCEDURE** • Perform “After Repair Procedure”. (See K–52 AFTER REPAIR PROCEDURE.) • Are any DTCs present?	Yes	Go to applicable DTC inspection.
		No	Troubleshooting completed.

K

DTC P0731

A6E567001030W13

DTC P0731	Gear 1 incorrect (Incorrect Gear Ratio Detected)
DETECTION CONDITION	• PCM monitors revolution ratio of forward clutch drum revolution to differential gear case revolution when the following monitoring conditions are met. If revolution ratio is **below 2.157**, PCM determines that there is malfunction. **Monitoring condition:** — ATF temperature **20 °C {68 °F} or above**. — Driving in 1GR in D range. — Engine run. — Turbine speed **within 225—4,988 rpm**. — Throttle opening angle **5.67% or above** — Differential gear case (output) revolution speed **35 rpm or above**. — Any of the following not generated: DTC P0500, P0706, P0707, P0708, P0712, P0713, P0715, P0751, P0752, P0753, P0756, P0757, P0758, P0761, P0762, P0763, P0766, P0767, P0768, P0771, P0772, P0773. **Diagnostic support note:** • This is a continuous monitor (CCM). • MIL does not illuminate. • HOLD indicator light flashes if PCM detects the above malfunction condition during first drive cycle. • FREEZE FRAME DATA is not available. • Pending code is not available. • DTC stored in the PCM memory.
POSSIBLE CAUSE	• ATF level low • Deteriorated ATF • Shift solenoid A stuck • Pressure control solenoid stuck • Line pressure low • One-way clutch slipping • Forward clutch slipping • Control valve stuck • Oil pump • PCM malfunction

Diagnostic procedure

STEP	INSPECTION		ACTION
1	**VERIFY RELATED REPAIR INFORMATION AVAILABILITY** • Check for related Service Bulletins availability. • Is any related repair information available?	Yes	Perform repair or diagnosis according to available repair information.
		No	Go to next step.
2	**CHECK ATF CONDITION** • Check ATF condition. (See K–12 AUTOMATIC TRANSAXLE FLUID (ATF) INSPECTION.) • Is it okay?	Yes	Go to next step.
		No	Replace ATF, then go to Step 8.
3	**CHECK ATF LEVEL** • Start engine. • Warm up ATX. • Is ATF level within specification? (See K–12 AUTOMATIC TRANSAXLE FLUID (ATF) INSPECTION.)	Yes	Go to next step.
		No	Adjust ATF level, then go to Step 8.
4	**INSPECT SHIFT SOLENOID VALVE A** • Perform inspection of operation. (See K–26 SOLENOID VALVE INSPECTION.) • Verify the click sound of shift solenoid A when applying B+ to transaxle connector terminal A. • Was click heard from solenoids?	Yes	Go to next step.
		No	Replace solenoid that you could not hear click sound, then go to Step 8. (See K–28 SOLENOID VALVE REMOVAL/ INSTALLATION.)
5	**INSPECT LINE PRESSURE** • Start engine. • Measure line pressures. **Specification** **Idle: 330—470 kPa {3.4—4.7 kgf/cm^2, 49—66 psi}** **Stall: 1,160—1,320 kPa {11.9—13.4 kgf/cm^2, 170—190 psi}** • Is line pressure within specification? (See K–6 Line Pressure Test.)	Yes	Go to next step.
		No	All ranges: Replace oil pump, then go to Step 8. Any ranges: Replace control valve body, then go to Step 8. (See K–34 CONTROL VALVE BODY REMOVAL, K–35 CONTROL VALVE BODY INSTALLATION.)

STEP	INSPECTION		ACTION
6	**INSPECT STALL SPEED** • Measure stall speed in D range. (See K–7 Stall Test.) **Specification** **2,000—2,600 rpm** • Is stall speed within specification?	Yes	Go to next step.
		No	Replace automatic transaxle, then go to Step8. (See K–29 AUTOMATIC TRANSAXLE REMOVAL/ INSTALLATION.)
7	**INSPECT FREQUENCY OF INPUT/TURBINE SPEED SENSOR WHEN DRIVING VEHICLE** • Turn ignition key to OFF. • Connect WDS or equivalent. • Start engine. • Measure frequency of input/turbine speed sensor while driving vehicle under the following conditions: — Vehicle speed (VSS PID): **20 km/h {12 mph}** — Drive in D range, 1st gear — Throttle opening angle (TP PID): **about 25%** • Was frequency of input/turbine speed sensor at **approx. 1,100 Hz**?	Yes	Go to next step.
		No	Replace control valve body, then go to next step. (See K–34 CONTROL VALVE BODY REMOVAL, K–35 CONTROL VALVE BODY INSTALLATION.)
8	**VERIFY REPAIR OF DTC P0731** • Make sure to reconnect all disconnected connectors. • Clear DTC using WDS or equivalent. • Start engine. • Warm up transaxle. • Drive vehicle under the following conditions at least 4 times for **more than 1 second**. — ATF temperature: **20 °C {68 °F} or above** — Drive in D range, 1st gear — Throttle opening angle (TP PID): **5.67% or above** — Vehicle speed (VSS PID): **4 km/h {3 mph} or above** • Are any DTCs present?	Yes	Replace PCM, then go to next step.
		No	Go to next step.
9	**VERIFY AFTER REPAIR PROCEDURE** • Perform “After Repair Procedure”. (See K–52 AFTER REPAIR PROCEDURE.) • Are any DTCs present?	Yes	Go to applicable DTC inspection.
		No	Troubleshooting completed.

K

DTC P0732

A6E567001030W14

DTC P0732	Gear 2 incorrect (Incorrect Gear Ratio Detected)
DETECTION CONDITION	• PCM monitors revolution ratio of forward clutch drum revolution to differential gear case revolution when the following monitoring conditions are met. If revolution ratio is **below 1.249 or above 2.157**, PCM determines that there is malfunction. **Monitoring condition:** — ATF temperature **20 °C {68 °F} or above**. — Driving in 2 GR in D range. — Engine run. — Turbine speed **within 225—4,988 rpm**. — Differential gear case (output) revolution speed **35 rpm or above**. — Any of the following not generated: DTC P0500, P0706, P0707, P0708, P0712, P0713, P0715, P0751, P0752, P0753, P0756, P0757, P0758, P0761, P0762, P0763, P0766, P0767, P0768, P0771, P0772, P0773. **Diagnostic support note:** • This is a continuous monitor (CCM). • MIL does not illuminate. • HOLD indicator light flashes if PCM detects the above malfunction condition during first drive cycle. • FREEZE FRAME DATA is not available. • Pending code is not available. • DTC stored in the PCM memory.

DTC P0732	Gear 2 incorrect (Incorrect Gear Ratio Detected)
POSSIBLE CAUSE	• ATF level low • Deteriorated ATF • Shift solenoids A, B or C stuck • Pressure control solenoid stuck • Line pressure low • 2-4 brake band slipping • Forward clutch slipping • Control valve stuck • Oil pump • PCM malfunction

Diagnostic procedure

STEP	INSPECTION		ACTION
1	**VERIFY RELATED REPAIR INFORMATION AVAILABILITY** • Check for related Service Bulletins availability. • Is any related repair information available?	Yes	Perform repair or diagnosis according to available repair information.
		No	Go to next step.
2	**CHECK ATF CONDITION** • Check ATF condition. (See K–12 AUTOMATIC TRANSAXLE FLUID (ATF) INSPECTION.) • Is it okay?	Yes	Go to next step.
		No	Replace ATF, then go to Step 8.
3	**CHECK ATF LEVEL** • Start engine. • Warm up ATX. • Is ATF level within specification? (See K–12 AUTOMATIC TRANSAXLE FLUID (ATF) INSPECTION.)	Yes	Go to next step.
		No	Adjust ATF level, then go to Step 8.
4	**INSPECTION SHIFT SOLENOID VALVE A, B AND C FOR CLICK SOUND** • Perform inspection of operation. (See K–26 SOLENOID VALVE INSPECTION.) • Verify the click sound of shift solenoid A, B, and C when applying B+ to each transaxle connector terminal. • Was click heard from solenoids?	Yes	Go to next step.
		No	Replace solenoid that you could not hear click sound, then go to Step 8. (See K–28 SOLENOID VALVE REMOVAL/ INSTALLATION.)
5	**INSPECT LINE PRESSURE** • Start engine. • Measure line pressures. **Specification** **Idle: 330—470 kPa {3.4—4.7 kgf/cm^2, 49—66 psi}** **Stall: 1,160—1,320 kPa {11.9—13.4 kgf/cm^2, 170—190 psi}** • Is line pressure within specification? (See K–6 Line Pressure Test.)	Yes	Go to next step.
		No	All ranges: Replace oil pump, then go to Step 8. Any ranges: Replace control valve body, then go to Step 8. (See K–34 CONTROL VALVE BODY REMOVAL, K–35 CONTROL VALVE BODY INSTALLATION.)
6	**INSPECT STALL SPEED** • Measure stall speed in D range. (See K–7 Stall Test.) **Specification** **2,000—2,600 rpm** • Is stall speed within specification?	Yes	Go to next step.
		No	Replace automatic transaxle, then go to Step8. (See K–29 AUTOMATIC TRANSAXLE REMOVAL/ INSTALLATION.)
7	**INSPECT FREQUENCY OF INPUT/TURBINE SPEED SENSOR WHEN DRIVING VEHICLE** • Turn ignition key to OFF. • Connect WDS or equivalent. • Start engine. • Measure frequency of input/turbine speed sensor while driving vehicle under the following conditions: — Vehicle speed: **40 km/h {24 mph}** (VSS PID) — Drive in D range, 2nd gear — Throttle opening angle: **about 25% (TP PID)** • Was frequency of input/turbine speed sensor at **approx. 1,156 Hz**?	Yes	Go to next step.
		No	Replace control valve body, then go to next step. (See K–34 CONTROL VALVE BODY REMOVAL, K–35 CONTROL VALVE BODY INSTALLATION.)

STEP	INSPECTION		ACTION
8	**VERIFY REPAIR OF DTC P0732** • Make sure to reconnect all disconnected connectors. • Clear DTC using WDS or equivalent. • Start engine. • Warm up transaxle. • Drive vehicle under the following conditions at least 4 times for **more than 1 seconds**. — ATF temperature: **20 °C {68 °F} or above** — Drive in D range, 2nd gear — Vehicle speed (VSS PID): **3.8 km/h {2.4 mph} or above** • Are any DTCs present?	Yes	Replace PCM, then go to next step.
		No	Go to next step.
9	**VERIFY AFTER REPAIR PROCEDURE** • Perform “After Repair Procedure”. (See K–52 AFTER REPAIR PROCEDURE.) • Are any DTCs present?	Yes	Go to applicable DTC inspection.
		No	Troubleshooting completed.

DTC P0733

A6E567001030W15

K

DTC P0733	Gear 3 incorrect (Incorrect Gear Ratio Detected)
DETECTION CONDITION	• PCM monitors revolution ratio of forward clutch drum revolution to differential gear case revolution when the following monitoring conditions are met. If revolution ratio is **below 0.863 or above 1.249**, PCM determines that there is malfunction. **Monitoring condition:** — ATF temperature **20 °C {68 °F} or above**. — Driving in 3 GR in D range. — Engine run. — Turbine speed **within 225—4,988 rpm**. — Differential gear case (output) revolution speed **35 rpm or above**. — Any of the following not generated: DTC P0500, P0706, P0707, P0708, P0712, P0713, P0715, P0751, P0752, P0753, P0756, P0757, P0758, P0761, P0762, P0763, P0766, P0767, P0768, P0771, P0772, P0773. **Diagnostic support note:** • This is a continuous monitor (CCM). • MIL does not illuminate. • HOLD indicator light flashes if PCM detects the above malfunction condition during first drive cycle. • FREEZE FRAME DATA is not available. • Pending code is not available. • DTC stored in the PCM memory.
POSSIBLE CAUSE	• ATF level low • Deteriorated ATF • Shift solenoids A or C stuck • Pressure control solenoid stuck • Line pressure low • 3-4 clutch slipping • Forward clutch slipping • Control valve stuck (Bypass, TCC or 3-4 shift valve) • Oil pump • PCM malfunction

Diagnostic procedure

STEP	INSPECTION		ACTION
1	**VERIFY RELATED REPAIR INFORMATION AVAILABILITY** • Check for related Service Bulletins availability. • Is any related repair information available?	Yes	Perform repair or diagnosis according to available repair information.
		No	Go to next step.
2	**CHECK ATF CONDITION** • Check ATF condition. (See K–12 AUTOMATIC TRANSAXLE FLUID (ATF) INSPECTION.) • Is it okay?	Yes	Go to next step.
		No	Replace ATF, then go to Step 8.

STEP	INSPECTION		ACTION
3	**CHECK ATF LEVEL** • Start engine. • Warm up ATX. • Is ATF level within specification? (See K–12 AUTOMATIC TRANSAXLE FLUID (ATF) INSPECTION.)	Yes	Go to next step.
		No	Adjust ATF level, then go to Step 8.
4	**INSPECTION SHIFT SOLENOID VALVE A AND C FOR CLICK SOUND** • Perform inspection of operation. (See K–26 SOLENOID VALVE INSPECTION.) • Verify the click sound of shift solenoid A and C when applying B+ to each transaxle connector terminal. • Was click heard from solenoids?	Yes	Go to next step.
		No	Replace solenoid that you could not hear click sound, then go to Step 8. (See K–28 SOLENOID VALVE REMOVAL/INSTALLATION.)
5	**INSPECT LINE PRESSURE** • Start engine. • Measure line pressures. **Specification** **Idle: 330—470 kPa {3.4—4.7 kgf/cm^2, 49—66 psi}** **Stall: 1,160—1,320 kPa {11.9—13.4 kgf/cm^2, 170—190 psi}** • Is line pressure within specification? (See K–6 Line Pressure Test.)	Yes	Go to next step.
		No	All ranges: Replace oil pump, then go to Step 8. Any ranges: Replace control valve body, then go to Step 8. (See K–34 CONTROL VALVE BODY REMOVAL, K–35 CONTROL VALVE BODY INSTALLATION.)
6	**INSPECT STALL SPEED** • Measure stall speed in D range. (See K–7 Stall Test.) **Specification** **2,000—2,600 rpm** • Is stall speed within specification?	Yes	Go to next step.
		No	Replace automatic transaxle, then go to Step 8. (See K–29 AUTOMATIC TRANSAXLE REMOVAL/INSTALLATION.)
7	**INSPECT FREQUENCY OF INPUT/TURBINE SPEED SENSOR WHEN DRIVING VEHICLE** • Turn ignition key to OFF. • Connect WDS or equivalent. • Start engine. • Measure frequency of input/turbine speed sensor while driving vehicle under the following conditions: — Vehicle speed (VSS PID): **60 km/h {37 mph}** — Drive in D range, 3rd gear — Throttle opening angle (TP PID): **about 25%** • Was frequency of input/turbine speed sensor at **approx. 1,200 Hz**?	Yes	Go to next step.
		No	Replace control valve body, then go to next step. (See K–34 CONTROL VALVE BODY REMOVAL, K–35 CONTROL VALVE BODY INSTALLATION.)
8	**VERIFY REPAIR OF DTC P0733** • Make sure to reconnect all disconnected connectors. • Clear DTC using WDS or equivalent. • Start engine. • Warm up transaxle. • Drive vehicle under the following conditions for **more than 2 seconds**. — ATF temperature: **20 °C {68 °F} or above** — Drive in D range, 3rd gear — Vehicle speed (VSS PID): **4 km/h {3 mph} or above** • Are any DTCs present?	Yes	Replace PCM, then go to next step.
		No	Go to next step.
9	**VERIFY AFTER REPAIR PROCEDURE** • Perform “After Repair Procedure”. (See K–52 AFTER REPAIR PROCEDURE.) • Are any DTCs present?	Yes	Go to applicable DTC inspection.
		No	Troubleshooting completed.

DTC P0734

A6E567001030W16

DTC P0734	Gear 4 incorrect (Incorrect Gear Ratio Detected)
DETECTION CONDITION	• PCM monitors revolution ratio of forward clutch drum revolution to differential gear case revolution when the following monitoring conditions are met. If revolution ratio is **below 0.6 or above 1.249**, PCM determines that there is malfunction. **Monitoring condition:** — ATF temperature **20 °C {68 °F} or above**. — Driving in 4 GR in D range. — Engine run. — Turbine speed **within 225—4,988 rpm**. — Vehicle speed **50 km/h {31 mph} or above**. — Closed throttle position. — Differential gear case (output) revolution speed **35 rpm or above**. — Any of the following not generated: DTC P0500, P0706, P0707, P0708, P0712, P0713, P0715, P0751, P0752, P0753, P0756, P0757, P0758, P0761, P0762, P0763, P0766, P0767, P0768, P0771, P0772, P0773. **Diagnostic support note:** • This is a continuous monitor (CCM). • MIL does not illuminate. • HOLD indicator light flashes if PCM detects the above malfunction condition during first drive cycle. • FREEZE FRAME DATA is not available. • Pending code is not available. • DTC stored in the PCM memory.
POSSIBLE CAUSE	• ATF level low • Deteriorated ATF • Shift solenoids A, B or C stuck • Pressure control solenoid stuck • Line pressure low • 2-4 brake band slipping • 3-4 clutch slipping • Forward clutch slipping • Control valve stuck (Bypass or 3-4 shift valve) • Oil pump • PCM malfunction

Diagnostic procedure

STEP	INSPECTION		ACTION
1	**VERIFY RELATED REPAIR INFORMATION AVAILABILITY** • Check for related Service Bulletins availability. • Is any related repair information available?	Yes	Perform repair or diagnosis according to available repair information.
		No	Go to next step.
2	**CHECK ATF CONDITION** • Check ATF condition. (See K–12 AUTOMATIC TRANSAXLE FLUID (ATF) INSPECTION.) • Is it okay?	Yes	Go to next step.
		No	Replace ATF, then go to Step 8.
3	**CHECK ATF LEVEL** • Start engine. • Warm up ATX. • Is ATF level within specification? (See K–12 AUTOMATIC TRANSAXLE FLUID (ATF) INSPECTION.)	Yes	Go to next step.
		No	Adjust ATF level, then go to Step 8.
4	**INSPECT SHIFT SOLENOID VALVE A AND D FOR CLICK SOUND** • Perform inspection of operation. (See K–26 SOLENOID VALVE INSPECTION.) • Verify the click sound of shift solenoids A and D when applying B+ to each transaxle connector terminal. **Note** • Click from solenoid D is barely audible. Remove solenoids to correctly inspect if necessary. • Was click heard from solenoids?	Yes	Go to next step.
		No	Replace solenoid that you could not hear click sound, then go to Step 8. (See K–28 SOLENOID VALVE REMOVAL/ INSTALLATION.)

STEP	INSPECTION		ACTION
5	**INSPECT LINE PRESSURE** • Start engine. • Measure line pressures. **Specification** **Idle: 330—470 kPa {3.4—4.7 kgf/cm^2, 49—66 psi}** **Stall: 1,160—1,320 kPa {11.9—13.4 kgf/cm^2, 170—190 psi}** • Is line pressure within specification? (See K–6 Line Pressure Test.)	Yes	Go to next step.
		No	All ranges: Replace oil pump, then go to Step 8. Any ranges: Replace control valve body, then go to Step 8. (See K–34 CONTROL VALVE BODY REMOVAL, K–35 CONTROL VALVE BODY INSTALLATION.)
6	**INSPECT STALL SPEED** • Measure stall speed in D range. (See K–7 Stall Test.) **Specification** **2,000—2,600 rpm** • Is stall speed within specification?	Yes	Go to next step.
		No	Replace automatic transaxle, then go to Step 8. (See K–29 AUTOMATIC TRANSAXLE REMOVAL/ INSTALLATION.)
7	**INSPECT FREQUENCY OF INPUT/TURBINE SPEED SENSOR WHEN DRIVING VEHICLE** • Turn ignition key to OFF. • Connect WDS or equivalent. • Start engine. • Measure frequency of input/turbine speed sensor while driving vehicle under the following conditions: — Vehicle speed (VSS PID): **80 km/h {49 mph}** — Drive in D range, 4th gear — Throttle opening angle (TP PID): **about 25%** • Was frequency of input/turbine speed sensor at **approx. 1,200 Hz**?	Yes	Go to next step.
		No	Replace control valve body, then go to next step. (See K–34 CONTROL VALVE BODY REMOVAL, K–35 CONTROL VALVE BODY INSTALLATION.)
8	**VERIFY REPAIR OF DTC P0734** • Make sure to reconnect all disconnected connectors. • Clear DTC using WDS or equivalent. • Start engine. • Warm up transaxle. • Drive vehicle under the following conditions for **more than 5 seconds**. — ATF temperature: **20 °C {68 °F} or above** — Drive in D range, 4th gear — Throttle opening angle (TP PID): **0%** — Vehicle speed (VSS PID): **50 km/h {31 mph} or above** • Are any DTCs present?	Yes	Replace PCM, then go to next step.
		No	Go to next step.
9	**VERIFY AFTER REPAIR PROCEDURE** • Are any DTCs present? • Perform “After Repair Procedure”. (See K–52 AFTER REPAIR PROCEDURE.)	Yes	Go to applicable DTC inspection.
		No	Troubleshooting completed.

DTC P0741

A6E567001030W17

DTC P0741	Torque converter clutch (TCC) stuck OFF
DETECTION CONDITION	• When all conditions below satisfied. — ATF temperature **20 °C {68 °F} or above**. — Driving in 4GR at D range. — Engine run. — Turbine speed **within 225—4,988 rpm**. — Vehicle speed **within 60—100 km/h {37—62 mph}**. — TCC operation — Shift solenoid A duty value exceeds **99%** — Power or normal mode — Difference between engine speed and turbine speed **more than 100 rpm** — Any of the following not generated: DTC P0500, P0706, P0707, P0708, P0712, P0713, P0715, P0751, P0752, P0753, P0756, P0757, P0758, P0761, P0762, P0763, P0766, P0767, P0768, P0771, P0772, P0773. **Diagnostic support note:** • This is a continuous monitor (CCM). • MIL does not illuminate if PCM detects the above malfunction conditions during first drive cycle. • PENDING CODE is not available. • FREEZE FRAME DATA is not available. • HOLD indicator light flashes. • DTC is stored in the PCM memory.
POSSIBLE CAUSE	• ATF level low • Deteriorated ATF • Shift solenoids A, B, C, D, E, and pressure control solenoid stuck • Line pressure low • 2-4 brake band slipping • 3-4 clutch slipping • Control valve stuck. • PCM malfunction

Diagnostic procedure

STEP	INSPECTION		ACTION
1	**VERIFY RELATED REPAIR INFORMATION AVAILABILITY** • Check for related Service Bulletins availability. • Is any related repair information available?	Yes	Perform repair or diagnosis according to available repair information. • If vehicle is not repaired, go to next step.
		No	Go to next step.
2	**CHECK ATF CONDITION** • Turn ignition key to OFF. • Check ATF condition. — Clear red: Normal — Milky: Water mixed in fluid — Reddish brown: Deteriorated ATF • Is it okay? (See K–12 Automatic Transaxle Fluid (ATF) Condition Inspection.)	Yes	Go to next step.
		No	If ATF color milky or reddish brown, replace ATF, then go to Step 4. (See K–13 AUTOMATIC TRANSAXLE FLUID (ATF) REPLACEMENT.)
3	**CHECK ATF LEVEL** • Start engine. • Warm up ATX. • Is ATF level within specification? (See K–12 Automatic Transaxle Fluid (ATF) Level Inspection.)	Yes	Go to next step.
		No	Adjust ATF level, then go to Step 6. (See K–12 Automatic Transaxle Fluid (ATF) Level Inspection.)
4	**INSPECT LINE PRESSURE** • Start engine. • Measure line pressure. **Specification** **Idle: 330—470 kPa {3.4—4.7 kgf/cm^2, 49—66 psi}** **Stall: 1,160—1,320 kPa {11.9—13.4 kgf/cm^2, 170—190 psi}** • Is line pressure within specification? (See K–6 Line Pressure Test.)	Yes	Go to next step.
		No	• All ranges: Replace oil pump or control valve body, then go to Step 6. • Any ranges: Replace ATX, then go to Step 6. (See K–29 AUTOMATIC TRANSAXLE REMOVAL/INSTALLATION.) (See ATX Workshop Manual FN4A-EL (9999-95-FN4A-99).)

STEP	INSPECTION		ACTION
5	**CHECK OPERATION OF EACH VALVE AND EACH SPRING** • Turn ignition key to OFF. • Remove control valve body. • Disassemble control valve body. • Is each valve operation okay and is return spring okay? (See K–34 CONTROL VALVE BODY REMOVAL, K–35 CONTROL VALVE BODY INSTALLATION.) (See ATX Workshop Manual FN4A-EL (9999-95-FN4A-99).)	Yes	Replace ATX, then go to next step (See ATX Workshop Manual FN4A-EL (9999-95-FN4A-99).)
		No	Repair or replace shift valve and return spring, then go to next step. (See K–34 CONTROL VALVE BODY REMOVAL, K–35 CONTROL VALVE BODY INSTALLATION.) (See ATX Workshop Manual FN4A-EL (9999-95-FN4A-99).)
6	**VERIFY TROUBLESHOOTING OF DTC P0741 COMPLETED** • Make sure to reconnect all disconnected connectors. • Clear DTC from memory using WDS or equivalent. • Start engine. • Warm up engine and ATX. • Drive vehicle under following conditions for **5 seconds or more**. — ATF temperature: **20 °C {68 °F} or above** — Drive in D range, 4th gear (TCC operation) — Vehicle speed (VSS PID): **within 60—100 km/h {37—62 mph}** • Are any DTCs present?	Yes	Replace PCM, then go to next step. (See F–43 PCM REMOVAL/INSTALLATION.)
		No	Go to next step.
7	**VERIFY AFTER REPAIR PROCEDURE** • Perform “After Repair Procedure”. (See K–52 AFTER REPAIR PROCEDURE.) • Are any DTCs present?	Yes	Go to applicable DTC inspection.
		No	Troubleshooting completed.

DTC P0742

A6E567001030W18

DTC P0742	Torque converter clutch (TCC) stuck ON
DETECTION CONDITION	• All of following conditions satisfied under each of following throttle conditions. — ATF temperature **20 °C {68 °F} or above**. — Driving in 4GR at D range. — Engine run. — Turbine speed **within 225—4,988 rpm**. — Vehicle speed **below 70 km/h {43 mph}**. — Torque converter clutch (TCC) no operation — Difference between engine speed and turbine speed **below 50 rpm** — DTC P0734 not output • Throttle conditions. — Throttle opening angle (TP PID) **above 10.1%** and **5 seconds or more** have passed. — Throttle opening angle (TP PID) **within 3.1—10.1%** and **3 seconds or more** have passed. — Throttle opening angle at closed throttle position and **5 seconds or more** have passed. **Diagnostic support note:** • This is a continuous monitor (CCM). • MIL does not illuminate if PCM detects the above malfunction conditions during first drive cycle. • PENDING CODE is not available. • FREEZE FRAME DATA is not available. • HOLD indicator light flashes. • DTC is stored in the PCM memory.
POSSIBLE CAUSE	• ATF level low • Deteriorated ATF • Shift solenoids A, B, C, D, E, and pressure control solenoid stuck • Line pressure low • 2-4 brake band slipping • 3-4 clutch slipping • Control valve stuck • PCM malfunction

Diagnostic procedure

STEP	INSPECTION		ACTION
1	**VERIFY RELATED REPAIR INFORMATION AVAILABILITY** • Check for related Service Bulletins availability. • Is any related repair information available?	Yes	Perform repair or diagnosis according to available repair information. • If vehicle is not repaired, go to next step.
		No	Go to next step.
2	**CHECK ATF CONDITION** • Turn ignition key to OFF. • Check ATF condition. — Clear red: Normal — Milky: Water mixed in fluid — Reddish brown: Deteriorated ATF • Is it okay? (See K–12 Automatic Transaxle Fluid (ATF) Condition Inspection.)	Yes	Go to next step.
		No	If ATF color milky or reddish brown, replace ATF, then go to Step 4. (See K–13 AUTOMATIC TRANSAXLE FLUID (ATF) REPLACEMENT.)
3	**CHECK ATF LEVEL** • Start engine. • Warm up ATX. • Is ATF level within specification? (See K–12 Automatic Transaxle Fluid (ATF) Level Inspection.)	Yes	Go to next step.
		No	Adjust ATF level, then go to Step 6. (See K–12 Automatic Transaxle Fluid (ATF) Level Inspection.)
4	**INSPECT LINE PRESSURE** • Start engine. • Measure line pressure. **Specification** **Idle: 330—470 kPa {3.4—4.7 kgf/cm^2, 49—66 psi}** **Stall: 1,160—1,320 kPa {11.9—13.4 kgf/cm^2, 170—190 psi}** • Is line pressure within specification? (See K–6 Line Pressure Test.)	Yes	Go to next step.
		No	• All ranges: Replace oil pump or control valve body, then go to Step 6. • Any ranges: Replace ATX, then go to Step 6. (See K–29 AUTOMATIC TRANSAXLE REMOVAL/INSTALLATION.) (See ATX Workshop Manual FN4A-EL (9999-95-FN4A-99).)
5	**CHECK OPERATION OF EACH VALVE AND EACH SPRING** • Turn ignition key to OFF. • Remove control valve body. • Disassemble control valve body. • Is each valve operation okay and is return spring okay? (See K–34 CONTROL VALVE BODY REMOVAL, K–35 CONTROL VALVE BODY INSTALLATION.) (See ATX Workshop Manual FN4A-EL (9999-95-FN4A-99).)	Yes	Replace ATX, then go to next step. (See K–29 AUTOMATIC TRANSAXLE REMOVAL/INSTALLATION.) (See ATX Workshop Manual FN4A-EL (9999-95-FN4A-99).)
		No	Repair or replace shift valve and return spring, then go to next step. (See K–34 CONTROL VALVE BODY REMOVAL, K–35 CONTROL VALVE BODY INSTALLATION.) (See ATX Workshop Manual FN4A-EL (9999-95-FN4A-99).)
6	**VERIFY TROUBLESHOOTING OF DTC P0742 COMPLETED** • Make sure to reconnect all disconnected connectors. • Clear DTC from memory using WDS or equivalent. • Start engine. • Warm up engine and ATX. • Drive vehicle under following. — ATF temperature: **20 °C {68 °F} or above** — Drive in D range, 4th gear (TCC not in operation) — Vehicle speed: **below 70 km/h {43 mph}**. • Throttle conditions — Throttle opening angle (TP PID) **above 10.1%** and **5 seconds or more** have passed. — Throttle opening angle (TP PID) **within 3.1—10.1%** and **3 seconds or more** have passed. — Throttle opening angle at closed throttle position and **5 seconds or more** have passed. • Are any DTCs present?	Yes	Replace PCM, then go to next step. (See F–43 PCM REMOVAL/INSTALLATION.)
		No	Go to next step.

K

STEP	INSPECTION		ACTION
7	**VERIFY AFTER REPAIR PROCEDURE** • Perform “After Repair Procedure”. (See K–52 AFTER REPAIR PROCEDURE.) • Are any DTCs present?	Yes	Go to applicable DTC inspection.
		No	Troubleshooting completed.

DTC P0745

A6E567001030W19

DTC P0745	Pressure control solenoid malfunction
DETECTION CONDITION	• If PCM detects either of following conditions, PCM determines that pressure control solenoid circuit has a malfunction — Pressure control solenoid voltage stuck **0 V** after engine start — Pressure control solenoid voltage stuck **B+** after engine start **Diagnostic support note:** • This is a continuous monitor (CCM). • MIL does not illuminate if PCM detects above malfunction conditions during first drive cycle. • PENDING CODE is not available. • FREEZE FRAME DATA is not available. • HOLD indicator light flashes. • DTC is stored in the PCM memory.
POSSIBLE CAUSE	• Pressure control solenoid malfunction • Open circuit between pressure control solenoid terminal B and ATX connector terminal I • Open circuit between ATX connector terminal I and PCM terminal 3V • Short to ground between ATX connector terminal D and PCM terminal 3Y • Short to power between ATX connector terminal D and PCM terminal 3Y • Open circuit between pressure control solenoid terminal A and ATX connector terminal D • Open circuit between ATX connector terminal D and PCM terminal 3Y • Damaged connector between pressure control solenoid and PCM • PCM malfunction

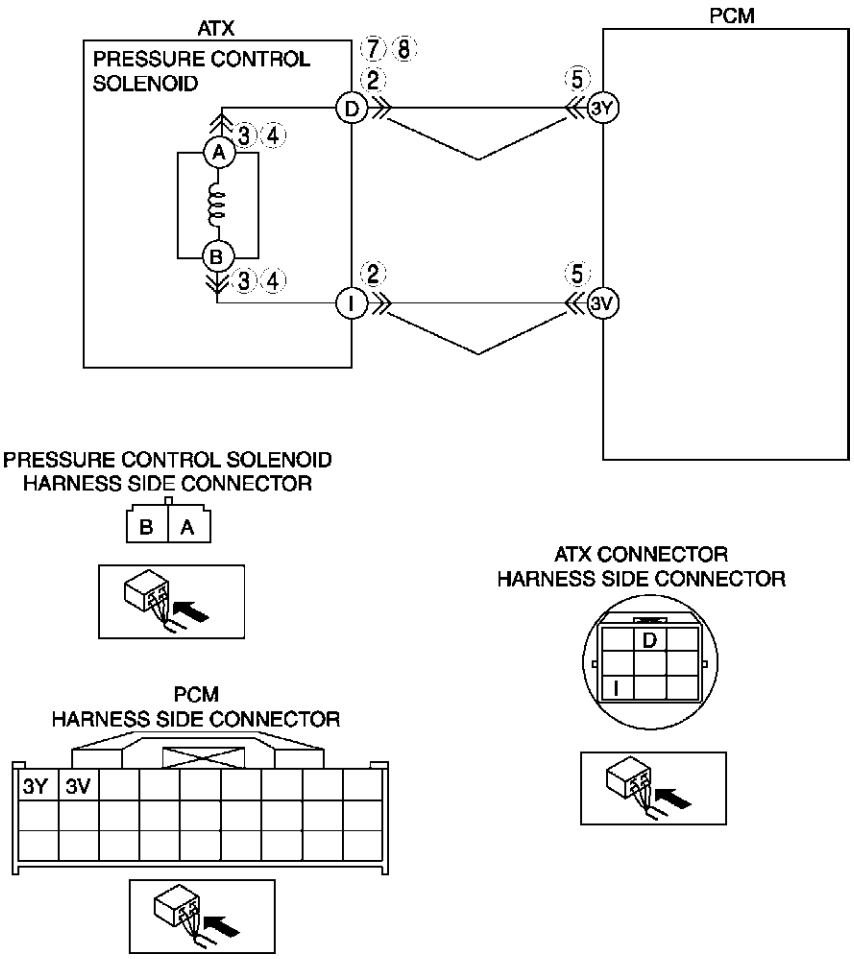

Diagnostic procedure

STEP	INSPECTION		ACTION
1	**VERIFY RELATED REPAIR INFORMATION AVAILABILITY** • Check for related Service Bulletins availability. • Is any related repair information available?	Yes	Perform repair or diagnosis according to available repair information. • If vehicle is not repaired, go to next step.
		No	Go to next step.
2	**INSPECT ATX CONNECTOR FOR POOR CONNECTION** • Turn ignition key to OFF. • Disconnect ATX connector. • Check for poor connection (damaged/pulled-out terminal, corrosion, etc.). • Is connection okay?	Yes	Go to next step.
		No	Repair or replace connector and/or terminals, then go to Step 10.
3	**INSPECT RESISTANCE** • Inspect resistance between ATX connector (transaxle case side) terminals D and I. • Is resistance **within 2.4—7.3 ohms**? (See K–26 Resistance Inspection (On-Vehicle Inspection).)	Yes	Go to Step 6.
		No	Go to next step.
4	**INSPECT PRESSURE CONTROL SOLENOID CONNECTOR FOR POOR CONNECTION** • Disconnect pressure control solenoid connector. • Check for poor connection (damaged/pulled-out terminal, corrosion, etc.). • Is connection okay?	Yes	Go to next step.
		No	Repair or replace connector and/or terminals, then go to Step 10.
5	**INSPECT RESISTANCE** • Inspect resistance between pressure control solenoid terminals A and B. • Is resistance **within 2.4—7.3 ohms**? (See K–27 Resistance Inspection (Off-Vehicle Inspection).)	Yes	Replace solenoid harness, then go to Step 10.
		No	Verify pressure control solenoid installation. • If solenoid installed correctly, replace pressure control solenoid, then go to Step 10. (See K–28 SOLENOID VALVE REMOVAL/INSTALLATION.)
6	**INSPECT PCM CONNECTOR FOR POOR CONNECTION** • Disconnect PCM connector. • Check for poor connection (damaged/pulled-out terminals, corrosion, etc.). • Is connection okay?	Yes	Go to next step.
		No	Repair or replace connector and/or terminals, then go to Step 10.
7	**INSPECT ATX CONNECTOR CIRCUIT FOR OPEN** • Inspect for continuity between PCM (harness-side) and ATX connector (vehicle harness-side). — PCM terminal 3Y and ATX connector terminal D — PCM terminal 3V and ATX connector terminal I • Is there continuity between terminals?	Yes	Go to next step.
		No	Repair or replace harness, the go to Step 10.
8	**INSPECT ATX CONNECTOR CIRCUIT FOR SHORT TO POWER** • Turn ignition key to ON (engine OFF). • Inspect voltage at ATX connector terminal D (vehicle harness-side). • Is voltage **0 V**?	Yes	Go to next step.
		No	Repair or replace harness, then go to Step 10.
9	**INSPECT PCM CIRCUIT FOR SHORT TO GROUND** • Turn ignition key to OFF. • Inspect for continuity between ATX connector terminal D (harness-side) and body ground. • Is there continuity?	Yes	Repair or replace harness, then go to next step.
		No	Go to next step.

K

STEP	INSPECTION		ACTION
10	**VERIFY TROUBLESHOOTING OF DTC P0745 COMPLETED** • Make sure to reconnect all disconnected connectors. • Clear DTC from memory using WDS or equivalent. • Make sure to wait **more than 1 second** after turning ignition key to ON. • Are any DTCs present?	Yes	Replace PCM, then go to next step. (See F–43 PCM REMOVAL/INSTALLATION.)
		No	No concern is detected. Go to next step.
11	**VERIFY AFTER REPAIR PROCEDURE** • Perform “After Repair Procedure”. (See K–52 AFTER REPAIR PROCEDURE.) • Are any DTCs present?	Yes	Go to applicable DTC inspection.
		No	Troubleshooting completed.

DTC P0751

A6E567001030W20

DTC P0751	Shift solenoid A stuck OFF
DETECTION CONDITION	• When any of P0731, P0732, and P0733 are not generated, and all conditions below satisfied. — ATF temperature **20 °C {68 °F} or above**. — Driving in 4GR at D range. — Engine run. — Turbine speed **within 225— 4,988 rpm**. — Differential gear case (output) revolution speed **35 rpm or above**. — Torque converter clutch (TCC) not operating — Revolution ratio of forward clutch drum revolution to differential gear case revolution **within 0.91—1.09**. — Any of the following not generated: DTC P0500, P0706, P0707, P0708, P0712, P0713, P0715, P0751, P0752, P0753, P0756, P0757, P0758, P0761, P0762, P0763, P0766, P0767, P0767, P0768, P0771, P0772, P0773. **Diagnostic support note:** • This is a continuous monitor (CCM). • MIL illuminates if PCM detects the above malfunction condition in two consecutive drive cycles or in one drive cycle while the DTC for the same malfunction has been stored in the PCM. • PENDING CODE is available if PCM detects the above malfunction condition during first drive cycle. • FREEZE FRAME DATA is available. • HOLD indicator light flashes. • DTC is stored in the PCM memory.
POSSIBLE CAUSE	• ATF level low • Deteriorated ATF • Shift solenoid A stuck • Control valve stuck • PCM malfunction

Diagnostic procedure

STEP	INSPECTION		ACTION
1	**VERIFY FREEZE FRAME DATA HAS BEEN RECORDED** • Has FREEZE FRAME PID DATA been recorded?	Yes	Go to next step.
		No	Record FREEZE FRAME PID DATA on repair order, then go to next step.
2	**VERIFY RELATED REPAIR INFORMATION AVAILABILITY** • Check for related Service Bulletins availability. • Is any related repair information available?	Yes	Perform repair or diagnosis according to available repair information. • If vehicle is not repaired, go to next step.
		No	Go to next step.
3	**CHECK ATF CONDITION** • Turn ignition key to OFF. • Check ATF condition. — Clear red: Normal — Milky: Water mixed in fluid — Reddish brown: Deteriorated ATF • Is it okay? (See K–12 Automatic Transaxle Fluid (ATF) Condition Inspection.)	Yes	Go to next step.
		No	If ATF color milky or reddish brown, replace ATF, then go to Step 5. (See K–13 AUTOMATIC TRANSAXLE FLUID (ATF) REPLACEMENT.)
4	**CHECK ATF LEVEL** • Start engine. • Warm up ATX. • Is ATF level within specification? (See K–12 Automatic Transaxle Fluid (ATF) Level Inspection.)	Yes	Go to next step.
		No	Adjust ATF level, then go to Step 7. (See K–12 Automatic Transaxle Fluid (ATF) Level Inspection.)

STEP	INSPECTION		ACTION
5	**INSPECT LINE PRESSURE** • Start engine. • Measure line pressure. **Specification** **Idle: 330—470 kPa {3.4—4.7 kgf/cm^2, 49—66 psi}** **Stall: 1,160—1,320 kPa {11.9—13.4 kgf/cm^2, 170—190 psi}** • Is line pressure within specification? (See K–6 Line Pressure Test.)	Yes	Go to next step.
		No	• All ranges: Replace oil pump or control valve body, then go to Step 7. • Any ranges: Replace ATX, then go to Step 7. (See K–29 AUTOMATIC TRANSAXLE REMOVAL/INSTALLATION.) (See ATX Workshop Manual FN4A-EL (9999-95-FN4A-99).)
6	**CHECK OPERATION OF EACH VALVE AND EACH SPRING** • Turn ignition key to OFF. • Remove control valve body. • Disassemble control valve body. • Is each valve operation okay and is return spring okay? (See K–34 CONTROL VALVE BODY REMOVAL, K–35 CONTROL VALVE BODY INSTALLATION.) (See ATX Workshop Manual FN4A-EL (9999-95-FN4A-99).)	Yes	Replace ATX, then go to next step. (See K–29 AUTOMATIC TRANSAXLE REMOVAL/INSTALLATION.) (See ATX Workshop Manual FN4A-EL (9999-95-FN4A-99).)
		No	Repair or replace shift valve and return spring, then go to next step. (See K–34 CONTROL VALVE BODY REMOVAL, K–35 CONTROL VALVE BODY INSTALLATION.) (See ATX Workshop Manual FN4A-EL (9999-95-FN4A-99).)
7	**VERIFY TROUBLESHOOTING OF DTC P0751 COMPLETED** • Make sure to reconnect all disconnected connectors. • Clear DTC from memory using WDS or equivalent. • Start engine. • Warm up ATX. • Drive the vehicle under the following conditions and make sure that gears shift smoothly from 1GR to 4GR. — ATF temperature: **20 °C {68 °F} or above** — Drive in D range • Is pending code present?	Yes	Replace PCM, then go to next step. (See F–43 PCM REMOVAL/INSTALLATION.)
		No	Go to next step.
8	**VERIFY AFTER REPAIR PROCEDURE** • Perform “After Repair Procedure”. (See K–52 AFTER REPAIR PROCEDURE.) • Are any DTCs present?	Yes	Go to applicable DTC inspection.
		No	Troubleshooting completed.

DTC P0752

A6E567001030W21

DTC P0752	Shift solenoid A stuck ON
DETECTION CONDITION	• When P0734 is not generated, and all conditions below satisfied in 1GR and 2GR. — ATF temperature **20 °C {68 °F} or above**. — Engine run. — Either of P0705 or P0706 output, or D range is selected. — Brake pedal depressed. — Throttle opening angle closed throttle position. — Vehicle speed **0 km/h {0 mph}**. — Input/turbine speed sensor signal **187.5 rpm or above**. — Any of the following not generated: DTC P0500, P0706, P0707, P0708, P0712, P0713, P0715, P0751, P0752, P0753, P0756, P0757, P0758, P0761, P0762, P0763, P0766, P0767, P0767, P0768, P0771, P0772, P0773. **Diagnostic support note:** • This is a continuous monitor (CCM). • MIL illuminates if PCM detects the above malfunction condition in two consecutive drive cycles or in one drive cycle while the DTC for the same malfunction has been stored in the PCM. • PENDING CODE is available if PCM detects the above malfunction condition during first drive cycle. • FREEZE FRAME DATA is available. • HOLD indicator light flashes. • DTC is stored in the PCM memory.
POSSIBLE CAUSE	• ATF level low • Deteriorated ATF • Shift solenoid A stuck • Control valve stuck • PCM malfunction

Diagnostic procedure

STEP	INSPECTION		ACTION
1	**VERIFY FREEZE FRAME DATA HAS BEEN RECORDED** • Has FREEZE FRAME PID DATA been recorded?	Yes	Go to next step.
		No	Record FREEZE FRAME PID DATA on repair order, then go to next step.
2	**VERIFY RELATED REPAIR INFORMATION AVAILABILITY** • Check for related Service Bulletins availability. • Is any related repair information available?	Yes	Perform repair or diagnosis according to available repair information. • If vehicle is not repaired, go to next step.
		No	Go to next step.
3	**CHECK ATF CONDITION** • Turn ignition key to OFF. • Check ATF condition. — Clear red: Normal — Milky: Water mixed in fluid — Reddish brown: Deteriorated ATF • Is it okay? (See K–12 Automatic Transaxle Fluid (ATF) Condition Inspection.)	Yes	Go to next step.
		No	If ATF color milky or reddish brown, replace ATF, then go to Step 5. (See K–13 AUTOMATIC TRANSAXLE FLUID (ATF) REPLACEMENT.)
4	**CHECK ATF LEVEL** • Start engine. • Warm up ATX. • Is ATF level within specification? (See K–12 Automatic Transaxle Fluid (ATF) Level Inspection.)	Yes	Go to next step.
		No	Adjust ATF level, then go to Step 7. (See K–12 Automatic Transaxle Fluid (ATF) Level Inspection.)
5	**INSPECT LINE PRESSURE** • Start engine. • Measure line pressure. **Specification** **Idle: 330—470 kPa {3.4—4.7 kgf/cm^2, 49—66 psi}** **Stall: 1,200—1,360 kPa {12.3—13.8 kgf/cm^2, 175—196 psi}** • Is line pressure within specification? (See K–6 Line Pressure Test.)	Yes	Go to next step.
		No	• All ranges: Replace oil pump or control valve body, then go to Step 7. • Any ranges: Replace ATX, then go to Step 7. (See K–29 AUTOMATIC TRANSAXLE REMOVAL/INSTALLATION.) (See ATX Workshop Manual FN4A-EL (9999-95-FN4A-99).)
6	**CHECK OPERATION OF EACH VALVE AND EACH SPRING** • Turn ignition key to OFF. • Remove control valve body. • Disassemble control valve body. • Is each valve operation okay and is return spring okay? (See K–34 CONTROL VALVE BODY REMOVAL, K–35 CONTROL VALVE BODY INSTALLATION.) (See ATX Workshop Manual FN4A-EL (9999-95-FN4A-99).)	Yes	Replace ATX, then go to next step. (See K–29 AUTOMATIC TRANSAXLE REMOVAL/INSTALLATION.) (See ATX Workshop Manual FN4A-EL (9999-95-FN4A-99).)
		No	Repair or replace shift valve and return spring, then go to next step. (See K–34 CONTROL VALVE BODY REMOVAL, K–35 CONTROL VALVE BODY INSTALLATION.) (See ATX Workshop Manual FN4A-EL (9999-95-FN4A-99).)
7	**VERIFY TROUBLESHOOTING OF DTC P0752 COMPLETED** • Make sure to reconnect all disconnected connectors. • Clear DTC from memory using WDS or equivalent. • Start engine. • Warm up ATX. • Drive the vehicle under the following conditions and make sure that gears shift smoothly from 1GR to 4GR. — ATF temperature: **20 °C {68 °F} or above** — Drive in D range • Is pending code present?	Yes	Replace PCM, then go to next step. (See F–43 PCM REMOVAL/INSTALLATION.)
		No	Go to next step.
8	**VERIFY AFTER REPAIR PROCEDURE** • Perform “After Repair Procedure”. (See K–52 AFTER REPAIR PROCEDURE.) • Are any DTCs present?	Yes	Go to applicable DTC inspection.
		No	Troubleshooting completed.

DTC P0753

A6E567001030W22

DTC P0753	Shift solenoid A malfunction (electrical)
DETECTION CONDITION	• If PCM detects either of following conditions, PCM determines that shift solenoid A circuit has a malfunction: — Shift solenoid A voltage is stuck at **B+** after engine start. — Shift solenoid A voltage is stuck at **0 V** after engine start. **Diagnostic support note:** • This is a continuous monitor (CCM). • MIL illuminates if PCM detects the above malfunction conditions during first drive cycle. • PENDING CODE is not available. • FREEZE FRAME DATA is available. • HOLD indicator light flashes. • DTC is stored in the PCM memory.
POSSIBLE CAUSE	• Shift solenoid A malfunction • Short to ground between ATX connector terminal A and PCM terminal 4AB • Short to power between ATX connector terminal A and PCM terminal 4AB • Open circuit between shift solenoid A terminal B and ATX connector terminal A • Open circuit between ATX connector terminal A and PCM terminal 4AB • Open circuit between shift solenoid A terminal A and body ground point • Damaged connector between shift solenoid A and PCM • PCM malfunction

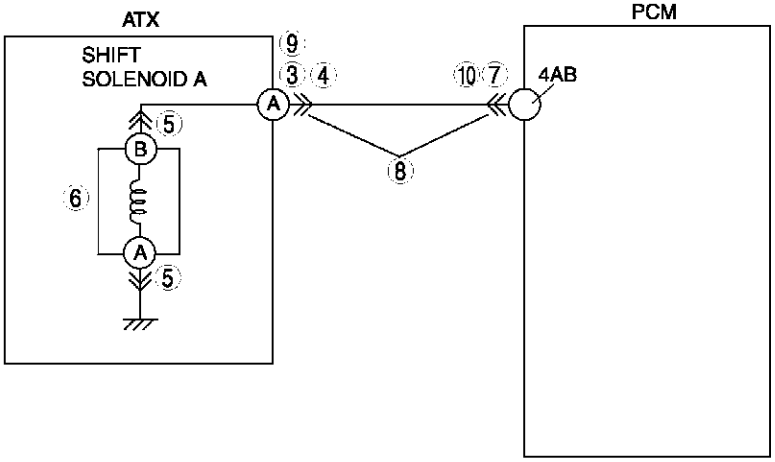

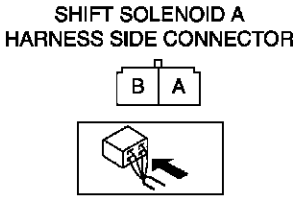

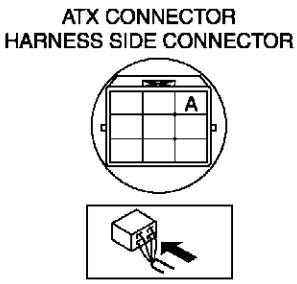

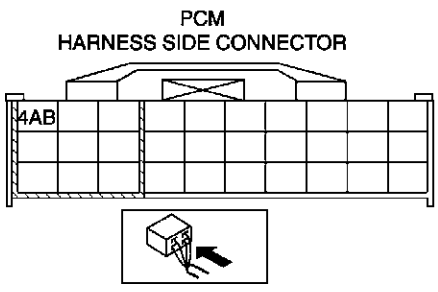

K

Diagnostic procedure

STEP	INSPECTION		ACTION
1	**VERIFY FREEZE FRAME DATA HAS BEEN RECORDED** • Has FREEZE FRAME PID DATA been recorded?	Yes	Go to next step.
		No	Record FREEZE FRAME PID DATA on repair order, then go to next step.
2	**VERIFY RELATED REPAIR INFORMATION AVAILABILITY** • Check for related Service Bulletins availability. • Is any related repair information available?	Yes	Perform repair or diagnosis according to available repair information. • If vehicle is not repaired, go to next step.
		No	Go to next step.
3	**INSPECT ATX CONNECTOR FOR POOR CONNECTION** • Turn ignition key to OFF. • Disconnect ATX connector. • Check for poor connection (damaged/pulled-out terminals, corrosion, etc.). • Is connection okay?	Yes	Go to next step.
		No	Repair or replace connector and/or terminals, then go to Step 11.
4	**INSPECT RESISTANCE** • Check resistance between ATX connector terminal A (transaxle case side) and body ground. • Is resistance **within 1.0—4.2 ohms**? (See K–26 Resistance Inspection (On-Vehicle Inspection).)	Yes	Go to Step 7.
		No	Go to next step.
5	**INSPECT SHIFT SOLENOID A CONNECTOR FOR POOR CONNECTION** • Disconnect shift solenoid A connector. • Check for poor connection (damaged/pulled-out terminals, corrosion, etc.). • Is connection okay?	Yes	Go to next step.
		No	Repair or replace connector and/or terminal, then go to Step 11.
6	**INSPECT RESISTANCE** • Inspect resistance between shift solenoid A terminals A and B (part-side). • Is resistance **within 1.0—4.2 ohms**? (See K–27 Resistance Inspection (Off-Vehicle Inspection).)	Yes	Replace solenoid harness, then go to Step 11.
		No	Verify shift solenoid A installation. • If solenoid installed correctly, replace solenoid, then go to Step 11. (See K–28 SOLENOID VALVE REMOVAL/INSTALLATION.)
7	**INSPECT PCM CONNECTOR FOR POOR CONNECTION** • Disconnect PCM connector. • Check for poor connection (damaged/pulled-out terminals, corrosion, etc.). • Is connection okay?	Yes	Go to next step.
		No	Repair or replace connector and/or terminals, then go to Step 11.
8	**INSPECT ATX CONNECTOR CIRCUIT FOR OPEN** • Inspect for continuity between PCM terminal 4AB (harness-side) and ATX connector terminal A (vehicle harness-side). • Is there continuity between terminals?	Yes	Go to next step.
		No	Repair or replace harness, then go to Step 11.
9	**INSPECT ATX CONNECTOR CIRCUIT FOR SHORT TO POWER** • Turn ignition key to ON (engine OFF). • Inspect voltage at ATX connector terminal A (vehicle harness-side). • Is voltage **0 V**?	Yes	Go to next step.
		No	Repair or replace harness, then go to Step 11.
10	**INSPECT PCM CIRCUIT FOR SHORT TO GROUND** • Turn ignition key to OFF. • Inspect for continuity between PCM terminal 4AB (harness-side) and body ground. • Is there continuity?	Yes	Repair or replace harness, then go to Step 11.
		No	Go to next step.

STEP	INSPECTION		ACTION
11	**VERIFY TROUBLESHOOTING OF DTC P0753 COMPLETED** • Make sure to reconnect all disconnected connectors. • Clear DTC from memory using WDS or equivalent. • Drive vehicle in D range and make sure that gears shift smoothly from 1GR to 4GR. • Are any DTCs present?	Yes	Replace PCM, then go to next step. (See F–43 PCM REMOVAL/INSTALLATION.)
		No	No concern is detected. Go to next step.
12	**VERIFY AFTER REPAIR PROCEDURE** • Perform “After Repair Procedure”. (See K–52 AFTER REPAIR PROCEDURE.) • Are any DTCs present?	Yes	Go to applicable DTC inspection.
		No	Troubleshooting completed.

DTC P0756

A6E567001030W23

DTC P0756	Shift solenoid B stuck OFF
DETECTION CONDITION	• When any of DTC P0732, P0733, and P0734 are not generated, and all conditions below satisfied. — ATF temperature **20 °C {68 °F} or above**. — Driving in 1GR at D range. — Engine run. — Turbine speed **within 225—4,988 rpm**. — Differential gear case (output) revolution speed **35 rpm or above** — Throttle opening angle (TP PID) **5.67% or above**. — Revolution ratio of forward clutch drum revolution to differential gear case revolution **below 2.157**. — Any of the following not generated: DTC P0500, P0706, P0707, P0708, P0712, P0713, P0715, P0751, P0752, P0753, P0756, P0757, P0758, P0761, P0762, P0763, P0766, P0767, P0767, P0768, P0771, P0772, P0773. **Diagnostic support note:** • This is a continuous monitor (CCM). • MIL illuminates if PCM detects the above malfunction condition in two consecutive drive cycles or in one drive cycle while the DTC for the same malfunction has been stored in the PCM. • PENDING CODE is available if PCM detects the above malfunction condition during first drive cycle. • FREEZE FRAME DATA is available. • HOLD indicator light flashes. • DTC is stored in the PCM memory.
POSSIBLE CAUSE	• ATF level low • Deteriorated ATF • Shift solenoid B stuck • Control valve stuck • PCM malfunction

Diagnostic procedure

STEP	INSPECTION		ACTION
1	**VERIFY FREEZE FRAME DATA HAS BEEN RECORDED** • Has FREEZE FRAME PID DATA been recorded?	Yes	Go to next step.
		No	Record FREEZE FRAME PID DATA on repair order, then go to next step.
2	**VERIFY RELATED REPAIR INFORMATION AVAILABILITY** • Check for related Service Bulletins availability. • Is any related repair information available?	Yes	Perform repair or diagnosis according to available repair information. • If vehicle is not repaired, go to next step.
		No	Go to next step.
3	**CHECK ATF CONDITION** • Turn ignition key to OFF. • Check ATF condition. — Clear red: Normal — Milky: Water mixed in fluid — Reddish brown: Deteriorated ATF • Is it okay? (See K–12 Automatic Transaxle Fluid (ATF) Condition Inspection.)	Yes	Go to next step.
		No	If ATF color milky or reddish brown, replace ATF, then go to Step 5. (See K–13 AUTOMATIC TRANSAXLE FLUID (ATF) REPLACEMENT.)
4	**CHECK ATF LEVEL** • Start engine. • Warm up ATX. • Is ATF level within specification? (See K–12 Automatic Transaxle Fluid (ATF) Level Inspection.)	Yes	Go to next step.
		No	Adjust ATF level, then go to Step 7. (See K–12 Automatic Transaxle Fluid (ATF) Level Inspection.)

STEP	INSPECTION		ACTION
5	**INSPECT LINE PRESSURE** • Start engine. • Measure line pressure. **Specification** **Idle: 330—470 kPa {3.4—4.7 kgf/cm^2, 49—66 psi}** **Stall: 1,200—1,360 kPa {12.3—13.8 kgf/cm^2, 175—196 psi}** • Is line pressure within specification? (See K–6 Line Pressure Test.)	Yes	Go to next step.
		No	• All ranges: Replace oil pump or control valve body, then go to Step 7. • Any ranges: Replace ATX, then go to Step 7. (See K–29 AUTOMATIC TRANSAXLE REMOVAL/INSTALLATION.) (See ATX Workshop Manual FN4A-EL (9999-95-FN4A-99).)
6	**CHECK OPERATION OF EACH VALVE AND EACH SPRING** • Turn ignition key to OFF. • Remove control valve body. • Disassemble control valve body. • Is each valve operation okay and is return spring okay? (See K–34 CONTROL VALVE BODY REMOVAL, K–35 CONTROL VALVE BODY INSTALLATION.) (See ATX Workshop Manual FN4A-EL (9999-95-FN4A-99).)	Yes	Replace ATX, then go to next step. (See K–29 AUTOMATIC TRANSAXLE REMOVAL/INSTALLATION.) (See ATX Workshop Manual FN4A-EL (9999-95-FN4A-99).)
		No	Repair or replace shift valve and return spring, then go to next step. (See K–34 CONTROL VALVE BODY REMOVAL, K–35 CONTROL VALVE BODY INSTALLATION.) (See ATX Workshop Manual FN4A-EL (9999-95-FN4A-99).)
7	**VERIFY TROUBLESHOOTING OF DTC P0756 COMPLETED** • Make sure to reconnect all disconnected connectors. • Clear DTC from memory using WDS or equivalent. • Start engine. • Warm up ATX. • Drive the vehicle under the following conditions and make sure that gears shift smoothly from 1GR to 4GR. — ATF temperature: **20 °C {68 °F} or above** — Drive in D range — Engine speed: **450 rpm or above** (RPM PID) — Throttle opening angle (TP PID): **5.67% or above** • Is pending code present?	Yes	Replace PCM, then go to next step. (See F–43 PCM REMOVAL/INSTALLATION.)
		No	Go to next step.
8	**VERIFY AFTER REPAIR PROCEDURE** • Perform “After Repair Procedure”. (See K–52 AFTER REPAIR PROCEDURE.) • Are any DTCs present?	Yes	Go to applicable DTC inspection.
		No	Troubleshooting completed.

DTC P0757

A6E567001030W24

DTC P0757	Shift solenoid B stuck ON
DETECTION CONDITION	• When either of DTC P0731 and P0733 are not generated, and both the following conditions are satisfied. — When all conditions below satisfied while driving in 2GR. • ATF temperature **20 °C {68 °F} or above**. • Driving in D range. • Engine run. • Turbine speed **within 225—4,988 rpm**. • Differential gear case (output) revolution speed **35 rpm or above**. • Revolution ratio of forward clutch drum revolution to differential gear case revolution **below 1.249 or more than 2.157**. • Any of the following not generated: DTC P0500, P0705, P0706, P0710, P0715,P0751, P0752, P0753, P0756, P0757, P0758, P0761, P0762, P0763, P0766, P0767, P0768, P0771, P0772, P0773. — When all conditions below satisfied with driving in 4GR. • ATF temperature **20 °C {68 °F} or above**. • Driving in D range. • Engine run. • Turbine speed **within 225—4,988 rpm**. • Differential gear case (output) revolution speed **35 rpm or above**. • Vehicle speed **50 km/h {31 mph}**. • Throttle opening angle closed throttle position. • Revolution ratio of forward clutch drum revolution to differential gear case revolution **below 0.6 or 1.249 or above**. • Any of the following not generated: DTC P0500, P0706, P0707, P0708, P0712, P0713, P0715, P0751, P0752, P0753, P0756, P0757, P0758, P0761, P0762, P0763, P0766, P0767, P0767, P0768, P0771, P0772, P0773. **Diagnostic support note:** • This is a continuous monitor (CCM). • MIL illuminates if PCM detects the above malfunction condition in two consecutive drive cycles or in one drive cycle while the DTC for the same malfunction has been stored in the PCM. • PENDING CODE is available if PCM detects the above malfunction condition during first drive cycle. • FREEZE FRAME DATA is available. • HOLD indicator light flashes. • DTC is stored in the PCM memory.
POSSIBLE CAUSE	• ATF level low • Deteriorated ATF • Shift solenoid B stuck • Control valve stuck • PCM malfunction

Diagnostic procedure

STEP	INSPECTION		ACTION
1	**VERIFY FREEZE FRAME DATA HAS BEEN RECORDED** • Has FREEZE FRAME PID DATA been recorded?	Yes	Go to next step.
		No	Record FREEZE FRAME PID DATA on repair order, then go to next step.
2	**VERIFY RELATED REPAIR INFORMATION AVAILABILITY** • Check for related Service Bulletins availability. • Is any related repair information available?	Yes	Perform repair or diagnosis according to available repair information. • If vehicle is not repaired, go to next step.
		No	Go to next step.
3	**CHECK ATF CONDITION** • Turn ignition key to OFF. • Check ATF condition. — Clear red: Normal — Milky: Water mixed in fluid — Reddish brown: Deteriorated ATF • Is it okay? (See K–12 Automatic Transaxle Fluid (ATF) Condition Inspection.)	Yes	Go to next step.
		No	If ATF color milky or reddish brown, replace ATF, then go to Step 5. (See K–13 AUTOMATIC TRANSAXLE FLUID (ATF) REPLACEMENT.)
4	**CHECK ATF LEVEL** • Start engine. • Warm up ATX. • Is ATF level within specification? (See K–12 Automatic Transaxle Fluid (ATF) Level Inspection.)	Yes	Go to next step.
		No	Adjust ATF level, then go to Step 7. (See K–12 Automatic Transaxle Fluid (ATF) Level Inspection.)

STEP	INSPECTION		ACTION
5	**INSPECT LINE PRESSURE** • Start engine. • Measure line pressure. **Specification** **Idle: 330—470 kPa {3.4—4.7 kgf/cm^2, 49—66 psi}** **Stall: 1,200—1,360 kPa {12.3—13.8 kgf/cm^2, 175—196 psi}** • Is line pressure within specification? (See K–6 Line Pressure Test.)	Yes	Go to next step.
		No	• All ranges: Replace oil pump or control valve body, then go to Step 7. • Any ranges: Replace ATX, then go to Step 7. (See K–29 AUTOMATIC TRANSAXLE REMOVAL/INSTALLATION.) (See ATX Workshop Manual FN4A-EL (9999-95-FN4A-99).)
6	**CHECK OPERATION OF EACH VALVE AND EACH SPRING** • Turn ignition key to OFF. • Remove control valve body. • Disassemble control valve body. • Is each valve operation okay and is return spring okay? (See K–34 CONTROL VALVE BODY REMOVAL, K–35 CONTROL VALVE BODY INSTALLATION.) (See ATX Workshop Manual FN4A-EL (9999-95-FN4A-99).)	Yes	Replace ATX, then go to next step. (See K–29 AUTOMATIC TRANSAXLE REMOVAL/INSTALLATION.) (See ATX Workshop Manual FN4A-EL (9999-95-FN4A-99).)
		No	Repair or replace shift valve and return spring, then go to next step. (See K–34 CONTROL VALVE BODY REMOVAL, K–35 CONTROL VALVE BODY INSTALLATION.) (See ATX Workshop Manual FN4A-EL (9999-95-FN4A-99).)
7	**VERIFY TROUBLESHOOTING OF DTC P0757 COMPLETED** • Make sure to reconnect all disconnected connectors. • Clear DTC from memory using WDS or equivalent. • Start engine. • Warm up ATX. • Drive the vehicle under the following conditions make sure that gears shift smoothly from 1GR to 4GR. — ATF temperature: **20 °C {68 °F} or above** — Drive in D range — Engine speed: **450 rpm or above** (RPM PID) — Throttle opening angle (TP PID): **0%** (4th gear only) — Vehicle speed (VSS PID): **50 km/h {31 mph}** (4th gear only) • Is pending code present?	Yes	Replace PCM, then go to next step. (See F–43 PCM REMOVAL/INSTALLATION.)
		No	Go to next step.
8	**VERIFY AFTER REPAIR PROCEDURE** • Perform “After Repair Procedure”. (See K–52 AFTER REPAIR PROCEDURE.) • Are any DTCs present?	Yes	Go to applicable DTC inspection.
		No	Troubleshooting completed.

DTC P0758

A6E567001030W25

DTC P0758	Shift solenoid B malfunction (electrical)
DETECTION CONDITION	• If PCM detects either of following conditions, PCM determines that shift solenoid B circuit has a malfunction: — Shift solenoid B voltage is stuck at **B+** after engine start. — Shift solenoid B voltage is stuck at **0 V** after engine start. **Diagnostic support note:** • This is a continuous monitor (CCM). • MIL illuminates if PCM detects the above malfunction conditions during first drive cycle. • PENDING CODE is not available. • FREEZE FRAME DATA is available. • HOLD indicator light flashes. • DTC is stored in the PCM memory.

DTC P0758	Shift solenoid B malfunction (electrical)
POSSIBLE CAUSE	• Shift solenoid B malfunction • Short to ground between ATX connector terminal C and PCM terminal 4AC • Short to power between ATX connector terminal C and PCM terminal 4AC • Open circuit between shift solenoid B terminal B and ATX connector terminal C • Open circuit between ATX connector terminal C and PCM terminal 4AC • Open circuit between shift solenoid B terminal A and body ground point • Damaged connector between shift solenoid B and PCM • PCM malfunction

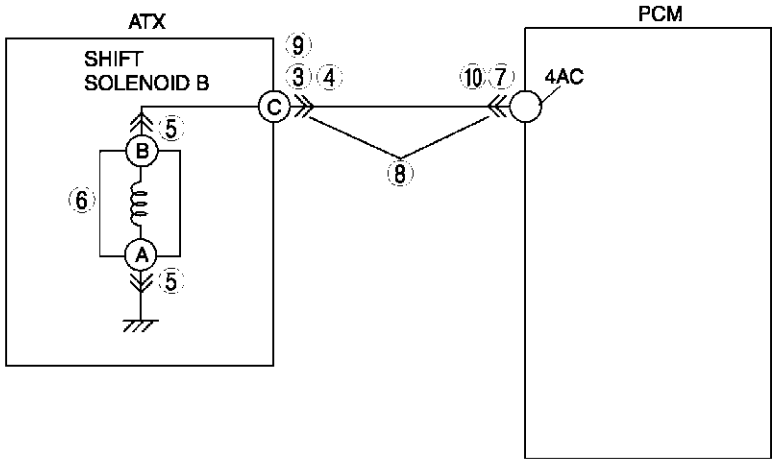

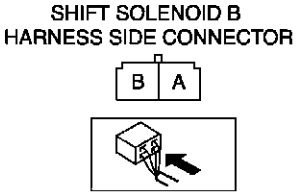

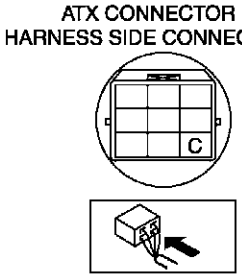

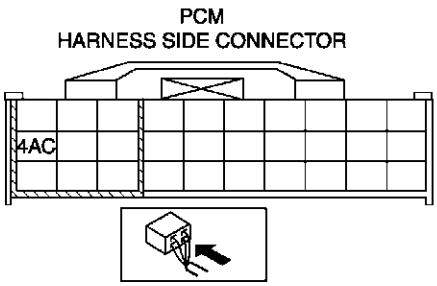

Diagnostic procedure

STEP	INSPECTION		ACTION
1	**VERIFY FREEZE FRAME DATA HAS BEEN RECORDED** • Has FREEZE FRAME PID DATA been recorded?	Yes	Go to next step.
		No	Record FREEZE FRAME PID DATA on repair order, then go to next step.
2	**VERIFY RELATED REPAIR INFORMATION AVAILABILITY** • Check for related Service Bulletins availability. • Is any related repair information available?	Yes	Perform repair or diagnosis according to available repair information. • If vehicle is not repaired, go to next step.
		No	Go to next step.
3	**INSPECT ATX CONNECTOR FOR POOR CONNECTION** • Turn ignition key to OFF. • Disconnect ATX connector. • Check for poor connection (damaged/pulled-out terminals, corrosion, etc.). • Is connection okay?	Yes	Go to next step.
		No	Repair or replace connector and/or terminals, then go to Step 11.

STEP	INSPECTION		ACTION
4	**INSPECT RESISTANCE** • Inspect resistance between ATX connector terminal C (transaxle case side) and body ground. • Is resistance **within 1.0—4.2 ohms**? (See K–26 Resistance Inspection (On-Vehicle Inspection).)	Yes	Go to Step 7.
		No	Go to next step.
5	**INSPECT SHIFT SOLENOID B CONNECTOR FOR POOR CONNECTION** • Disconnect shift solenoid B connector. • Check for poor connection (damaged/pulled-out terminals, corrosion, etc.). • Is connection okay?	Yes	Go to next step.
		No	Repair or replace connector and/or terminal, then go to Step 11.
6	**INSPECT RESISTANCE** • Inspect resistance between shift solenoid B terminals A and B (part-side). • Is resistance **within 1.0—4.2 ohms**? (See K–27 Resistance Inspection (Off-Vehicle Inspection).)	Yes	Replace solenoid harness, then go to Step 11.
		No	Verify shift solenoid B installation. • If solenoid installed correctly, replace solenoid, then go to Step 11. (See K–28 SOLENOID VALVE REMOVAL/INSTALLATION.)
7	**INSPECT PCM CONNECTOR FOR POOR CONNECTION** • Disconnect PCM connector. • Check for poor connection (damaged/pulled-out terminals, corrosion, etc.). • Is connection okay?	Yes	Go to next step.
		No	Repair or replace connector and/or terminals, then go to Step 11.
8	**INSPECT ATX CONNECTOR CIRCUIT FOR OPEN** • Inspect for continuity between PCM terminal 4AC (harness-side) and ATX connector terminal C (vehicle harness-side). • Is there continuity between terminals?	Yes	Go to next step.
		No	Repair or replace harness, then go to Step 11.
9	**INSPECT ATX CONNECTOR CIRCUIT FOR SHORT TO POWER** • Turn ignition key to ON (engine OFF). • Check for voltage at ATX connector terminal C (vehicle harness-side). • Is voltage **0 V**?	Yes	Go to next step.
		No	Repair or replace harness, then go to Step 11.
10	**INSPECT PCM CIRCUIT FOR SHORT TO GROUND** • Turn ignition key to OFF. • Check for continuity between PCM terminal 4AC (harness-side) and body ground. • Is there continuity?	Yes	Repair or replace harness, then go to Step 11.
		No	Go to next step.
11	**VERIFY TROUBLESHOOTING OF DTC P0758 SHIFT SOLENOID B COMPLETED** • Make sure to reconnect all disconnected connectors. • Clear DTC from memory using WDS or equivalent. • Drive vehicle in D range and make sure that gears shift smoothly from 1GR to 4GR. • Are any DTCs present?	Yes	Replace PCM, then go to next step. (See F–43 PCM REMOVAL/INSTALLATION.)
		No	Go to next step.
12	**VERIFY AFTER REPAIR PROCEDURE** • Perform “After Repair Procedure”. (See K–52 AFTER REPAIR PROCEDURE.) • Are any DTCs present?	Yes	Go to applicable DTC inspection.
		No	Troubleshooting completed.

DTC P0761

A6E567001030W26

DTC P0761	Shift solenoid C stuck OFF
DETECTION CONDITION	• When either of DTC P0733 and P0734 are not generated, and both the following conditions are satisfied. — When all conditions below satisfied while driving in 1GR. • ATF temperature **20 °C {68 °F} or above**. • Driving in D range. • Engine run. • Turbine speed **within 225—4,988 rpm**. • Throttle opening angle (TP PID) **5.67% or above**. • Differential gear case (output) revolution speed **35 rpm or above**. • Revolution ratio of forward clutch drum revolution to differential gear case revolution **below 2.157**. • Any of the following not generated: DTC P0500, P0706, P0707, P0708, P0712, P0713, P0715, P0751, P0752, P0753, P0756, P0757, P0758, P0761, P0762, P0763, P0766, P0767, P0767, P0768, P0771, P0772, P0773. — When all conditions below satisfied while driving in 2GR. • ATF temperature **20 °C {68 °F} or above**. • Driving in D range. • Engine run. • Turbine speed **within 225—4,988 rpm**. • Differential gear case (output) revolution speed **35 rpm or above**. • Revolution ratio of forward clutch drum revolution to differential gear case revolution **below 1.249 or 2.157 or above**. • Any of the following not generated: DTC P0500, P0706, P0707, P0708, P0712, P0713, P0715, P0751, P0752, P0753, P0756, P0757, P0758, P0761, P0762, P0763, P0766, P0767, P0767, P0768, P0771, P0772, P0773. **Diagnostic support note:** • This is a continuous monitor (CCM). • MIL illuminates if PCM detects the above malfunction condition in two consecutive drive cycles or in one drive cycle while the DTC for the same malfunction has been stored in the PCM. • PENDING CODE is available if PCM detects the above malfunction condition during first drive cycle. • FREEZE FRAME DATA is available. • HOLD indicator light flashes. • DTC is stored in the PCM memory.
POSSIBLE CAUSE	• ATF level low • Deteriorated ATF • Shift solenoid C stuck • Control valve stuck • PCM malfunction

Diagnostic procedure

STEP	INSPECTION		ACTION
1	**VERIFY FREEZE FRAME DATA HAS BEEN RECORDED** • Has FREEZE FRAME PID DATA been recorded?	Yes	Go to next step.
		No	Record FREEZE FRAME PID DATA on repair order, then go to next step.
2	**VERIFY RELATED REPAIR INFORMATION AVAILABILITY** • Check for related Service Bulletins availability. • Is any related repair information available?	Yes	Perform repair or diagnosis according to available repair information. • If vehicle is not repaired, go to next step.
		No	Go to next step.
3	**CHECK ATF CONDITION** • Turn ignition key to OFF. • Check ATF condition. — Clear red: Normal — Milky: Water mixed in fluid — Reddish brown: Deteriorated ATF • Is it okay? (See K–12 Automatic Transaxle Fluid (ATF) Condition Inspection.)	Yes	Go to next step.
		No	If ATF color milky or reddish brown, replace ATF, then go to Step 5. (See K–13 AUTOMATIC TRANSAXLE FLUID (ATF) REPLACEMENT.)
4	**CHECK ATF LEVEL** • Start engine. • Warm up ATX. • Is ATF level within specification? (See K–12 Automatic Transaxle Fluid (ATF) Level Inspection.)	Yes	Go to next step.
		No	Adjust ATF level, then go to Step 7. (See K–12 Automatic Transaxle Fluid (ATF) Level Inspection.)

K

STEP	INSPECTION		ACTION
5	**INSPECT LINE PRESSURE** • Start engine. • Measure line pressure. **Specification** **Idle: 330—470 kPa {3.4—4.7 kgf/cm^2, 49—66 psi}** **Stall: 1,200—1,360 kPa {12.3—13.8 kgf/cm^2, 175—196 psi}** • Is line pressure within specification? (See K–6 Line Pressure Test.)	Yes	Go to next step.
		No	• All ranges: Replace oil pump or control valve body, then go to Step 7. • Any ranges: Replace ATX, then go to Step 7. (See K–29 AUTOMATIC TRANSAXLE REMOVAL/INSTALLATION.) (See ATX Workshop Manual FN4A-EL (9999-95-FN4A-99).)
6	**CHECK OPERATION OF EACH VALVE AND EACH SPRING** • Turn ignition key to OFF. • Remove control valve body. • Disassemble control valve body. • Is each valve operation okay and is return spring okay? (See K–34 CONTROL VALVE BODY REMOVAL, K–35 CONTROL VALVE BODY INSTALLATION.) (See ATX Workshop Manual FN4A-EL (9999-95-FN4A-99).)	Yes	Replace ATX, then go to next step. (See K–29 AUTOMATIC TRANSAXLE REMOVAL/INSTALLATION.) (See ATX Workshop Manual FN4A-EL (9999-95-FN4A-99).)
		No	Repair or replace shift valve and return spring, then go to next step. (See K–34 CONTROL VALVE BODY REMOVAL, K–35 CONTROL VALVE BODY INSTALLATION.) (See ATX Workshop Manual FN4A-EL (9999-95-FN4A-99).)
7	**VERIFY TROUBLESHOOTING OF DTC P0761 COMPLETED** • Make sure to reconnect all disconnected connectors. • Clear DTC from memory using WDS or equivalent. • Start engine. • Warm up ATX. • Drive the vehicle under the following conditions and make sure that gears shift smoothly from 1GR to 4GR. — ATF temperature: **20 °C {68 °F} or above** — Drive in D range — Throttle opening angle (TP PID): **5.67% or above** • Is pending code present?	Yes	Replace PCM, then go to next step. (See F–43 PCM REMOVAL/INSTALLATION.)
		No	Go to next step.
8	**VERIFY AFTER REPAIR PROCEDURE** • Perform “After Repair Procedure”. (See K–52 AFTER REPAIR PROCEDURE.) • Are any DTCs present?	Yes	Go to applicable DTC inspection.
		No	Troubleshooting completed.

DTC P0762

A6E567001030W27

DTC P0762	Shift solenoid C stuck ON
DETECTION CONDITION	• When either of DTC P0731 and P0732 are not generated, and both the following conditions are satisfied. — When all conditions below satisfied while driving in 3GR. • ATF temperature **20 °C {68 °F} or above**. • Driving in D range. • Engine run. • Turbine speed **within 225—4,988 rpm**. • Differential gear case (output) revolution speed **35 rpm or above**. • Revolution ratio of forward clutch drum revolution to differential gear case revolution **below 0.863 or 1.249 or above**. • Any of the following not generated: DTC P0500, P0706, P0707, P0708, P0712, P0713, P0715, P0751, P0752, P0753, P0756, P0757, P0758, P0761, P0762, P0763, P0766, P0767, P0767, P0768, P0771, P0772, P0773. — When all conditions below satisfied while driving in 4GR. • ATF temperature **20 °C {68 °F} or above**. • Driving in D range. • Engine run. • Turbine speed **within 225—4,988 rpm**. • Vehicle speed **50 km/h {31mph}** or above. • Differential gear case (output) revolution speed **35 rpm or above**. • Throttle opening angle at closed throttle position • Revolution ratio of forward clutch drum revolution to differential gear case revolution **below 0.6 or 1.249 or above**. • Any of the following not generated: DTC P0500, P0706, P0707, P0708, P0712, P0713, P0715, P0751, P0752, P0753, P0756, P0757, P0758, P0761, P0762, P0763, P0766, P0767, P0767, P0768, P0771, P0772, P0773. **Diagnostic support note:** • This is a continuous monitor (CCM). • MIL illuminates if PCM detects the above malfunction condition in two consecutive drive cycles or in one drive cycle while the DTC for the same malfunction has been stored in the PCM. • PENDING CODE is available if PCM detects the above malfunction condition during first drive cycle. • FREEZE FRAME DATA is available. • HOLD indicator light flashes. • DTC is stored in the PCM memory.
POSSIBLE CAUSE	• ATF level low • Deteriorated ATF • Shift solenoid C and pressure control solenoid stuck • Control valve stuck • PCM malfunction

Diagnostic procedure

STEP	INSPECTION		ACTION
1	**VERIFY FREEZE FRAME DATA HAS BEEN RECORDED** • Has FREEZE FRAME PID DATA been recorded?	Yes	Go to next step.
		No	Record FREEZE FRAME PID DATA on repair order, then go to next step.
2	**VERIFY RELATED REPAIR INFORMATION AVAILABILITY** • Check for related Service Bulletins availability. • Is any related repair information available?	Yes	Perform repair or diagnosis according to available repair information. • If vehicle is not repaired, go to next step.
		No	Go to next step.
3	**CHECK ATF CONDITION** • Turn ignition key to OFF. • Check ATF condition. — Clear red: Normal — Milky: Water mixed in fluid — Reddish brown: Deteriorated ATF • Is it okay? (See K–12 Automatic Transaxle Fluid (ATF) Condition Inspection.)	Yes	Go to next step.
		No	If ATF color milky or reddish brown, replace ATF, then go to Step 5. (See K–13 AUTOMATIC TRANSAXLE FLUID (ATF) REPLACEMENT.)
4	**CHECK ATF LEVEL** • Start engine. • Warm up ATX. • Is ATF level within specification? (See K–12 Automatic Transaxle Fluid (ATF) Level Inspection.)	Yes	Go to next step.
		No	Adjust ATF level, then go to Step 7. (See K–12 Automatic Transaxle Fluid (ATF) Level Inspection.)

K

STEP	INSPECTION		ACTION
5	**INSPECT LINE PRESSURE** • Start engine. • Measure line pressure. **Specification** **Idle: 330—470 kPa {3.4—4.7 kgf/cm^2, 49—66 psi}** **Stall: 1,200—1,360 kPa {12.3—13.8 kgf/cm^2, 175—196 psi}** • Is line pressure within specification? (See K–6 Line Pressure Test.)	Yes	Go to next step.
		No	• All ranges: Replace oil pump or control valve body, then go to Step 7. • Any ranges: Replace ATX, then go to Step 7. (See K–29 AUTOMATIC TRANSAXLE REMOVAL/INSTALLATION.) (See ATX Workshop Manual FN4A-EL (9999-95-FN4A-99).)
6	**CHECK OPERATION OF EACH VALVE AND EACH SPRING** • Turn ignition key to OFF. • Remove control valve body. • Disassemble control valve body. • Is each valve operation okay and is return spring okay? (See K–34 CONTROL VALVE BODY REMOVAL, K–35 CONTROL VALVE BODY INSTALLATION.) (See ATX Workshop Manual FN4A-EL (9999-95-FN4A-99).)	Yes	Replace ATX, then go to next step. (See K–29 AUTOMATIC TRANSAXLE REMOVAL/INSTALLATION.) (See ATX Workshop Manual FN4A-EL (9999-95-FN4A-99).)
		No	Repair or replace shift valve and return spring, then go to next step. (See K–34 CONTROL VALVE BODY REMOVAL, K–35 CONTROL VALVE BODY INSTALLATION.) (See ATX Workshop Manual FN4A-EL (9999-95-FN4A-99).)
7	**VERIFY TROUBLESHOOTING OF DTC P0762 COMPLETED** • Make sure to reconnect all disconnected connectors. • Clear DTC from memory using WDS or equivalent. • Start engine. • Warm up ATX. • Drive the vehicle under the following conditions and make sure that gears shift smoothly from 1GR to 4GR. — ATF temperature: **20 °C {68 °F} or above** — Drive in D range — Throttle opening angle (TP PID): **0%** (4GR only) — Vehicle speed (VSS PID): **50 km/h {31 mph} or above** (4GR only) • Is pending code present?	Yes	Replace PCM, then go to next step. (See F–43 PCM REMOVAL/INSTALLATION.)
		No	Go to next step.
8	**VERIFY AFTER REPAIR PROCEDURE** • Perform “After Repair Procedure”. (See K–52 AFTER REPAIR PROCEDURE.) • Are any DTCs present?	Yes	Go to applicable DTC inspection.
		No	Troubleshooting completed.

DTC P0763

A6E567001030W28

DTC P0763	Shift solenoid C malfunction (electrical)
DETECTION CONDITION	• If PCM detects either of following conditions, PCM determines that shift solenoid C circuit has a malfunction: — Shift solenoid C voltage is stuck at **B+** after engine start. — Shift solenoid C voltage is stuck at **0 V** after engine start. **Diagnostic support note:** • This is a continuous monitor (CCM). • MIL illuminates if PCM detects the above malfunction conditions during first drive cycle. • PENDING CODE is not available. • FREEZE FRAME DATA is available. • HOLD indicator light flashes. • DTC is stored in the PCM memory.
POSSIBLE CAUSE	• Shift solenoid C malfunction • Short to ground between ATX connector terminal G and PCM terminal 4Y • Short to power between ATX connector terminal G and PCM terminal 4Y • Open circuit between shift solenoid C terminal B and ATX connector terminal G • Open circuit between ATX connector terminal G and PCM terminal 4Y • Open circuit between shift solenoid C terminal A and body ground point • Damaged connector between shift solenoid C and PCM. • PCM malfunction.

DTC P0763	Shift solenoid C malfunction (electrical)

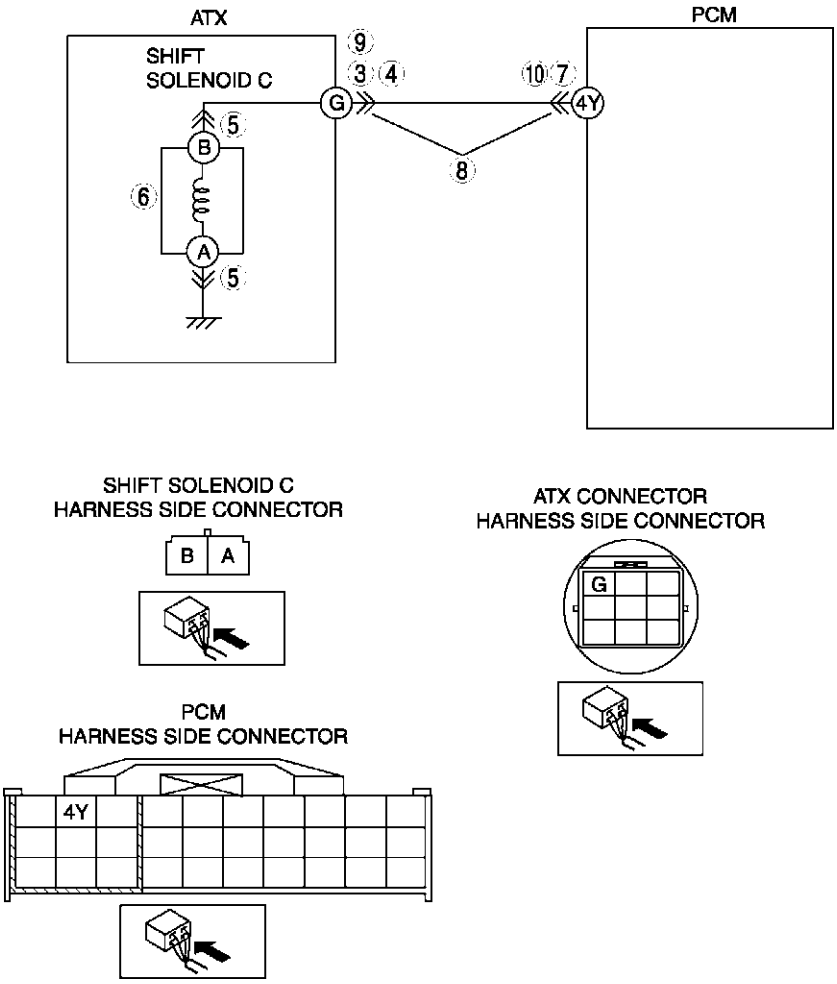

K

Diagnostic procedure

STEP	INSPECTION		ACTION
1	**VERIFY FREEZE FRAME DATA HAS BEEN RECORDED** • Has FREEZE FRAME PID DATA been recorded?	Yes	Go to next step.
		No	Record FREEZE FRAME PID DATA on repair order, then go to next step.
2	**VERIFY RELATED REPAIR INFORMATION AVAILABILITY** • Check for related Service Bulletins availability. • Is any related repair information available?	Yes	Perform repair or diagnosis according to available repair information. • If vehicle is not repaired, go to next step.
		No	Go to next step.
3	**INSPECT ATX CONNECTOR FOR POOR CONNECTION** • Turn ignition key to OFF. • Disconnect ATX connector. • Check for poor connection (damaged/pulled-out terminals, corrosion, etc.). • Is connection okay?	Yes	Go to next step.
		No	Repair or replace connector and/or terminals, then go to Step 11.
4	**INSPECT RESISTANCE** • Inspect resistance between ATX connector terminal G (transaxle case side) and body ground. • Is resistance **within 1.0—4.2 ohms**? (See K–26 Resistance Inspection (On-Vehicle Inspection).)	Yes	Go to Step 7.
		No	Go to next step.

STEP	INSPECTION		ACTION
5	**INSPECT SHIFT SOLENOID C CONNECTOR FOR POOR CONNECTION** • Disconnect shift solenoid C connector. • Check for poor connection (damaged/pulled-out terminals, corrosion, etc.). • Is connection okay?	Yes	Go to next step.
		No	Repair or replace connector and/or terminal, then go to Step 11.
6	**INSPECT RESISTANCE** • Inspect resistance between shift solenoid C terminals A and B (part-side). • Is resistance **within 1.0—4.2 ohms**? (See K–27 Resistance Inspection (Off-Vehicle Inspection).)	Yes	Replace solenoid harness, then go to Step 11.
		No	Verify shift solenoid C installation. • If solenoid installed correctly, replace solenoid, then go to Step 11. (See K–28 SOLENOID VALVE REMOVAL/INSTALLATION.)
7	**INSPECT PCM CONNECTOR FOR POOR CONNECTION** • Disconnect PCM connector. • Check for poor connection (damaged/pulled-out terminals, corrosion, etc.). • Is connection okay?	Yes	Go to next step.
		No	Repair or replace connector and/or terminals, then go to Step 11.
8	**INSPECT ATX CONNECTOR CIRCUIT FOR OPEN** • inspect for continuity between PCM terminal 4Y (harness-side) and ATX connector terminal G (vehicle harness-side). • Is there continuity between terminals?	Yes	Go to next step.
		No	Repair or replace harness, then go to Step 11.
9	**INSPECT ATX CONNECTOR CIRCUIT FOR SHORT TO POWER** • Turn ignition key to ON (engine OFF). • Check voltage at ATX connector terminal G (vehicle harness-side). • Is voltage **0 V**?	Yes	Go to next step.
		No	Repair or replace harness, then go to Step 11.
10	**INSPECT PCM CIRCUIT FOR SHORT TO GROUND** • Turn ignition key to OFF. • Inspect for continuity between PCM terminal 4Y (harness-side) and body ground. • Is there continuity?	Yes	Repair or replace harness, then go to Step 11.
		No	Go to next step.
11	**VERIFY TROUBLESHOOTING OF DTC P0763 COMPLETED** • Make sure to reconnect all disconnected connectors. • Clear DTC from memory using WDS or equivalent. • Drive vehicle in D range and make sure that gears shift smoothly from 1GR to 4GR. • Are any DTCs present?	Yes	Replace PCM, then go to next step. (See F–43 PCM REMOVAL/INSTALLATION.)
		No	No concern is detected. Go to next step.
12	**VERIFY AFTER REPAIR PROCEDURE** • Perform “After Repair Procedure”. (See K–52 AFTER REPAIR PROCEDURE.) • Are any DTCs present?	Yes	Go to applicable DTC inspection.
		No	Troubleshooting completed.

DTC P0766

A6E567001030W29

DTC P0766	Shift solenoid D stuck OFF
DETECTION CONDITION	• When any of DTC P0731, P0732, and P0733 not output (correct judgment), and all conditions below are satisfied. — ATF temperature **20 °C {68 °F} or above**. — Driving in 4GR at D range. — Engine run. — Turbine speed **within 225—4,988 rpm**. — Differential gear case (output) revolution speed **35 rpm or above**. — Vehicle speed **50 km/h {31 mph} or above**. — Throttle opening angle closed throttle position. — Revolution ratio of forward clutch drum revolution to differential gear case revolution **below 0.6 or 1.249 or above**. — Any of the following not generated: DTC P0500, P0706, P0707, P0708, P0712, P0713, P0715, P0751, P0752, P0753, P0756, P0757, P0758, P0761, P0762, P0763, P0766, P0767, P0767, P0768, P0771, P0772, P0773. **Diagnostic support note:** • This is a continuous monitor (CCM). • MIL illuminates if PCM detects the above malfunction condition in two consecutive drive cycles or in one drive cycle while the DTC for the same malfunction has been stored in the PCM. • PENDING CODE is available if PCM detects the above malfunction condition during first drive cycle. • FREEZE FRAME DATA is available. • HOLD indicator light flashes. • DTC is stored in the PCM memory.
POSSIBLE CAUSE	• ATF level low • Deteriorated ATF • Shift solenoid D stuck • Control valve stuck • PCM malfunction

Diagnostic procedure

STEP	INSPECTION		ACTION
1	**VERIFY FREEZE FRAME DATA HAS BEEN RECORDED** • Has FREEZE FRAME PID DATA been recorded?	Yes	Go to next step.
		No	Record FREEZE FRAME PID DATA on repair order, then go to next step.
2	**VERIFY RELATED REPAIR INFORMATION AVAILABILITY** • Check for related Service Bulletins availability. • Is any related repair information available?	Yes	Perform repair or diagnosis according to available repair information. • If vehicle is not repaired, go to next step.
		No	Go to next step.
3	**CHECK ATF CONDITION** • Turn ignition key to OFF. • Check ATF condition. — Clear red: Normal — Milky: Water mixed in fluid — Reddish brown: Deteriorated ATF • Is it okay? (See K–12 Automatic Transaxle Fluid (ATF) Condition Inspection.)	Yes	Go to next step.
		No	If ATF color milky or reddish brown, replace ATF, then go to Step 5. (See K–13 AUTOMATIC TRANSAXLE FLUID (ATF) REPLACEMENT.)
4	**CHECK ATF LEVEL** • Start engine. • Warm up ATX. • Is ATF level within specification? (See K–12 Automatic Transaxle Fluid (ATF) Level Inspection.)	Yes	Go to next step.
		No	Adjust ATF level, then go to Step 7. (See K–12 Automatic Transaxle Fluid (ATF) Level Inspection.)
5	**INSPECT LINE PRESSURE** • Start engine. • Measure line pressure. **Specification** **Idle: 330—470 kPa {3.4—4.7 kgf/cm^2, 49—66 psi}** **Stall: 1,200—1,360 kPa {12.3—13.8 kgf/cm^2, 175—196 psi}** • Is line pressure within specification? (See K–6 Line Pressure Test.)	Yes	Go to next step.
		No	• All ranges: Replace oil pump or control valve body, then go to Step 7. • Any ranges: Replace ATX, then go to Step 7. (See K–29 AUTOMATIC TRANSAXLE REMOVAL/INSTALLATION.) (See ATX Workshop Manual FN4A-EL (9999-95-FN4A-99).)

STEP	INSPECTION		ACTION
6	**CHECK OPERATION OF EACH VALVE AND EACH SPRING** • Turn ignition key to OFF. • Remove control valve body. • Disassemble control valve body. • Is each valve operation okay and is return spring okay? (See K–34 CONTROL VALVE BODY REMOVAL, K–35 CONTROL VALVE BODY INSTALLATION.) (See ATX Workshop Manual FN4A-EL (9999-95-FN4A-99).)	Yes	Replace ATX, then go to next step. (See K–29 AUTOMATIC TRANSAXLE REMOVAL/INSTALLATION.) (See ATX Workshop Manual FN4A-EL (9999-95-FN4A-99).)
		No	Repair or replace shift valve and return spring, then go to next step. (See K–34 CONTROL VALVE BODY REMOVAL, K–35 CONTROL VALVE BODY INSTALLATION.) (See ATX Workshop Manual FN4A-EL (9999-95-FN4A-99).)
7	**VERIFY TROUBLESHOOTING OF DTC P0766 COMPLETED** • Make sure to reconnect all disconnected connectors. • Clear DTC from memory using WDS or equivalent. • Start engine. • Warm up ATX. • Drive the vehicle under the following conditions and make sure that gears shift smoothly from 1GR to 4GR. — ATF temperature: **20 °C {68 °F} or above** — Drive in D range — Throttle opening angle (TP PID): **0%** (4GR only) — Vehicle speed: **50 km/h {31 mph} or above**. (4GR only) (VSS PID) • Is pending code present?	Yes	Replace PCM, then go to next step. (See F–43 PCM REMOVAL/INSTALLATION.)
		No	Go to next step.
8	**VERIFY AFTER REPAIR PROCEDURE** • Perform “After Repair Procedure”. (See K–52 AFTER REPAIR PROCEDURE.) • Are any DTCs present?	Yes	Go to applicable DTC inspection.
		No	Troubleshooting completed.

DTC P0767

A6E567001030W30

DTC P0767	Shift solenoid D stuck ON
DETECTION CONDITION	• When any of DTC P0731, P0732, P0734, and P0741 are not generated, and all conditions below are satisfied. — ATF temperature **20 °C {68 °F} or above**. — Driving in D range. — Engine run. — Turbine speed **within 225—4,988 rpm**. — Differential gear case (output) revolution speed **35 rpm or above**. — Revolution ratio of forward clutch drum revolution to differential gear case revolution **below 0.863 or 1.249 or above**. — Any of the following not generated: DTC P0500, P0706, P0707, P0708, P0712, P0713, P0715, P0751, P0752, P0753, P0756, P0757, P0758, P0761, P0762, P0763, P0766, P0767, P0767, P0768, P0771, P0772, P0773. **Diagnostic support note:** • This is a continuous monitor (CCM). • MIL illuminates if PCM detects the above malfunction condition in two consecutive drive cycles or in one drive cycle while the DTC for the same malfunction has been stored in the PCM. • PENDING CODE is available if PCM detects the above malfunction condition during first drive cycle. • FREEZE FRAME DATA is available. • HOLD indicator light flashes. • DTC is stored in the PCM memory.
POSSIBLE CAUSE	• ATF level low • Deteriorated ATF • Shift solenoid D stuck • Control valve stuck • PCM malfunction

Diagnostic procedure

STEP	INSPECTION		ACTION
1	**VERIFY FREEZE FRAME DATA HAS BEEN RECORDED** • Has FREEZE FRAME PID DATA been recorded?	Yes	Go to next step.
		No	Record FREEZE FRAME PID DATA on repair order, then go to next step.
2	**VERIFY RELATED REPAIR INFORMATION AVAILABILITY** • Check for related Service Bulletins availability. • Is any related repair information available?	Yes	Perform repair or diagnosis according to available repair information. • If vehicle is not repaired, go to next step.
		No	Go to next step.
3	**CHECK ATF CONDITION** • Turn ignition key to OFF. • Check ATF condition. — Clear red: Normal — Milky: Water mixed in fluid — Reddish brown: Deteriorated ATF • Is it okay? (See K–12 Automatic Transaxle Fluid (ATF) Condition Inspection.)	Yes	Go to next step.
		No	If ATF color milky or reddish brown, replace ATF, then go to Step 5. (See K–13 AUTOMATIC TRANSAXLE FLUID (ATF) REPLACEMENT.)
4	**CHECK ATF LEVEL** • Start engine. • Warm up ATX. • Is ATF level within specification? (See K–12 Automatic Transaxle Fluid (ATF) Level Inspection.)	Yes	Go to next step.
		No	Adjust ATF level, then go to Step 7. (See K–12 Automatic Transaxle Fluid (ATF) Level Inspection.)
5	**INSPECT LINE PRESSURE** • Start engine. • Measure line pressure. **Specification** **Idle: 330—470 kPa {3.4—4.7 kgf/cm^2, 49—66 psi}** **Stall: 1,200—1,360 kPa {12.3—13.8 kgf/cm^2, 175—196 psi}** • Is line pressure within specification? (See K–6 Line Pressure Test.)	Yes	Go to next step.
		No	• All ranges: Replace oil pump or control valve body, then go to Step 7. • Any ranges: Replace ATX, then go to Step 7. (See K–29 AUTOMATIC TRANSAXLE REMOVAL/INSTALLATION.) (See ATX Workshop Manual FN4A-EL (9999-95-FN4A-99).)
6	**CHECK OPERATION OF EACH VALVE AND EACH SPRING** • Turn ignition key to OFF. • Remove control valve body. • Disassemble control valve body. • Is each valve operation okay and is return spring okay? (See K–34 CONTROL VALVE BODY REMOVAL, K–35 CONTROL VALVE BODY INSTALLATION.) (See ATX Workshop Manual FN4A-EL (9999-95-FN4A-99).)	Yes	Replace ATX, then go to next step. (See K–29 AUTOMATIC TRANSAXLE REMOVAL/INSTALLATION.) (See ATX Workshop Manual FN4A-EL (9999-95-FN4A-99).)
		No	Repair or replace shift valve and return spring, then go to next step. (See K–34 CONTROL VALVE BODY REMOVAL, K–35 CONTROL VALVE BODY INSTALLATION.) (See ATX Workshop Manual FN4A-EL (9999-95-FN4A-99).)
7	**VERIFY TROUBLESHOOTING OF DTC P0767 COMPLETED** • Make sure to reconnect all disconnected connectors. • Clear DTC from memory using WDS or equivalent. • Start engine. • Warm up ATX. • Drive the vehicle under the following conditions and make sure that gears shift smoothly from 1GR to 4GR. — ATF temperature: **20 °C {68 °F} or above** — Drive in D range • Is pending code present?	Yes	Replace PCM, then go to next step. (See F–43 PCM REMOVAL/INSTALLATION.)
		No	Go to next step.
8	**VERIFY AFTER REPAIR PROCEDURE** • Perform “After Repair Procedure”. (See K–52 AFTER REPAIR PROCEDURE.) • Are any DTCs present?	Yes	Go to applicable DTC inspection.
		No	Troubleshooting completed.

K

DTC P0768

A6E567001030W31

DTC P0768	Shift solenoid D malfunction (electrical)
DETECTION CONDITION	• If PCM detects either of following conditions while driving in 4GR at D range, PCM determines that shift solenoid D circuit has a malfunction: — Shift solenoid D voltage is stuck at **B+** after engine start. — Shift solenoid D voltage is stuck at **0 V** after engine start. **Diagnostic support note:** • This is a continuous monitor (CCM). • MIL illuminates if PCM detects the above malfunction conditions during first drive cycle. • PENDING CODE is not available. • FREEZE FRAME DATA is available. • HOLD indicator light flashes. • DTC is stored in the PCM memory.
POSSIBLE CAUSE	• Shift solenoid D malfunction • Short to ground between ATX connector terminal B and PCM terminal 3S • Short to power between ATX connector terminal B and PCM terminal 3S • Open circuit between shift solenoid D terminal A and ATX connector terminal B • Open circuit between ATX connector terminal B and PCM terminal 3S • Damaged connector between shift solenoid D and PCM • PCM malfunction

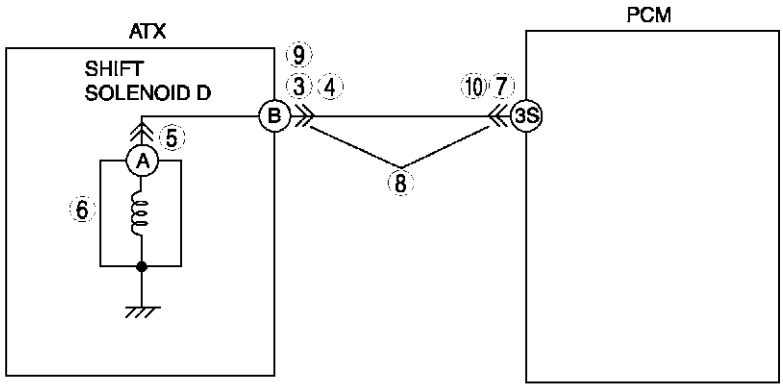

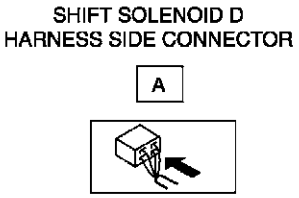

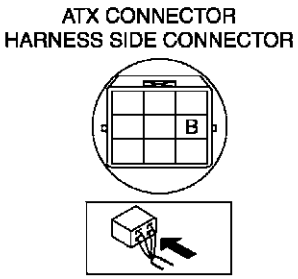

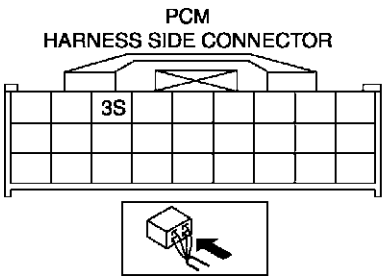

Diagnostic procedure

STEP	INSPECTION		ACTION
1	**VERIFY FREEZE FRAME DATA HAS BEEN RECORDED** • Has FREEZE FRAME PID DATA been recorded?	Yes	Go to next step.
		No	Record FREEZE FRAME PID DATA on repair order, then go to next step.

STEP	INSPECTION		ACTION
2	**VERIFY RELATED REPAIR INFORMATION AVAILABILITY** • Check for related Service Bulletins availability. • Is any related repair information available?	Yes	Perform repair or diagnosis according to available repair information. • If vehicle is not repaired, go to next step.
		No	Go to next step.
3	**INSPECT ATX CONNECTOR FOR POOR CONNECTION** • Turn ignition key to OFF. • Disconnect ATX connector. • Check for poor connection (damaged/pulled-out terminals, corrosion, etc.). • Is connection okay?	Yes	Go to next step.
		No	Repair or replace connector and/or terminals, then go to Step 11.
4	**INSPECT RESISTANCE** • Inspect resistance between ATX connector terminal B (transaxle case side) and body ground. • Is resistance **within 10.9—26.2 ohms**? (See K–26 Resistance Inspection (On-Vehicle Inspection).)	Yes	Go to Step 7.
		No	Go to next step.
5	**INSPECT SHIFT SOLENOID D CONNECTOR FOR POOR CONNECTION** • Disconnect shift solenoid D connector. • Check for poor connection (damaged/pulled-out terminals, corrosion, etc.). • Is connection okay?	Yes	Go to next step.
		No	Repair or replace connector and/or terminal, then go to Step 11.
6	**INSPECT RESISTANCE** • inspect resistance between shift solenoid D terminal A (part-side) and body ground. • Is resistance **within 10.9—26.2 ohms**? (See K–26 Resistance Inspection (On-Vehicle Inspection).)	Yes	Replace solenoid harness, then go to Step 11.
		No	Verify shift solenoid D installation. • If solenoid installed correctly, replace solenoid, then go to Step 11. (See K–28 SOLENOID VALVE REMOVAL/INSTALLATION.)
7	**INSPECT PCM CONNECTOR FOR POOR CONNECTION** • Disconnect PCM connector. • Check for poor connection (damaged/pulled-out terminals, corrosion, etc.). • Is connection okay?	Yes	Go to next step.
		No	Repair or replace connector and/or terminals, then go to Step 11.
8	**INSPECT ATX CONNECTOR CIRCUIT FOR OPEN** • Inspect for continuity between PCM terminal 3S (harness-side) and ATX connector terminal B (vehicle harness-side). • Is there continuity between terminals?	Yes	Go to next step.
		No	Repair or replace harness, then go to Step 11.
9	**INSPECT ATX CONNECTOR CIRCUIT FOR SHORT TO POWER** • Turn ignition key to ON (engine OFF). • Inspect voltage at ATX connector terminal B (vehicle harness-side). • Is voltage **0 V**?	Yes	Go to next step.
		No	Repair or replace harness, then go to Step 11.
10	**INSPECT PCM CIRCUIT FOR SHORT TO GROUND** • Turn ignition key to OFF. • Inspect continuity between PCM terminal 3S (harness-side) and body ground. • Is there continuity?	Yes	Repair or replace harness, then go to Step 11.
		No	Go to next step.
11	**VERIFY TROUBLESHOOTING OF DTC P0768 COMPLETED** • Make sure to reconnect all disconnected connectors. • Clear DTC from memory using WDS or equivalent. • Drive vehicle in D range and make sure that gears shift smoothly from 1GR to 4GR. • Are any DTCs present?	Yes	Replace PCM, then go to next step. (See F–43 PCM REMOVAL/INSTALLATION.)
		No	No concern is detected. Go to next step.
12	**VERIFY AFTER REPAIR PROCEDURE** • Perform “After Repair Procedure”. (See K–52 AFTER REPAIR PROCEDURE.) • Are any DTCs present?	Yes	Go to applicable DTC inspection.
		No	Troubleshooting completed.

DTC P0771

A6E567001030W32

DTC P0771	Shift solenoid E stuck OFF
DETECTION CONDITION	• When any of P0731, P0732, and P0734 are not generated, and all conditions below are satisfied. — ATF temperature **20 °C {68 °F} or above**. — Driving in 4GR at D range. — Engine run. — Turbine speed **within 225—4,988 rpm**. — Vehicle speed **within 60—100 km/h {37—62 mph}**. — TCC operation — Shift solenoid A duty value exceeds **99%** — Power or normal mode — Difference between engine speed and turbine speed **more than 100 rpm** — Any of the following not generated: DTC P0500, P0706, P0707, P0708, P0712, P0713, P0715, P0751, P0752, P0753, P0756, P0757, P0758, P0761, P0762, P0763, P0766, P0767, P0767, P0768, P0771, P0772, P0773. **Diagnostic support note:** • This is a continuous monitor (CCM). • MIL illuminates if PCM detects the above malfunction condition in two consecutive drive cycles or in one drive cycle while the DTC for the same malfunction has been stored in the PCM. • PENDING CODE is available if PCM detects the above malfunction condition during first drive cycle. • FREEZE FRAME DATA is available. • HOLD indicator light flashes. • DTC is stored in the PCM memory.
POSSIBLE CAUSE	• ATF level low • Deteriorated ATF • Shift solenoid E stuck • Control valve stuck • PCM malfunction

Diagnostic procedure

STEP	INSPECTION		ACTION
1	**VERIFY FREEZE FRAME DATA HAS BEEN RECORDED** • Has FREEZE FRAME PID DATA been recorded?	Yes	Go to next step.
		No	Record FREEZE FRAME PID DATA on repair order, then go to next step.
2	**VERIFY RELATED REPAIR INFORMATION AVAILABILITY** • Check for related Service Bulletins availability. • Is any related repair information available?	Yes	Perform repair or diagnosis according to available repair information. • If vehicle is not repaired, go to next step.
		No	Go to next step.
3	**CHECK ATF CONDITION** • Turn ignition key to OFF. • Check ATF condition. — Clear red: Normal — Milky: Water mixed in fluid — Reddish brown: Deteriorated ATF • Is it okay? (See K–12 Automatic Transaxle Fluid (ATF) Condition Inspection.)	Yes	Go to next step.
		No	If ATF color milky or reddish brown, replace ATF, then go to Step 5. (See K–13 AUTOMATIC TRANSAXLE FLUID (ATF) REPLACEMENT.)
4	**CHECK ATF LEVEL** • Start engine. • Warm up ATX. • Is ATF level within specification? (See K–12 Automatic Transaxle Fluid (ATF) Level Inspection.)	Yes	Go to next step.
		No	Adjust ATF level, then go to Step 7. (See K–12 Automatic Transaxle Fluid (ATF) Level Inspection.)
5	**INSPECT LINE PRESSURE** • Start engine. • Measure line pressure. **Specification** **Idle: 330—470 kPa {3.4—4.7 kgf/cm^2, 49—66 psi}** **Stall: 1,200—1,360 kPa {12.3—13.8 kgf/cm^2, 175—196 psi}** • Is line pressure within specification? (See K–6 Line Pressure Test.)	Yes	Go to next step.
		No	• All ranges: Replace oil pump or control valve body, then go to Step 7. • Any ranges: Replace ATX, then go to Step 7. (See K–29 AUTOMATIC TRANSAXLE REMOVAL/INSTALLATION.) (See ATX Workshop Manual FN4A-EL (9999-95-FN4A-99).)

STEP	INSPECTION		ACTION
6	**CHECK OPERATION OF EACH VALVE AND EACH SPRING** • Turn ignition key to OFF. • Remove control valve body. • Disassemble control valve body. • Is each valve operation okay and is return spring okay? (See K–34 CONTROL VALVE BODY REMOVAL, K–35 CONTROL VALVE BODY INSTALLATION.) (See ATX Workshop Manual FN4A-EL (9999-95-FN4A-99).)	Yes	Replace ATX, then go to next step. (See K–29 AUTOMATIC TRANSAXLE REMOVAL/INSTALLATION.) (See ATX Workshop Manual FN4A-EL (9999-95-FN4A-99).)
		No	Repair or replace shift valve and return spring, then go to next step. (See K–34 CONTROL VALVE BODY REMOVAL, K–35 CONTROL VALVE BODY INSTALLATION.) (See ATX Workshop Manual FN4A-EL (9999-95-FN4A-99).)
7	**VERIFY TROUBLESHOOTING OF DTC P0771 COMPLETED** • Make sure to reconnect all disconnected connectors. • Clear DTC from memory using WDS or equivalent. • Start engine. • Warm up ATX. • Drive the vehicle under the following conditions and make sure that gears shift smoothly from 1GR to 4GR. — ATF temperature: **20 °C {68 °F} or above** — Drive in D range — Vehicle speed: **within 60—100 km/h {37—62 mph}** (4th gear only). • Is pending code present?	Yes	Replace PCM, then go to next step. (See F–43 PCM REMOVAL/INSTALLATION.)
		No	Go to next step.
8	**VERIFY AFTER REPAIR PROCEDURE** • Perform “After Repair Procedure”. (See K–52 AFTER REPAIR PROCEDURE.) • Are any DTCs present?	Yes	Go to applicable DTC inspection.
		No	Troubleshooting completed.

DTC P0772

A6E567001030W33

DTC P0772	Shift solenoid E stuck ON
DETECTION CONDITION	• When any of DTC P0731, P0733, and P0734 are not generated, and all of following conditions satisfied under each of following throttle conditions. — ATF temperature **20 °C {68 °F} or above**. — Driving in 4GR at D range. — Engine run. — Turbine speed **within 225—4,988 rpm**. — Vehicle speed **below 70 km/h {43 mph}**. — Torque converter clutch (TCC) no operation — Difference between engine speed and turbine speed **below 50 rpm** • Throttle conditions. — Throttle opening angle (TP PID) **above 10.1%** and **5 seconds or more** have passed. — Throttle opening angle (TP PID) **within 3.1—10.1%** and **3 seconds or more** have passed. — Throttle opening angle at closed throttle position and **5 seconds or more** have passed. **Diagnostic support note:** • This is a continuous monitor (CCM). • MIL illuminates if PCM detects the above malfunction condition in two consecutive drive cycles or in one drive cycle while the DTC for the same malfunction has been stored in the PCM. • PENDING CODE is available if PCM detects the above malfunction condition during first drive cycle. • FREEZE FRAME DATA is available. • HOLD indicator light flashes. • DTC is stored in the PCM memory.
POSSIBLE CAUSE	• ATF level low • Deteriorated ATF • Shift solenoid E stuck • Control valve stuck • PCM malfunction

Diagnostic procedure

STEP	INSPECTION		ACTION
1	**VERIFY FREEZE FRAME DATA HAS BEEN RECORDED** • Has FREEZE FRAME PID DATA been recorded?	Yes	Go to next step.
		No	Record FREEZE FRAME PID DATA on repair order, then go to next step.
2	**VERIFY RELATED REPAIR INFORMATION AVAILABILITY** • Check for related Service Bulletins availability. • Is any related repair information available?	Yes	Perform repair or diagnosis according to available repair information. • If vehicle is not repaired, go to next step.
		No	Go to next step.
3	**CHECK ATF CONDITION** • Turn ignition key to OFF. • Check ATF condition. — Clear red: Normal — Milky: Water mixed in fluid — Reddish brown: Deteriorated ATF • Is it okay? (See K–12 Automatic Transaxle Fluid (ATF) Condition Inspection.)	Yes	Go to next step.
		No	If ATF color milky or reddish brown, replace ATF, then go to Step 5. (See K–13 AUTOMATIC TRANSAXLE FLUID (ATF) REPLACEMENT.)
4	**CHECK ATF LEVEL** • Start engine. • Warm up ATX. • Is ATF level within specification? (See K–12 Automatic Transaxle Fluid (ATF) Level Inspection.)	Yes	Go to next step.
		No	Adjust ATF level, then go to Step 7. (See K–12 Automatic Transaxle Fluid (ATF) Level Inspection.)
5	**INSPECT LINE PRESSURE** • Start engine. • Measure line pressure. **Specification** **Idle: 330—470 kPa {3.4—4.7 kgf/cm^2, 49—66 psi}** **Stall: 1,200—1,360 kPa {12.3—13.8 kgf/cm^2, 175—196 psi}** • Is line pressure within specification? (See K–6 Line Pressure Test.)	Yes	Go to next step.
		No	• All ranges: Replace oil pump or control valve body, then go to Step 7. • Any ranges: Replace ATX, then go to Step 7. (See K–29 AUTOMATIC TRANSAXLE REMOVAL/INSTALLATION.) (See ATX Workshop Manual FN4A-EL (9999-95-FN4A-99).)
6	**CHECK OPERATION OF EACH VALVE AND EACH SPRING** • Turn ignition key to OFF. • Remove control valve body. • Disassemble control valve body. • Is each valve operation okay and is return spring okay? (See K–34 CONTROL VALVE BODY REMOVAL, K–35 CONTROL VALVE BODY INSTALLATION.) (See ATX Workshop Manual FN4A-EL (9999-95-FN4A-99).)	Yes	Replace ATX, then go to next step. (See K–29 AUTOMATIC TRANSAXLE REMOVAL/INSTALLATION.) (See ATX Workshop Manual FN4A-EL (9999-95-FN4A-99).)
		No	Repair or replace shift valve and return spring, then go to next step. (See K–34 CONTROL VALVE BODY REMOVAL, K–35 CONTROL VALVE BODY INSTALLATION.) (See ATX Workshop Manual FN4A-EL (9999-95-FN4A-99).)
7	**VERIFY TROUBLESHOOTING OF DTC P0772 COMPLETED** • Make sure to reconnect all disconnected connectors. • Clear DTC from memory using WDS or equivalent. • Start engine. • Warm up ATX. • Drive the vehicle under the following conditions and make sure that gears shift smoothly from 1GR to 4GR. — ATF temperature: **20 °C {68 °F} or above** — Drive in D range — Vehicle speed (VSS PID): **below 70 km/h {43 mph}** (4th gear only) • Is pending code present?	Yes	Replace PCM, then go to next step. (See F–43 PCM REMOVAL/INSTALLATION.)
		No	Go to next step.
8	**VERIFY AFTER REPAIR PROCEDURE** • Perform “After Repair Procedure”. (See K–52 AFTER REPAIR PROCEDURE.) • Are any DTCs present?	Yes	Go to applicable DTC inspection.
		No	Troubleshooting completed.

DTC P0773

A6E567001030W34

DTC P0773	Shift solenoid E malfunction (electrical)
DETECTION CONDITION	• If PCM detects either of following conditions while driving in 4GR at D range with TCC operation, PCM determines that shift solenoid E circuit has a malfunction: — Shift solenoid E voltage is stuck at **B+** after engine start. — Shift solenoid E voltage is stuck at **0 V** after engine start. **Diagnostic support note:** • This is a continuous monitor (CCM). • MIL illuminates if PCM detects the above malfunction conditions during first drive cycle. • PENDING CODE is not available. • FREEZE FRAME DATA is available. • HOLD indicator light flashes. • DTC is stored in the PCM memory.
POSSIBLE CAUSE	• Shift solenoid E malfunction • Short to ground between ATX connector terminal F and PCM terminal 3P • Short to power between ATX connector terminal F and PCM terminal 3P • Open circuit between shift solenoid E terminal A and ATX connector terminal F • Open circuit between ATX connector terminal F and PCM terminal 3P • Damaged connector between shift solenoid E and PCM • PCM malfunction

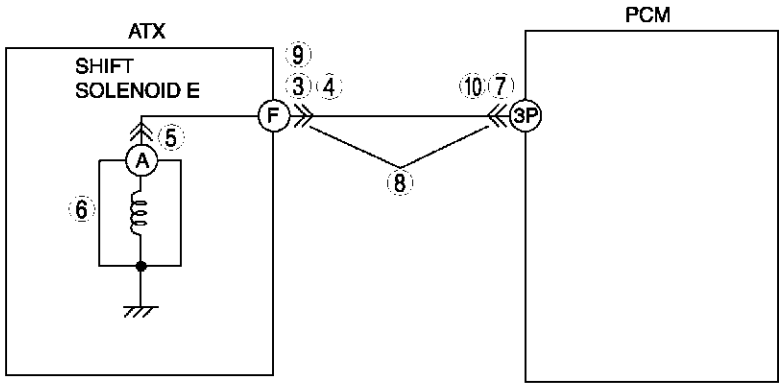

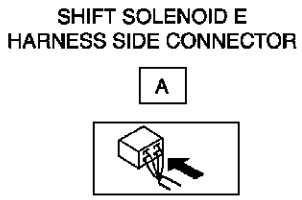

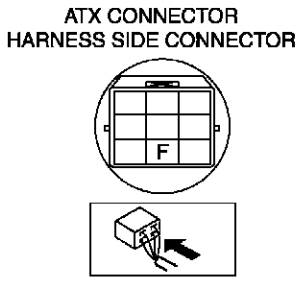

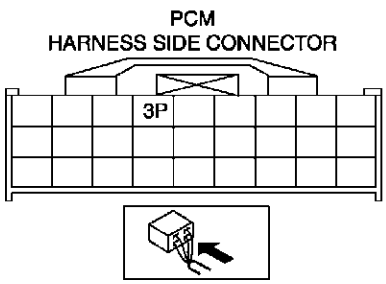

Diagnostic procedure

STEP	INSPECTION		ACTION
1	**VERIFY FREEZE FRAME DATA HAS BEEN RECORDED** • Has FREEZE FRAME PID DATA been recorded?	Yes	Go to next step.
		No	Record FREEZE FRAME PID DATA on repair order, then go to next step.
2	**VERIFY RELATED REPAIR INFORMATION AVAILABILITY** • Check for related Service Bulletins availability. • Is any related repair information available?	Yes	Perform repair or diagnosis according to available repair information. • If vehicle is not repaired, go to next step.
		No	Go to next step.

STEP	INSPECTION		ACTION
3	**INSPECT ATX CONNECTOR FOR POOR CONNECTION** • Turn ignition key to OFF. • Disconnect ATX connector. • Check for poor connection (damaged/pulled-out terminals, corrosion, etc.). • Is connection okay?	Yes	Go to next step.
		No	Repair or replace connector and/or terminals, then go to Step 11.
4	**INSPECT RESISTANCE** • Inspect resistance between ATX connector terminal F (transaxle case side) and body ground. • Is resistance **within 10.9—26.2 ohms**? (See K–26 Resistance Inspection (On-Vehicle Inspection).)	Yes	Go to Step 7.
		No	Go to next step.
5	**INSPECT SHIFT SOLENOID E CONNECTOR FOR POOR CONNECTION** • Disconnect shift solenoid E connector. • Check for poor connection (damaged/pulled-out terminals, corrosion, etc.). • Is connection okay?	Yes	Go to next step.
		No	Repair or replace connector and/or terminal, then go to Step 11.
6	**INSPECT RESISTANCE** • Inspect resistance between shift solenoid E terminal A (part-side) and body ground. • Is resistance **within 10.9—26.2 ohms**? (See K–27 Resistance Inspection (Off-Vehicle Inspection).)	Yes	Replace solenoid harness, then go to Step 11.
		No	Verify shift solenoid E installation. • If solenoid installed correctly, replace solenoid, then go to Step 11. (See K–28 SOLENOID VALVE REMOVAL/INSTALLATION.)
7	**INSPECT PCM CONNECTOR FOR POOR CONNECTION** • Disconnect PCM connector. • Check for poor connection (damaged/pulled-out terminals, corrosion, etc.). • Is connection okay?	Yes	Go to next step.
		No	Repair or replace connector and/or terminals, then go to Step 11.
8	**INSPECT ATX CONNECTOR CIRCUIT FOR OPEN** • Inspect for continuity between PCM terminal 1 (harness-side) and ATX connector terminal F (vehicle harness-side). • Is there continuity between terminals?	Yes	Go to next step.
		No	Repair or replace harness, then go to Step 11.
9	**INSPECT ATX CONNECTOR CIRCUIT FOR SHORT TO POWER** • Turn ignition key to ON (engine OFF). • Inspect voltage at ATX connector terminal F (vehicle harness-side). • Is voltage **0 V**?	Yes	Go to next step.
		No	Repair or replace harness, then go to Step 11.
10	**INSPECT PCM CIRCUIT FOR SHORT TO GROUND** • Turn ignition key to OFF. • Inspect for continuity between PCM terminal 1 (harness-side) and body ground. • Is there continuity?	Yes	Repair or replace harness, then go to Step 11.
		No	Go to next step.
11	**VERIFY TROUBLESHOOTING OF DTC P0773 COMPLETED** • Make sure to reconnect all disconnected connectors. • Clear DTC from memory using WDS or equivalent. • Drive vehicle in D range and make sure that gears shift smoothly from 1GR to 4GR. • Are any DTCs present?	Yes	Replace PCM, then go to next step. (See F–43 PCM REMOVAL/INSTALLATION.)
		No	No concern is detected. Go to next step.
12	**VERIFY AFTER REPAIR PROCEDURE** • Perform “After Repair Procedure”. (See K–52 AFTER REPAIR PROCEDURE.) • Are any DTCs present?	Yes	Go to applicable DTC inspection.
		No	Troubleshooting completed.

DTC P0841

A6E567001030W35

DTC P0841	Oil pressure switch circuit malfunction
DETECTION CONDITION	• When each of DTC P0731, P0732, P0733 and P0734 are not generated and **10 seconds or more** passed. — When all conditions below satisfied while driving in 1GR, 2GR or 3GR. • ATF temperature **20 °C {68 °F} or above**. • Oil pressure switch OFF • Revolution ratio of forward clutch drum revolution to differential gear case revolution **below 0.91 or more than 3.08**. • Any of the following not generated: DTC P0500, P0706, P0707, P0708, P0712, P0713, P0715, P0751, P0752, P0753, P0756, P0757, P0758, P0761, P0762, P0763, P0766, P0767, P0768, P0771, P0772, P0773. — When all conditions below satisfied with driving in 4GR. • ATF temperature **20 °C {68 °F} or above**. • Oil pressure switch ON • Revolution ratio of forward clutch drum revolution to differential gear case revolution **below 0.64 or more than 0.82**. • Any of the following not generated: DTC P0500, P0706, P0707, P0708, P0712, P0713, P0715, P0751, P0752, P0753, P0756, P0757, P0758, P0761, P0762, P0763, P0766, P0767, P0768, P0771, P0772, P0773. **Diagnostic support note:** • This is a continuous monitor (CCM). • MIL illuminates if PCM detects the above malfunction condition in two consecutive drive cycles or in one drive cycle while the DTC for the same malfunction has been stored in the PCM. • PENDING CODE is not available. • FREEZE FRAME DATA is not available. • HOLD indicator light flashes. • DTC is stored in the PCM memory.
POSSIBLE CAUSE	• Oil pressure switch malfunction • Open circuit between oil pressure switch terminal A and PCM terminal 3T • Short to ground between oil pressure switch terminal A and PCM terminal 3T • Damaged connector between oil pressure switch and PCM • PCM malfunction

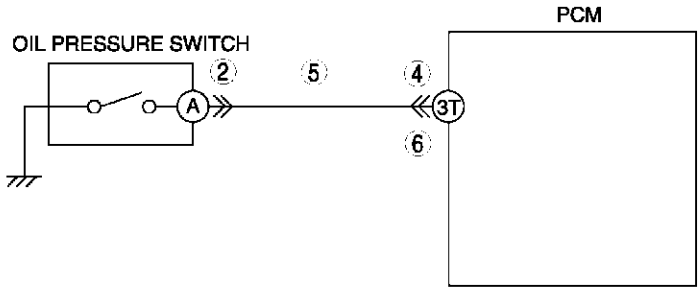

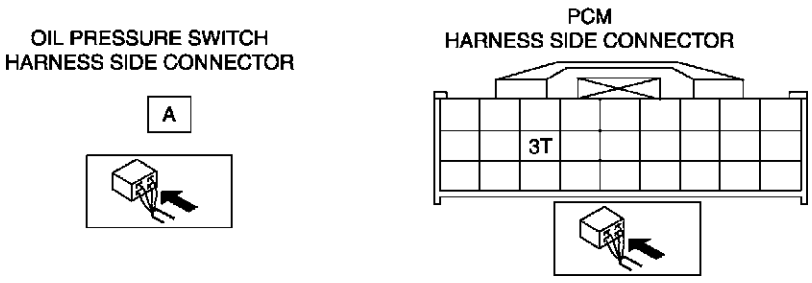

Diagnostic procedure

STEP	INSPECTION		ACTION
1	**VERIFY FREEZE FRAME DATA HAS BEEN RECORDED** • Has FREEZE FRAME PID DATA been recorded?	Yes	Go to next step.
		No	Record FREEZE FRAME PID DATA on repair order, then go to next step.

STEP	INSPECTION		ACTION
2	**INSPECT OIL PRESSURE SWITCH CONNECTOR FOR POOR CONNECTION** • Disconnect shift oil pressure switch connector. • Check for poor connection (damaged/pulled-out terminals, corrosion, etc.). • Is connection okay?	Yes	Go to next step.
		No	Repair or replace connector and/or terminal, then go to Step 7.
3	**INSPECT CONTINUITY** • inspect for continuity between oil pressure switch terminal A (part-side) and body ground. • Is there any continuity?	Yes	Replace oil pressure switch, then go to Step 7. (See K–23 OIL PRESSURE SWITCH REMOVAL/INSTALLATION.)
		No	Go to next step.
4	**INSPECT PCM CONNECTOR FOR POOR CONNECTION** • Disconnect PCM connector. • Check for poor connection (damaged/pulled-out terminals, corrosion, etc.). • Is connection okay?	Yes	Go to next step.
		No	Repair or replace connector and/or terminals, then go to Step 7.
5	**INSPECT OIL PRESSURE SWITCH CIRCUIT FOR OPEN** • Inspect for continuity between PCM terminal 3T (harness-side) and ATX connector terminal A (harness-side). • Is there continuity between terminals?	Yes	Go to next step.
		No	Repair or replace harness, then go to Step 7.
6	**INSPECT PCM CIRCUIT FOR SHORT TO GROUND** • Turn ignition key to OFF. • Inspect continuity between PCM terminal 3T (harness-side) and body ground. • Is there continuity?	Yes	Repair or replace harness, then go to next step.
		No	Replace oil pressure switch, then go to next step. (See K–23 OIL PRESSURE SWITCH REMOVAL/INSTALLATION.)
7	**VERIFY TROUBLESHOOTING OF DTC P0841 COMPLETED** • Make sure to reconnect all disconnected connectors. • Clear DTC from memory using WDS or equivalent. • Drive vehicle and make sure that gears shift smoothly from 1GR to 4GR. • Are any DTCs present?	Yes	Replace PCM, then go to next step. (See F–43 PCM REMOVAL/INSTALLATION.)
		No	No concern is detected. Go to next step.
8	**VERIFY AFTER REPAIR PROCEDURE** • Perform “After Repair Procedure”. (See K–52 AFTER REPAIR PROCEDURE.) • Are any DTCs present?	Yes	Go to applicable DTC inspection.
		No	Troubleshooting completed.

PID/DATA MONITOR INSPECTION

A6E567001030W36

1. Connect the WDS or equivalent to the DLC-2.
2. Measure the PID value.

Note

- Perform part inspection for the output device after PCM inspection.
- The PID/DATA MONITOR function monitors the calculated value of the input/output signals in the PCM. Therefore, if a monitored value of an output device is out of specification, it is necessary to inspect the monitored value of the input device related to the output device control. Since an output device malfunction is not directly indicated as a malfunction of the monitored value for the output device, it is necessary to inspect the output device individually using the simulation function, etc.

PID/DATA MONITOR AND RECORD function table

Monitor item (Definition)	Unit/ Condition		Condition/Specification	Action	PCM terminal
GEAR	—		1GR: 1 2GR: 2 3GR: 3 4GR: 4	Inspect following PIDs: SSA/SS1, SSB/SS2, SSC/SS3, SSD/SS4, SSE/SS5	3P, 3S, 3Y, 4Y, 4AB, 4AC
LINEDES	kPa	inHg	Indicates target line pressure	Inspect following PIDs: TFT, TFT V, VPWR, TP, TSS, VSS, TR	3V, 3Y
LPS (Pressure control solenoid)	%		Change current value according to throttle opening angle	Inspect pressure control solenoid. (See K–26 SOLENOID VALVE INSPECTION.)	3V, 3Y
OP SW B (Oil pressure switch)	ON/OFF		1, 2 or 3GR: ON Other: OFF	Inspect oil pressure switch inspection. (See K–21 OIL PRESSURE SWITCH INSPECTION.)	3T
SSA/SS1 (Shift solenoid A)	%		4GR: **99%** others: **0%**	Inspect shift solenoid A. (See K–26 SOLENOID VALVE INSPECTION.)	4AB
SSB/SS2 (Shift solenoid B)	%		1GR at D range: **99%** Others: **0%**	Inspect shift solenoid B. (See K–26 SOLENOID VALVE INSPECTION.)	4AC
SSC/SS3 (Shift solenoid C)	%		1GR/2GR: **99%** Others: **0%**	Inspect shift solenoid C. (See K–26 SOLENOID VALVE INSPECTION.)	4Y
TCS (HOLD switch)	ON/OFF		HOLD switch pressed: ON HOLD switch released: OFF	Inspect HOLD switch. (See K–13 HOLD SWITCH INSPECTION.)	3Q
TFT (Transaxle fluid temperature)	°C	°F	Indicates transaxle fluid temperature	Inspect TFT sensor. (See K–19 TRANSAXLE FLUID TEMPERATURE (TFT) SENSOR INSPECTION.)	3D
TFTV (Transaxle fluid signal voltage)	V		ATF **20 °C {68 °F}**: **3.4—3.6 V** ATF **130 °C {266 °F}**: **0.4—0.5 V**	Inspect TFT sensor. (See K–19 TRANSAXLE FLUID TEMPERATURE (TFT) SENSOR INSPECTION.)	3D
THOP (Throttle position sensor)	%		CTP: **0%** WOT:**100%**	Inspect TP sensor. (See F–51 THROTTLE POSITION (TP) SENSOR INSPECTION.)	2A
TP (Throttle position sensor signal voltage)	V		CTP: **0.4—1.5 V** WOT: **4.0—5.0 V**	Inspect TP sensor. (See F–51 THROTTLE POSITION (TP) SENSOR INSPECTION.)	2A
TR (Transaxle range)	—		P position: P R position: R N position: N D range: D S range: S L range: L	Inspect TR switch. (See K–14 TRANSAXLE RANGE (TR) SWITCH INSPECTION.)	1W
TR SENS (TR switch)	V		P position: **4.34—4.79 V** R position: **3.83—4.18 V** N position: **3.05—3.50 V** D range: **2.23—2.66 V** S range: **1.46—1.84 V** L range: **0.80—1.09 V**	Inspect TR switch. (See K–14 TRANSAXLE RANGE (TR) SWITCH INSPECTION.)	1W
TSS (Input/turbine speed)	rpm		Ignition switch ON: **0 rpm** Idle: **700—800 rpm** (P, N position) Indicates Input/turbine speed	Inspect input/turbine speed sensor. (See K–23 INPUT/TURBINE SPEED SENSOR INSPECTION.)	3G, 3J
VPWR (Battery positive voltage)	V		Ignition switch ON: **B+** Engine running: **B+**	Inspect main relay. (See T–24 RELAY INSPECTION.) Inspect buttery. (See G–4 BATTERY INSPECTION.)	2Y, 2Z
VSS (Vehicle speed)	km/h	mph	Indicates vehicle speed	Inspect VSS. (See K–24 VEHICLE SPEEDOMETER SENSOR (VSS) INSPECTION.)	3C

K

TROUBLESHOOTING

FOREWORD

A6E568001030W01

- Refer to Section GI and thoroughly read and understand the basic flow of troubleshooting in order to properly perform the procedures.

BASIC INSPECTION

A6E568001030W02

STEP	INSPECTION		ACTION
1	Perform the mechanical system test. (See K–6 MECHANICAL SYSTEM TEST.) Is mechanical system okay?	Yes	Go to next step.
		No	Repair or replace any defective parts according to inspection result.
2	Turn IG SW to ON. When selector lever is moved, dose the selector illumination indicate synchronized position to lever location? Also, when other ranges are selected from N or P during idling, does vehicle moves **within 1—2 seconds**?	Yes	Go to next step.
		No	Inspect selector lever and TR switch. Repair or replace defected areas. (See K–45 SELECTOR LEVER INSPECTION.) (See K–14 TRANSAXLE RANGE (TR) SWITCH INSPECTION.) If selector lever and TR switch are okay, go to next step.
3	Inspect ATF color and condition. (See K–12 AUTOMATIC TRANSAXLE FLUID (ATF) INSPECTION.) Are ATF color and ordor normal?	Yes	Go to next step.
		No	Repair or replace any defective parts according to inspection result. Flush ATX and cooler line as necessary.
4	Perform line pressure test. (See K–6 Line Pressure Test.) Is line pressure okay?	Yes	Go to next step.
		No	Adjust accelerator cable as necessary. Repair or replace any defective parts according to inspection result.
5	Perform stall test. (See K–7 Stall Test.) Is stall speed okay?	Yes	Go to next step.
		No	Repair or replace any defective parts according to inspection result.
6	Inspect the value at the following PIDs using the WDS or equivalent. (See F–45 PCM INSPECTION.) • TFT • TFT V • VPWR • TR • TR SENS • ECT • TCS • RPM • TP • TSS • VSS Is PID value okay?	Yes	Perform symptom troubleshooting and follow procedures.
		No	Repair or replace any defective parts according to inspection result.

SYMPTOM TROUBLESHOOTING ITEM TABLE

A6E568001030W03

- Use the chart below to verify the symptoms of the trouble in order to diagnose the appropriate area.

No.	TROUBLESHOOTING ITEM	DESCRIPTION	PAGE
1	Vehicle does not move in D, S, L ranges, or in R position	Vehicle does not move when AP depressed.	(See K–117 NO.1 VEHICLE DOES NOT MOVE IN D, S, L RANGES, OR IN R POSITION.)
2	Vehicle moves in N position	Vehicle creeps in N position. Vehicle creeps if brake pedal is not depressed in N position.	(See K–117 NO.2 VEHICLE MOVES IN N POSITION.)
3	Vehicle moves in P position, or parking gear does not disengage when P position is disengaged	Vehicle rolls when on a downward slope and tires do not lock in P position. Tires locked when P position is disengaged, vehicle does not move in D, S, L ranges, and R position when AP depressed, and engine remains in stall condition.	(See K–118 NO.3 VEHICLE MOVES IN P POSITION, OR PARKING GEAR DOES NOT DISENGAGE WHEN P IS DISENGAGED.)
4	Excessive creep	Vehicle accelerates in D, S, L ranges, and R position without depressing accelerator pedal.	(See K–118 NO.4 EXCESSIVE CREEP.)
5	No creep at all	Vehicle does not move in D, S, L ranges, or R position when idling on flat paved road.	(See K–118 NO.5 NO CREEP AT ALL.)
6	Low maximum speed and poor acceleration	Vehicle acceleration poor at start. Delayed acceleration when accelerator pedal depressed while driving.	(See K–119 NO.6 LOW MAXIMUM SPEED AND POOR ACCELERATION.)
7	No shifting	Single shift range only. Sometimes is shifts correctly.	(See K–120 NO.7 NO SHIFTING.)
8	Does not shift to fourth gear (4GR)	Vehicle does not upshift from 3GR to 4GR even though vehicle speed is increased. Vehicle does not shift to 4GR even though accelerator pedal is released in D range at **60 km/h {37 mph}**.	(See K–120 NO.8 DOES NOT SHIFT TO FOURTH GEAR (4GR).)
9	Abnormal shifting	Shifts incorrectly (incorrect shift pattern).	(See K–122 NO.9 ABNORMAL SHIFTING.)
10	Frequent shifting	Downshifting occurs immediately even when accelerator pedal depressed slightly in D, S, L ranges except HOLD mode.	(See K–122 NO.10 FREQUENT SHIFTING.)
11	Shift point is high or low	Shift point considerably different from automatic shift diagram. Shift delays when accelerating. Shift occurs quickly when accelerating and engine speed does not increase.	(See K–122 NO.11 SHIFT POINT IS HIGH OR LOW.)
12	Torque converter clutch (TCC) non-operation	TCC does not operate when vehicle reaches TCC operation range.	(See K–123 NO.12 TORQUE CONVERTER CLUTCH (TCC) NON-OPERATION.)
13	No kickdown	Does not downshift when accelerator pedal fully depressed within kickdown range.	(See K–123 NO.13 NO KICKDOWN.)
14	Engine flares up or slips when upshifting or downshifting	When accelerator pedal is depressed for driveway, engine speed increases but vehicle speed increase slowly. When accelerator pedal is depressed while driving, engine speed increases but vehicle speed does not.	(See K–124 NO.14 ENGINE FLARES UP OR SLIPS WHEN UPSHIFTING OR DOWNSHIFTING.)
15	Engine flares up or slips when accelerating vehicle	Engine flares up when accelerator pedal is depressed for upshifting. Engine flares up suddenly when accelerator pedal is depressed for downshifting.	(See K–124 NO.15 ENGINE FLARES UP OR SLIPS WHEN ACCELERATING VEHICLE.)
16	Judder upon torque converter clutch (TCC) operation	Vehicle jolts when TCC is engaged.	(See K–125 NO.16 JUDDER UPON TORQUE CONVERTER CLUTCH (TCC) OPERATION.)
17	Excessive shift shock from N to D or N to R position/range	Strong shock is felt when shifting from N to D or N to R position/range at idle.	(See K–126 NO.17 EXCESSIVE SHIFT SHOCK FROM N TO D OR N TO R POSITION/RANGE.)

No.	TROUBLESHOOTING ITEM	DESCRIPTION	PAGE
18	Excessive shift shock is given when upshifting and downshifting	Excessive shift shock is felt when depressing accelerator pedal to accelerate at upshifting. During cruising, excessive shift shock is felt when depressing accelerator pedal at downshifting.	(See K–127 NO.18 EXCESSIVE SHIFT SHOCK IS FELT WHEN UPSHIFTING AND DOWNSHIFTING.)
19	Excessive shift shock on torque converter clutch (TCC)	Strong shock is felt when TCC engaged.	(See K–127 NO.19 EXCESSIVE SHIFT SHOCK ON TORQUE CONVERTER CLUTCH (TCC).)
20	Noise occurs at idle when vehicle is stopped in all positions/ranges	Transaxle is noisy in all positions and ranges when vehicle idling.	(See K–128 NO.20 NOISE OCCURS AT IDLE WHEN VEHICLE IS STOPPED IN ALL POSITIONS/RANGES.)
21	Noise occurs at idle when vehicle is stopped in D, S, L ranges, or in R position	Transaxle is noisy in driving ranges when vehicle idling.	(See K–128 NO.21 NOISE OCCURS AT IDLE WHEN VEHICLE IS STOPPED IN D, S, L RANGES, OR IN R POSITION.)
22	No engine braking in HOLD mode	Engine speed drops to idle but vehicle coasts when accelerator pedal is released during cruising at medium to high speeds. Engine speed drops to idle but vehicle coasts when accelerator pedal is released when in L range at low vehicle speed.	(See K–129 NO.22 NO ENGINE BRAKING IN HOLD MODE.)
23	Transaxle overheats	Burnt smell emitted from transaxle. Smoke is emitted from transaxle.	(See K–129 NO.23 TRANSAXLE OVERHEATS.)
24	Engine stalls when shifted to D, S, L ranges, or in R position	Engine stalls when shifting from N or P position to D, S, L ranges or R position at idle.	(See K–130 NO.24 ENGINE STALLS WHEN SHIFTED TO D, S, L RANGES, OR IN R POSITION.)
25	Engine stalls when driving at slow speeds or stopping	Engine stalls when brake pedal is depressed while driving at low speed or stopping.	(See K–130 NO.25 ENGINE STALLS WHEN DRIVING AT SLOW SPEEDS OR STOPPING.)
26	Starter does not work	Starter does not work even when P or N position is selected.	(See K–130 NO.26 STARTER DOES NOT WORK.)
27	HOLD indicator light does not illuminate when HOLD switch is turned ON	HOLD indicator light in dashboard does not illuminate when HOLD switch is turned on and IG SW at ON.	(See K–130 NO.27 HOLD INDICATOR LIGHT DOES NOT ILLUMINATE WHEN HOLD SWITCH IS TURNED TO ON.)
28	HOLD indicator light illuminates when HOLD switch is not turned ON	HOLD indicator light in dashboard illuminates even though HOLD switch turned off and IG SWat ON.	(See K–131 NO.28 HOLD INDICATOR LIGHT ILLUMINATES WHEN HOLD SWITCH IS NOT TURNED TO ON.)

QUICK DIAGNOSIS CHART

A6E568001030W04

No.	Item	Selector lever misadjusted	Parking mechanism malfunction	Not within line pressure specification	Idle speed is misadjusted	Excessive amount of ATF	Electrical system components													
							ATX outer parts													
							TP sensor		Input/turbine speed sensor		Vehicle speed sensor		ECT sensor		TR switch		HOLD switch		Brake switch	
	Symptom / Cause of trouble						Signal is not inputted	Malfunction signal is inputted	Signal is not inputted	Malfunction signal is inputted	Signal is not inputted	Malfunction signal is inputted	Signal is not inputted	Malfunction signal is inputted	Misadjusted	Not operating properly	Signal is not inputted	Malfunction signal is inputted	Always ON	Poor GND
1	Vehicle does not move in D, S, L ranges, or in R position	×		×		×														×
2	Vehicle moves in N position	×																		
3	Vehicle moves in P position, or parking gear does not disengage when P is disengaged	×																		
4	Excessive creep		×		×	×														
5	No creep at all			×		×	×	×	×	×	×	×								×
6	Low maximum speed and poor acceleration		×	×			×	×	×	×	×	×			×	×	×	×		×
7	No shifting			×			×	×	×	×	×	×					×	×		×
8	Does not shift to fourth gear (4GR)	×		×			×	×	×	×	×	×	×	×	×	×	×	×		×
9	Abnormal shifting	×		×		×	×	×	×	×	×	×			×	×				×
10	Frequent shifting			×			×	×	×	×	×	×								×
11	Shift point is high or low					×	×	×	×	×	×	×								×
12	Torque converter clutch (TCC) non-operation					×	×	×	×	×	×	×	×	×	×	×	×	×	×	×
13	No kickdown						×	×												×
14	Engine flares up or slips when upshifting or downshifting	×		×			×	×	×	×	×	×			×	×				×
15	Engine flares up or slips when accelerating vehicle	×		×			×	×	×	×	×	×			×	×				×
16	Judder upon torque converter clutch (TCC) operation			×			×	×	×	×	×	×								×
17	Excessive shift shock from N to D or N to R position/range	×		×	×		×	×	×	×	×	×								×
18	Excessive shift shock is felt when upshifting and downshifting			×			×	×	×	×	×	×								×
19	Excessive shift shock on torque converter clutch (TCC)			×			×	×	×	×	×	×								×
20	Noise occurs at idle when vehicle is stopped in all positions/ranges																			
21	Noise occurs at idle when vehicle is stopped in D, S, L ranges, or in R position																			
22	No engine braking in HOLD mode			×			×	×	×	×	×	×					×	×		×
23	Transaxle overheats			×		×														
24	Engine stalls when shifted to D, S, L ranges, or in R position				×				×	×										
25	Engine stalls when driving at slow speeds or stopping				×															
26	Starter does not work														×	×				
27	HOLD indicator light does not illuminate when HOLD switch is turned to ON																×	×		
28	HOLD indicator light illuminates when HOLD switch is not turned to ON																	×		

A6E5680W001

K

No.	Item	Signal is not inputted	Malfunction signal is inputted	Transaxle fluid temperature sensor	Shift solenoid D malfunction	Shift solenoid E malfunction	Shift solenoid A malfunction	Shift solenoid B malfunction	Shift solenoid C malfunction	Pressure control solenoid malfunction	Control valve is not operating properly	Forward accumulator is not operating properly	Servo apply accumulator is not operating properly	Pressure switch malfunction	Oil cooler is not operating properly	Slipping (Brake, clutch)	Burnt (Brake, clutch)	Torque converter is not operating properly	TCC burnt Inspection method
		Electrical system components									Hydraulic system components					Powertrain system			
		ATX outer parts																	
1	Vehicle does not move in D, S, L ranges, or in R position				×	×	×	×		×	×					×	×	×	
2	Vehicle moves in N position										×						×		
3	Vehicle moves in P position, or parking gear does not disengage when P is disengaged																		
4	Excessive creep																		
5	No creep at all		×		×		×	×	×	×	×					×	×	×	
6	Low maximum speed and poor acceleration	×	×		×	×	×	×	×	×	×					×	×	×	×
7	No shifting				×	×	×	×	×	×	×					×	×		
8	Does not shift to fourth gear (4GR)	×	×			×	×	×			×					×	×		
9	Abnormal shifting				×	×	×	×	×		×	×	×			×	×	×	
10	Frequent shifting															×	×		
11	Shift point is high or low															×			
12	Torque converter clutch (TCC) non−operation	×	×			×	×				×							×	×
13	No kickdown				×	×	×	×	×		×					×	×		
14	Engine flares up or slips when upshifting or downshifting				×	×	×	×	×	×	×					×	×		
15	Engine flares up or slips when accelerating vehicle		×		×	×	×		×	×	×					×	×		
16	Judder upon torque converter clutch (TCC) operation		×			×	×				×							×	×
17	Excessive shift shock from N to D or N to R position/range		×		×		×	×	×	×	×	×	×	×			×		
18	Excessive shift shock is felt when upshifting and downshifting	×	×		×	×	×	×	×	×	×	×	×	×		×	×		
19	Excessive shift shock on torque converter clutch (TCC)		×			×	×			×	×							×	×
20	Noise occurs at idle when vehicle is stopped in all positions/ranges																		
21	Noise occurs at idle when vehicle is stopped in D, S, L ranges, or in R position																		
22	No engine braking in HOLD mode				×	×			×		×					×	×		
23	Transaxle overheats	×	×								×				×				×
24	Engine stalls when shifted to D, S, L ranges, or in R position										×							×	×
25	Engine stalls when driving at slow speeds or stopping										×							×	×
26	Starter does not work																		
27	HOLD indicator light does not illuminate when HOLD switch is turned to ON																		
28	HOLD indicator light illuminates when HOLD switch is not turned to ON																		

Symptom / Cause of trouble

A6E5680W002

NO.1 VEHICLE DOES NOT MOVE IN D, S, L RANGES, OR IN R POSITION

A6E568001030W05

1	Vehicle does not move in D, S, L ranges, or in R position
DESCRIPTION	• Vehicle does not move when AP depressed.
POSSIBLE CAUSE	• If the vehicle does not move in D, S, L ranges or R position, basically, the malfunction is in the ATX. (Vehicle will move even with a malfunction in the PCM.) Since a malfunction is in the sensor circuit or output circuit is the cause of the malfunction in the ATX, inspect the sensors, output circuit, and the related harnesses. 1. Clutch slipped, worn (D, S, L ranges-Forward clutch, R position-Reverse clutch, Low and reverse brake) • Line pressure low • Shift solenoid D malfunction • Shift solenoid E malfunction • Shift solenoid A malfunction • Shift solenoid B malfunction • Pressure control solenoid malfunction • Body GND malfunction • Control valve body malfunction 2. Selector lever malfunction 3. Parking mechanism not properly operation 4. Torque converter malfunction **Note** • Before following troubleshooting steps, make sure that Automatic Transaxle On-Board Diagnostic and Automatic Transaxle Basic Inspection are conducted.

Diagnostic procedure

STEP	INSPECTION		ACTION
1	When vehicle is stopped on a flat, level road and engine is off, does vehicle move when pushed? (in D, S ranges or N, R positions and brake is released)	Yes	Go to next step.
		No	Check for parking mechanism. (See ATX workshop manual (FN4A-EL) [1623-10-98E].) (See ATX workshop manual supplement (FN4A-EL) [1746-1*-02C].)
2	Disconnect PCM. Is resistance between ground terminal at PCM connector and body ground **less than 5.0 ohms**?	Yes	Go to next step.
		No	Repair open ground circuit.
3	Check LPS PID value using WDS or equivalent. Is LPS PID value okay? (See F–45 PCM INSPECTION.)	Yes	Overhaul control valve body and repair or replace any defective parts. If problem remains, overhaul transaxle and repair or replace any defective parts. (See ATX workshop manual (FN4A-EL) [1623-10-98E].) (See ATX workshop manual supplement (FN4A-EL) [1746-1*-02C].)
		No	Repair or replace any defective parts.

NO.2 VEHICLE MOVES IN N POSITION

A6E568001030W06

2	Vehicle moves in N position
DESCRIPTION	• Vehicle creeps in N position. • Vehicle creeps if brake pedal is not depressed in N position.
POSSIBLE CAUSE	• If the vehicle moves in N position, basically, the malfunction is in the ATX. Since a malfunction in the sensor circuit or output circuit is the cause of the malfunction in the ATX, inspect the sensors, output circuit, and the related harnesses. 1. Clutch burned (Forward clutch) • Control valve body malfunction 2. Selector lever position disparity (Although the selector indicator shows N position, hydraulic circuit shows D range or R position) **Note** • Before following troubleshooting steps, make sure that Automatic Transaxle On-Board Diagnostic and Automatic Transaxle Basic Inspection are conducted.

Diagnostic procedure

STEP	INSPECTION		ACTION
1	Does vehicle creep when selector lever is moved slightly in N position?	Yes	Go to next step.
		No	Adjust selector lever. (See K–46 SELECTOR CABLE ADJUSTMENT.)

STEP	INSPECTION		ACTION
2	Disconnect PCM. Is resistance between ground terminal at PCM connector and body ground **less than 5.0 ohms**?	Yes	Go to next step.
		No	Repair open ground circuit. Reconnect PCM.
3	Check LPS PID value using WDS or equivalent. Is LPS PID value okay? (See F–45 PCM INSPECTION.)	Yes	Overhaul control valve body and repair or replace any defective parts. If problem remains, overhaul transaxle and repair or replace any defective parts. (See ATX workshop manual (FN4A-EL) [1623-10-98E].) (See ATX workshop manual supplement (FN4A-EL) [1746-1*-02C].)
		No	Repair or replace any defective parts.

NO.3 VEHICLE MOVES IN P POSITION, OR PARKING GEAR DOES NOT DISENGAGE WHEN P IS DISENGAGED

A6E568001030W07

3	**Vehicle moves in P position, or parking gear does not disengage when P is disengaged**
DESCRIPTION	• Vehicle rolls on a downward slope in P position. • Tires are locked when P is disengaged. Vehicle does not move in D, S, L ranges, and R position when AP is depressed, and engine remains in stall condition.
POSSIBLE CAUSE	1. Parking mechanism malfunction (May have effect on noise or shock from transaxle) 2. Improper adjustment of selector lever 3. If vehicle moves in N position, perform No.2 "Vehicle moves in N position"

NO.4 EXCESSIVE CREEP

A6E568001030W08

4	**Excessive creep**
DESCRIPTION	• Vehicle accelerates in D, S, L ranges, and R position without depressing accelerator pedal.
POSSIBLE CAUSE	1. Engine idle speed high (transaxle system is not cause of problem) 2. Go to No.7 “Fast idle/runs on” (See F–198 NO.7 SLOW RETURN TO IDLE.)

NO.5 NO CREEP AT ALL

A6E568001030W09

5	**No creep at all**
DESCRIPTION	• Either the transaxle is stuck in 3GR position, or there is clutch circuit slippage
POSSIBLE CAUSE	• Either transaxle is stuck in 3GR or 4GR position, or clutch circuit slippage due to a stuck 3–4 clutch is stuck. 1. Clutch burned • Line pressure low • Shift solenoid D malfunction • Shift solenoid A malfunction • Shift solenoid B malfunction • Shift solenoid C malfunction • Pressure control solenoid malfunction • Body GND malfunction • Control valve body malfunction 2. Transaxle fixed in 3GR (Operation of fail-safe function) • Short or open circuit in wiring • Poor connection of connector • The electronic parts of output and input system is malfunction 3. The engine torque is not start • Torque converter is malfunction **Note** • Before following troubleshooting steps, make sure that Automatic Transaxle On-Board Diagnostic and Automatic Transaxle Basic Inspection are conducted.

Diagnostic procedure

STEP	INSPECTION		ACTION
1	• Does vehicle creep in any range/position?	Yes	Go to next step.
		No	Inspect or adjust selector lever. (See K–46 SELECTOR LEVER REMOVAL/INSTALLATION.)

STEP	INSPECTION		ACTION
2	Check the value at the following PID using the WDS or equivalent. (See F–45 PCM INSPECTION.) • TP Is PID value okay?	Yes	Go to next step.
		No	Repair or replace any defective parts.
3	Disconnect PCM. Is resistance between ground terminal at PCM connector and body ground **less than 5.0 ohms**?	Yes	Go to next step.
		No	Repair open ground circuit.
4	Check LPS PID value. Is LPS PID value okay? (See F–45 PCM INSPECTION.)	Yes	Overhaul control valve body and repair or replace any defective parts. If problem remains, overhaul transaxle and repair or replace any defective parts. (See ATX workshop manual (FN4A-EL) [1623-10-98E].) (See ATX workshop manual supplement (FN4A-EL) [1746-1*-02C].)
		No	Repair or replace any defective parts.

NO.6 LOW MAXIMUM SPEED AND POOR ACCELERATION

A6E568001030W10

K

6	Low maximum speed and poor acceleration
DESCRIPTION	• Vehicle acceleration is poor at start. • Delayed acceleration when accelerator pedal is depressed while driving.
POSSIBLE CAUSE	• If the clutch is stuck or does not stay in 3GR, the malfunction is in engine circuit. 1. Clutch slipped, burned • Line pressure low • Shift solenoid D malfunction • Shift solenoid E malfunction • Shift solenoid A malfunction • Shift solenoid B malfunction • Shift solenoid C malfunction • Pressure control solenoid malfunction • Body GND malfunction • Control valve body malfunction 2. Signal malfunction • Vehicle speed sensor malfunction • Sensor GND malfunction • TP sensor malfunction • Input/turbine speed sensor malfunction 3. Transaxle fixed in 3GR (Operation of fail-safe function) • Short or open circuit in wiring • Poor connection of connector • The electronic parts of output and input system have malfunction 4. Insufficient starting torque (Suspected when in-gear condition, shift control and engine circuit are normal) • The torque converter have malfunction (Poor operation, stuck) 5. Engagement of TCC operation range (Operation of fail-safe function) • Transaxle fluid temperature sensor malfunction (Short or open circuit) 6. Transaxle fixed in HOLD mode • HOLD switch malfunction 7. TR switch adjustment incorrect **Note** • Before following troubleshooting steps, make sure that Automatic Transaxle On-Board Diagnostic and Automatic Transaxle Basic Inspection are conducted.

Diagnostic procedure

STEP	INSPECTION		ACTION
1	With ignition switch at ON, does HOLD indicator light indication correspond to HOLD switch operation?	Yes	Go to next step.
		No	Go to No.26 "HOLD INDICATOR LIGHT DOES NOT ILLUMINATE WHEN HOLD SWITCH IS TURNED ON.". No.27 "HOLD INDICATOR LIGHT ILLUMINATES WHEN HOLD SWITCH IS NOT TURNED ON."
2	Go to No.12 "Lack/loss of power". (See F–207 NO.12 LACK/LOSS OF POWER-ACCELERATION/CRUISE.) Does CIS system okay?	Yes	Go to next step.
		No	Repair or replace any defective parts.

STEP	INSPECTION		ACTION
3	Disconnect solenoid connector. Does vehicle operate as follows? **D, S ranges: 3GR (fixed) L range: 1GR (fixed)** **R position: Reverse**	Yes	Go to next step.
		No	Overhaul control valve body and repair or replace any defective parts. If problem remains, overhaul transaxle and repair or replace any defective parts. (See ATX workshop manual (FN4A-EL) [1623-10-98E].) (See ATX workshop manual supplement (FN4A-EL) [1746-1*-02C].)
4	Drive vehicle in D, S, and L ranges except HOLD mode. Does vehicle start from stop in first gear?	Yes	Go to next step.
		No	Check the value at the following PIDs using the WDS or equivalent. (See F–45 PCM INSPECTION.) • TP • VSS • TSS • TR Repair or replace any defective parts.
5	Check the value at the following PIDs using the WDS or equivalent. (See F–45 PCM INSPECTION.) • SSA/SS1 • SSB/SS2 • SSC/SS3 Are PID values okay?	Yes	Go to next step.
		No	Check the value at the following PIDs using the NGS tester. (See F–45 PCM INSPECTION.) • TP • VSS • TSS Repair or replace any defective parts.
6	Perform the stall test. (See K–7 Stall Test.) Is stall speed okay?	Yes	Reverify symptoms of malfunction.
		No	Overhaul transaxle and repair or replace any defective parts. (See ATX workshop manual (FN4A-EL) [1623-10-98E].) (See ATX workshop manual supplement (FN4A-EL) [1746-1*-02C].)

NO.7 NO SHIFTING

A6E568001030W11

7	**No shifting**
DESCRIPTION	• Single shift range only. • Sometimes it shifts correctly.
POSSIBLE CAUSE	• When the gear position is fixed in 3GR due to the fail-safe operation, the malfunction is in the ATX. • Perform malfunction diagnosis according to No.6 "Low maximum speed and poor acceleration". 1. Clutch slippage, burned • Line pressure low • Shift solenoid D malfunction • Shift solenoid E malfunction • Shift solenoid A malfunction • Shift solenoid B malfunction • Shift solenoid C malfunction • Pressure control solenoid malfunction • Body GND malfunction • Control valve body malfunction 2. Signal malfunction • Vehicle speed sensor malfunction • Sensor GND malfunction • TP sensor malfunction • Input/turbine speed sensor malfunction 3. Transaxle fixed in 3GR (Operation in fail-safe function) • Short or open circuit in wiring • Poor connection of connector • Disconnected shift solenoid connector • Poor ground of shift solenoid 4. Transaxle fixed in HOLD mode • HOLD switch malfunction

NO.8 DOES NOT SHIFT TO FOURTH GEAR (4GR)

A6E568001030W12

8	**Does not shift to fourth gear (4GR)**
DESCRIPTION	• Vehicle does not upshift from 3GR to 4GR even though vehicle speed increased. • Vehicle does not shift to 4GR even though accelerator pedal is released in D range at **60 km/h {37 mph}**.

POSSIBLE CAUSE	• Basically, TCC does not operate when fail-safe is operating. Verify the DTCs first. If the TCC operates when driving at high speeds only, malfunction (improper adjustment) is in the HOLD switch circuit or TR switch circuit. **Caution** • **If the TCC is stuck, inspect it. In addition, inspect the oil cooler for foreign particles which may have mixed in with the ATF.** 1. TCC piston slipped, burned • Line pressure low • TP sensor malfunction • Engine coolant temperature sensor malfunction • Vehicle speed sensor malfunction • Input/turbine speed sensor malfunction • Sensor GND malfunction 2. Transaxle fluid temperature sensor malfunction • Short or open circuit in wiring • Poor connection of connector • Sensor malfunction 3. TR switch malfunction • Short or open circuit in wiring • Poor connection of connector • Sensor malfunction • Selector lever adjustment incorrect • TR switch adjustment incorrect 4. Shift solenoid A, shift solenoid B, shift solenoid D valve malfunction • Short or open circuit in wiring • Poor connection of connector • Solenoid valve stuck 5. HOLD switch malfunction 6. Control valve body malfunction **Note** • Before following troubleshooting steps, make sure that Automatic Transaxle On-Board Diagnostic and Automatic Transaxle Basic Inspection are conducted.

K

Diagnostic procedure

STEP	INSPECTION		ACTION
1	With indicator switch at ON, does HOLD indicator light indication correspond to HOLD switch operation?	Yes	Go to next step.
		No	Go to No.26 "HOLD INDICATOR LIGHT DOES NOT ILLUMINATE WHEN HOLD SWITCH IS TURNED ON.", No.27 "HOLD INDICATOR LIGHT ILLUMINATES WHEN HOLD SWITCH IS NOT TURNED ON."
2	Check the value at the following PID using the WDS or equivalent. (See F–45 PCM INSPECTION.) • TFT • TFTV Is PID value okay?	Yes	Go to next step.
		No	Repair or replace any defective parts.
3	Check the value at the following PIDs using the NGS tester. (See F–45 PCM INSPECTION.) • SSA/SS1 • SSB/SS2 • SSC/SS3 Are PID values okay?	Yes	Overhaul control valve body and repair or replace any defective parts. If problem remains, overhaul transaxle and repair or replace any defective parts. (See ATX workshop manual (FN4A-EL) [1623-10-98E].) (See ATX workshop manual supplement (FN4A-EL) [1746-1*-02C].)
		No	Go to next step.
4	Disconnect PCM. Is resistance between ground terminal at PCM connector and body ground **less than 5.0 ohms**?	Yes	Check the value at the following PIDs using the WDS or equivalent. (See F–45 PCM INSPECTION.) • TR • TSS • VSS Repair or replace any defective parts.
		No	Repair open ground circuit. Reconnect PCM.

NO.9 ABNORMAL SHIFTING

A6E568001030W13

9	Abnormal shifting
DESCRIPTION	• Shift incorrectly (incorrect shift pattern).
POSSIBLE CAUSE	• There is a malfunction in the signal circuit which controls shifting (TP sensor, input/turbine speed sensor, vehicle speed sensor), the control valve is stuck, the accumulator (forward or servo apply) is stuck, or the clutch circuit is stuck. 1. Clutch slipped, burned • Line pressure low • Control valve body malfunction • Shift solenoid D malfunction • Shift solenoid E malfunction • Shift solenoid A malfunction • Shift solenoid B malfunction • Shift solenoid C malfunction • Body GND malfunction • Accelerator cable misadjustment 2. Signal malfunction • Vehicle speed sensor malfunction • Sensor GND malfunction • TP sensor malfunction or mis-adjustment • Input/turbine speed sensor malfunction 3. TR switch malfunction • Selector lever adjustment incorrect • TR sensor adjustment incorrect **Note** • Before following troubleshooting steps, make sure that Automatic Transaxle On-Board Diagnostic and Automatic Transaxle Basic Inspection are conducted.

Diagnostic procedure

STEP	INSPECTION		ACTION
1	Disconnect PCM Is resistance between ground terminal at PCM connector and body ground **less than 5.0 ohms**?	Yes	Go to next step.
		No	Repair open ground circuit. Reconnect PCM.
2	Check the value at the following PIDs using the WDS or equivalent. (See 3940 PCM INSPECTION.) • TP • TSS • VSS Is PID value okay?	Yes	Overhaul control valve body and repair or replace any defective parts. If problem remains, overhaul transaxle and repair or replace any defective parts. (See ATX workshop manual (FN4A-EL) [1623-10-98E].) (See ATX workshop manual supplement (FN4A-EL) [1746-1*-02C].)
		No	Repair or replace any defective parts.

NO.10 FREQUENT SHIFTING

A6E568001030W14

10	Frequent shifting
DESCRIPTION	• Downshifting occurs immediately even when accelerator pedal is depressed slightly in D, S, L ranges except HOLD mode.
POSSIBLE CAUSE	• The circuit which is the cause is basically the same as No.9 “Abnormal shifting”. However, a malfunction of the input signal to the TP sensor, input/turbine speed sensor, vehicle speed sensor (including the sensor GND, sensor harness and connector), or clutch slippage (clutch stuck, low pressure in line) may also be the cause.

NO.11 SHIFT POINT IS HIGH OR LOW

A6E568001030W15

11	Shift point is high or low
DESCRIPTION	• Shift point considerably different from automatic shift diagram. • Shift delays when accelerating. • Shift occurs quickly when accelerating and engine speed does not increase.
POSSIBLE CAUSE	• If the transaxle does not shift abnormally, there is a malfunction of the input signal to the TP sensor, input/turbine speed sensor, or vehicle speed sensor (including sensor GND). • If the engine speed is high or low, regardless normal shifting, inspect the tachometer. • Verify that the output signal of the TP sensor changes linearly.

NO.12 TORQUE CONVERTER CLUTCH (TCC) NON-OPERATION

A6E568001030W16

12	Torque converter clutch (TCC) non-operation
DESCRIPTION	• TCC does not operate when vehicle reaches TCC operation range.
POSSIBLE CAUSE	• Basically, the TCC does not operate when the fail-safe is operating. Verify the DTC first. **Caution** • **If the TCC is stuck, inspect it. In addition, inspect the oil cooler for foreign particles which may have mixed in with the ATF.** 1. TCC burned (1) Input sensor system malfunction • Transaxle fluid temperature sensor • Vehicle speed sensor • Input/turbine speed sensor • Sensor GND (2) Output solenoid valve system malfunction (Sticking) • Shift solenoid E malfunction • Shift solenoid A malfunction (3) Control valve body malfunction system (Poor operation, stuck) • TCC hydraulic pressure system 2. TP sensor malfunction (Not operating linear) 3. Input/turbine speed sensor or vehicle speed sensor malfunction 4. Brake switch malfunction (Always ON) 5. ECT sensor malfunction **Note** • Before following troubleshooting steps, make sure that Automatic Transaxle On-Board Diagnostic and Automatic Transaxle Basic Inspection are conducted.

Diagnostic procedure

STEP	INSPECTION		ACTION
1	With indicator switch at ON, does HOLD indicator light indication correspond to HOLD switch operation?	Yes	Go to next step.
		No	Go to No.26 "HOLD INDICATOR LIGHT DOES NOT ILLUMINATE WHEN HOLD SWITCH IS TURNED ON.", No.27 "HOLD INDICATOR LIGHT ILLUMINATES WHEN HOLD SWITCH IS NOT TURNED ON."
2	Check the value at the following PIDs using the WDS or equivalent. (See F–45 PCM INSPECTION.) • TP • VSS • TSS Are PID values okay?	Yes	Go to next step.
		No	Repair or replace any defective parts.
3	Disconnect PCM. Is resistance between ground terminal at PCM connector and body ground **less than 5.0 ohms**?	Yes	Go to next step.
		No	Repair open ground circuit.
4	Check resistance between shift solenoid A and E control circuit at PCM connector and control valve body connector. Check resistance between shift solenoid A and E circuit at PCM connector and control valve body connector. Are the resistances **less than 5.0 ohms**?	Yes	Go to next step.
		No	Repair shift solenoid A or E control. Reconnect PCM.
5	Inspect shift solenoid A and E. (See K–26 SOLENOID VALVE INSPECTION.) Are the shift solenoids operating properly?	Yes	Replace PCM.
		No	Overhaul control valve body and repair or replace any defective parts. If problem remains, overhaul transaxle and repair or replace any defective parts.(See ATX workshop manual (FN4A-EL) [1623-10-98E].) (See ATX workshop manual supplement (FN4A-EL) [1746-1*-02C].)

NO.13 NO KICKDOWN

A6E568001030W17

13	No kickdown
DESCRIPTION	• Does not downshift when accelerator pedal is fully depressed within kickdown range.
POSSIBLE CAUSE	• If transaxle does not downshift though shifting is normal, malfunction is in TP sensor circuit (including sensor GND, sensor harness and connector).

NO.14 ENGINE FLARES UP OR SLIPS WHEN UPSHIFTING OR DOWNSHIFTING

A6E568001030W18

14	Engine flares up or slips when upshifting or downshifting
DESCRIPTION	• When accelerator pedal is depressed for driveway, engine speed increases but vehicle speed increases slowly. • When accelerator pedal is depressed while driving, engine speed increases but vehicle does not.
POSSIBLE CAUSE	• There is clutch slip because clutch is stuck or line pressure is low. 1. Clutch stuck, slippage (forward clutch, 3–4 clutch, 2–4 brake band, one-way clutch) • Line pressure low • Shift solenoid D malfunction • Shift solenoid E malfunction • Shift solenoid A malfunction • Shift solenoid B malfunction • Shift solenoid C malfunction • Pressure control solenoid malfunction • Body GND malfunction • Accelerator cable misadjustment • Control valve body malfunction 2. Signal malfunction • Vehicle speed sensor malfunction • Sensor GND malfunction • TP sensor malfunction or mis-adjustment • Input/turbine speed sensor malfunction 3. Poor operation of mechanical pressure • Selector lever position disparity • TR switch position disparity **Note** • Before following troubleshooting steps, make sure that Automatic Transaxle On-Board Diagnostic and Automatic Transaxle Basic Inspection are conducted.

Diagnostic procedure

STEP	INSPECTION		ACTION
1	Is shift point okay?	Yes	Go to next step.
		No	Go to No.9 "ABNORMAL SHIFTING"
2	Check the value at the following PID using the WDS or equivalent. (See F–45 PCM INSPECTION.) • TP Is PID value okay?	Yes	Go to next step.
		No	Repair or replace any defective parts.
3	Disconnect PCM. Is resistance between ground terminal at PCM connector and body ground **less than 5.0 ohms**?	Yes	Go to next step.
		No	Repair open ground circuit. Reconnect PCM.
4	Check LPS PID value. Is LPS PID value okay? (See F–45 PCM INSPECTION.)	Yes	Overhaul control valve body and repair or replace any defective parts. If problem remains, overhaul transaxle and repair or replace any defective parts. (See ATX workshop manual (FN4A-EL) [1623-10-98E].) (See ATX workshop manual supplement (FN4A-EL) [1746-1*-02C].)
		No	Repair or replace any defective parts.

NO.15 ENGINE FLARES UP OR SLIPS WHEN ACCELERATING VEHICLE

A6E568001030W19

15	Engine flares up or slips when accelerating vehicle
DESCRIPTION	• Engine flares up when accelerator pedal is depressed for upshifting. • Engine flares up suddenly when accelerator pedal is depressed for downshifting.
POSSIBLE CAUSE	• The malfunction is basically the same as for No.14 "Engine flares up or slips when upshifting or downshifting". If conditions for No.14 worsen, the malfunction will develop to No.15.

NO.16 JUDDER UPON TORQUE CONVERTER CLUTCH (TCC) OPERATION

A6E568001030W20

16	Judder upon torque converter clutch (TCC) operation
DESCRIPTION	• Vehicle jolts when TCC is engaged.
POSSIBLE CAUSE	• Poor TCC engagement due to either slippage because the TCC is stuck or the line pressure is low **Caution** • **If the TCC is stuck, inspect it. In addition, inspect the oil cooler for foreign particles which may have mixed in with the ATF.** 1. Torque converter clutch piston slipped, burned • Line pressure high • Shift solenoid A malfunction • Control valve body malfunction • Body GND malfunction • Pressure control solenoid malfunction 2. Signal malfunction • Vehicle speed sensor malfunction • Sensor GND malfunction • TFT sensor malfunction • TP sensor malfunction or mis-adjustment • Input/turbine speed sensor malfunction 3. Torque converter malfunction **Note** • Before following troubleshooting steps, make sure that Automatic Transaxle On-Board Diagnostic and Automatic Transaxle Basic Inspection are conducted.

Diagnostic procedure

STEP	INSPECTION		ACTION
1	Check the value at the following PIDs using the WDS or equivalent. (See F–45 PCM INSPECTION.) • TSS Are PID values okay?	Yes	Go to next step.
		No	Repair or replace any defective parts.
2	Disconnect PCM. Is resistance between ground terminal at PCM connector and body ground **less than 5.0 ohms**?	Yes	Go to next step.
		No	Repair open ground circuit.
3	Check resistance between shift solenoid A control circuit at PCM connector and control valve body connector. Check resistance between shift solenoid A circuit at PCM connector and control valve body connector. Are the resistance **less than 5.0 ohms**?	Yes	Go to next step.
		No	Repair shift solenoid A circuit.
4	Inspect Shfit solenoid. (See K–26 SOLENOID VALVE INSPECTION.) Is the solenoid valve operating properly?	Yes	Go to next step.
		No	Overhaul control valve body and repair or replace any defective parts. If problem remains, overhaul transaxle and repair or replace any defective parts. (See ATX workshop manual (FN4A-EL) [1623-10-98E].) (See ATX workshop manual supplement (FN4A-EL) [1746-1*-02C].)
5	Check LPS PID value. Is LPS PID value okay? (See F–45 PCM INSPECTION.)	Yes	Overhaul control valve body and repair or replace any defective parts. If problem remains, overhaul transaxle and repair or replace any defective parts. (See ATX workshop manual (FN4A-EL) [1623-10-98E].) (See ATX workshop manual supplement (FN4A-EL) [1746-1*-02C].)
		No	Replace PCM.

NO.17 EXCESSIVE SHIFT SHOCK FROM N TO D OR N TO R POSITION/RANGE

A6E568001030W21

17	**Excessive shift shock from N to D or N to R position/range**
DESCRIPTION	• Strong shock felt when shifting from N to D or N to R position/range.
POSSIBLE CAUSE	• Shift shock may worsen when the fail-safe is operating. If no DTC is output, the shift shock may worsen due to poor operation of the control valve body or sticking of the clutch. 1. Clutch burned (N→D: Forward clutch, N→R: Reverse clutch or low and reverse brake) • Line pressure low, high • TP sensor malfunction • Vehicle speed sensor malfunction • Input/turbine speed sensor malfunction • Shift solenoid B malfunction • Shift solenoid D malfunction • Shift solenoid A malfunction • Shift solenoid C malfunction • Pressure control solenoid malfunction • Accelerator cable misadjustment • Control valve body malfunction • Sensor GND malfunction • Body GND malfunction 2. Poor hydraulic operation (Malfunction in range change) • Forward accumlator malfunction • Servo apply accumulator malfunction • Pressure switch malfunction 3. Idle speed high 4. Poor tightening torque of engine mount, exhaust mount 5. Poor operation of mechanical pressure • Selector lever position disparity **Note** • Before following troubleshooting steps, make sure that Automatic Transaxle On-Board Diagnostic and Automatic Transaxle Basic Inspection are conducted.

Diagnostic procedure

STEP	INSPECTION		ACTION
1	Does shift shock occur only when engine cold?	Yes	Go to next step.
		No	Go to Step 3.
2	Disconnect PCM. Is resistance between ground terminal at PCM connector and body ground **less than 5.0 ohms**?	Yes	Check the value at the following PIDs using the WDS or equivalent. (See F–45 PCM INSPECTION.) • TP • TFT • TFTV Repair or replace any defective parts.
		No	Repair open ground circuit. Reconnect PCM.
3	Perform the stall test. (See K–7 Stall Test.) Is stall speed okay?	Yes	Go to next step.
		No	Go to Step 5.
4	Check the value at the following PIDs using the WDS or equivalent. (See F–45 PCM INSPECTION.) • TR Is PID value okay?	Yes	Overhaul control valve body and repair or replace any defective parts. If problem remains, overhaul transaxle and repair or replace any defective parts. (See ATX workshop manual (FN4A-EL) [1623-10-98E].) (See ATX workshop manual supplement (FN4A-EL) [1746-1*-02C].)
		No	Repair or replace any defective parts.
5	Check the value at the following PID using the WDS or equivalent. (See F–45 PCM INSPECTION.) • TP Is PID value okay?	Yes	Go to next step.
		No	Repair or replace any defective parts.
6	Disconnect PCM. Is resistance between ground terminal at PCM connector and body ground **less than 5.0 ohms**?	Yes	Go to next step.
		No	Repair open ground circuit. Reconnect PCM.
7	Check LPS PID value. Is LPS PID value okay? (See F–45 PCM INSPECTION.)	Yes	Overhaul control valve body and repair or replace any defective parts. If problem remains, overhaul transaxle and repair or replace any defective parts. (See ATX workshop manual (FN4A-EL) [1623-10-98E].) (See ATX workshop manual supplement (FN4A-EL) [1746-1*-02C].)
		No	Repair or replace any defective parts.

NO.18 EXCESSIVE SHIFT SHOCK IS FELT WHEN UPSHIFTING AND DOWNSHIFTING

A6E568001030W22

18	Excessive shift shock is felt when upshifting and downshifting
DESCRIPTION	• Excessive shift shock felt when depressing accelerator pedal to accelerate at upshifting. During cruising, excessive shift shock is felt when depressing accelerator pedal at downshifting.
POSSIBLE CAUSE	• Shift shock may worsen when fail-safe is operating. The shift shock has worsened if the TP sensor, input/turbine speed sensor, or vehicle speed sensor signal malfunctions. 1. Clutch slipped, burned (Forward clutch, 2–4 brake band, 3–4 clutch) • Line pressure low, high • Shift solenoid D malfunction • Shift solenoid E malfunction • Shift solenoid A malfunction • Shift solenoid B malfunction • Shift solenoid C malfunction • Pressure control solenoid malfunction • Accelerator cable misadjustment • Control valve body malfunction • Body GND malfunction 2. Signal malfunction • Transaxle temperature sensor malfunction • Vehicle speed sensor malfunction • Sensor GND malfunction • TP sensor malfunction • Input/turbine speed sensor malfunction 3. Poor hydraulic operation (Malfunction in range change) • Pressure switch malfunction • Forward accumulator malfunction • Servo apply accumulator malfunction **Note** • Before following troubleshooting steps, make sure that Automatic Transaxle On-Board Diagnostic and Automatic Transaxle Basic Inspection are conducted.

Diagnostic procedure

STEP	INSPECTION		ACTION
1	Perform the stall test. (See K–7 Stall Test.) Is stall speed okay?	Yes	Go to next step.
		No	Repair or replace any defective parts.
2	Check the value at the following PIDs using the WDS or equivalent. (See F–45 PCM INSPECTION.) • TP V Is PID value okay?	Yes	Go to next step.
		No	Repair or replace any defective parts.
3	Disconnect PCM. Is resistance between ground terminal at PCM connector and body ground **less than 5.0 ohms**?	Yes	Go to next step.
		No	Repair open ground circuit. Reconnect PCM.
4	Check LPS PID value. Is LPS PID value okay? (See F–45 PCM INSPECTION.)	Yes	Overhaul control valve body and repair or replace any defective parts. If problem remains, overhaul transaxle and repair or replace any defective parts. (See ATX workshop manual (FN4A-EL) [1623-10-98E].) (See ATX workshop manual supplement (FN4A-EL) [1746-1*-02C].)
		No	Repair or replace any defective parts.

NO.19 EXCESSIVE SHIFT SHOCK ON TORQUE CONVERTER CLUTCH (TCC)

A6E568001030W23

19	Excessive shift shock on torque converter clutch (TCC)
DESCRIPTION	• Strong shock is felt when TCC engaged.
POSSIBLE CAUSE	• The troubleshooting flow is the same as No.16 “Judder upon TCC operation”.

K

NO.20 NOISE OCCURS AT IDLE WHEN VEHICLE IS STOPPED IN ALL POSITIONS/RANGES

A6E568001030W24

20	Noise occurs at idle when vehicle is stopped in all positions/ranges
DESCRIPTION	• Transaxle noisy in all positions and ranges when vehicle is idling.
POSSIBLE CAUSE	• The malfunction is in the oil pump which causes a high-pitched noise to be emitted from the transaxle at idle. **Note** • If a noise is emitted during shifting only, the malfunction is in shift solenoid D, E or shift solenoid A, B, C. If a noise is emitted during shifting at certain gears only or during deceleration only, it is gear noise. • Before following troubleshooting steps, make sure that Automatic Transaxle On-Board Diagnostic and Automatic Transaxle Basic Inspection are conducted.

Diagnostic procedure

STEP	INSPECTION		ACTION
1	Inspect engine condition. Is any engine concern (i. e. rough idle)?	Yes	Go to appropriate symptom troubleshooting. (See Section F.)
		No	Go to next step.
2	Does noise stop when solenoid connector is disconnected?	Yes	Go to next step.
		No	Overhaul control valve body and repair or replace any defective parts. If problem remains, overhaul transaxle and repair or replace any defective parts. (See ATX workshop manual (FN4A-EL) [1623-10-98E].) (See ATX workshop manual supplement (FN4A-EL) [1746-1*-02C].)
3	Check the value at the following PIDs using the WDS or equivalent. (See F–45 PCM INSPECTION.) • TP • VSS • TSS Are PID values okay?	Yes	Go to next step.
		No	Repair or replace any defective parts.
4	Disconnect PCM. Is resistance between ground terminal at PCM connector and body ground **less than 5.0 ohms**?	Yes	Go to next step.
		No	Repair open ground circuit. Reconnect PCM.
5	Check LPS PID value. Is LPS PID value okay? (See F–45 PCM INSPECTION.)	Yes	Overhaul control valve body and repair or replace any defective parts. If problem remains, overhaul transaxle and repair or replace any defective parts. (See ATX workshop manual (FN4A-EL) [1623-10-98E].) (See ATX workshop manual supplement (FN4A-EL) [1746-1*-02C].)
		No	Repair or replace any defective parts.

NO.21 NOISE OCCURS AT IDLE WHEN VEHICLE IS STOPPED IN D, S, L RANGES, OR IN R POSITION

A6E568001030W25

21	Noise occurs at idle when vehicle is stopped in D, S, L ranges, or in R position
DESCRIPTION	• Transaxle noisy in driving ranges when vehicle idling.
POSSIBLE CAUSE	• Although the malfunction is basically the same as No.20 "Noise occurs at idle when vehicle is stopped in all positions/ranges", other causes may be selector lever position disparity or TR switch position disparity.

NO.22 NO ENGINE BRAKING IN HOLD MODE

A6E568001030W26

22	No engine braking in hold mode
DESCRIPTION	• Engine speed drops to idle but vehicle coasts when accelerator pedal is released during cruising at medium to high speeds. • Engine speed drops to idle but vehicle coasts when accelerator pedal is released when in L range at low vehicle speed.
POSSIBLE CAUSE	1. Clutch slippage, burned (low and reverse brake) • Line pressure low • Shift solenoid D malfunction • Shift solenoid E malfunction • Shift solenoid C malfunction • Control valve body malfunction • Body GND malfunction 2. Signal malfunction • TP sensor malfunction • Vehicle speed sensor malfunction • Sensor GND malfunction • Input/turbine speed sensor malfunction 3. HOLD switch ON not judged by PCM (short, or open circuit, poor operation) • HOLD switch signal malfunction **Note** • Before following troubleshooting steps, make sure that Automatic Transaxle On-Board Diagnostic and Automatic Transaxle Basic Inspection are conducted.

Diagnostic procedure

STEP	INSPECTION		ACTION
1	• Do following symptoms concurrently occur? — Engine flares up or slips during acceleration. — Engine flares up or slips when shifting.	Yes	Go to symptom troubleshooting NO.14 "Engine flares up or slips when upshifting or downshifting" or No.15 "Engine flares up or slips when accelerating vehicle".
		No	Repeat basic inspection and repair or replace any defective parts according to inspection result. (See K–112 BASIC INSPECTION.)

NO.23 TRANSAXLE OVERHEATS

A6E568001030W27

23	Transaxle overheats
DESCRIPTION	• Burnt smell emitted from transaxle. • Smoke emitted from transaxle.
POSSIBLE CAUSE	• The malfunction is restricted to hindrance of coolant at the oil cooler. In addition, overheating of the transaxle may be caused by a malfunction of the transaxle fluid temperature sensor. 1. Burned (TCC) • Line pressure low • Control valve body malfunction • Accelerator cable misadjustment 2. Oil cooler malfunction (Foreign material mixed ATF) 3. Transaxle fluid temperature sensor malfunction 4. Excessive amount of ATF 5. Torque converter malfunction **Note** • Before following troubleshooting steps, make sure that Automatic Transaxle On-Board Diagnostic and Automatic Transaxle Basic Inspection are conducted.

Diagnostic procedure

STEP	INSPECTION		ACTION
1	• Inspect for bent, damage, corrosion or kinks of oil cooler pipes. • Are oil cooler pipes okay?	Yes	Go to next step.
		No	Replace any defective parts.
2	• Perform the stall test. (See K–7 Stall Test.) • Is stall speed okay?	Yes	Go to next step.
		No	Repair or replace any defective parts.
3	• Check the value at the following PID using the WDS or equivalent. (See F–45 PCM INSPECTION.) — TP • Is PID value okay?	Yes	Go to next step.
		No	Repair or replace any defective parts.

STEP	INSPECTION		ACTION
4	• Disconnect PCM. • Is resistance between ground terminal at PCM connector and body ground **less than 5.0 ohms**?	Yes	Go to next step.
		No	Repair open ground circuit. Reconnect PCM.
5	• Check LPS PID value. • Is LPS PID value okay? (See F–45 PCM INSPECTION.)	Yes	Overhaul control valve body and repair or replace any defective parts. If problem remains, overhaul transaxle and repair or replace any defective parts. (See ATX workshop manual (FN4A-EL) [1623-10-98E].) (See ATX workshop manual supplement (FN4A-EL) [1746-1*-02C].)
		No	Repair or replace any defective parts.

NO.24 ENGINE STALLS WHEN SHIFTED TO D, S, L RANGES, OR IN R POSITION

A6E568001030W28

24	Engine stalls when shifted to D, S, L ranges, or in R position
DESCRIPTION	• Engine stalls when shifting from N or P position to D, S, L ranges or R position at idle.
POSSIBLE CAUSE	• The malfunction is on the engine control side (i.e. IAC system). Otherwise, the malfunction is in the input/turbine speed sensor (engine sometimes starts) or TCC circuit (engine always stalls).

Diagnostic procedure

STEP	INSPECTION		ACTION
1	• Go to symptom troubleshooting No.10 “Low idle/stalls during deceleration”. (See F–202 NO.10 LOW IDLE/STALLS DURING DECELERATION.) • Is engine control system okay?	Yes	Repeat basic inspection and repair or replace any defective parts according to inspection result. (See K–112 BASIC INSPECTION.)
		No	Repair or replace any defective parts according to inspection results.

NO.25 ENGINE STALLS WHEN DRIVING AT SLOW SPEEDS OR STOPPING

A6E568001030W29

25	Engine stalls when driving at slow speeds or stopping
DESCRIPTION	• Engine stalls when brake pedal is depressed while driving at low speed or stopping.
POSSIBLE CAUSE	• The malfunction on engine control side (e.g. Fuel injection control, IAC system) Otherwise, the malfunction is in the control valve body, shift solenoid E or TCC.

Diagnostic procedure

STEP	INSPECTION		ACTION
1	• Go to symptom troubleshooting No.9 “Low idle/stalls during deceleration”. (See F–201 NO.9 FAST IDLE/RUNS ON.) • Does engine control system okay?	Yes	Go to next step.
		No	Repair or replace any defective parts according to inspection results.
2	• Go to symptom troubleshooting No.4 "Engine Stalls." (See F–189 NO.4 HARD TO START/LONG CRANK/ERRATIC START/ERRATIC CRANK.) • Is engine control system okay?	Yes	Repeat basic inspection and repair or replace any defective parts according to inspection result. (See K–112 BASIC INSPECTION.)
		No	Repair or replace any defective parts according to inspection results.

NO.26 STARTER DOES NOT WORK

A6E568001030W30

26	Starter does not work
DESCRIPTION	• Starter does not work even when P or N position.
POSSIBLE CAUSE	• Selector lever misadjustment • TR switch misadjustment • Open or short circuit in TR switch

NO.27 HOLD INDICATOR LIGHT DOES NOT ILLUMINATE WHEN HOLD SWITCH IS TURNED TO ON

A6E568001030W31

27	HOLD indicator light does not illuminate when HOLD switch is turned to ON
DESCRIPTION	• HOLD indicator light in dashboard does not illuminate when HOLD switch is turned on and IG SW at ON.
POSSIBLE CAUSE	• HOLD switch, HOLD indicator light or related wiring harness malfunction.

Diagnostic procedure

STEP	INSPECTION		ACTION
1	• Are other indicator lights illuminated with ignition switch is at ON?	Yes	Inspect meter fuse.
		No	Go to next step.
2	• Check the HOLD switch (See K–13 HOLD SWITCH INSPECTION.) • Is HOLD switch okay?	Yes	Go to next step.
		No	Repair or replace any defective parts.
3	• Disconnect PCM. • Turn ignition switch on. • Is voltage between 3Q terminal at the PCM connector and body ground **greater than 10.5 V**?	Yes	Replace PCM.
		No	Reconnect PCM. Go to next step.
4	• Check the HOLD indicator light. • Is HOLD indicator light okay?	Yes	Inspect for open circuit or disconnected connector in harness between the following: • Ignition switch and HOLD indicator light • HOLD indicator light and PCM
		No	Repair or replace any defective parts.

NO.28 HOLD INDICATOR LIGHT ILLUMINATES WHEN HOLD SWITCH IS NOT TURNED TO ON

A6E568001030W32

K

28	**HOLD indicator light illuminates when HOLD switch is not turned to ON**
DESCRIPTION	• HOLD indicator light in dashboard illuminates even though HOLD switch is turned off and IG SW at ON.
POSSIBLE CAUSE	• HOLD switch or related wiring harness malfunction.

Diagnostic procedure

STEP	INSPECTION		ACTION
1	• Check the HOLD switch (See K–13 HOLD SWITCH INSPECTION.) • Is HOLD switch okay?	Yes	Go to next step.
		No	Repair or replace any defective parts.
2	• Disconnect PCM. • Turn ignition switch off. • Is resistance between 3Q terminal at the PCM connector and body ground **greater than 10 kilohms**?	Yes	Replace PCM.
		No	Repair short circuit between HOLD indecator light and PCM. Reconnect PCM.

FRONT AND REAR AXLES

LOCATION INDEX M-2
FRONT AXLE/DRIVE SHAFT LOCATION INDEX M-2
REAR AXLE LOCATION INDEX M-3
GENERAL PROCEDURES M-3
PRECAUTION (FRONT AND REAR AXLE) M-3
FRONT AXLE M-4
WHEEL HUB, STEERING KNUCKLE PRE-INSPECTION M-4
WHEEL HUB BOLT REPLACEMENT M-4
WHEEL HUB, STEERING KNUCKLE REMOVAL/INSTALLATION M-5
REAR AXLE M-9
WHEEL HUB, HUB SPINDLE PRE-INSPECTION M-9
WHEEL HUB, HUB SPINDLE REMOVAL/INSTALLATION M-10
DRIVE SHAFT M-12
JOINT SHAFT PRE-INSPECTION M-12
JOINT SHAFT REMOVAL/INSTALLATION M-12
JOINT SHAFT DISASSEMBLY/ASSEMBLY M-14
DRIVE SHAFT PRE-INSPECTION M-16
DRIVE SHAFT REMOVAL/INSTALLATION M-17
DRIVE SHAFT (ATX) DISASSEMBLY/ASSEMBLY M-19
DRIVE SHAFT (MTX) DISASSEMBLY/ASSEMBLY M-24

LOCATION INDEX

FRONT AXLE/DRIVE SHAFT LOCATION INDEX

A6E630004000W01

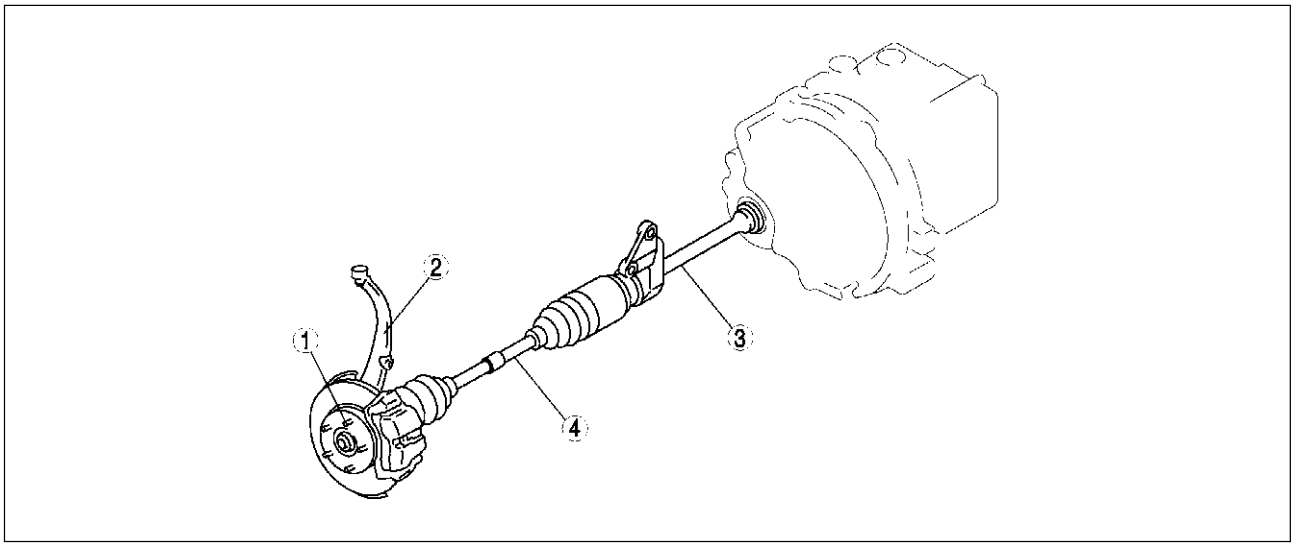

A6E0612W106

1	Hub bolt (See M–4 WHEEL HUB BOLT REPLACEMENT)
2	Wheel hub, steering knuckle (See M–4 WHEEL HUB, STEERING KNUCKLE PRE-INSPECTION) (See M–5 WHEEL HUB, STEERING KNUCKLE REMOVAL/INSTALLATION)
3	Joint shaft (See M–12 JOINT SHAFT PRE-INSPECTION) (See M–12 JOINT SHAFT REMOVAL/INSTALLATION) (See M–14 JOINT SHAFT DISASSEMBLY/ASSEMBLY)
4	Drive shaft (See M–16 DRIVE SHAFT PRE-INSPECTION) (See M–17 DRIVE SHAFT REMOVAL/INSTALLATION) (See M–19 DRIVE SHAFT (ATX) DISASSEMBLY/ASSEMBLY) (See M–24 DRIVE SHAFT (MTX) DISASSEMBLY/ASSEMBLY)

REAR AXLE LOCATION INDEX

A6E630005000W01

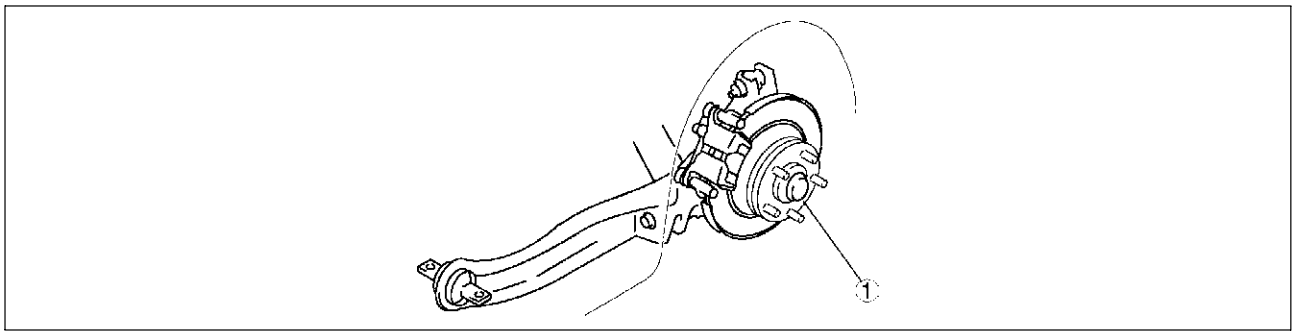

A6E0312W016

1	Wheel hub, hub spindle (See M–9 WHEEL HUB, HUB SPINDLE PRE-INSPECTION) (See M–10 WHEEL HUB, HUB SPINDLE REMOVAL/INSTALLATION)

GENERAL PROCEDURES

PRECAUTION (FRONT AND REAR AXLE)

A6E631001018W01

Wheel and Tire Removal/Installation

1. The removal and installation procedures for the wheels and tires are not mentioned in this section. When a wheel is removed, tighten it to **88—118 N·m {9.0—12.0 kgf·m, 65.0—87.0 ft·lbf}**

Brake Line Disconnection/Connection

Caution

- **Brake fluid will damage painted surfaces. If brake fluid gets on a painted surface, wipe it off immediately.**

1. Tighten the brake pipe flare nut using the **SST** (49 0259 770B). Be sure to modify the brake pipe flare nut tightening torque to allow for use of a torque wrench-**SST** combination. (See GI–16 TORQUE FORMULAS.)
2. If any brake line has been disconnected any time during the procedure, add brake fluid, bleed the brakes, and inspect for leakage after the procedure has been completed.

Suspension Arm Removal/Installation

1. Tighten any part of the suspension that uses rubber bushings only after vehicle has been lowered and unloaded.

Note

- Unloaded: Fuel tank is full. Engine coolant and engine oil are at specified level. Spare tire, jack, and tools are in designated position.

FRONT AXLE

WHEEL HUB, STEERING KNUCKLE PRE-INSPECTION

A6E631204000W01

Wheel Bearing Play Inspection

1. Position a dial indicator against the wheel hub.
2. Push and pull the wheel hub by hand in the axial direction and measure the wheel bearing play.

   Maximum wheel bearing play
   0.05 mm {0.002 in}

3. If the bearing play exceeds the specification, replace and tighten the locknut to the specified torque and retest.
   - Replace the wheel bearing as necessary.

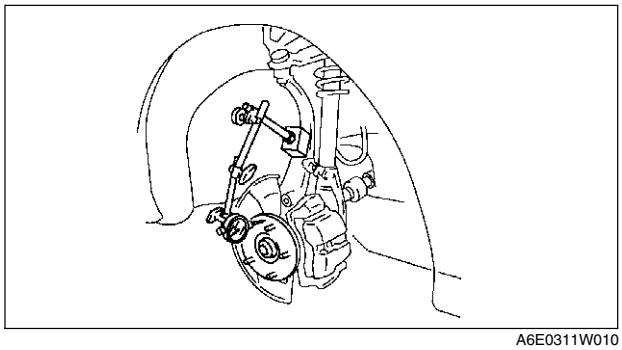

A6E0311W010

WHEEL HUB BOLT REPLACEMENT

A6E631233060W01

1. Remove the hub bolt using the **SSTs**.

   Note
   - If the dust cover interferes with the wheel hub bolt and the wheel hub bolt cannot be removed, tap the part shown in the figure with a chisel lightly and bend the processing point back to the steering knuckle side.

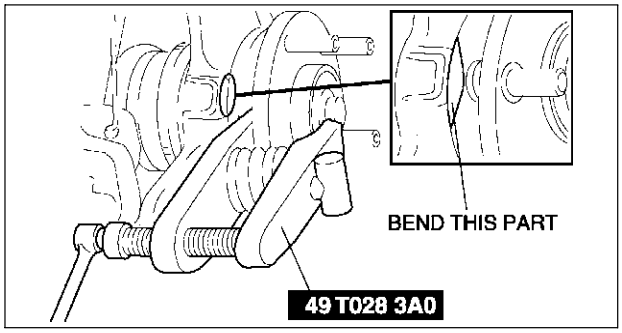

A6E0311W011

2. Install the hub bolt into the wheel hub and install a washer and hub nut on the hub bolt.

3. Tighten the hub nut while holding the wheel hub using a brass bar.

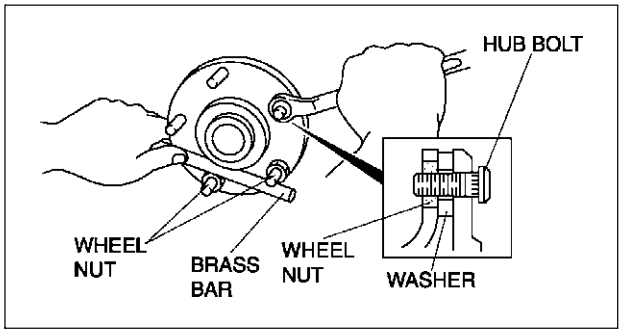

A6E0311W012

WHEEL HUB, STEERING KNUCKLE REMOVAL/INSTALLATION

A6E631204000W02

Caution

- **Performing the following procedures without first removing the ABS wheel-speed sensor may possibly cause an open circuit in the harness if it is pulled by mistake. Before performing the following procedures, remove the ABS wheel-speed sensor (axle side) and fix it to an appropriate place where the sensor will not be pulled by mistake while the vehicle is being serviced.**

1. Remove in the order indicated in the table.
2. Install in the reverse order of removal.
3. After installation, inspect the front wheel alignment. (See R–5 FRONT WHEEL ALIGNMENT.)

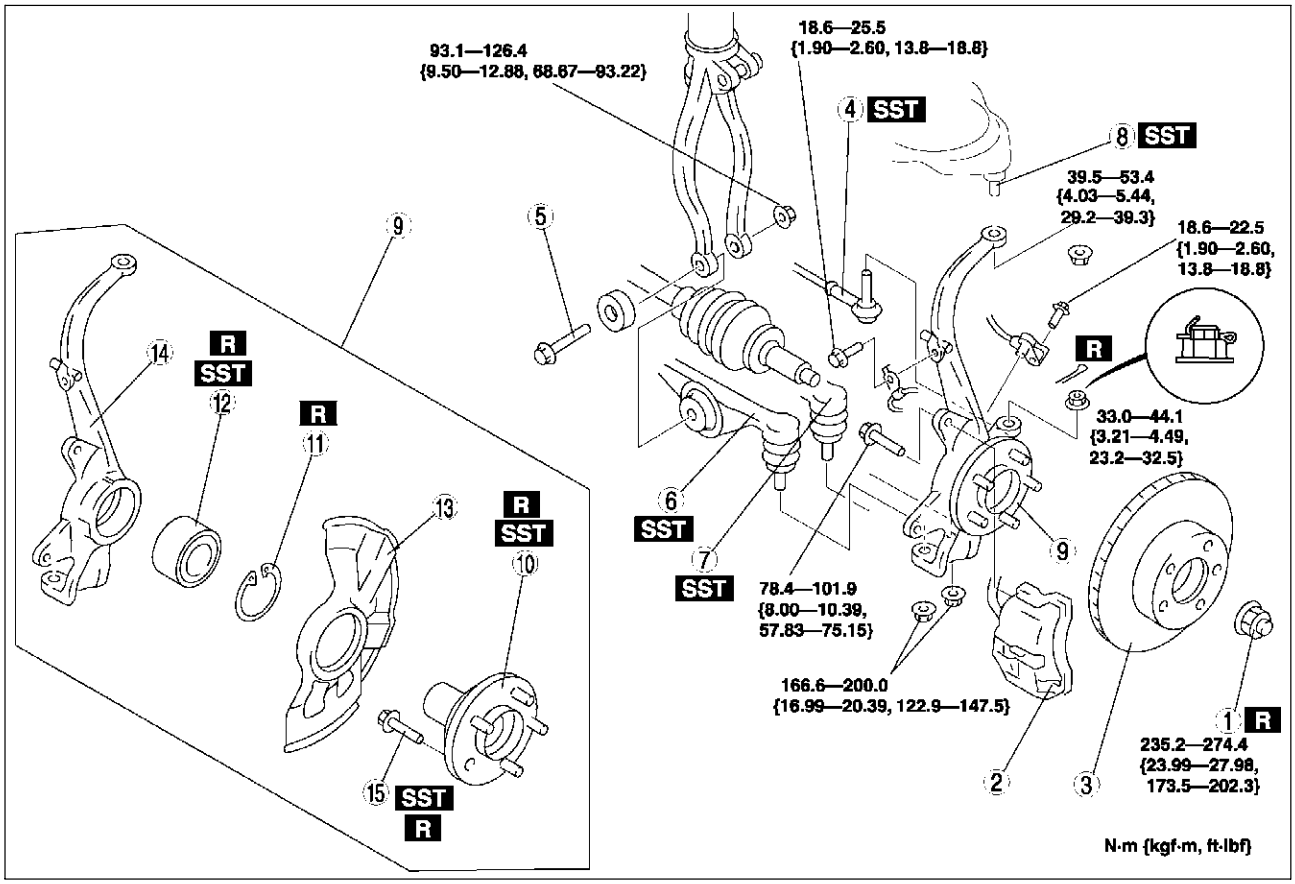

A6E0612W075

1	Locknut (See M–6 Locknut Removal Note) (See M–9 Locknut Installation Note)
2	Brake caliper component
3	Disc plate (See P–20 Disc Plate Removal Note)
4	Tie-rod end ball joint (See N–11 Tie-rod End Ball Joint Removal Note)
5	Bolt
6	Front lower arm (front) ball joint (See R–16 Front Lower Arm (Front) Ball Joint Removal Note)
7	Front lower arm (rear) ball joint (See R–19 Front Lower Arm (Rear) Ball Joint Removal Note)
8	Front upper arm ball joint (See R–13 Front Upper Arm Ball Joint Removal Note)

9	Wheel hub, steering knuckle, dust cover
10	Wheel hub component (See M–6 Wheel Hub Component Removal Note) (See M–8 Wheel Hub Component Installation Note)
11	Retaining ring
12	Wheel bearing (See M–6 Wheel Bearing Removal Note) (See M–8 Wheel Bearing Installation Note)
13	Dust cover (See M–7 Dust Cover Removal Note) (See M–8 Dust Cover Installation Note)
14	Steering knuckle
15	Hub bolt (See M–7 Hub Bolt Removal Note) (See M–7 Hub Bolt Installation Note)

Locknut Removal Note

1. Knock the crimped portion of the locknut outward using a small chisel and a hammer.
2. Lock the hub by applying the brakes.
3. Remove the locknut.

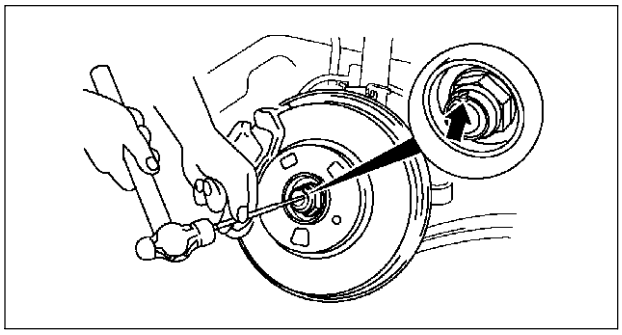

A6E6321W001

Wheel Hub Component Removal Note

1. Remove the wheel hub component using the **SSTs**.

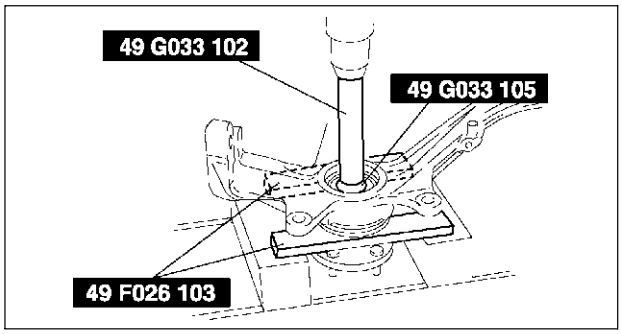

A6E0311W015

2. If the bearing inner race remains on the front wheel hub component, grind a section of the bearing inner race until **approx. 0.5 mm {0.02 in}** remains. Then remove it using a chisel.

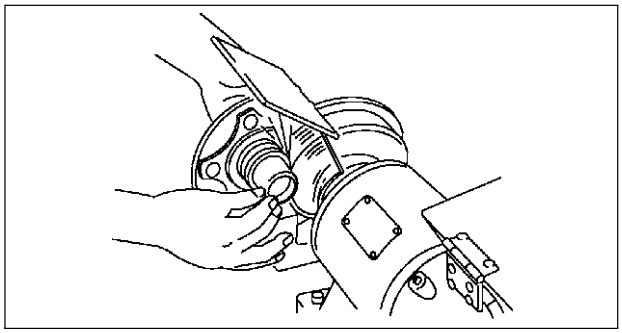

A6E6312W002

Wheel Bearing Removal Note

1. Remove the wheel bearing using the **SSTs**.

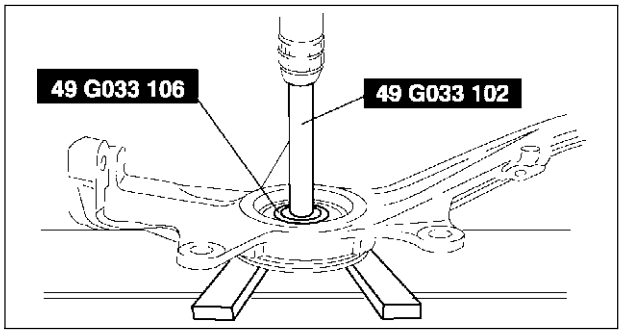

A6E0311W017

Dust Cover Removal Note

Note
- The dust cover does not need to be removed unless it is being replaced.

1. Mark the dust cover and steering knuckle for proper installation.

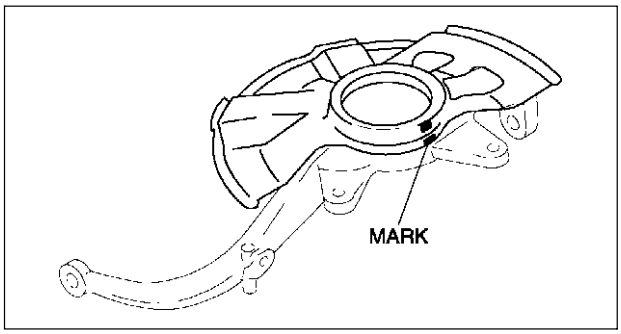

A6E0311W018

2. Remove the dust cover using a chisel.

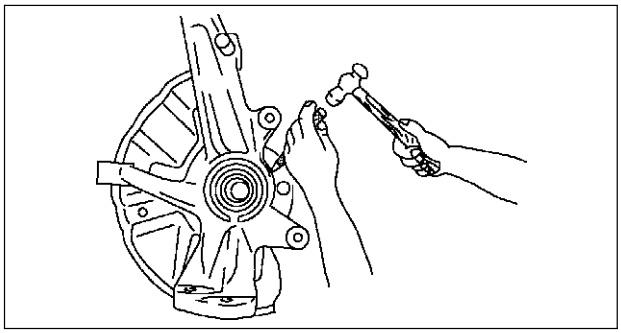

A6E0311W019

Hub Bolt Removal Note

Note
- The hub bolts do not need to be removed unless they are being replaced.

1. Remove the hub bolts using a press.

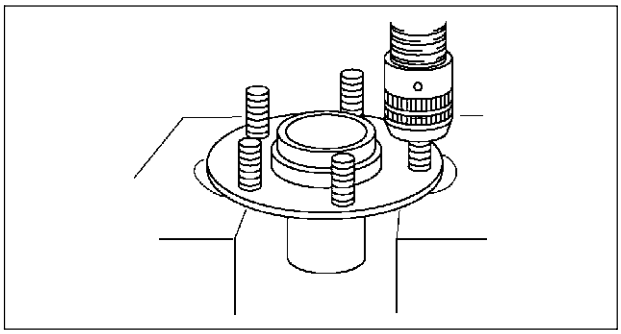

A6E6312W003

Hub Bolt Installation Note

1. Install the new hub bolts using a press.

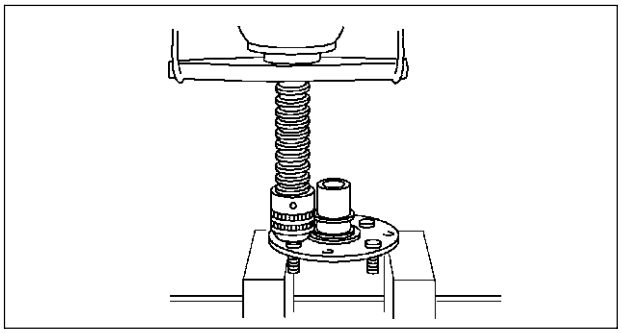

A6E6312W004

Dust Cover Installation Note

1. Mark the new dust cover in the same way as the removed one.
2. Align the marks of the new dust cover and the knuckle.

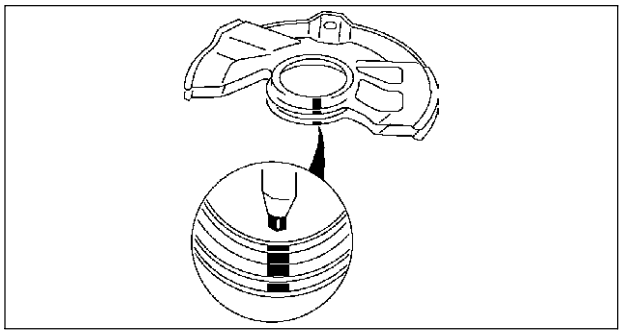

A6E0312W010

3. Install the new dust cover using the **SSTs**.

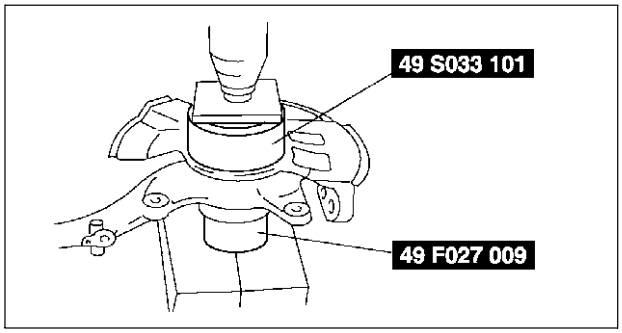

A6E0312W011

Wheel Bearing Installation Note

1. Install the new wheel bearing using the **SSTs**.

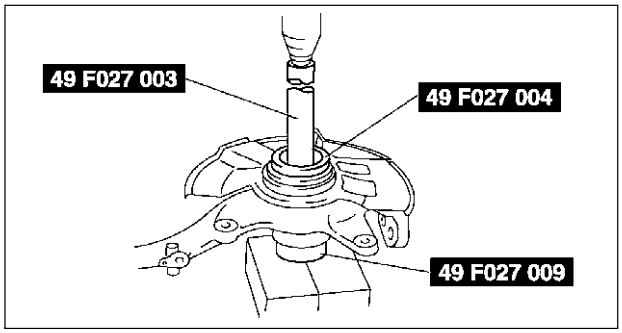

A6E0312W012

Wheel Hub Component Installation Note

1. Install the wheel hub component using the **SSTs**.

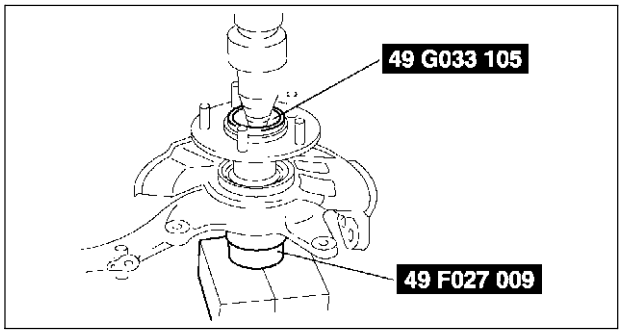

A6E0312W013

Locknut Installation Note

1. Install a new locknut and stake it as shown.

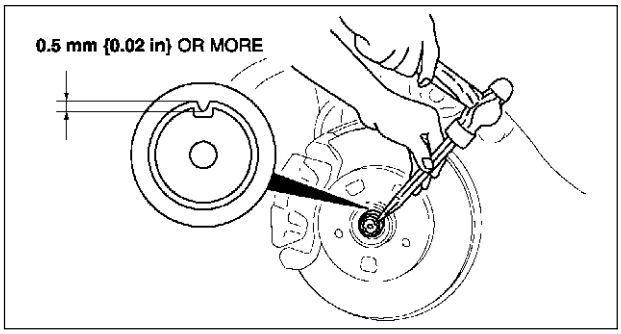

A6E0312W015

REAR AXLE

WHEEL HUB, HUB SPINDLE PRE-INSPECTION

A6E631405000W01

Wheel Bearing Play Inspection

1. Position a dial indicator against the wheel hub.
2. Push and pull the wheel hub by hand in the axial direction and measure the wheel bearing play.

   Maximum wheel bearing play
   0.05 mm {0.002 in}

3. If the bearing play exceeds the specification, replace and tighten the locknut to the specified torque and retest.
   - Replace the wheel hub component as necessary.

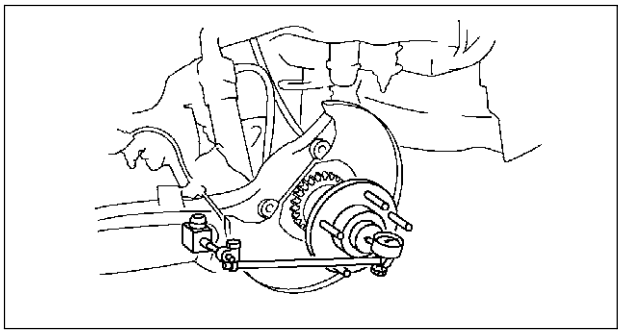

A6E0312W019

M

WHEEL HUB, HUB SPINDLE REMOVAL/INSTALLATION

A6E631405000W02

Caution

- **Performing the following procedures without first removing the ABS wheel-speed sensor may possibly cause an open circuit in the harness if it is pulled by mistake. Before performing the following procedures, remove the ABS wheel-speed sensor (body side) and fix it to an appropriate place where the sensor will not be pulled by mistake while the vehicle is being serviced.**

1. Remove in the order indicated in the table.
2. Install in the reverse order of removal.

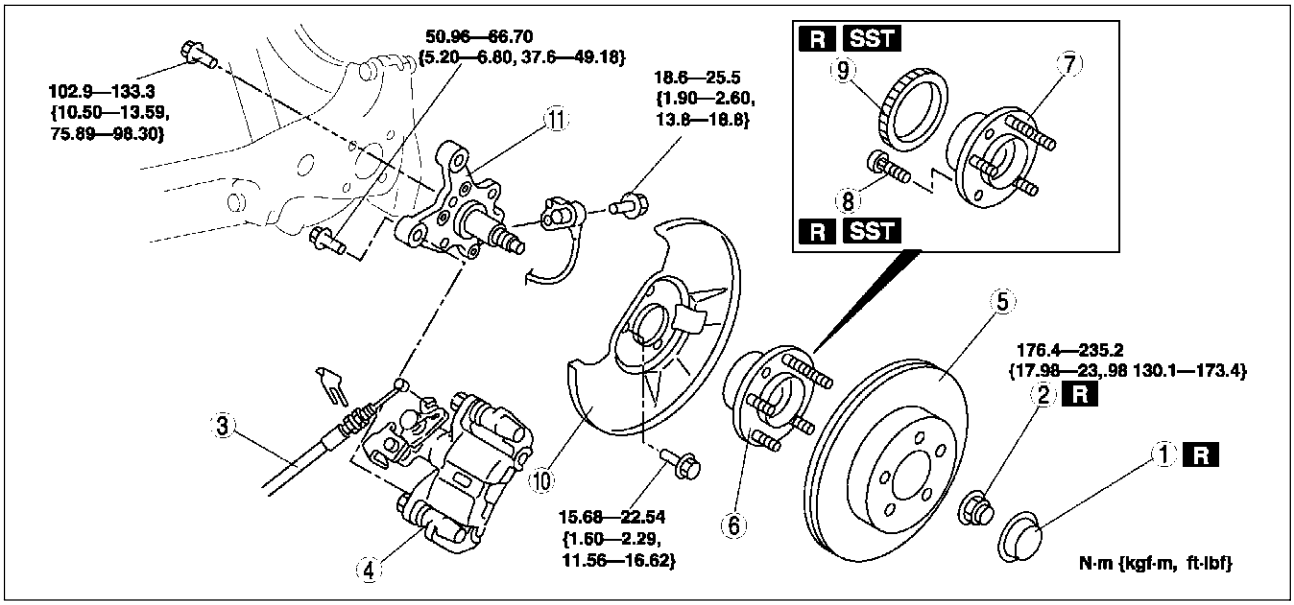

A6E0312W078

1	Hub cap
2	Locknut (See M–10 Locknut Removal Note) (See M–11 Locknut Installation Note)
3	Parking brake cable
4	Brake caliper component
5	Disc plate (See P–20 Disc Plate Removal Note)
6	Wheel hub component

7	Wheel hub
8	Hub bolt (See M–7 Hub Bolt Removal Note) (See M–7 Hub Bolt Installation Note)
9	ABS sensor rotor (with ABS) (See M–11 ABS Sensor Rotor Removal Note) (See M–11 ABS Sensor Rotor Installation Note)
10	Dust cover
11	Hub spindle

Locknut Removal Note

1. Knock the crimped portion of the locknut outward using a small cape chisel and a hammer.
2. Lock the hub by applying the brakes.
3. Remove the locknut.

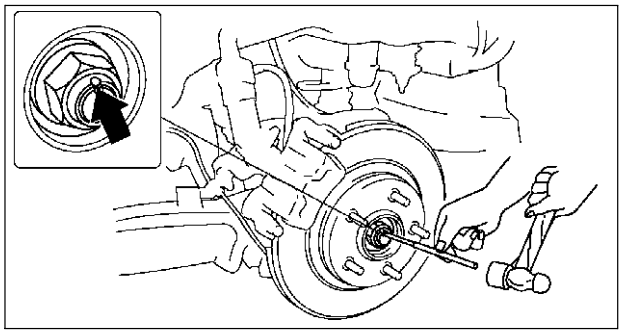

A6E0312W021

ABS Sensor Rotor Removal Note

Note
- The sensor rotor does not need to be removed unless it is being replaced.

1. Remove the sensor rotor using a chisel.

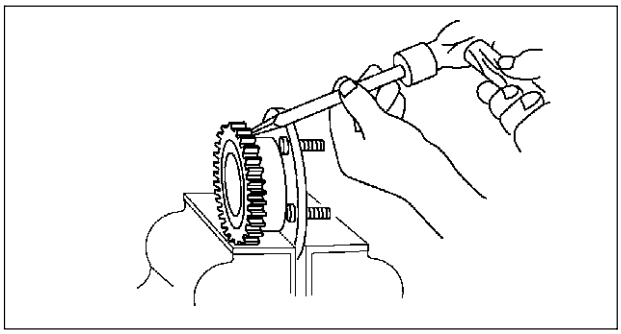

A6E6314W001

ABS Sensor Rotor Installation Note

Caution
- **Position the SST so that marking B faces the bottom.**

1. Set the **SST** as shown in the figure.

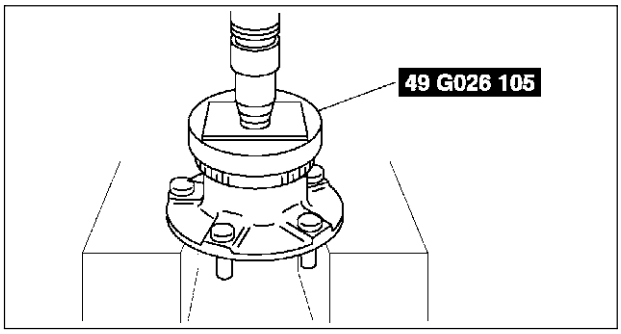

A6E0313W011

2. Press on the new sensor rotor using the **SST** and a press.

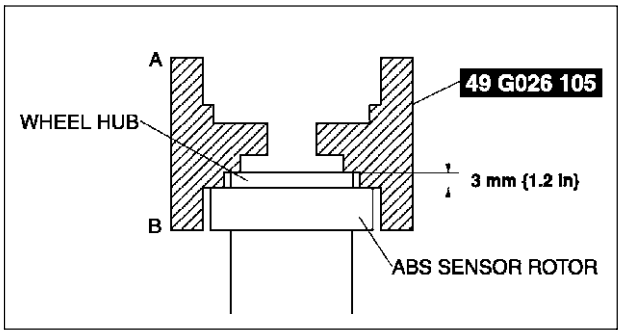

A6E0313W012

Locknut Installation Note

1. Install a new locknut and stake it as shown.

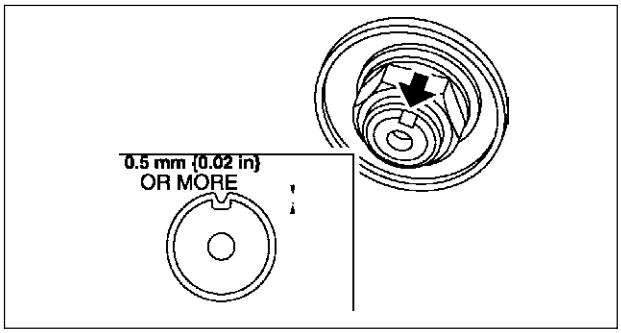

A6E0313W013

DRIVE SHAFT

JOINT SHAFT PRE-INSPECTION

A6E631625700W01

1. Verify that the joint shaft is not twisted or cracked.
   - Replace it as necessary.
2. Turn the joint shaft by hand and verify that the bearing rotates smoothly and freely.
   - Replace it as necessary.

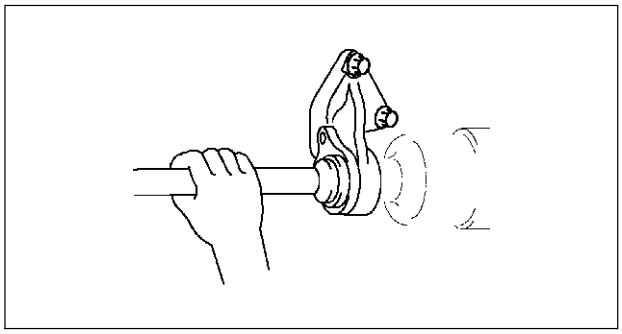

A6E0313W015

JOINT SHAFT REMOVAL/INSTALLATION

A6E631625700W02

Caution

- **Performing the following procedures without first removing the ABS wheel-speed sensor may possibly cause an open circuit in the harness if it is pulled by mistake. Before performing the following procedures, remove the ABS wheel-speed sensor and fix it to an appropriate place where the sensor will not be pulled by mistake while the vehicle is being serviced.**

1. Drain the transaxle oil. (See K–13 AUTOMATIC TRANSAXLE FLUID (ATF) REPLACEMENT.) (See J–3 TRANSAXLE OIL REPLACEMENT.)
2. Remove the ABS sensor. (SeeP–32 FRONT ABS WHEEL-SPEED SENSOR REMOVAL/INSTALLATION.)
3. Remove in the order indicated in the table.
4. Install in the reverse order of removal.

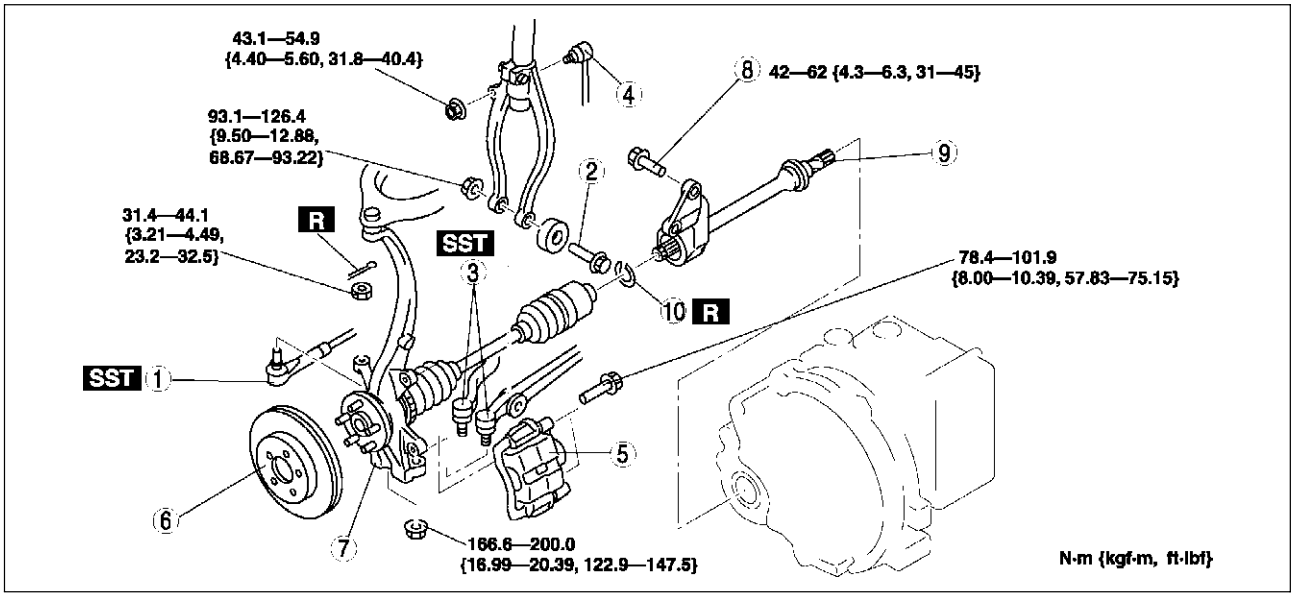

A6E0313W016

1	Tie-rod end ball joint (See N–11 Tie-rod End Ball Joint Removal Note)
2	bolt
3	Lower arm (front, rear) ball joint (See R–15 FRONT LOWER ARM (FRONT) REMOVAL/INSTALLATION) (See R–19 FRONT LOWER ARM (REAR) REMOVAL/INSTALLATION)
4	Stabilizer control link
5	Brake caliper component (See M–13 Brake Caliper Component Removal Note)
6	Disk plate (See P–20 Disc Plate Removal Note)
7	Wheel hub, steering knuckle and drive shaft (See M–13 Wheel Hub, Steering Knuckle and Drive Shaft Removal Note)
8	Joint shaft bracket bolt
9	Joint shaft
10	Clip (See M–14 Clip Installation Note)

Brake Caliper Component Removal Note

1. Suspend the caliper aside with wire.

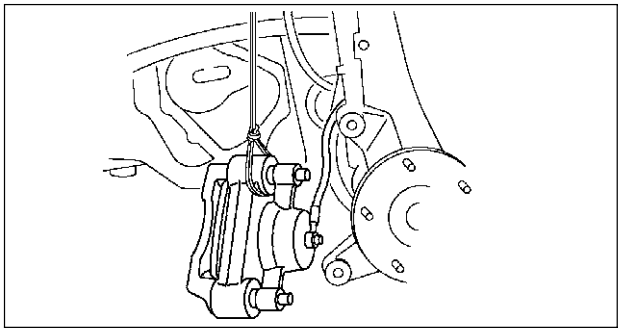

A6E0313W056

Wheel Hub, Steering Knuckle and Drive Shaft Removal Note

Caution

- **The sharp edges of the joint shaft can slice or puncture the oil seal. Be careful when removing the joint shaft from the transaxle.**

1. Pull the joint shaft straight out.
2. Install the **SST** into the transaxle to hold the side gears after the joint shaft is removed.

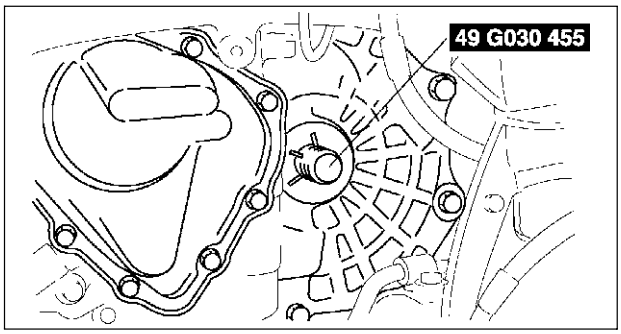

A6E0313W019

Clip Installation Note

1. Install a new clip onto the joint shaft with the opening facing upward. Ensure that the diameter of the clip does not exceed the specification on installation.
2. After installation, measure the outer diameter. If it exceeds the specification, repeat Step 1 using a new clip.

   Outer diameter specification
   31.2 mm {1.23 in} max.

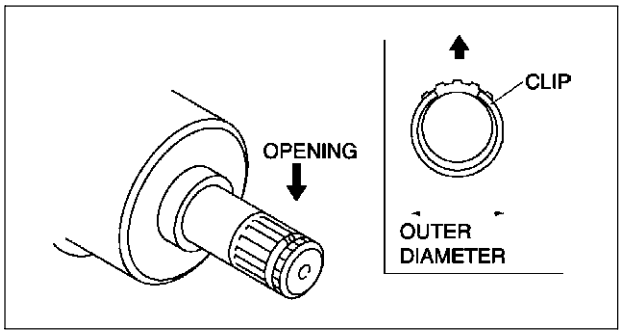

A6E0313W021

JOINT SHAFT DISASSEMBLY/ASSEMBLY

A6E631625700W03

1. Disassemble in the order indicated in the table.
2. Assemble in the reverse order of disassembly.

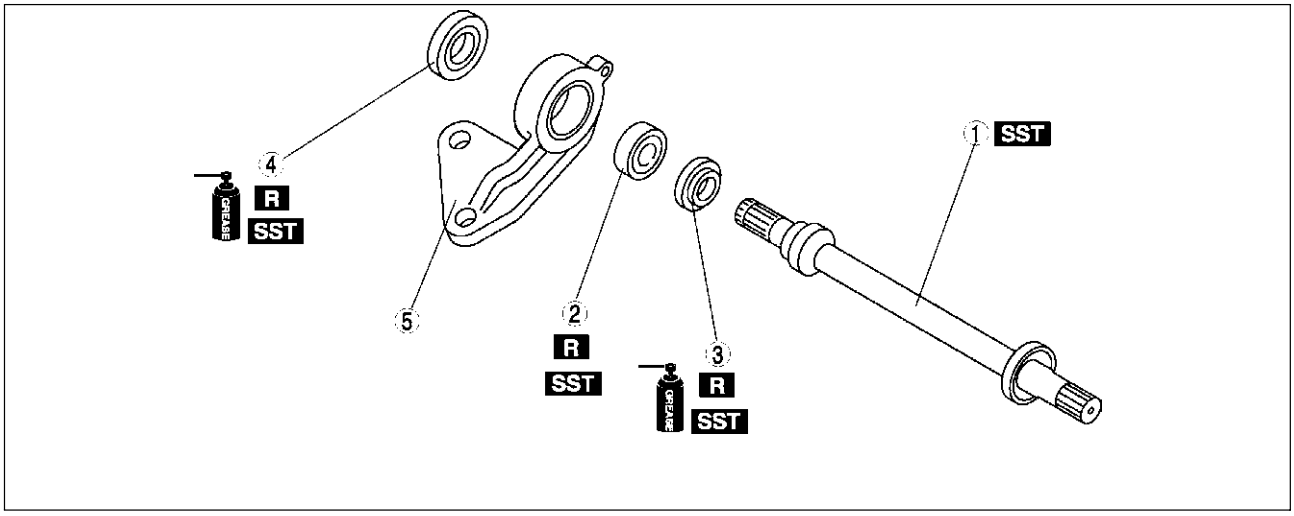

A6E0313W026

1	Joint shaft (See M–14 Joint Shaft Disassembly Note) (See M–16 Joint Shaft Assembly Note)
2	Bearing (See M–15 Bearing Disassembly Note) (See M–15 Bearing Assembly Note)
3	Dust seal (Left) (See M–16 Dust Seal (Left) Assembly Note)
4	Dust seal (Right) (See M–15 Dust Seal (Right) Assembly Note)
5	Bracket

Joint Shaft Disassembly Note

1. Disassemble the joint shaft.

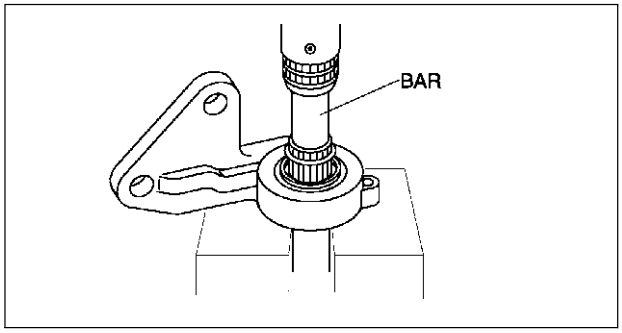

A6E0313W052

Bearing Disassembly Note

1. Remove the bearing using the **SSTs**.

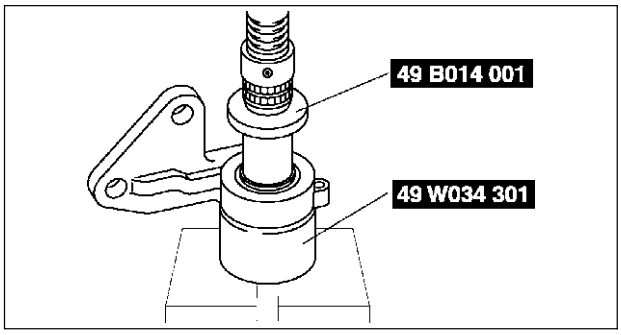

A6E0313W053

Dust Seal (Right) Assembly Note

1. Apply grease to the new dust seal lip.
2. Install the new right side dust seal using the **SSTs**.

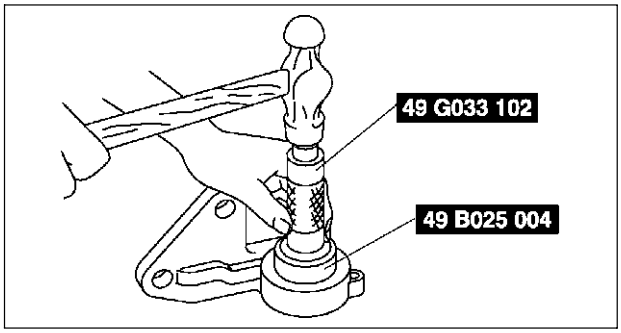

A6E0313W028

Bearing Assembly Note

1. Install the new bearing using the **SSTs**.

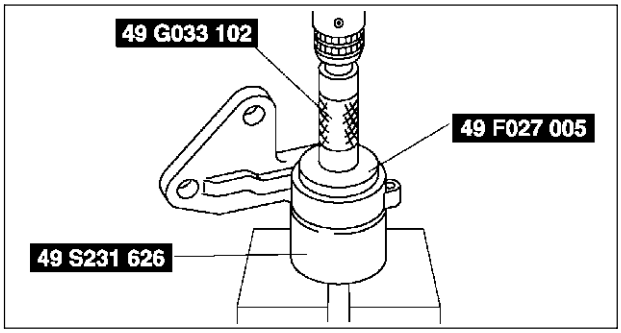

A6E0313W027

M

Dust Seal (Left) Assembly Note

1. Apply grease to the new dust seal lip.
2. Install the new left side dust seal using a steel plate and the **SSTs**.

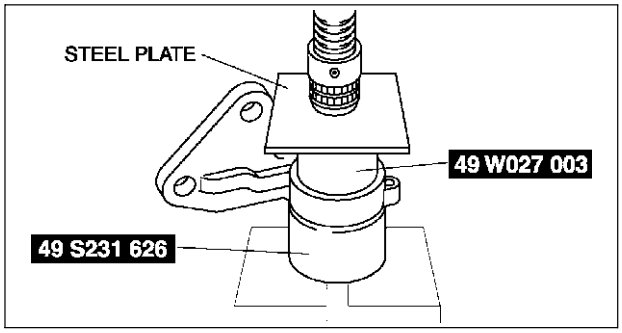

A6E0313W030

Joint Shaft Assembly Note

1. Assemble the joint shaft using a press and the **SST**.

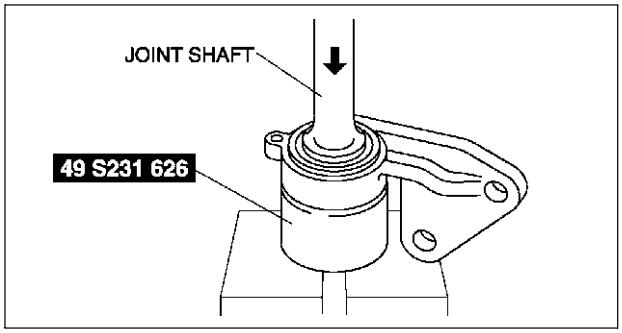

A6E0313W029

DRIVE SHAFT PRE-INSPECTION

1. Inspect the dust boot on the drive shaft for cracks, damage, leaking grease, and looseness in the boot band.
2. Inspect the drive shaft for bends, cracks, and wear in the joint or splines.
   - Repair or replace the drive shaft or boot/band as necessary.

A6E631625500W01

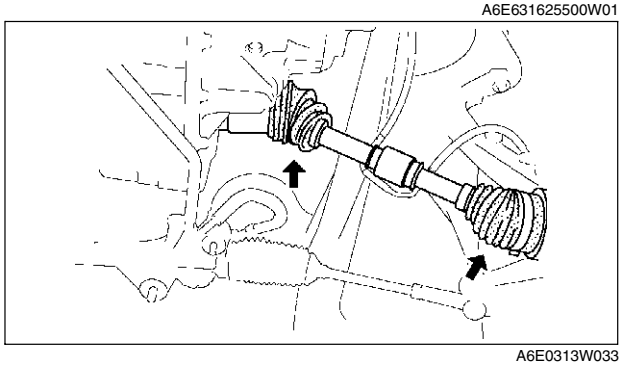

A6E0313W033

DRIVE SHAFT REMOVAL/INSTALLATION

A6E631625500W02

Caution

- **Performing the following procedures without first removing the ABS wheel-speed sensor may possibly cause an open circuit in the harness if it is pulled by mistake. Before performing the following procedures, remove the ABS wheel-speed sensor (axle side) and fix it to an appropriate place where the sensor will not be pulled by mistake while the vehicle is being serviced.**

1. Drain the transaxle oil (left side). (See K–13 AUTOMATIC TRANSAXLE FLUID (ATF) REPLACEMENT.) (SeeJ–3 TRANSAXLE OIL REPLACEMENT.)
2. Remove in the order indicated in the table.
3. Install in the reverse order of removal.

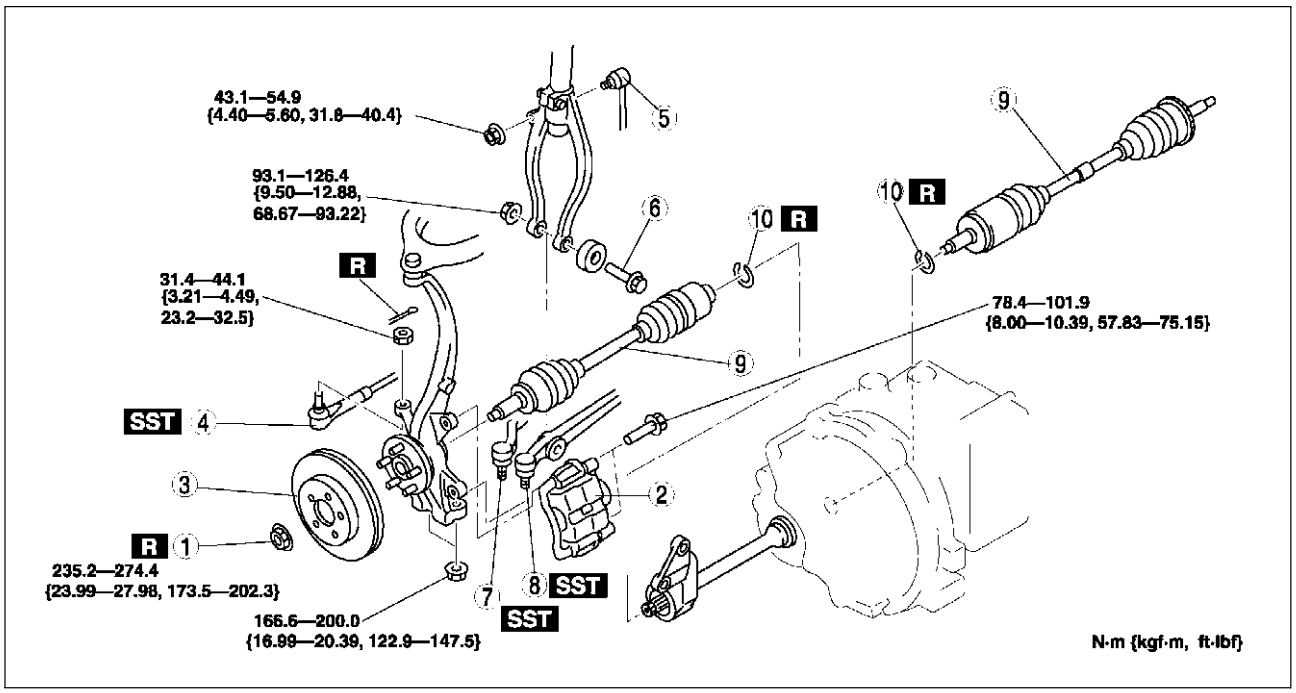

A6E0313W055

1	Locknut (See M–6 Locknut Removal Note) (See M–9 Locknut Installation Note)
2	Brake caliper component (See M–13 Brake Caliper Component Removal Note)
3	Disc plate (See P–20 Disc Plate Removal Note)
4	Tie-rod end ball joint (See N–11 Tie-rod End Ball Joint Removal Note)
5	Front stabilizer control link (See R–22 FRONT STABILIZER REMOVAL/ INSTALLATION)

6	Bolt
7	Front lower arm (rear) ball joint (See R–19 Front Lower Arm (Rear) Ball Joint Removal Note)
8	Front lower arm (front) ball joint (See R–16 Front Lower Arm (Front) Ball Joint Removal Note)
9	Drive shaft (See M–18 Drive Shaft Removal Note) (See M–19 Drive Shaft Installation Note)
10	Clip (See M–18 Clip Installation Note)

Drive Shaft Removal Note

1. Install a spare nut onto the drive shaft so that the nut is flush with the end of the drive shaft.
2. Tap the nut with a copper hammer to loosen the drive shaft from the front wheel hub.
3. Separate the drive shaft from the wheel hub.

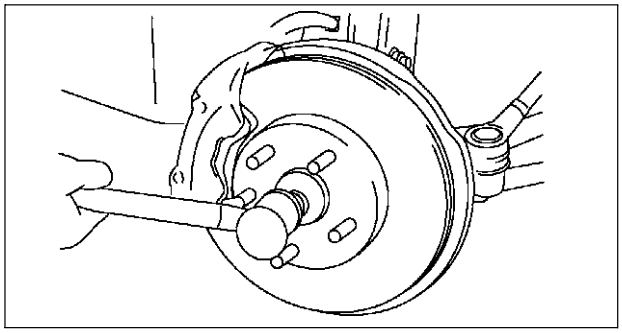

A6E6316W001

Caution

- **The sharp edges of the drive shaft can slice or puncture the oil seal. Be careful when removing the drive shaft from the transaxle.**

4. Separate the left side drive shaft from the transaxle by prying with a bar inserted between the outer ring and the transaxle, as shown in the figure.

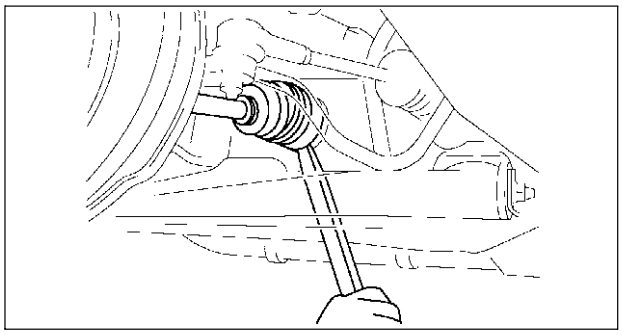

A6E6316W002

5. Install the **SST** into the transaxle to hold the side gears after the drive shaft is removed.

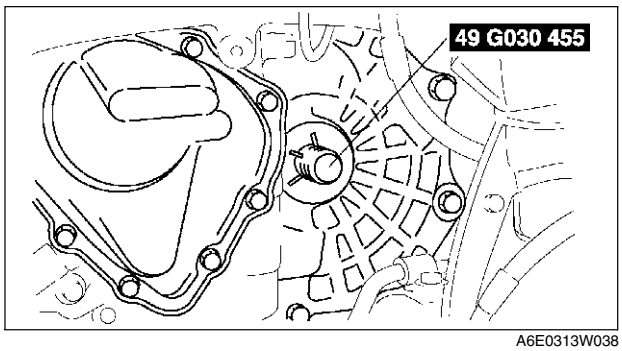

A6E0313W038

Clip Installation Note

1. Install a new clip onto the joint shaft with the opening facing upward. Ensure that the diameter of the clip does not exceed the specification on installation.
2. After installation, measure the outer diameter. If it exceeds the specification, repeat Steps 1—2 using a new clip.

Outer diameter specification
31.2 mm {1.23 in} max.

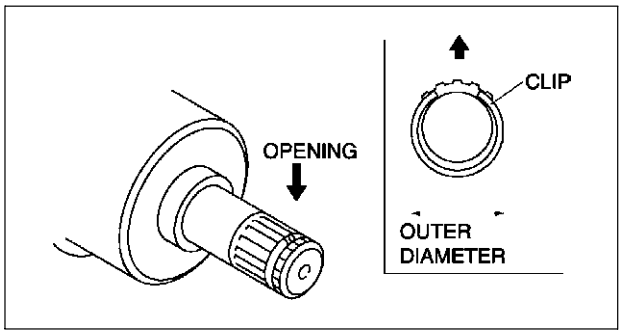

A6E0313W021

Drive Shaft Installation Note

Caution

- **The sharp edges of the drive shaft can slice or puncture the oil seal. Be careful when installing the drive shaft to the transaxle.**
- **The oil seals are damaged easily if this procedure is not done correctly.**

1. Insert the drive shaft into the wheel hub.
2. Apply transaxle oil to the oil seal lip.
3. Push the drive shaft into the transaxle.
4. After installation, pull the transaxle side outer ring forward to confirm that the drive shaft is securely held by the clip.

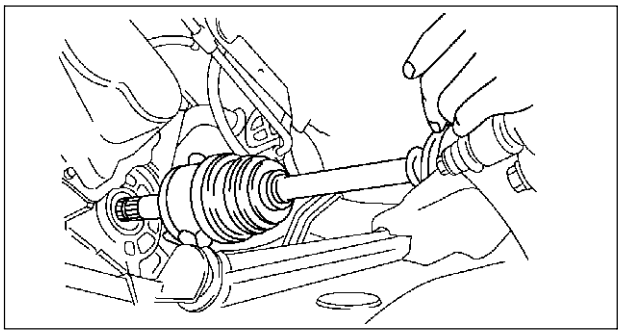

A6E6316W003

DRIVE SHAFT (ATX) DISASSEMBLY/ASSEMBLY

A6E631625500W03

1. Disassemble in the order indicated in the table.
2. Assemble in the reverse order of disassembly.

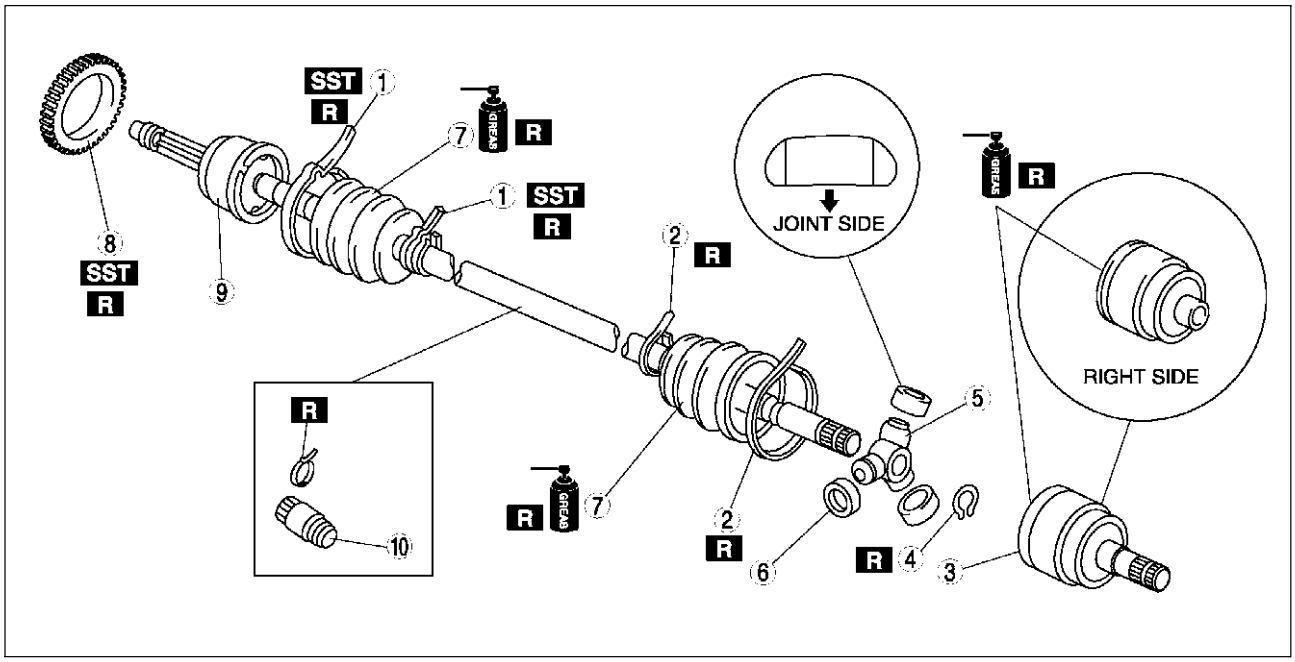

A6E0313W043

1	Boot band (wheel side) (See M–20 Boot Band (Wheel Side) Disassembly Note) (See M–23 Boot Band (Wheel Side) Assembly Note)
2	Boot band (transaxle side) (See M–20 Boot Band (Transaxle Side) Disassembly Note) (See M–23 Boot Band (Transaxle Side) Assembly Note)
3	Outer ring (See M–20 Outer Ring Disassembly Note) (See M–22 Outer Ring Assembly Note)
4	Snap ring (See M–20 Snap Ring, Tripod Joint Disassembly Note) (See M–22 Tripod Joint, Snap Ring Assembly Note)

5	Tripod joint (See M–20 Snap Ring, Tripod Joint Disassembly Note) (See M–22 Tripod Joint, Snap Ring Assembly Note)
6	Free ring
7	Boot (See M–21 Boot Disassembly Note) (See M–22 Boot Assembly Note)
8	ABS sensor rotor (with ABS) (See M–21 ABS Sensor Rotor (With ABS) Disassembly Note) (See M–22 ABS Sensor Rotor (With ABS) Assembly Note)
9	Shaft and ball joint component
10	Dynamic damper (See M–21 Dynamic Damper Assembly Note)

Boot Band (Wheel Side) Disassembly Note

Note
- The boot band does not need to be removed unless it is being replaced.

1. Remove the boot clamp with end clamp pliers as shown and discard the clamp.

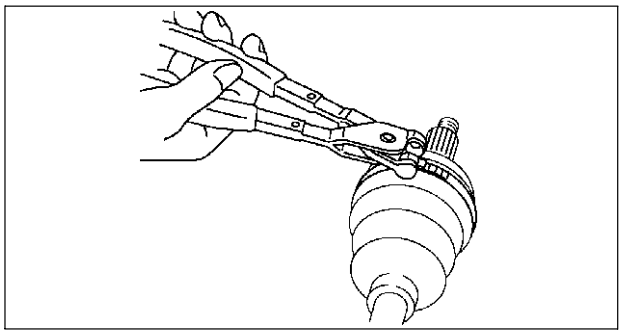

A6E6316W004

Boot Band (Transaxle Side) Disassembly Note
1. Pry up the locking clips using a screwdriver.
2. Pull back the end of the band.

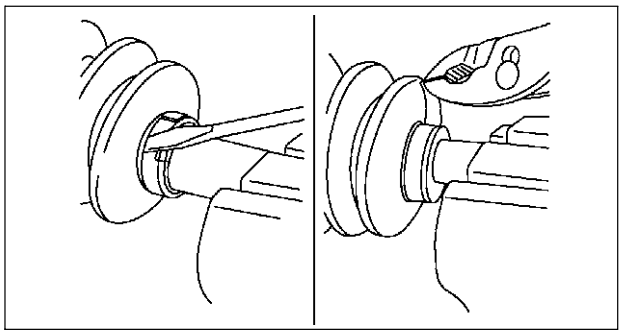

A6E6316W005

Outer Ring Disassembly Note
1. Mark the outer ring and the shaft for proper assembly.
2. Remove the outer ring.

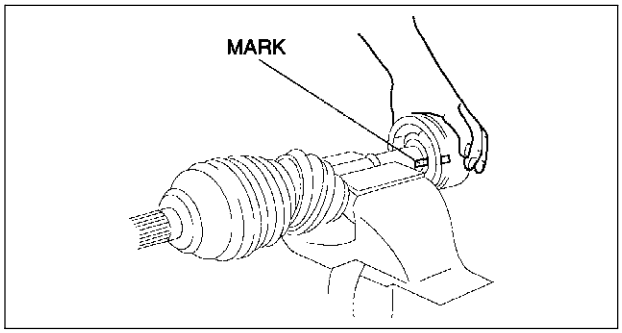

A6E0313W046

Snap Ring, Tripod Joint Disassembly Note
1. Mark the shaft and tripod joint for proper assembly.
2. Remove the snap ring using snap-ring pliers.
3. Remove the tripod joint from the shaft.

Caution
- **Do not tap the tripod joint with a hammer.**

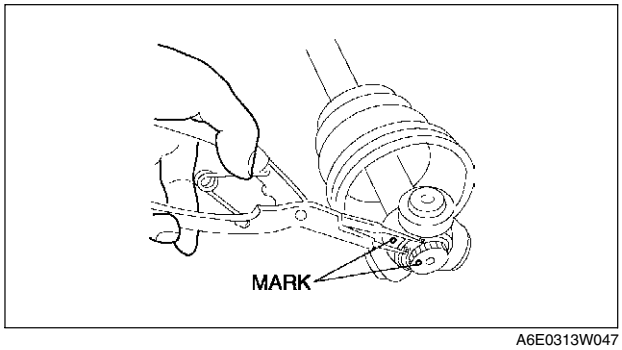

A6E0313W047

Boot Disassembly Note

Note
- The wheel side boot does not need to be removed unless replacing it or the ball joint and shaft component.
- Do not strip the tape until the boot is assembled.

1. Wrap the shaft splines with tape.
2. Remove the boot.

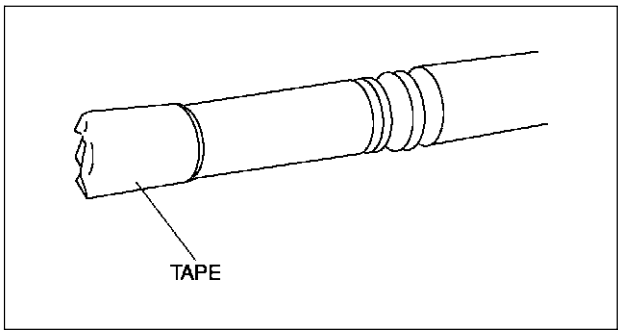

A6E0313W048

ABS Sensor Rotor (With ABS) Disassembly Note

Caution
- **Do not remove the sensor rotor unless it is necessary.**
- **Do not reuse the sensor rotor if removed.**

1. Tap the ABS sensor rotor off the drive shaft using a chisel.

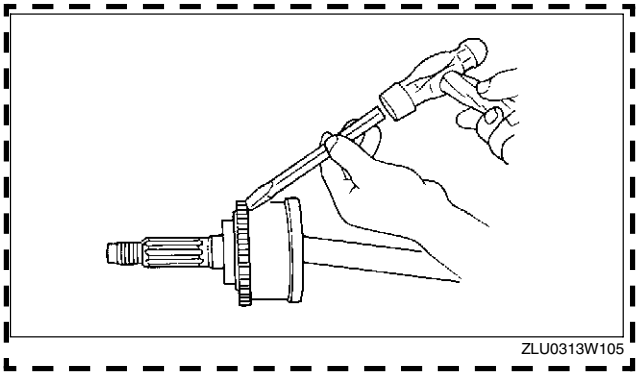
ZLU0313W105

Dynamic Damper Assembly Note

1. Install the dynamic damper as shown in the figure.

   Standard length
   334.7—340.7 mm {13.2—13.4 in}

2. Install the new boot band onto the dynamic damper.

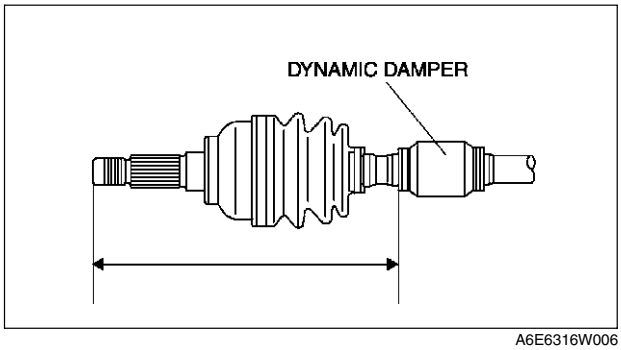

A6E6316W006

ABS Sensor Rotor (With ABS) Assembly Note

1. Set a new ABS sensor rotor on the drive shaft and press it on using the **SSTs**.

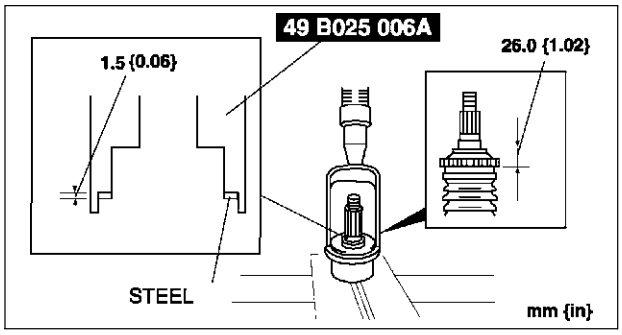

A6E0313W050

Boot Assembly Note

Note
- The wheel side and transaxle side boots are different.

1. Fill the boot (wheel side) with the specified grease.

Caution
- **Do not touch grease with your hand. Apply it from the tube to prevent foreign matter from entering the boot.**

Grease amount
90—110 g {3.18—3.88 oz}

2. With the splines of the shaft still wrapped in tape from disassembly, install the boot.
3. Remove the tape.

Tripod Joint, Snap Ring Assembly Note

1. Align the marks and install the tripod joint using a bar and a hammer.

Caution
- **Do not damage the roller.**

2. Install the new snap ring using snap-ring pliers.

Caution
- **Be sure the snap ring engages correcting in the groove of the shaft.**

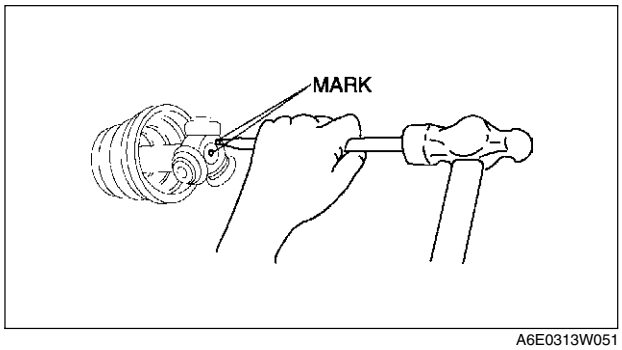

A6E0313W051

Outer Ring Assembly Note

1. Fill the outer ring and boot (transaxle side) with the specified grease.

Caution
- **Do not touch grease with your hand. Apply it from the tube to prevent foreign matter from entering the boot.**

Grease amount
195—215 g {6.88—7.58 oz}

2. Install the outer ring.
3. Set the drive shaft to the standard length.

Standard length

mm {in}

Left side	Right side
674.5—684.5 {26.56—26.94}	631.2—641.2 {24.86—25.24}

4. Release any trapped air from the boots by carefully lifting up the small end of each boot with a cloth wrapped screwdriver.

   Caution
   - **Do not let grease leak.**
   - **Do not damage the boot.**

5. Verify that the drive shaft length is within the standard.

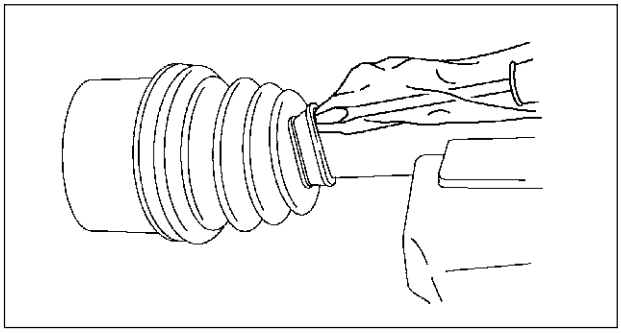

A6E6316W007

Boot Band (Transaxle Side) Assembly Note

1. Fold the band in the direction opposite to the forward revolving direction of the drive shaft and use pliers to pull it tight.
2. Lock the end of the band by bending the locking clips.

   Caution
   - **Install the band into the groove securely.**

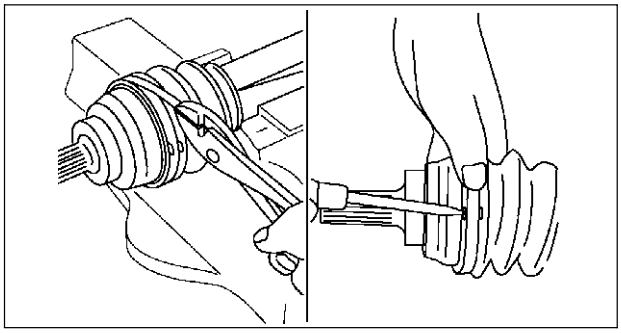

A6E6316W008

Boot Band (Wheel Side) Assembly Note

1. Adjust clearance A by turning the adjusting bolt of the **SST**.

   Clearance A
   2.9 mm {0.11 in}

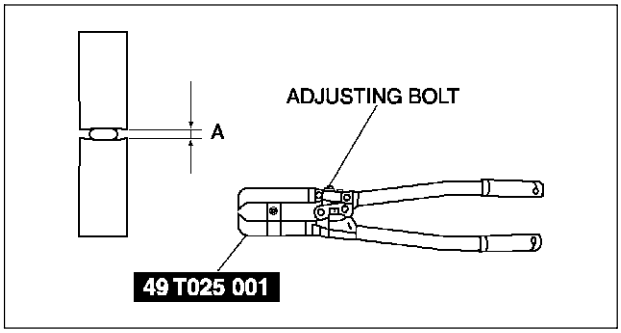

A6E0350W012

2. Crimp the wheel side small boot band using the **SST**. Verify that clearance B is within the specification.
   - If clearance B is more than the specification, reduce clearance A of the **SST** and crimp the boot again.
   - If clearance B is less than the specification, replace the boot band, increase clearance A of the **SST**, and crimp the new boot.

   Clearance B
   2.4—2.8 mm {0.095—0.110 in}

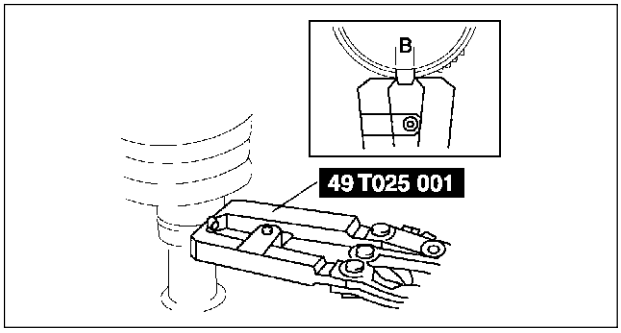

A6E0350W013

3. Verify that the boot band does not protrude from the boot band installation area.
   - If it does, replace the boot band and repeat Steps 2 and 3.
4. Fill the boot with the repair kit grease.
5. Adjust clearance A by turning the adjusting bolt of the **SST**.

   Clearance A
   3.2 mm {0.13 in}

6. Crimp the wheel side big boot band using the **SST**.
7. Verify that clearance B is within the specification.
   - If clearance B is more than the specification, reduce clearance A of the **SST** and crimp the boot again.
   - If clearance B is less than the specification, replace the boot band, increase clearance A of the **SST** and crimp the new boot.

Clearance B
2.4—2.8 mm {0.095—0.110 in}

8. Verify that the boot band does not protrude from the boot band installation area.
   - If it does, replace the boot band and repeat Steps 7 and 8.

DRIVE SHAFT (MTX) DISASSEMBLY/ASSEMBLY

A6E631625500W04

1. Disassemble in the order indicated in the table.
2. Assemble in the reverse order of disassembly.

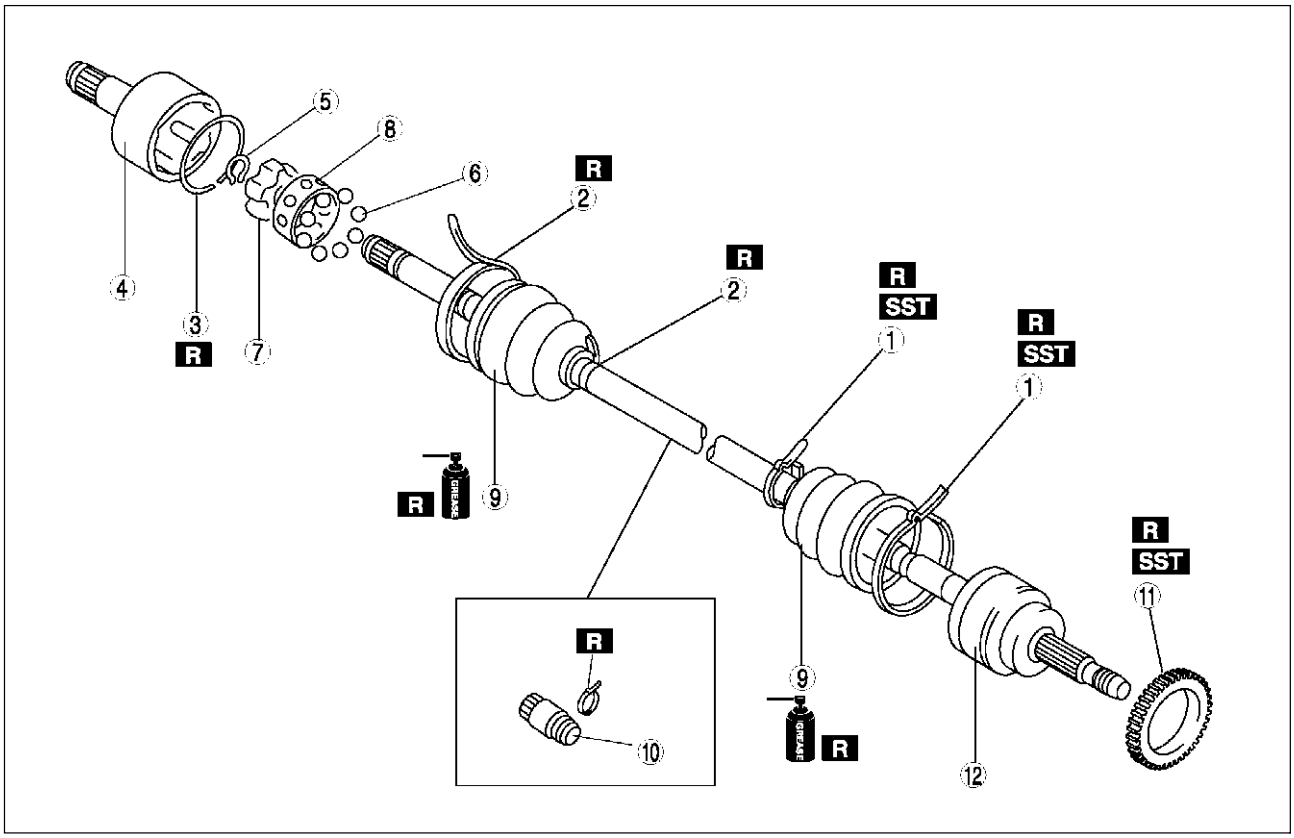

A6E6316W009

1	Boot band (wheel side) (See M–20 Boot Band (Wheel Side) Disassembly Note) (See M–23 Boot Band (Wheel Side) Assembly Note)
2	Boot band (transaxle side) See M–20 Boot Band (Transaxle Side) Disassembly Note See M–23 Boot Band (Transaxle Side) Assembly Note
3	Clip See M–25 Clip Disassembly Note See M–26 Outer Ring, Clip Assembly Note
4	Outer ring (See M–26 Outer Ring, Clip Assembly Note)
5	Snap ring (See M–26 Cage, Inner Ring, Balls, Snap Ring Assembly Note)
6	Balls (See M–25 Balls, Inner Ring, Cage Disassembly Note) (See M–26 Cage, Inner Ring, Balls, Snap Ring Assembly Note)
7	Inner Ring (See M–25 Balls, Inner Ring, Cage Disassembly Note) (See M–26 Cage, Inner Ring, Balls, Snap Ring Assembly Note)
8	Cage (See M–25 Balls, Inner Ring, Cage Disassembly Note) (See M–26 Cage, Inner Ring, Balls, Snap Ring Assembly Note)
9	Boot (See M–26 Boot Assembly Note)
10	Dynamic damper (See M–26 Dynamic Damper Assembly Note)
11	ABS sensor rotor (See M–21 ABS Sensor Rotor (With ABS) Disassembly Note) (See M–22 ABS Sensor Rotor (With ABS) Assembly Note)
12	Shaft and ball joint component

M

Clip Disassembly Note

1. Mark the drive shaft and outer ring for proper assembly.

   Caution
   - **Mark with paint; do not use a punch.**

2. Remove the clip.

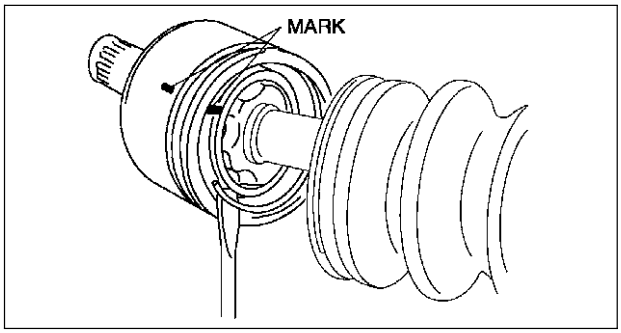

A6E6316W010

Balls, Inner Ring, Cage Disassembly Note

1. Mark the inner ring and cage.

   Caution
   - **Mark with paint; do not use a punch.**

2. Remove the snap ring using snap-ring pliers.
3. Turn the cage **approximately 30 degree** and pull the cage and balls away from the inner ring.

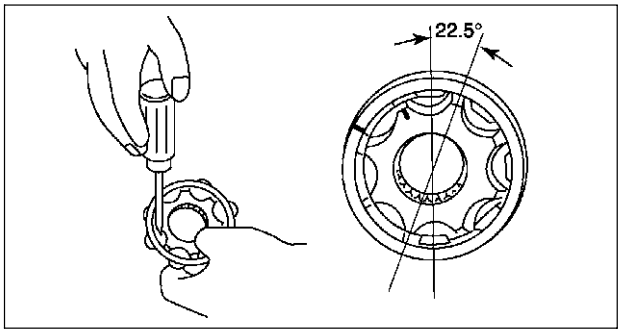

A6E6316W015

Dynamic Damper Assembly Note

1. Install the dynamic damper as shown in the figure.

   Standard length
   334.7—340.7 mm {13.2—13.4 in}

2. Install the new boot band onto the dynamic damper.

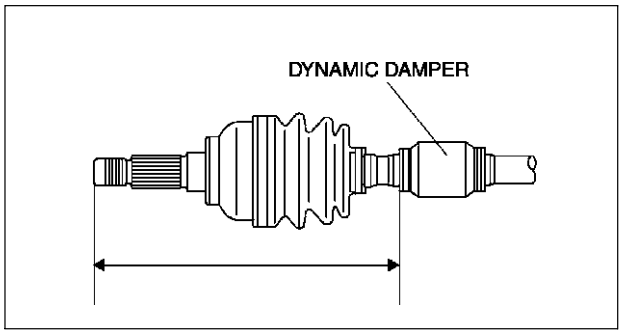

A6E6316W006

Boot Assembly Note

Note
- The wheel side and transaxle side boots are different.

1. Fill the boot (wheel side) with the specified grease.

   Caution
   - **Do not touch grease with your hand. Apply it from the tube to prevent foreign matter from entering the boot.**

   Grease amount
   90—110 g {3.18—3.88 oz} (L8, LF left side)
   105—125 g {3.71—4.40 oz} (L8, LF right side and L3)

2. With the splines of the shaft still wrapped in tape from disassembly, install the boot.
3. Remove the tape.

Cage, Inner Ring, Balls, Snap Ring Assembly Note

1. Align the marks and install the balls and cage to the inner ring in the direction shown in the figure.

   Caution
   - **Install the cage with the offset facing the snap ring groove. If incorrectly installed, the drive shaft may become disengaged.**

2. Install a new snap ring.

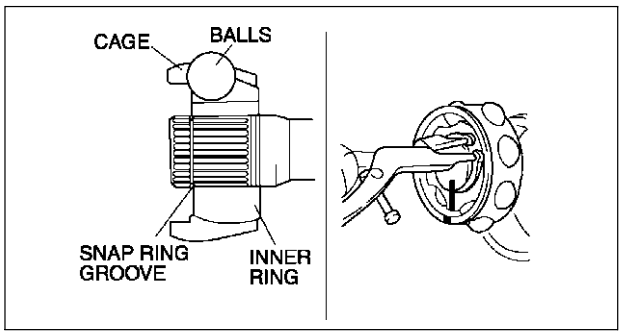

A6E6316W011

Outer Ring, Clip Assembly Note

1. Fill the outer ring and boot (transaxle side) with the specified grease.

   Caution
   - **Do not touch grease with your hand. Apply it from the tube to prevent foreign matter from entering the boot.**

   Grease amount
   105—125 g {3.71—4.40 oz} (L8, LF left side),
   120—140 g {4.24—4.93 oz} (L8, LF right side and L3)

2. Align the marks, and install the outer ring on to the shaft.
3. Install a new clip.
4. Install the boot.
5. Set the drive shaft to the standard length.

Standard length

mm {in}

	Left side	Right side
L8, LF	677.7—687.7 {26.69—27.07}	628.6—638.6 {24.75—25.14}
L3	676.6—686.6 {26.64—27.03}	

6. Release any trapped air from the boots by carefully lifting up the small end of each boot with a cloth wrapped screwdriver.

   Caution
   - **Be careful not to allow the grease to leak.**
   - **Do not damage the boot.**

7. Verify that the drive shaft length is within the specification.

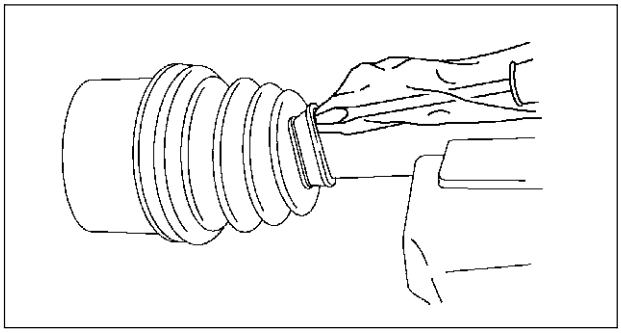

A6E6316W007

M

STEERING SYSTEM

LOCATION INDEX N-2
STEERING LOCATION INDEX N-2
GENERAL PROCEDURES N-3
PRECAUTION (STEERING) N-3
ENGINE SPEED SENSING POWER STEERING N-3
AIR BLEEDING N-3
POWER STEERING FLUID INSPECTION N-4
STEERING WHEEL AND COLUMN INSPECTION N-6
STEERING WHEEL AND COLUMN REMOVAL/INSTALLATION N-7
STEERING SHAFT INSPECTION N-9
STEERING GEAR AND LINKAGE REMOVAL/INSTALLATION N-10
STEERING GEAR AND LINKAGE DISASSEMBLY N-12
STEERING GEAR AND LINKAGE INSPECTION N-16
STEERING GEAR AND LINKAGE ASSEMBLY N-16
POWER STEERING OIL PUMP REMOVAL/INSTALLATION N-22
POWER STEERING OIL PUMP DISASSEMBLY/ASSEMBLY N-22

LOCATION INDEX

STEERING LOCATION INDEX

A6E660001036W01

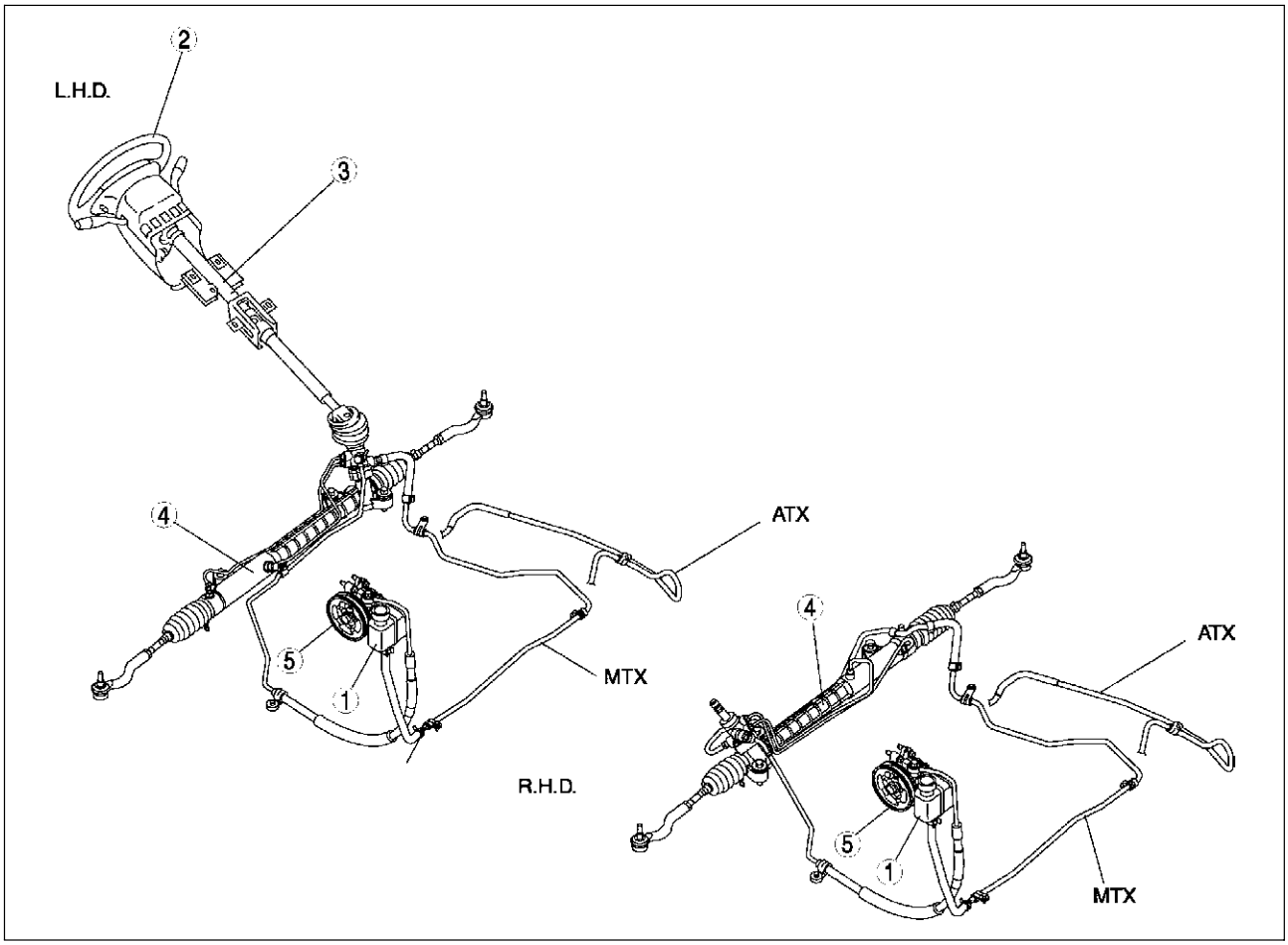

A6E0610W010

1	Power steering fluid (See N–4 POWER STEERING FLUID INSPECTION)
2	Steering wheel and column (See N–6 STEERING WHEEL AND COLUMN INSPECTION) (See N–7 STEERING WHEEL AND COLUMN REMOVAL/INSTALLATION)
3	Steering shaft (See N–9 STEERING SHAFT INSPECTION)

4	Steering gear and linkage (See N–10 STEERING GEAR AND LINKAGE REMOVAL/INSTALLATION) (See N–12 STEERING GEAR AND LINKAGE DISASSEMBLY) (See N–16 STEERING GEAR AND LINKAGE INSPECTION) (See N–16 STEERING GEAR AND LINKAGE ASSEMBLY)
5	Power steering oil pump (See N–22 POWER STEERING OIL PUMP REMOVAL/INSTALLATION) (See N–22 POWER STEERING OIL PUMP DISASSEMBLY/ASSEMBLY)

GENERAL PROCEDURES

PRECAUTION (STEERING)

A6E661001036W01

Wheels and Tires Removal/Installation

1. The removal and installation procedures for the wheels and tires are not mentioned in this section. When a wheel is removed, tighten it to
   88—118 N·m {9.0—12.0 kgf·m, 65.0—87.0 ft·lbf}.

Power Steering Components Removal/Installation

1. If any power steering fluid line has been disconnected anytime during the procedure, add ATF M-III or equivalent (e.g. Dexron®II), bleed the fluid lines, and inspect for leakage after the procedure has been completed.

Connectors Disconnection/Connection

1. Disconnect the negative battery cable before doing any work that requires handling of connectors. Reconnect the negative battery cable only after the work is completed.

Suspension Arm Removal/Installation

1. Tighten any part of the suspension that uses rubber bushings only after vehicle has been lowered and unloaded.

   Note
   - Unloaded: Fuel tank is full. Engine coolant and engine oil are at specified level. Spare tire, jack, and tools are in designated position.

N

ENGINE SPEED SENSING POWER STEERING

AIR BLEEDING

A6E661401036W01

1. Inspect the fluid level. (See N–4 POWER STEERING FLUID INSPECTION.)
2. Jack up the front of the vehicle and support it on safety stands.
3. Turn the steering wheel fully to the left and right several times with the engine not running.
4. Reinspect the fluid level.
   - If it has dropped, add fluid.
5. Repeat Steps 3 and 4 until the fluid level stabilizes.
6. Lower the vehicle.
7. Start the engine and let it idle.
8. Turn the steering wheel fully to the left and right several times.
9. Verify that the fluid is not foamy and that the fluid level has not dropped.
   - If the fluid level has dropped, add fluid as necessary and repeat Steps 8 and 9.

POWER STEERING FLUID INSPECTION

A6E661432040W01

Fluid Level Inspection

1. Inspect the power steering fluid level.
   - Add fluid to the specified level as necessary.

Fluid specification
ATF M-III or equivalent (e.g. Dexron®II)

Fluid Leakage Inspection

1. Start the engine and let it idle.
2. Turn the steering wheel fully to the left and right to apply fluid pressure.

Caution
- **If the steering wheel is kept in the fully turned position for more than 5 seconds, the fluid temperature will rise excessively and adversely affect the oil pump.**

3. Inspect for fluid leakage.
   - If fluid leakage is found, replace related pipe or hose.

Note
- The points where fluid leakage may occur are indicated in the figure.

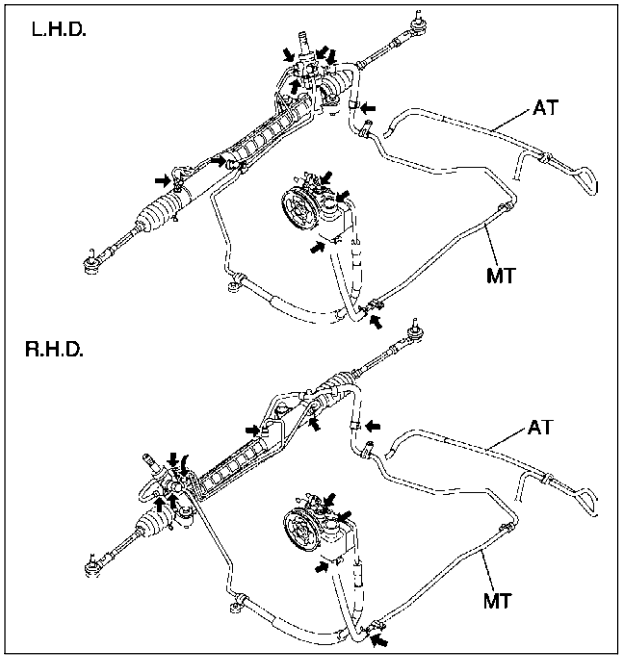

A6E0612W094

Fluid Pressure Inspection

1. Assemble the **SSTs** as shown in the figure.

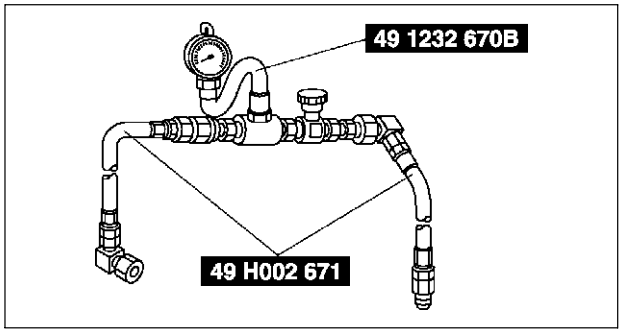

A6E0612W101

2. Disconnect the pressure pipe from the oil pump, and connect the **SSTs**.

Tightening torque
29.4—44.1 N·m {3.0—4.4 kgf·m, 22—32 ft·lbf}

3. Bleed the air from the system.
4. Open the gauge valve fully.
5. Start the engine and turn the steering wheel fully left and right to raise the fluid temperature to **50—60 °C {122—140 °F}**.

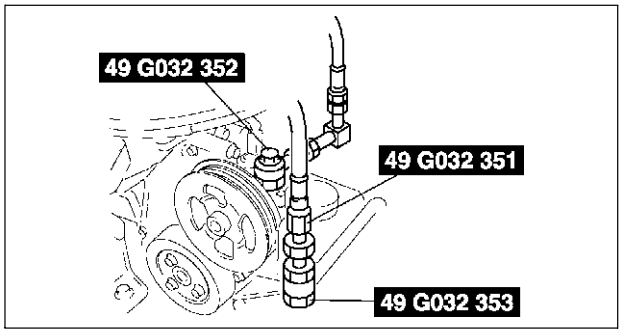

A6E0612W012

6. Close the gauge valve completely.
7. Increase the engine speed to **1,000—1,500 rpm** and measure the fluid pressure generated by the oil pump.
   - If the pressure is not within the specification, repair or replace the oil pump component.

   Caution
   - **If the valve is left closed for more than 5 seconds, the fluid temperature will rise excessively and adversely affect the oil pump.**

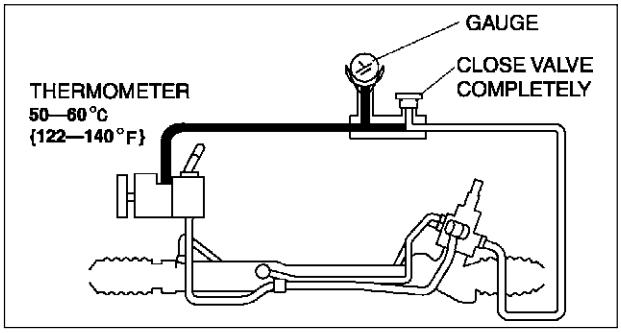

A6E0612W081

   Oil pump fluid pressure
   10.80—11.29 MPa {110.2—115.2 kgf/cm^2, 1567—1637 psi}

8. Open the gauge valve fully and increase the engine speed to **1,000—1,500 rpm**.
9. Turn the steering wheel fully to the left and right, then measure the fluid pressure generated at the gear housing.
   - If the pressure is not within the specification, repair or replace the steering gear component.

   Caution
   - **If the steering wheel is kept in the fully turned position for more than 5 seconds, the fluid temperature will rise excessively and adversely affect the oil pump.**

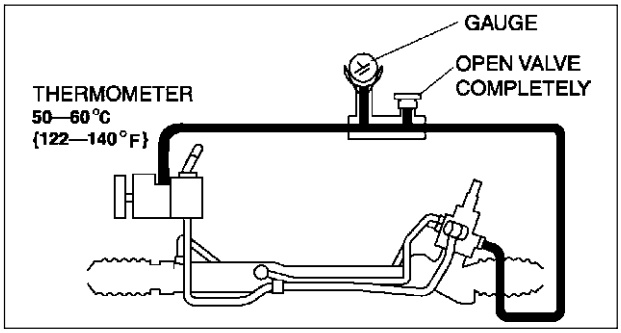

A6E0612W080

   Gear housing fluid pressure
   10.80—11.29 MPa {110.2—115.2 kgf/cm^2, 1567—1637 psi}

10. Remove the **SSTs**. Install and tighten the pressure pipe to the specified torque.

    Tightening torque
    29.4—44.1 N·m {3.0—4.4 kgf·m, 22—32 ft·lbf}

11. Bleed the air from the system.

STEERING WHEEL AND COLUMN INSPECTION

A6E661432010W01

Steering Wheel Play Inspection

1. With the wheels in the straight-ahead position, gently turn the steering wheel to the left and right and verify that the play is within the specification.
   - If the play exceeds the specification, either the steering joints are worn or the backlash of the steering gear is excessive. Correct as necessary.

Play
0—30 mm {0—1.18 in}

Steering Wheel Looseness Inspection

1. Move the steering wheel as shown in the figure to inspect for column bearing wear, steering shaft joint play, steering wheel looseness, and column looseness.
   - Repair or replace as necessary.

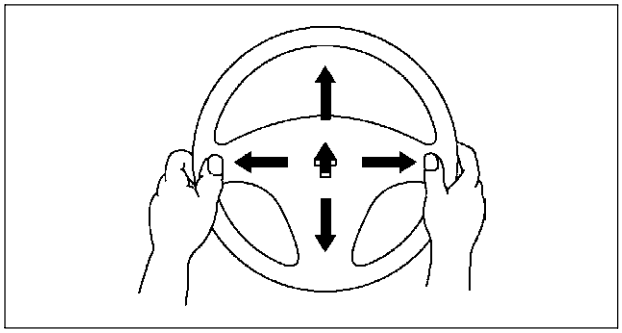

A6E0612W015

Steering Wheel Effort Inspection

1. Inspect the following points:
   - Tire size and tire pressure
   - Fluid level
   - Drive belt deflection
2. With the vehicle on a hard, level surface, put the wheels in the straight-ahead position.
3. Remove the air bag module.

Warning
- **See DRIVER-SIDE AIR BAG MODULE REMOVAL/INSTALLATION for removal/installation of the air bag module after inspection.**

4. Start the engine and warm the power steering fluid to **50—60 °C {122—140 °F}**.
5. Measure the steering wheel effort using a torque wrench.
   - If not within the specification, verify the following:
     — No air in steering system
     — No fluid leakage at hose or connectors
     — Function of oil pump and steering gear

Steering wheel effort
7.8 N·m {80 kgf·cm, 58 in·lbf} max.

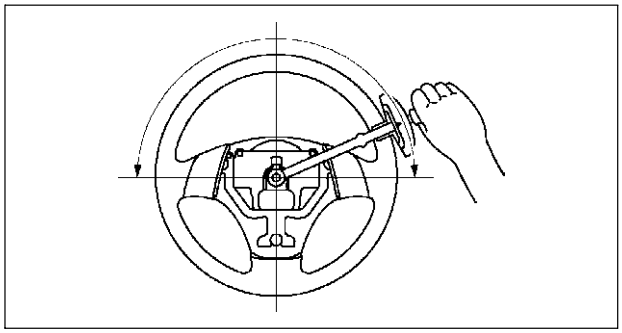

A6E0612W016

Note
- To determine whether the steering effort is satisfactory or not, perform the inspection on another vehicle of the same model and under the same conditions, and compare the results.
- The steering wheel effort varies with conditions as shown below.
  — Road conditions, such as dry or wet, and asphalt or concrete.
  — Tire conditions, such as brand, wear, and tire pressure.

STEERING WHEEL AND COLUMN REMOVAL/INSTALLATION

A6E661432010W02

Warning

- **Handling the air bag module improperly can accidentally deploy the air bag module, which may seriously injure you. Read AIR BAG SYSTEM WARNINGS before handling the air bag module. (See T–117 SERVICE WARNINGS.)**

1. Remove in the order indicated in the table.
2. Install in the reverse order of removal.

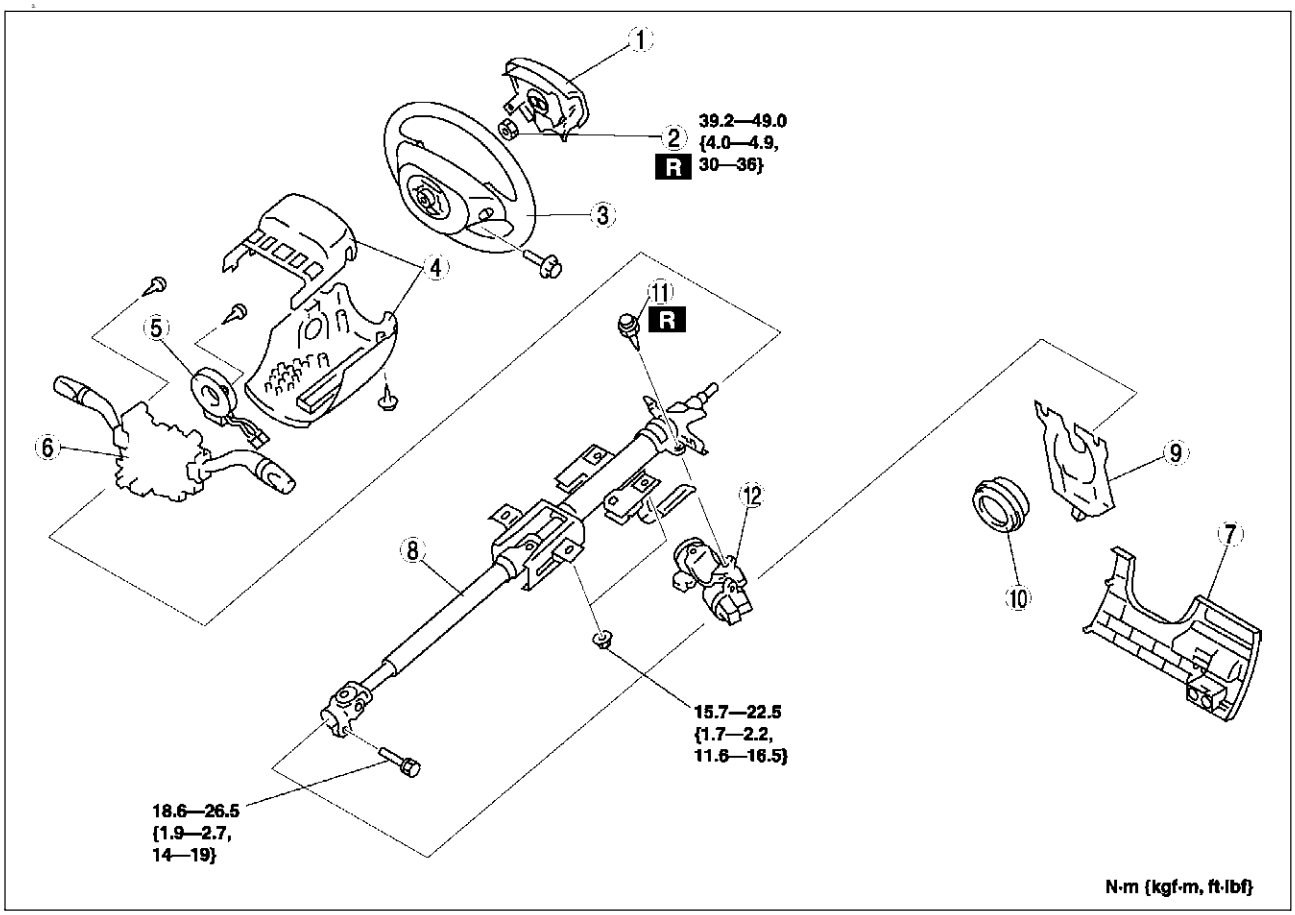

A6E0612W017

1	Air bag module (See T–120 DRIVER-SIDE AIR BAG MODULE REMOVAL/INSTALLATION)
2	Locknut
3	Steering wheel (See N–8 Steering Wheel Removal Note) (See N–8 Steering Wheel Installation Note)
4	Column cover
5	Clock spring (See T–125 CLOCK SPRING REMOVAL/INSTALLATION)
6	Combination switch

7	Lower panel
8	Steering shaft (See N–8 Steering Shaft Installation Note)
9	Joint cover
10	Dust cover
11	Steering lock mounting bolts (See N–8 Steering Lock Mounting Bolts Removal Note) (See N–8 Steering Lock Mounting Bolts Installation Note)
12	Steering lock component

N

Steering Wheel Removal Note

Caution
- **Do not try to remove the steering wheel by hitting the shaft with a hammer. The column will collapse.**

1. Set the vehicle in the straight-ahead position.
2. Remove the steering wheel using a suitable puller.

Steering Lock Mounting Bolts Removal Note
1. Make a groove in the heads of the steering lock mounting bolts using a chisel and a hammer.
2. Remove the bolts using a screwdriver.
3. Disassemble the steering lock component.

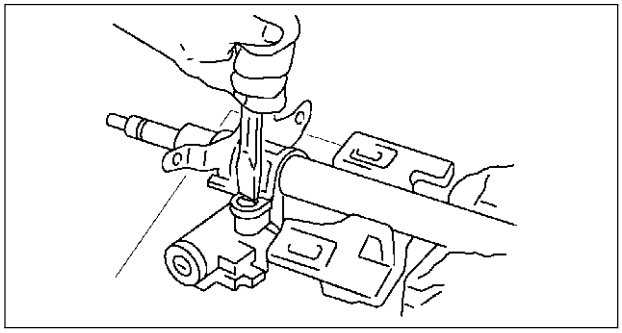

A6E0612W018

Steering Lock Mounting Bolts Installation Note
1. Assemble the steering lock component to the steering shaft.
2. Verify that the lock operates correctly.
3. Install new steering lock mounting bolts.
4. Tighten the bolts until the heads break off.

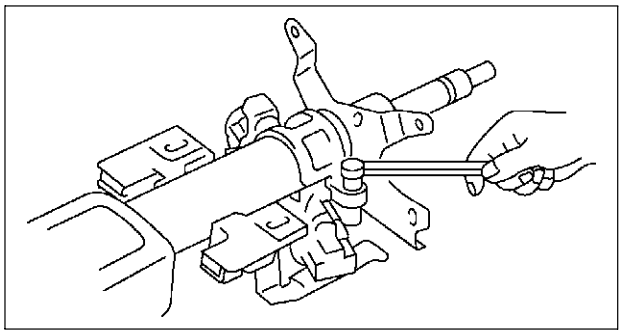

A6E0612W020

Steering Shaft Installation Note

Caution
- **Do not apply a shock in the axial direction of the shaft.**

1. Lock the tilt lever.
2. Tighten bolt A.
3. Tighten nut B.
4. Tighten nut C.

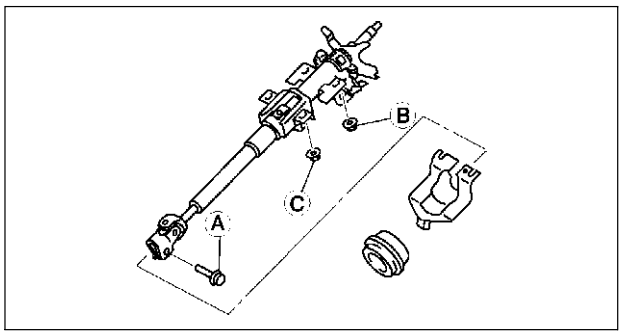

A6E0612W103

Steering Wheel Installation Note
1. Set the wheels in the straight-ahead position, and install the steering wheel.

STEERING SHAFT INSPECTION

A6E661432100W01

1. Inspect the following.
   (1) Column bearing for damage
   (2) Steering shaft length
      - Replace the steering shaft component as necessary.

   Length
   211.6 mm {8.3 in}

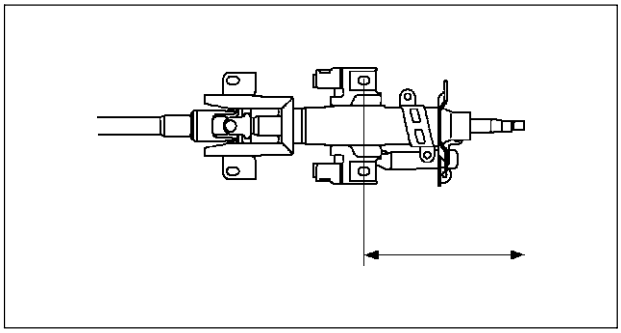

A6E0612W022

2. Inspect the tilt and telescope operation
   (1) Verify that the adjusting lever moves smoothly from unlock position to lock position.
   (2) Verify that the steering shaft is fixed firmly when the adjusting lever is locked.
      - Replace the steering shaft component as necessary.

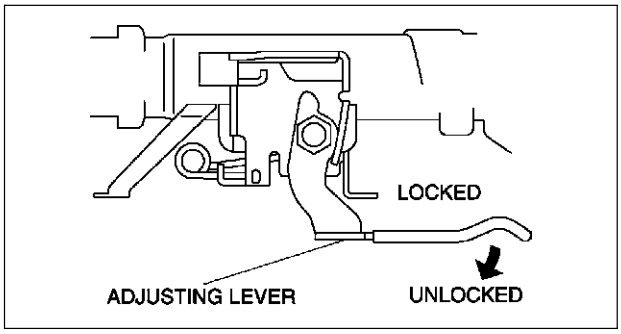

A6E0612W023

N

STEERING GEAR AND LINKAGE REMOVAL/INSTALLATION

A6E661432960W01

Caution

- **Performing the following procedures without first removing the ABS wheel-speed sensor may possibly cause an open circuit in the harness if it is pulled by mistake. Before performing the following procedures, remove the ABS wheel-speed sensor (axle side) and fix it to an appropriate place where the sensor will not be pulled by mistake while servicing the vehicle.**

1. Remove in the order indicated in the table.
2. Install in the reverse order of removal.
3. After installation, inspect the toe-in. (See R–5 FRONT WHEEL ALIGNMENT.)

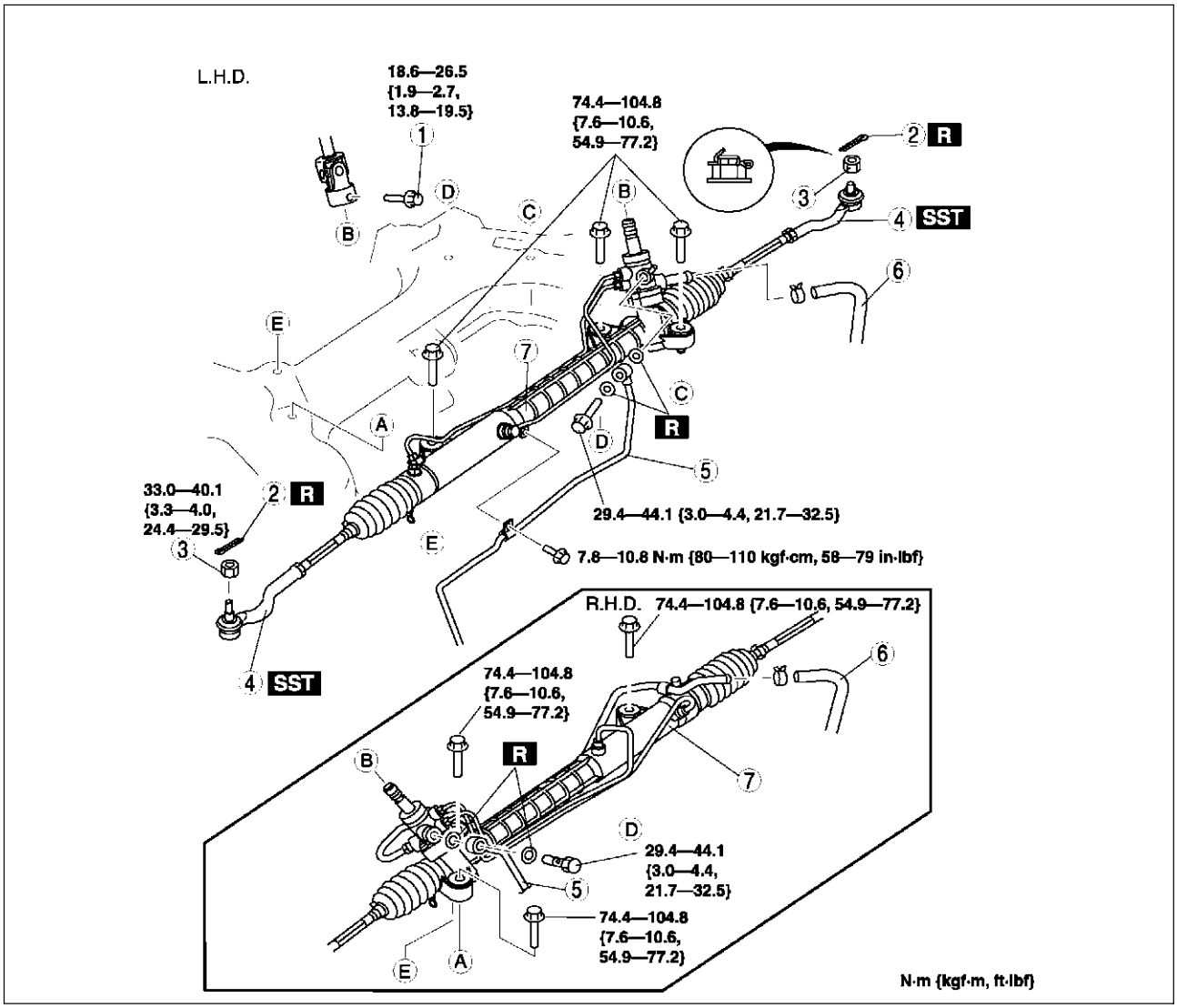

A6E0612W108

1	Bolt (intermediate shaft) (See N–11 Bolt (Intermediate Shaft) Removal Note) (See N–12 Bolt (Intermediate Shaft) Installation Note)
2	Cotter pin
3	Nuts (tie-rod end ball joint)
4	Tie-rod end ball joint (See N–11 Tie-rod End Ball Joint Removal Note)

5	Pressure pipe
6	Return pipe
7	Steering gear and linkage (See N–11 Steering Gear and Linkage Removal Note) (See N–12 Steering Gear and Linkage Installation Note)

Bolt (Intermediate Shaft) Removal Note

1. Mark the pinion shaft and gear housing for proper installation.

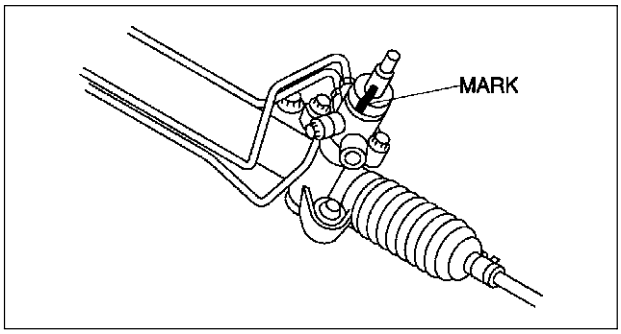

A6E0612W084

Tie-rod End Ball Joint Removal Note

1. Remove the tie rod-nut.
2. Separate the tie-rod end from the steering knuckle using the **SSTs**.

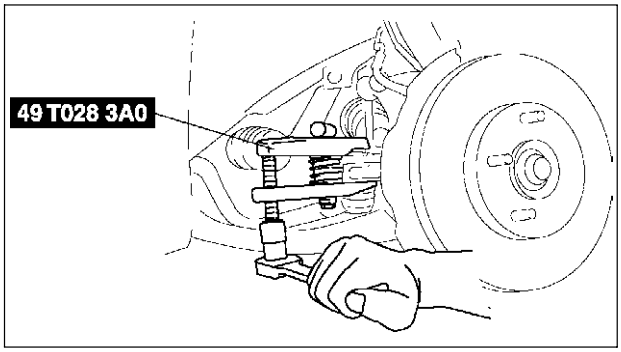

A6E0612W085

Steering Gear and Linkage Removal Note
L.H.D.

Caution

- **Excessively loosening the crossmember nuts may possibly cause the crossmember to fall off. The crossmember nuts must remain threaded on the studs when loosening.**

1. Support the crossmember using jack before removing the crossmember bracket.
2. Loosen the jack and lower the crossmember.
3. Remove the steering gear and linkage by pulling it from the left side.

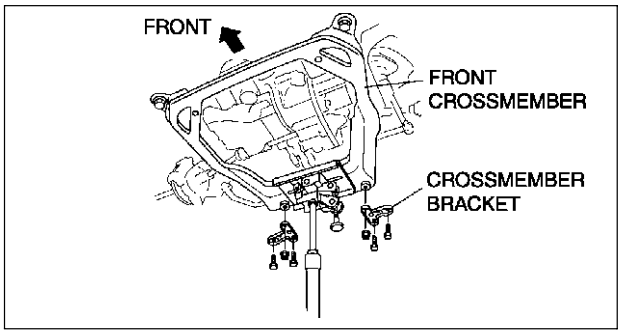

A6E0612W107

R.H.D.

1. Remove the steering gear and linkage by pulling it from the right side.

N

Steering Gear and Linkage Installation Note

1. Loosely tighten bolts.
2. Tighten the mounting bracket bolts to the specified torque in the order shown.

   Tightening torque
   74.4—104.8 N·m {7.6—10.6 kgf·m, 55—77 ft·lbf}

3. Tighten the crossmember installation nuts. (L.H.D.)

   Tightening torque
   Nut: 119.6—154.8 N·m {12.2—15.7 kgf·m, 89—114 ft·lbf}
   Bolt: 93.1—131.3 N·m {9.5—13.3 kgf·m, 69—96 ft·lbf}

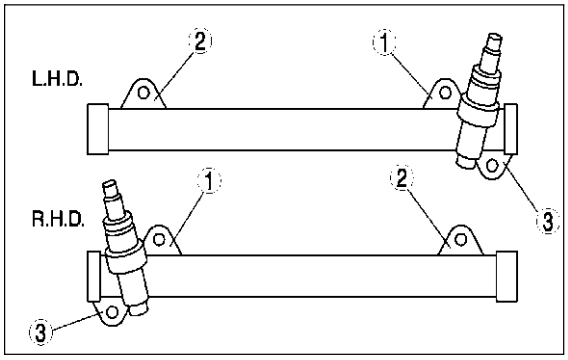

A6E0612W027

Bolt (Intermediate Shaft) Installation Note

1. Align the marks and install the intermediate shaft and bolt.

STEERING GEAR AND LINKAGE DISASSEMBLY

A6E661432960W02

Caution

- **Place copper plates, rag, or similar material in a vise, when securing the mounting bracket portion of the steering gear.**

1. Disassemble in the order indicated in the table.

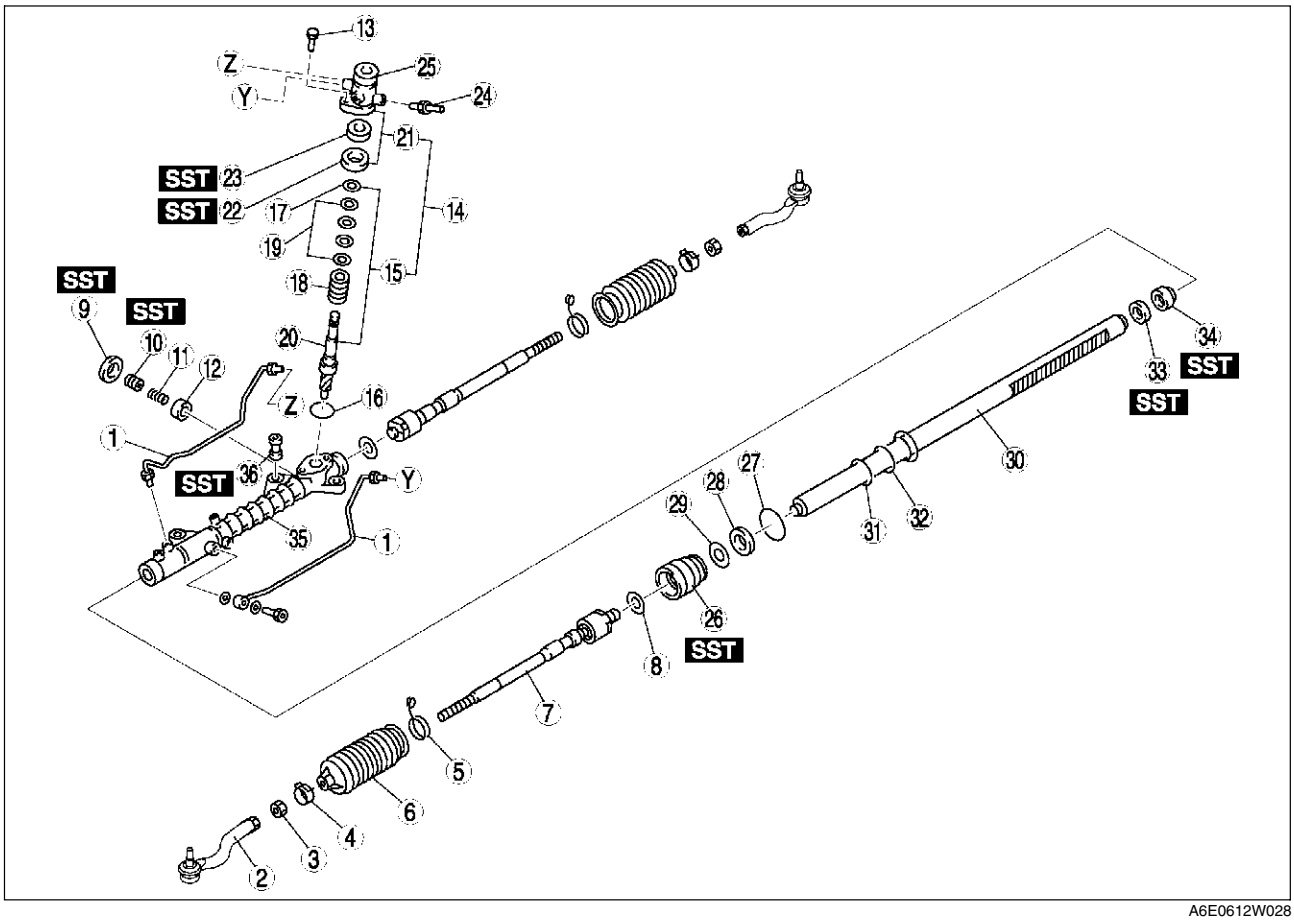

A6E0612W028

1	Oil pipe
2	Tie-rod end
3	Locknut
4	Boot clamp
5	Boot band
6	Boot
7	Tie rod (See N–13 Tie Rod Disassembly Note)
8	Washer
9	Locknut (adjusting cover) (See N–13 Locknut (Adjusting Cover) Disassembly Note)
10	Adjusting cover (See N–14 Adjusting Cover Disassembly Note)
11	Yoke spring
12	Support yoke
13	Bolt
14	Pinion shaft and housing component (See N–14 Pinion Shaft and Housing Component Disassembly Note)
15	Pinion shaft component (See N–14 Pinion Shaft Component Disassembly Note)
16	O-ring
17	Snap ring (See N–14 Snap Ring Disassembly Note)
18	Control valve component

19	Seal ring
20	Pinion shaft
21	Valve housing component
22	Upper bearing (See N–15 Upper Bearing, Oil Seal Disassembly Note)
23	Oil seal (See N–15 Upper Bearing, Oil Seal Disassembly Note)
24	Return pipe
25	Valve Housing
26	Holder (See N–15 Holder Disassembly Note)
27	O-ring
28	U-gasket
29	Backup ring
30	Steering rack
31	Seal ring
32	O-ring
33	Oil seal (See N–15 Oil Seal, Inner Guide Disassembly Note)
34	Inner guide (See N–15 Oil Seal, Inner Guide Disassembly Note)
35	Gear housing
36	Mounting rubber (See N–15 Mounting Rubber Disassembly Note)

N

Tie Rod Disassembly Note

1. Unclamp the washer.
2. Remove the tie rod.

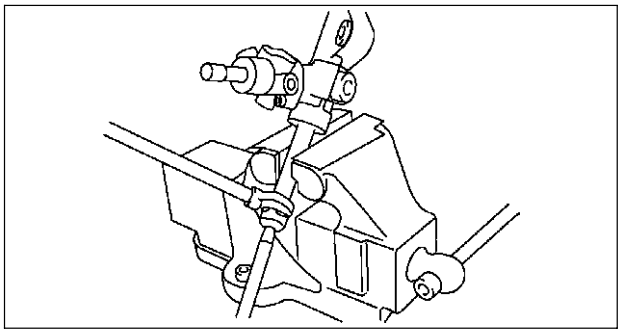

A6E0612W031

Locknut (Adjusting Cover) Disassembly Note

1. Remove the locknut using the **SST**.

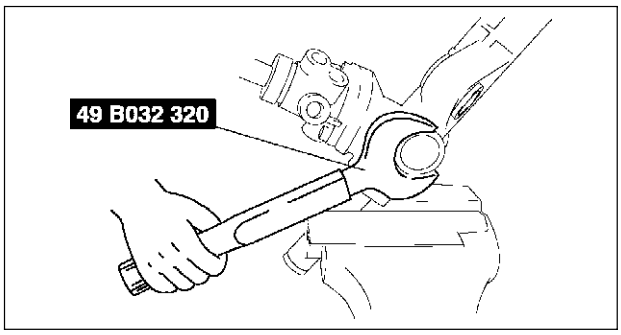

A6E0612W056

Adjusting Cover Disassembly Note

1. Remove the adjusting cover.

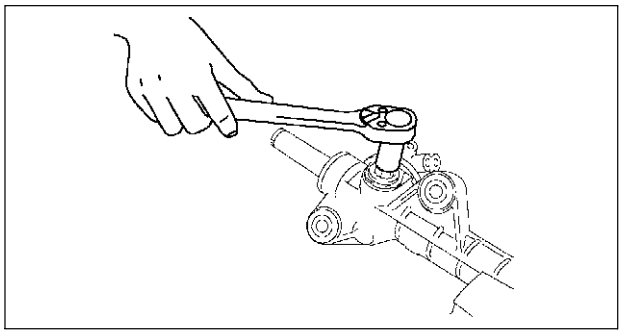

A6E0612W033

Pinion Shaft and Housing Component Disassembly Note

1. Hold the pinion shaft as shown, and pull out the pinion shaft and housing component.

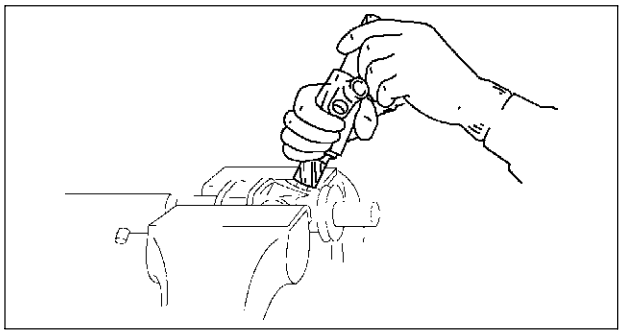

A6E0612W038

Pinion Shaft Component Disassembly Note

Note

- If the pinion shaft does not come out easily, remove it using a press.

1. Push out the pinion shaft componet from the valve housing as shown.

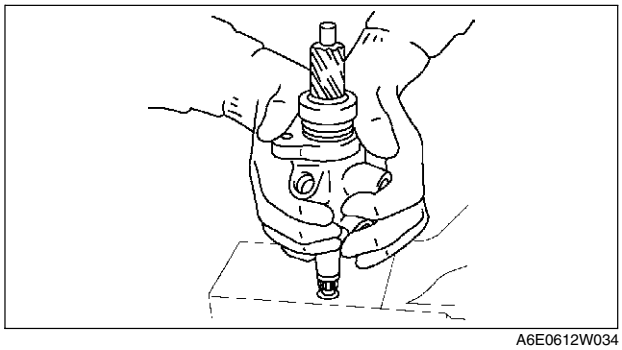

A6E0612W034

Snap Ring Disassembly Note

1. Carefully remove the snap ring without damaging the pinion shaft component.

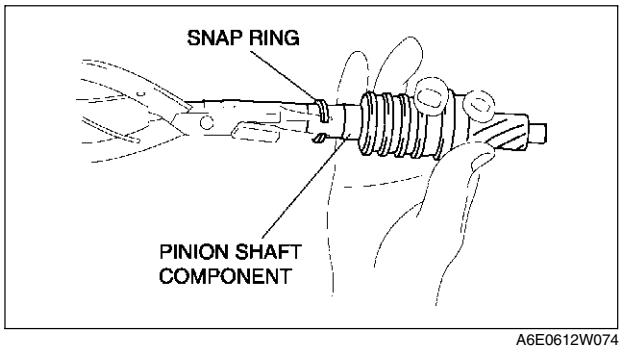

A6E0612W074

Upper Bearing, Oil Seal Disassembly Note

1. Set the **SST** as shown.
2. Using a press, remove the oil seal and upper bearing without applying pressure to the edge of the valve housing.

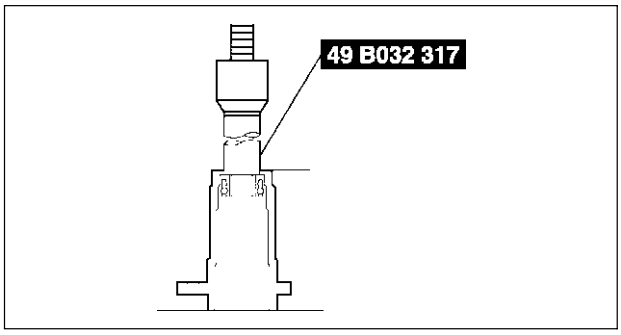

A6E0612W035

Holder Disassembly Note

1. Cut away the staked area by using a drill.

   Caution
   - **Carefully pull out the holder without damaging the U gasket.**

2. Disassemble the holder.

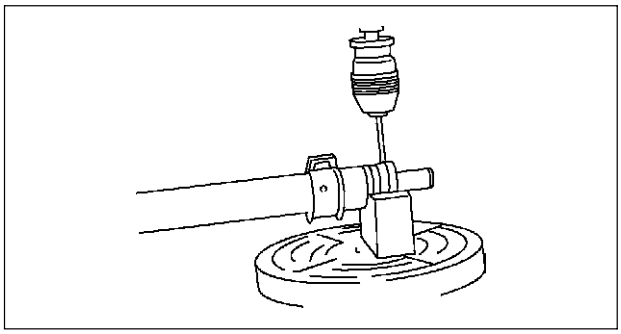

A6E0612W037

Oil Seal, Inner Guide Disassembly Note

1. Set the **SSTs** into the valve side.
2. Install the **SST** to the gear housing.
3. Press out the oil seal and inner guide.

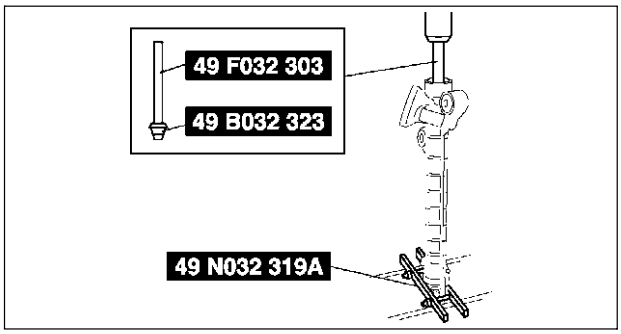

A6E0612W086

Mounting Rubber Disassembly Note

- Press the mounting rubber out from the gear housing using the **SSTs** and a press.

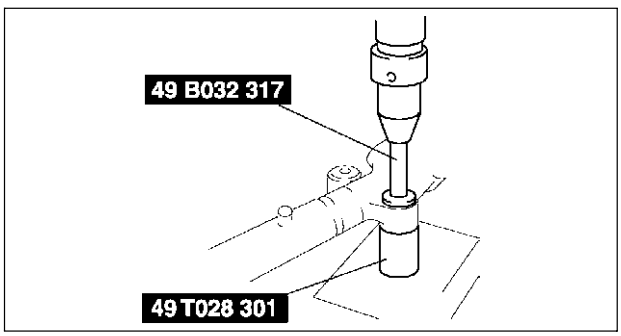

A6E0612W040

N

STEERING GEAR AND LINKAGE INSPECTION

A6E661432960W03

Rack Inspection

1. Inspect the rack for cracking, damage, and tooth wear. Replace it as necessary.
2. Measure the runout of the rack.

   Runout
   Near point A: 0.15 mm {0.006 in} max.
   Near point B: 0.20 mm {0.008 in} max.

3. If not within the specification, replace the rack.

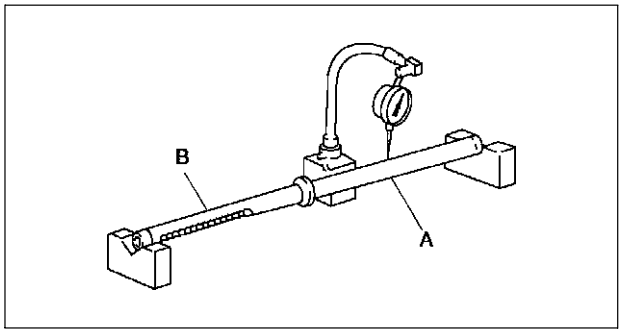

A6E0612W041

Tie-rod End Inspection

1. Inspect the tie-rod end for damage and boot cracks. Replace it as necessary.
2. Inspect the ball joint for looseness. Replace the tie-rod end as necessary.
3. Rotate the ball joint five times.
4. Measure the rotation torque of the ball joint using the **SST** and a pull scale.

   Rotation torque
   0.4—2.7 N·m {3.5—27.5 kgf·cm, 3.1—23.8 in·lbf}
   Pull scale reading
   3.4—25.5 N {0.35—2.60 kgf, 0.8—5.7 lbf}

5. If not within the specification, replace the tie-rod end.

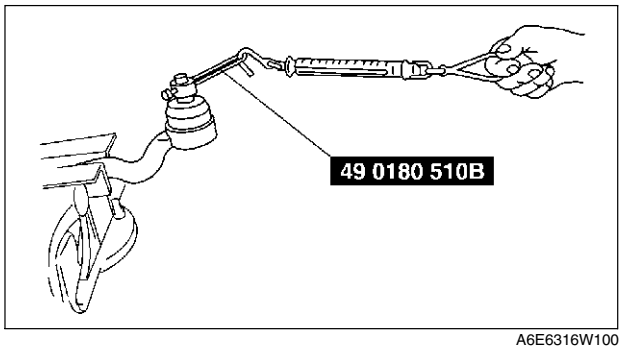

A6E6316W100

Tie rod Inspection

1. Inspect the tie rod for bending and damage. Replace it as necessary.
2. Inspect the ball joint for looseness. Replace the tie rod as necessary.
3. Swing the tie rod five times.
4. Measure the swinging torque using a pull scale.

   Swinging torque
   0.1—4.0 N·m {1—40.7 kgf·cm, 0.9—35.3 in·lbf}
   Pull scale reading
   0.6—24.5 N {0.06—2.49 kgf, 0.2—5.50 lbf}

5. If not within the specification, replace the tie-rod.

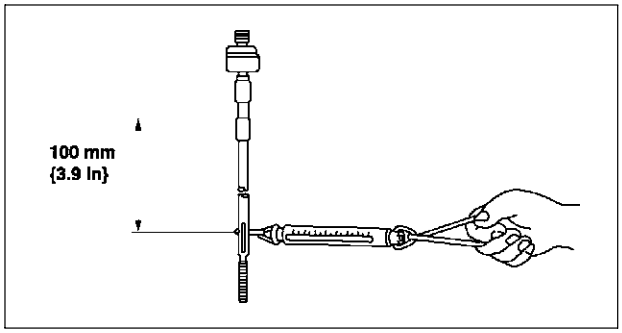

A6E0612W043

STEERING GEAR AND LINKAGE ASSEMBLY

A6E661432960W04

Caution

- **Place copper plates, rag, or similar material in a vise, when secure the mounting bracket portion of the steering gear.**

1. Assemble in the order indicated in the table.

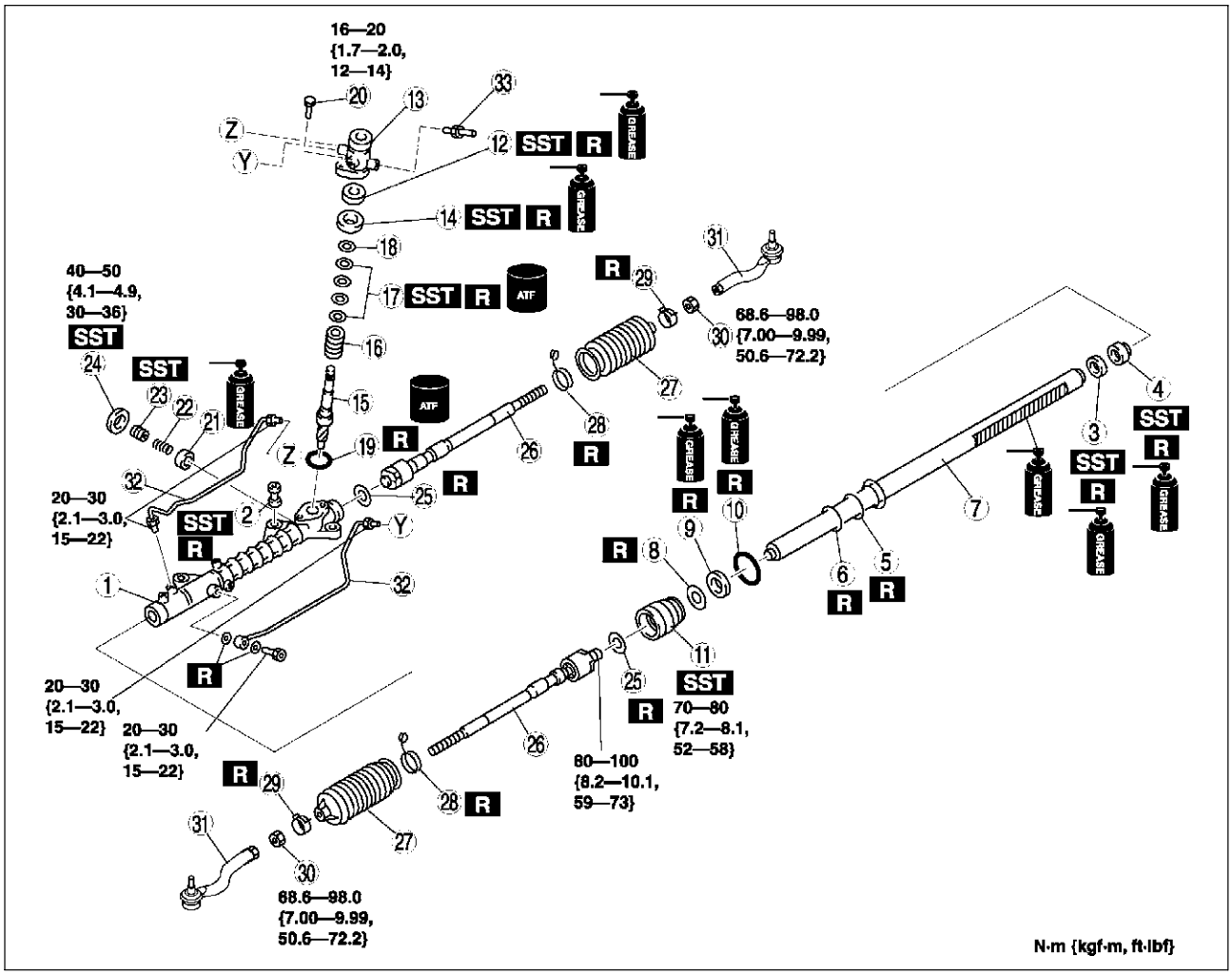

A6E0612W044

1	Gear housing
2	Mounting rubber (See N–18 Mounting Rubber Assembly Note)
3	Oil seal (See N–18 Oil Seal, Inner Guide Assembly Note)
4	Inner guide (See N–18 Oil Seal, Inner Guide Assembly Note)
5	O-ring
6	Seal ring
7	Steering rack
8	Backup ring
9	U-gasket
10	O-ring
11	Holder (See N–19 Holder Assembly Note)
12	Oil seal (See N–20 Oil Seal Assembly Note)
13	Valve housing
14	Upper bearing (See N–20 Upper Bearing Assembly Note)
15	Pinion shaft

16	Control valve
17	Seal ring (See N–20 Seal Ring Assembly Note)
18	Snap ring
19	O-ring
20	Bolt
21	Support yoke
22	Yoke spring
23	Adjusting cover (See N–20 Adjusting Cover Assembly Note)
24	Locknut (adjusting cover)
25	Washer
26	Tie rod
27	Boot
28	Boot band
29	Boot clamp
30	Locknut
31	Tie-rod end
32	Oil pipe
33	Return pipe

N

Mounting Rubber Assembly Note

1. Apply soapy water to the rubber part of the mounting rubber.
2. Press the mounting rubber until the mounting rubber end comes out completely from the gear housing using the **SSTs** and a press.

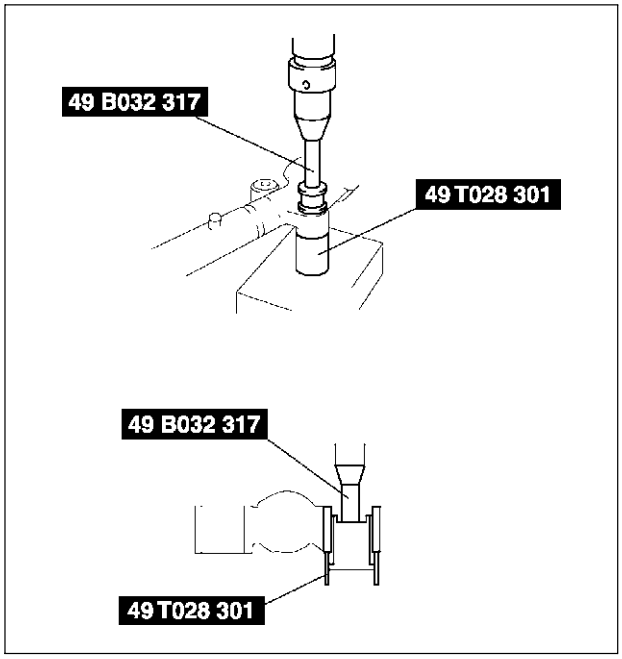

A6E0612W087

3. Reverse the gear housing, then press the mounting rubber until the mounting rubber end comes out completely from the other side. At this time, mounting rubber end and steel pipe are aligned.

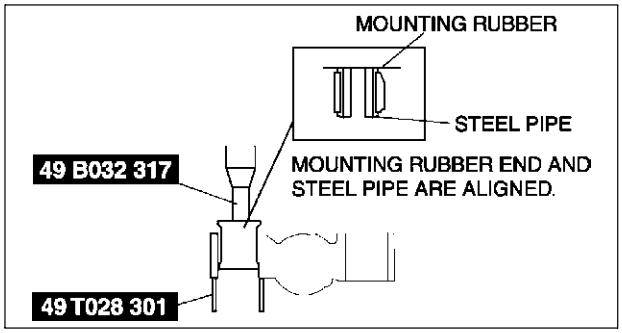

A6E0612W088

Oil Seal, Inner Guide Assembly Note

1. Install a new O-ring and a new seal ring to the rack's piston.
2. After installing the seal ring, seat it properly at the piston circumference.
3. Apply grease to a new oil seal and inner guide.
4. Install the oil seal to the **SST**.

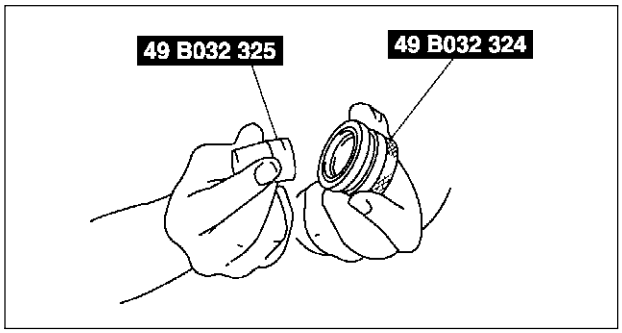

A6E0612W048

5. Using the **SST**, place the oil seal and inner guide at the edge of the steering rack's pinion, and remove the **SST**.

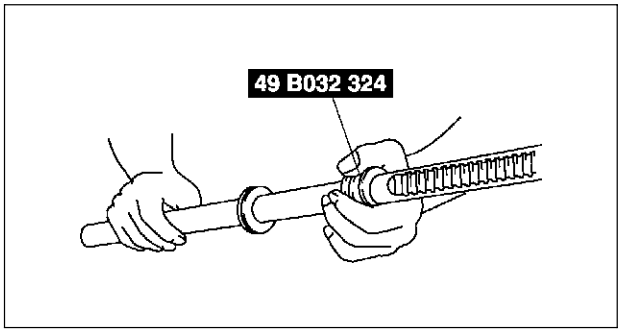

A6E0612W049

6. After installing the steering rack to the gear housing, press the oil seal and inner guide using the **SSTs** until the force required suddenly increases.

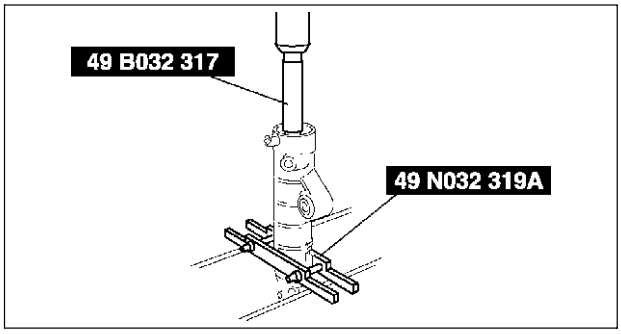

A6E0612W039

Holder Assembly Note

1. Apply grease to the U-gasket and O-ring.
2. Assemble the U-gasket, backup ring and O-ring into the holder.
3. Assemble the **SST** to the steering rack.

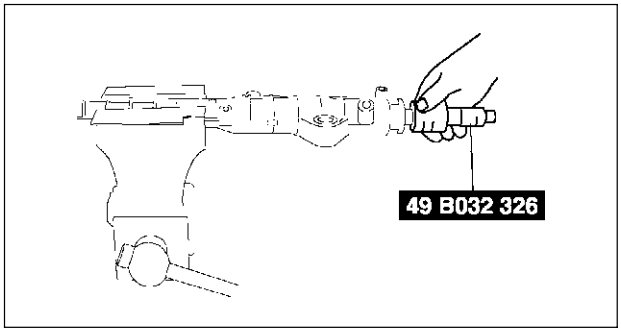

A6E0612W090

4. Stake the holder to the cylinder using a punch.

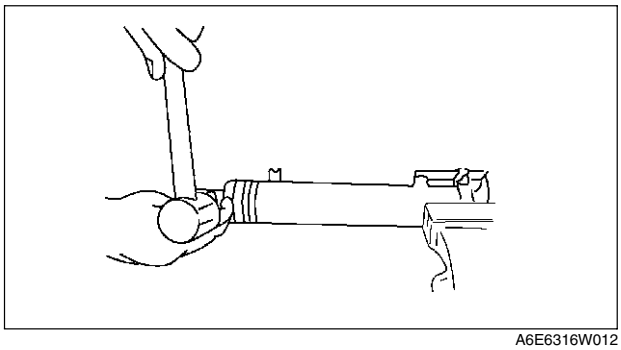

A6E6316W012

Oil Seal Assembly Note

1. Apply grease to a new oil seal.
2. Press in the new oil seal using the **SSTs**.

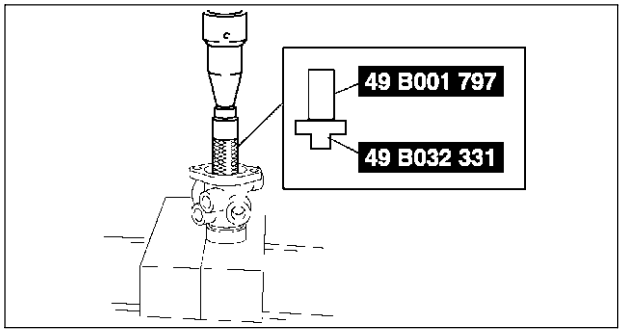

A6E0612W036

Upper Bearing Assembly Note

1. Apply grease to a new upper bearing.
2. Press in the upper bearing using the **SST**.

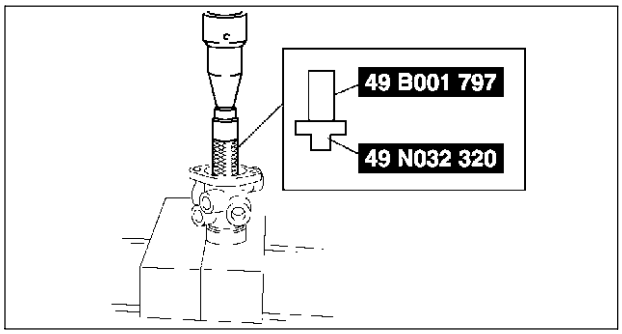

A6E0612W051

Seal Ring Assembly Note

1. Install a new seal ring to the valve part of the pinion shaft using the **SST**.
2. After installing it, seat it properly using the **SST**.
3. Install the snap ring.

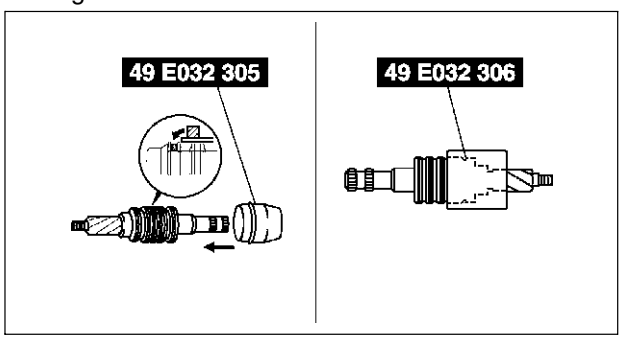

A6E0612W052

Adjusting Cover Assembly Note

1. Set the rack to the center position.
2. Tighten the adjusting cover to **4.9 N·m {50 kgf·cm, 36 in·lbf}** three times, then return it **25°** using the **SST**.
3. Apply sealant to the threads of the locknut.
4. Attach the locknut.

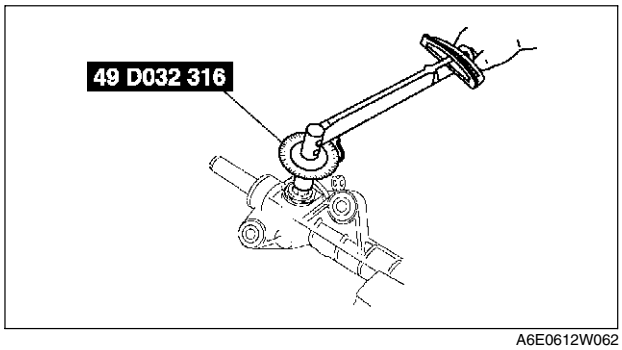

A6E0612W062

5. Measure the pinion torque using the **SST** and a pull scale.

Standard
Center of rack ±90°
0.8—1.2 N·m
{8.2—12.2 kgf·cm, 5.8—8.8 in·lbf}
[Pull scale reading
8—12 N {0.9—1.2 kgf, 1.8—2.6 lbf}]
Except center of rack ±90°
Less than 1.6 N·m
{16.3 kgf·cm, 11.8 in·lbf}
[Pull scale reading
Less than 16.7 N {1.7 kgf, 3.8 lbf}]

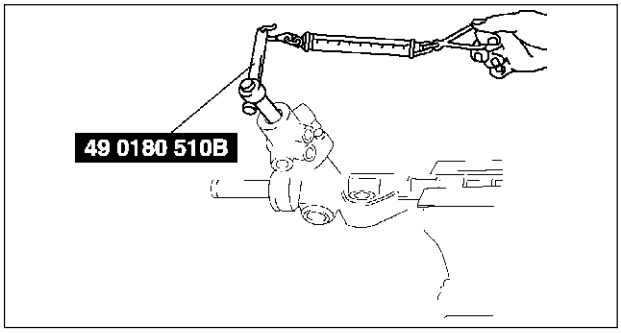

A6E0612W042

6. If not as specified, repeat steps 2 through 5.
7. Install the locknut using the **SST** (49 B032 320).

Tightening torque
40—49 N·m {4.1—4.9 kgf·m, 30—36 ft·lbf}

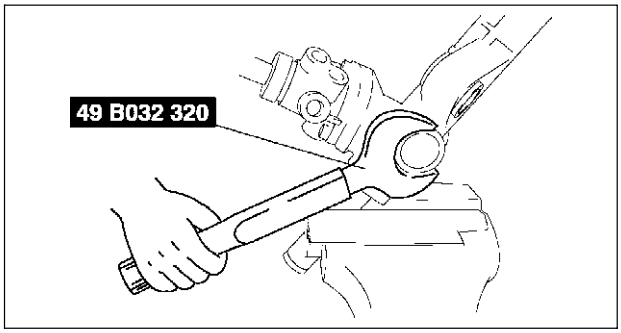

A6E0612W056

N

Hermetic sealing inspection
1. Connect the **SSTs** to the power cylinder section of the gear housing.
2. Apply **53.3 kPa {400 mmHg, 15.7 inHg}** vacuum with a vacuum pump and verify that it is held for at least **30 seconds**.
3. If the vacuum is not held, replace the oil seal.

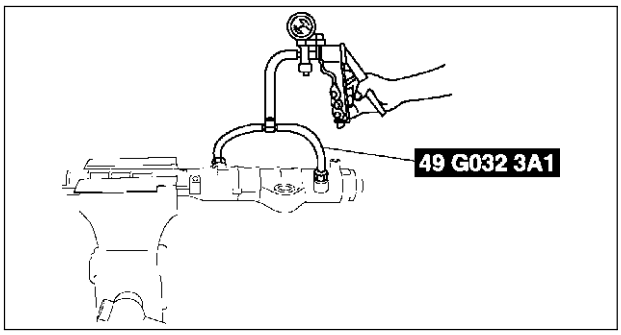

A6E0612W054

POWER STEERING OIL PUMP REMOVAL/INSTALLATION

A6E661432650W01

1. Remove in the order indicated in the table.
2. Install in the reverse order of removal.

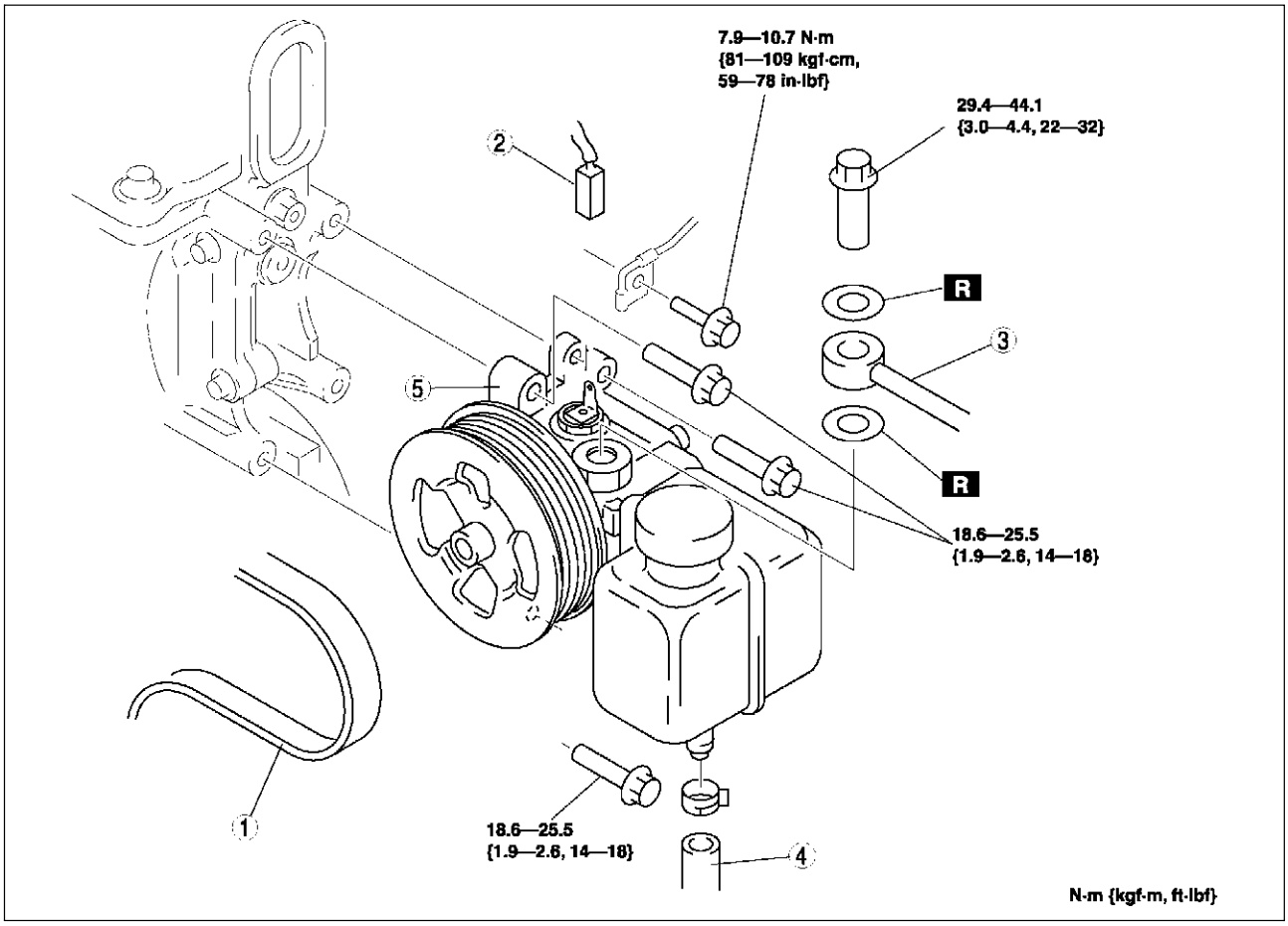

A6E0612W092

1	Drive belt
2	Pressure switch connector
3	Pressure pipe

4	Suction hose
5	Power steering oil pump

POWER STEERING OIL PUMP DISASSEMBLY/ASSEMBLY

A6E661432650W02

Note

- The following procedure is for replacement of the O-ring and oil seal only. Replace the pump component if other repairs are necessary.

1. Disassemble in the order indicated in the table.
2. Assemble in the reverse order of disassembly.

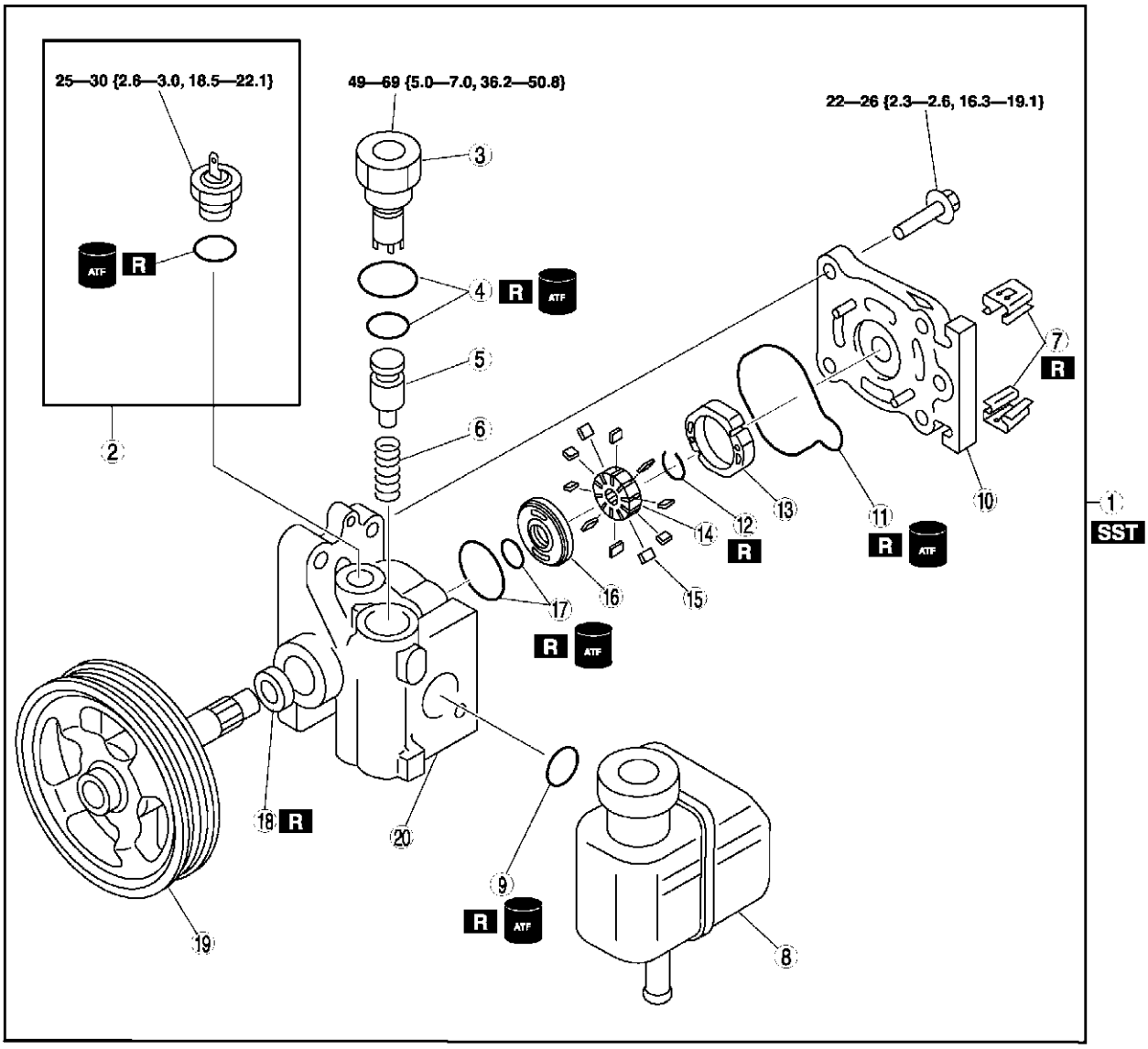

A6E0612W068

1	Power steering oil pump component (See N–24 Power Steering Oil Pump Component Disassembly Note)
2	Pressure switch component
3	Connector
4	O-rings
5	Control valve
6	Spring
7	Clip (See N–24 Clip Disassembly Note) (See N–24 Clip Assembly Note)
8	Power steering reservoir tank
9	O-ring
10	Rear pump body (See N–25 Rear Pump Body Assembly Note)

11	O-ring
12	Clip
13	Cam ring (See N–25 Cam Ring Assembly Note)
14	Rotor
15	Vane (See N–25 Vane Assembly Note)
16	Side plate
17	O-ring
18	Oil seal (See N–25 Oil Seal Assembly Note)
19	Shaft component
20	Front pump body

N

Power Steering Oil Pump Component Disassembly Note

1. Secure the power pressure oil pump using the **SST**.

Caution

- **Use the SST to prevent damage to the pump when securing it in a vise.**

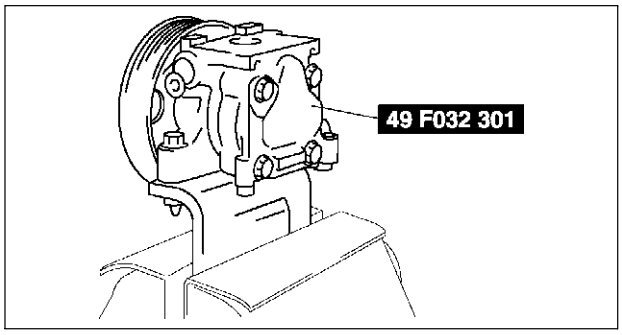

A6E0612W070

Clip Disassembly Note

1. Lift up the clip tab using a flathead screwdriver.
2. Remove the clip pushing with a flathead screwdriver and a hammer as shown in the figure.

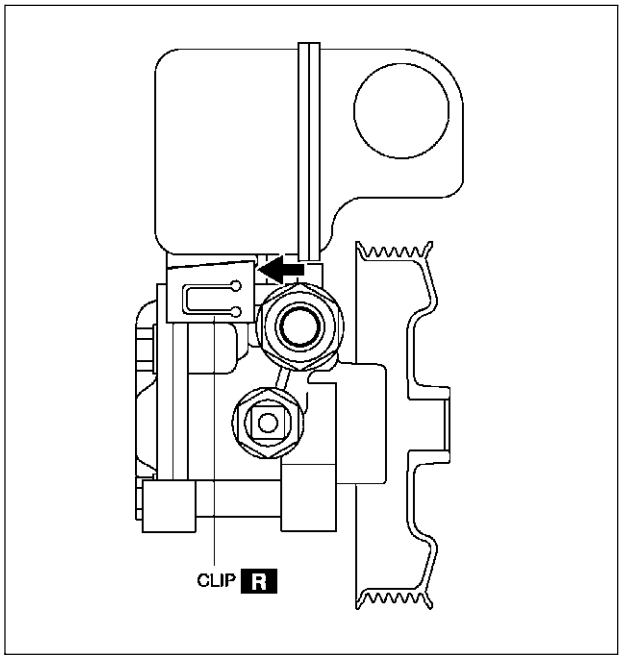

A6E0612W098

Clip Assembly Note

1. Push the clip slowly to the direction shown in the figure.
2. Confirm that the clip tab is caught correctly.

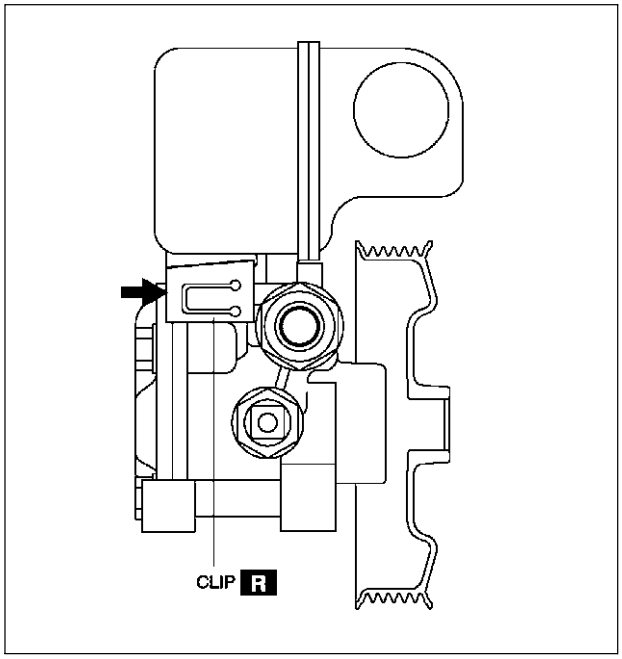

A6E0612W100

Oil Seal Assembly Note

1. Install the oil seal in the front pump body using the **SST** and plastic hammer.

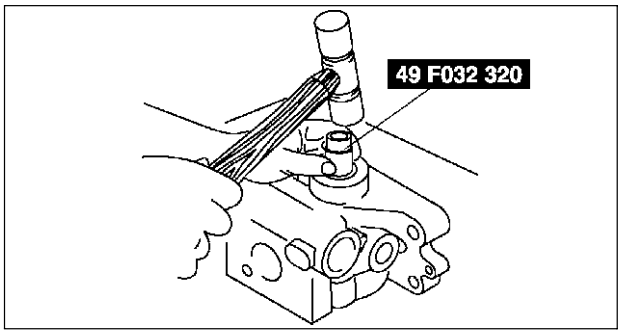

A6J6612W100

Vane Assembly Note

1. Place the vanes in the rotor with the rounded edges contacting the cam.

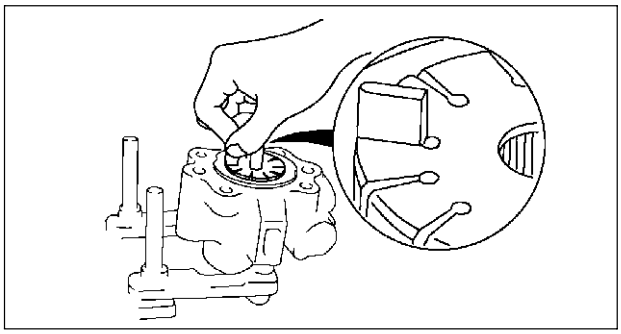

A6E6316W013

Cam Ring Assembly Note

1. Install the cam ring in the front pump body with the mark facing upward.

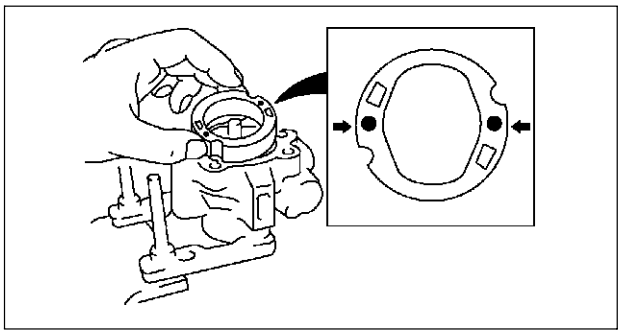

A6E6316W014

Rear Pump Body Assembly Note

1. After installing the rear body, manually turn the shaft to verify that it rotates smoothly.

BRAKING SYSTEM

LOCATION INDEX P-3
CONVENTIONAL BRAKE LOCATION INDEX ... P-3
PARKING BRAKE LOCATION INDEX P-4
ABS/TCS LOCATION INDEX P-4
DSC LOCATION INDEX P-5
GENERAL PROCEDURES P-6
PRECAUTION (BRAKES) P-6
CONVENTIONAL BRAKE SYSTEM P-6
AIR BLEEDING P-6
VACUUM HOSE CHECK VALVE INSPECTION (POWER BRAKE UNIT) P-7
BRAKE PEDAL INSPECTION P-7
BRAKE SWITCH INSPECTION P-8
BRAKE PEDAL REMOVAL/INSTALLATION P-9
MASTER CYLINDER REMOVAL/INSTALLATION P-10
FLUID LEVEL SENSOR INSPECTION P-12
MASTER CYLINDER DISASSEMBLY/ASSEMBLY P-12
POWER BRAKE UNIT REMOVAL/INSTALLATION P-14
POWER BRAKE UNIT INSPECTION P-14
DUAL PROPORTIONING VALVE INSPECTION (WITHOUT ABS) P-16
DUAL PROPORTIONING VALVE REPLACEMENT (WITHOUT ABS) P-16
FRONT BRAKE (DISC) INSPECTION P-17
FRONT BRAKE (DISC) REMOVAL/INSTALLATION P-20
DISC PAD (FRONT) REPLACEMENT P-21
CALIPER (FRONT) DISASSEMBLY/ASSEMBLY P-22
REAR BRAKE (DISC) INSPECTION P-23
REAR BRAKE (DISC) REMOVAL/INSTALLATION P-24
DISC PAD (REAR) REPLACEMENT P-25
PARKING BRAKE SYSTEM P-26
PARKING BRAKE (LEVER TYPE) INSPECTION P-26
PARKING BRAKE (LEVER TYPE) ADJUSTMENT P-26
PARKING BRAKE (LEVER TYPE) REMOVAL/INSTALLATION P-26
ABS/TCS P-27
ABS (ABS/TCS) HU/CM SYSTEM INSPECTION P-27
ABS (ABS/TCS) HU/CM REMOVAL/INSTALLATION P-28
ABS (ABS/TCS) or DSC HU/CM CONFIGURATION P-29
ABS (ABS/TCS) HU/CM INSPECTION P-29
TCS (DSC) OFF SWITCH REMOVAL/INSTALLATION P-31
TCS (DSC) OFF SWITCH INSPECTION P-32
FRONT ABS WHEEL-SPEED SENSOR REMOVAL/INSTALLATION P-32
FRONT/REAR ABS WHEEL-SPEED SENSOR INSPECTION P-33
REAR ABS WHEEL-SPEED SENSOR REMOVAL/INSTALLATION P-34
DYNAMIC STABILITY CONTROL P-35
DSC SYSTEM INSPECTION P-35
DSC HU/CM REMOVAL/INSTALLATION P-38
DSC HU/CM INSPECTION P-40
COMBINE SENSOR REMOVAL/INSTALLATION P-42
COMBINE SENSOR INSPECTION P-43
COMBINE SENSOR INITIALIZATION PROCEDURE P-44
STEERING ANGLE SENSOR REMOVAL/INSTALLATION P-44
STEERING ANGLE SENSOR INSPECTION P-44
DSC OFF SWITCH REMOVAL/INSTALLATION P-44
DSC OFF SWITCH INSPECTION P-44
ON-BOARD DIAGNOSTIC (ABS/TCS) P-45
ABS (ABS/TCS) SYSTEM WIRING DIAGRAM P-45
ABS (ABS/TCS) ON-BOARD DIAGNOSIS P-46
DTC B1318 ..... P-50
DTC B1342 ..... P-52
DTC C1095, C1096 ..... P-52
DTC C1119 ..... P-54
DTC C1140 ..... P-55
DTC C1145, C1155, C1165, C1175 ..... P-56
DTC C1148, C1158, C1168, C1178, C1233, C1234, C1235, C1236 ..... P-59
DTC C1186, C1266 ..... P-62
DTC C1194, C1198, C1210, C1214, C1242, C1246, C1250, C1254 ..... P-63
DTC C1414 ..... P-64
DTC C1508 ..... P-64
DTC C1510, C1511, C1512, C1513 ..... P-64
DTC U2021 ..... P-65
ON-BOARD DIAGNOSTIC (DYNAMIC STABILITY CONTROL) P-66
DSC SYSTEM WIRING DIAGRAM P-66
DSC ON-BOARD DIAGNOSIS P-67
DTC B1318 ..... P-72
DTC B1342 ..... P-74
DTC B1483, B1484, B1486 ..... P-74
DTC B1627 ..... P-76
DTC B2477 ..... P-77
DTC C1095, C1096 ..... P-77
DTC C1119 ..... P-79
DTC C1125 ..... P-80
DTC C1140 ..... P-81
DTC C1145, C1155, C1165, C1175 ..... P-81
DTC C1148, C1158, C1168, C1178, C1233, C1234, C1235, C1236 ..... P-83
DTC C1186, C1266 ..... P-86
DTC C1194, C1198, C1210, C1214, C1242, C1246, C1250, C1254, C1400, C1410, C1957, C1958 ..... P-87
DTC C1280, C1730, C1951, C1952, C1959 ..... P-88

DTC C1414 ..... P-91
DTC C1507, C1508 ..... P-91
DTC C1510, C1511, C1512, C1513 ..... P-92
DTC C1953, C1954 ..... P-92
DTC C1955, C1956 ..... P-93
DTC U2021 ..... P-96
TROUBLESHOOTING (ABS/TCS/DYNAMIC STABILITY CONTROL) P-97
SYSTEM WIRING DIAGRAM P-97
FOREWORD P-99
PRECAUTION P-99
SYMPTOM TROUBLESHOOTING P-104
NO.1 ABS WARNING LIGHT, BRAKE SYSTEM WARNING LIGHT, TCS OFF LIGHT DO NOT ILLUMINATE WITH IGNITION SWITCH ON P-107
NO.2 NEITHER ABS WARNING LIGHT NOR BRAKE SYSTEM WARNING LIGHTILLUMINATE WITH IGNITION SWITCH ON P-108
NO.3 ABS WARNING LIGHT DOES NOT ILLUMINATE WITH IGNITION SWITCH ON P-109
NO.4 BRAKE SYSTEM WARNING LIGHT DOES NOT ILLUMINATE WITH IGNITION SWITCH ON P-109
No.5 TCS OFF LIGHT DOES NOT ILLUMINATE WITH IGNITION SWITCH ON P-110
No.6 BOTH ABS WARNING LIGHT AND BRAKE SYSTEM WARNING LIGHT STAY ON MORE THAN 4 SECONDS WITH IGNITION SWITCH ON P-111
No.7 ABS WARNING LIGHT STAYS ON MORE THAN 4 SECONDS WITH IGNITION SWITCH ON P-113
NO.8 BRAKE SYSTEM WARNING LIGHT STAYS ON MORE THAN 4 SECONDS WITH IGNITION SWITCH ON P-114
NO.9 TCS OFF LIGHT STAYS ON MORE THAN 4 SECONDS WITH IGNITION SWITCH ON P-116
NO.10 TCS DOES NOT WORK CORRECTLY P-117
NO.11 THERE IS MALFUNCTION IN THE SYSTEM EVEN THOUGH ABS WARNING LIGHT, BRAKE SYSTEM WARNING LIGHT, TCS OFF LIGHT DO NOT ILLUMINTE P-117
NO.1 ANY OF THE FOLLOWING LIGHTS DO NOT ILLUMINATE WITH IGNITION SWITCH ON: (ABS WARNING LIGHT, BRAKE SYSTEM WARNING LIGHT, DSC INDICATOR LIGHT AND/OR TCS-OFF LIGHT) P-117
NO.2 ANY OF THE FOLLOWING LIGHTS STAY ON: (ABS WARNING LIGHT, BRAKE SYSTEM WARNING LIGHT, DSC INDICATOR LIGHT AND/OR TCS-OFF LIGHT) P-119
NO.3 THERE IS A MALFUNCTION IN THE SYSTEM EVEN THOUGH ABS WARNING LIGHT, BRAKE SYSTEM WARNING LIGHT, DSC INDICATOR LIGHT AND TCS-OFF LIGHT DO NOT ILLUMINATE P-120
NO.4 ABS OR TCS*1 OPERATES FREQUENTLY/TCS DOES NOT WORK CORRECTLY*1: DSC SYSTEM FUNCTION CONTAINs TRACTION CONTROL FUNCTION, DSC INDICATOR LIGHT GOES ON AND OFF WHILE DSC OPERATES P-120
NO.5 DSC*2 OPERATES FREQUENTLY/DSC DOES NOT WORK CORRECTLY*2: DSC INDICATOR LIGHT GOES ON AND OFF WHILE DSC OPERATES P-121

LOCATION INDEX

CONVENTIONAL BRAKE LOCATION INDEX

A6E690001015W01

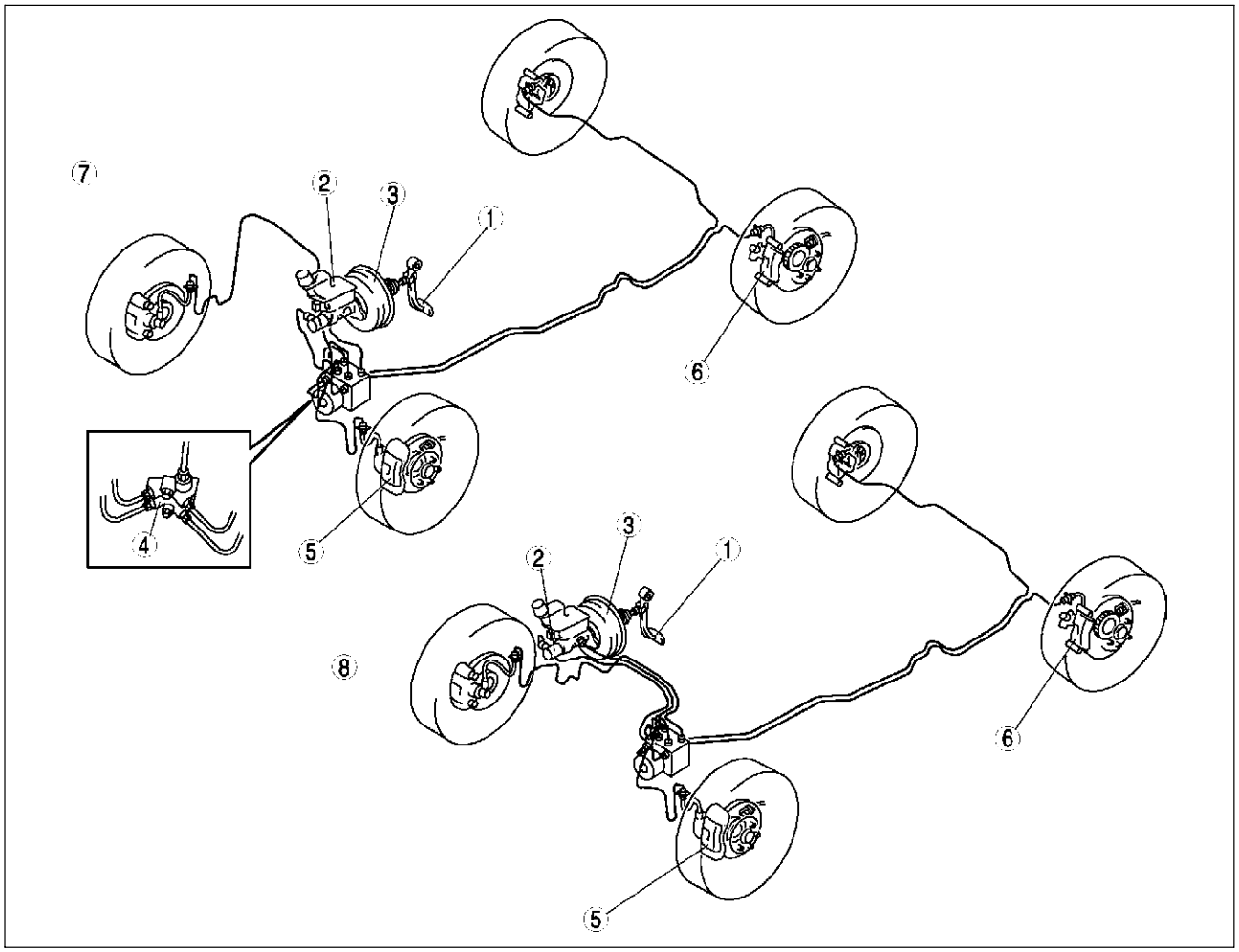

A6E6900W001

1	Brake pedal (See P–7 BRAKE PEDAL INSPECTION) (See P–9 BRAKE PEDAL REMOVAL/INSTALLATION) (See P–8 BRAKE SWITCH INSPECTION)
2	Master cylinder (See P–10 MASTER CYLINDER REMOVAL/INSTALLATION) (See P–12 FLUID LEVEL SENSOR INSPECTION) (See P–12 MASTER CYLINDER DISASSEMBLY/ASSEMBLY)
3	Power brake unit (See P–14 POWER BRAKE UNIT INSPECTION) (See P–14 POWER BRAKE UNIT REMOVAL/INSTALLATION)

4	Dual proportioning valve (without ABS) (See P–16 DUAL PROPORTIONING VALVE INSPECTION (WITHOUT ABS)) (See P–16 DUAL PROPORTIONING VALVE REPLACEMENT (WITHOUT ABS))
5	Front brake (disc) (See P–17 FRONT BRAKE (DISC) INSPECTION) (See P–20 FRONT BRAKE (DISC) REMOVAL/INSTALLATION) (See P–22 CALIPER (FRONT) DISASSEMBLY/ASSEMBLY)
6	Rear brake (disc) (See P–23 REAR BRAKE (DISC) INSPECTION) (See P–24 REAR BRAKE (DISC) REMOVAL/INSTALLATION)
7	L.H.D.
8	R.H.D.

PARKING BRAKE LOCATION INDEX

A6E690001015W02

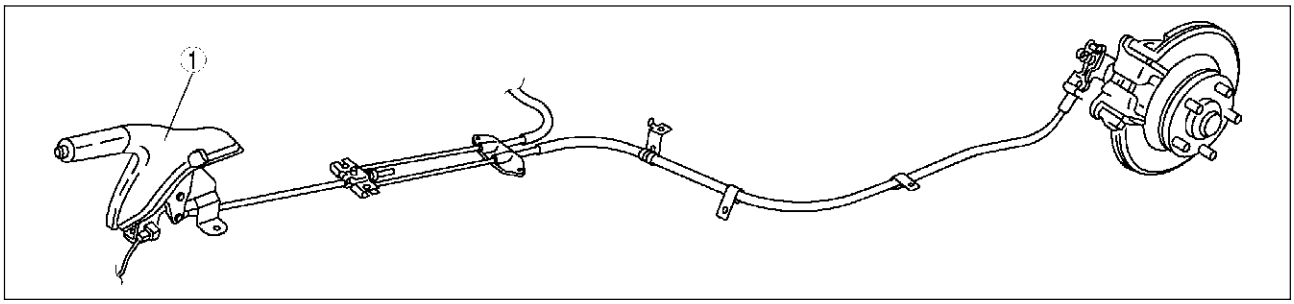

A6E6900W005

1	Parking bake lever (SeeP–26 PARKING BRAKE (LEVER TYPE) INSPECTION) (SeeP–26 PARKING BRAKE (LEVER TYPE) ADJUSTMENT) (SeeP–26 PARKING BRAKE (LEVER TYPE) REMOVAL/INSTALLATION)

ABS/TCS LOCATION INDEX

A6E690001015W03

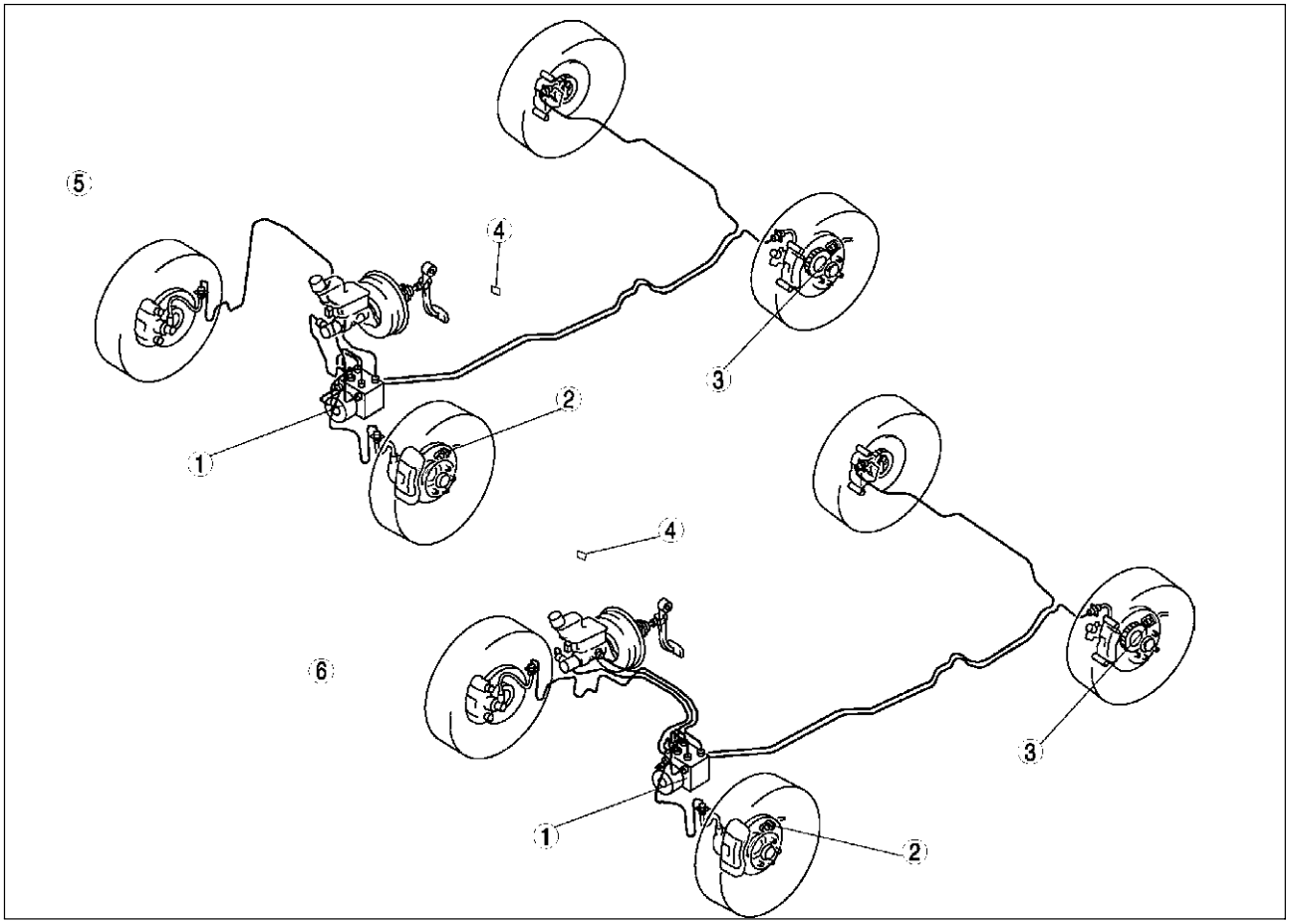

A6E6900W003

1	ABS (ABS/TCS) HU/CM (SeeP–27 ABS (ABS/TCS) HU/CM SYSTEM INSPECTION) (SeeP–29 ABS (ABS/TCS) HU/CM INSPECTION) (SeeP–28 ABS (ABS/TCS) HU/CM REMOVAL/INSTALLATION) (SeeP–29 ABS (ABS/TCS) or DSC HU/CM CONFIGURATION)

2	Front ABS wheel-speed sensor (SeeP–32 FRONT ABS WHEEL-SPEED SENSOR REMOVAL/INSTALLATION) (SeeP–33 FRONT/REAR ABS WHEEL-SPEED SENSOR INSPECTION)

3	Rear ABS wheel-speed sensor (SeeP–34 REAR ABS WHEEL-SPEED SENSOR REMOVAL/INSTALLATION)
4	TCS OFF switch (SeeP–31 TCS (DSC) OFF SWITCH REMOVAL/INSTALLATION) (SeeP–32 TCS (DSC) OFF SWITCH INSPECTION)

5	L.H.D.
6	R.H.D.

DSC LOCATION INDEX

A6E690001015W04

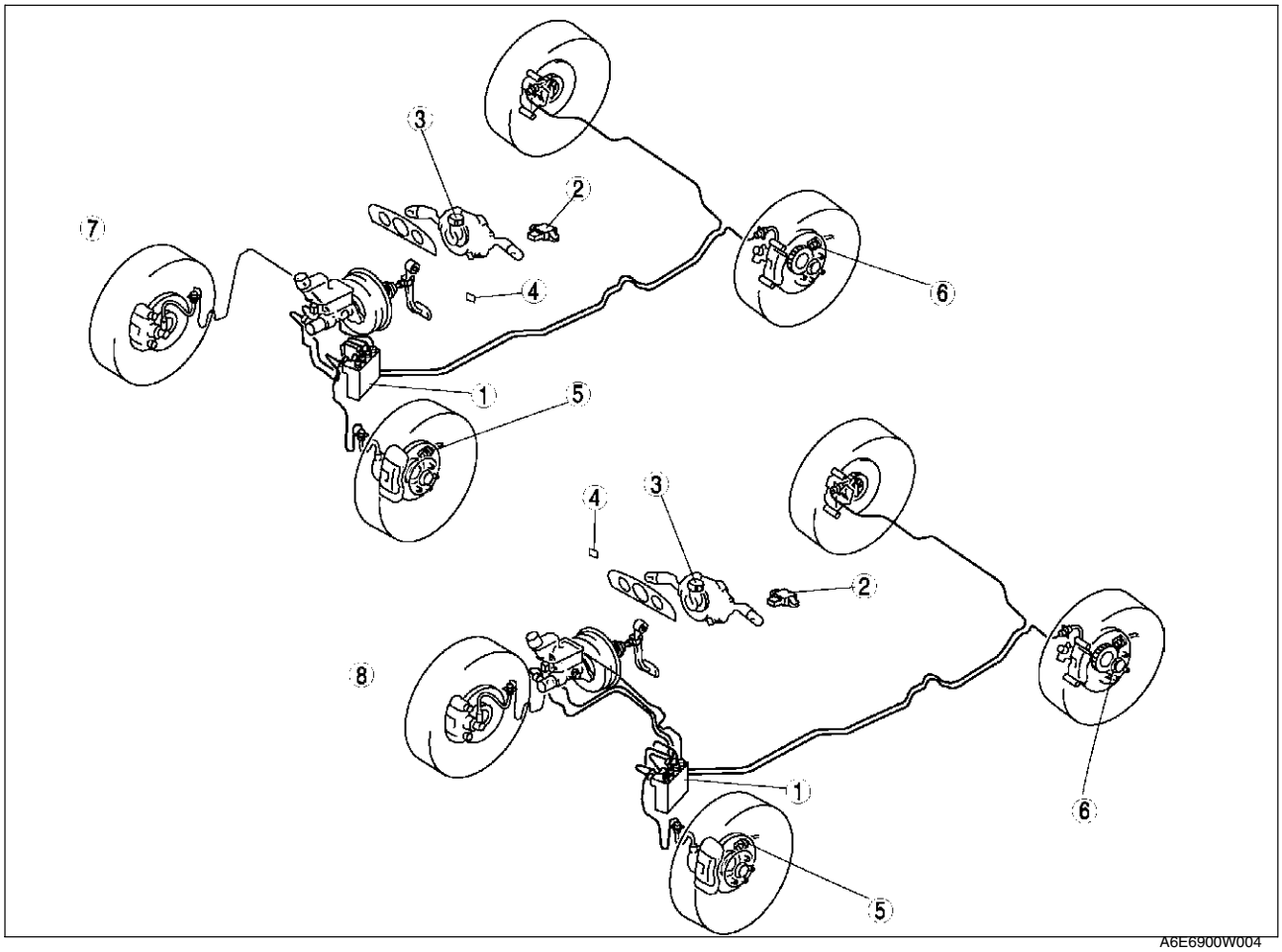

A6E6900W004

1	DSC HU/CM (SeeP–40 DSC HU/CM INSPECTION) (SeeP–38 DSC HU/CM REMOVAL/INSTALLATION) (SeeP–40 DSC HU/CM INSPECTION)
2	Combine sensor (SeeP–42 COMBINE SENSOR REMOVAL/INSTALLATION) (SeeP–43 COMBINE SENSOR INSPECTION) (SeeP–44 COMBINE SENSOR INITIALIZATION PROCEDURE)
3	Steering angle sensor (SeeP–44 STEERING ANGLE SENSOR REMOVAL/INSTALLATION) (SeeP–44 STEERING ANGLE SENSOR INSPECTION)

4	DSC OFF switch (SeeP–31 TCS (DSC) OFF SWITCH REMOVAL/INSTALLATION) (SeeP–32 TCS (DSC) OFF SWITCH INSPECTION)
5	Front wheel-speed sensor (SeeP–32 FRONT ABS WHEEL-SPEED SENSOR REMOVAL/INSTALLATION) (SeeP–33 FRONT/REAR ABS WHEEL-SPEED SENSOR INSPECTION)
6	Rear wheel-speed sensor (SeeP–34 REAR ABS WHEEL-SPEED SENSOR REMOVAL/INSTALLATION)
7	L.H.D.
8	R.H.D.

GENERAL PROCEDURES

PRECAUTION (BRAKES)

A6E691001020W01

Wheels and Tires Removal/Installation

1. The removal and installation procedures for the wheels and tires are not mentioned in this section. When a wheel is removed, tighten it to **88—118 N·m {9.0—12.0 kgf·m, 65.0—87.0 ft·lbf}**.

Brake Lines Disconnection/Connection

Caution
- **Brake fluid will damage painted surfaces. If brake fluid does get on a painted surface, wipe it off immediately.**

1. Tighten the brake pipe flare nut using the **SST** (49 0259 770B). Be sure to modify the brake pipe flare nut tightening torque to allow for use of a torque wrench-**SST** combination.
   - If any brake line has been disconnected anytime during the procedure, add brake fluid, bleed the brakes, and inspect for leakage after the procedure has been completed.

Connectors Disconnection

1. Disconnect the negative battery cable before doing any work that requires handling of connectors. Reconnect the negative battery cable only after the work is completed.

ABS, ABS/TCS, or DSC Components Operations

1. Make sure that there are no DTCs in the ABS, ABS/TCS, or DSC memory after working on ABS, ABS/TCS or DSC components.
   - If there are any DTCs in the memory, clear them.

CONVENTIONAL BRAKE SYSTEM

AIR BLEEDING

A6E691243001W01

Caution
- **Maintain the fluid level in the reservoir tank properly while bleeding the air.**

Specified fluid

European (L.H.D. U.K.) specs.	SAE J1703, FMVSS 116 DOT3 OR DOT4
GCC specs.	SAE J1703, FMVSS 116 DOT3

Note
- The brakes should be bled whenever a brake line is disconnected. If a hydraulic line is disconnected at the master cylinder, start at the slave cylinder farthest from the brake master cylinder, and move to the next farthest slave cylinder until all four cylinders have been bled. If the disconnection point is anywhere except the master cylinder, start at the point closest to the disconnection, and move to the next closest slave cylinder until all four cylinders have been bled.

1. Remove the bleeder cap and attach a vinyl tube to the bleeder screw.
2. Place the other end of the vinyl tube in a clear, fluid-filled container.
3. One person should depress the brake pedal a few times, and then hold it in the depressed position.

4. A second person should loosen the bleeder screw, drain out the fluid and close the screw using the **SST**.

Tightening torque
Front:6.9—9.8 N·m
{71—99 kgf·cm, 62—86 in·lbf}
Rear:5.9—8.8 N·m
{61—89 kgf·cm, 53—77 in·lbf}

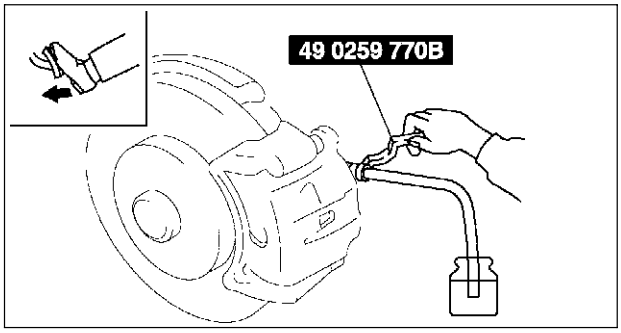

A6E6912W001

5. Repeat steps 3 and 4 until no air bubbles are seen.
6. Bleed air from each component by following the procedure above.
7. After air bleeding, check the following:
   - Brake operation
   - fluid leakage
   - fluid level

VACUUM HOSE CHECK VALVE INSPECTION (POWER BRAKE UNIT)

A6E691243980W01

1. Remove the clamps and vacuum hose.
2. Apply both suction and pressure to the engine-side hose, and verify that air blows only toward that side.
   - If air flows in both directions or not at all, replace the vacuum hose.

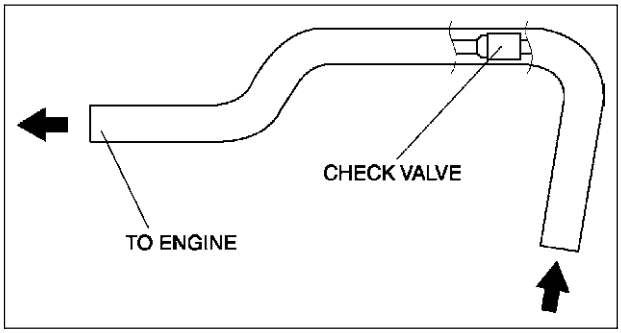

A6E6912W002

P

BRAKE PEDAL INSPECTION

A6E691243300W01

Brake Pedal Height Inspection

1. Verify that the distance from the carpet to the center of the upper surface of the pedal pad is as specified.

Pedal height (reference value)

R.H.D.	172 mm {6.77 in}
L.H.D.	187 mm {7.36 in}

Brake Pedal Height Adjustment

1. Loosen locknut B and turn the bolt A until it does not contact the pedal.
2. Loosen locknut D and turn rod C to adjust the height.
3. Tighten the bolt with locknut B .

Tightening torque
9.8—14.7 N·m
{100—149 kgf·cm, 116—130 in·lbf}

4. After adjustment, inspect the pedal play and the brake light operation.

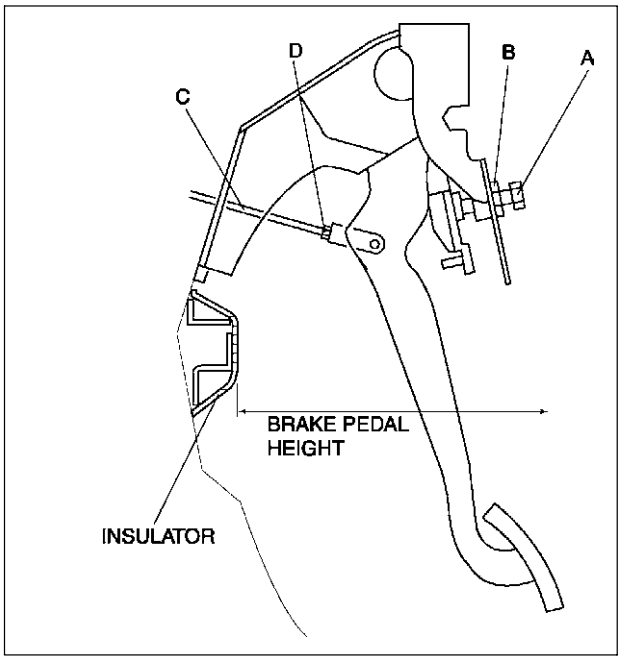

A6E6912W017

Brake Pedal Play Inspection

1. Depress the pedal a few times to eliminate the vacuum in the system.
2. Remove the spring pin, verify that the holes in the fork and in the pedal are aligned, and reinstall the pin. (See P–9 BRAKE PEDAL REMOVAL/INSTALLATION.)
3. Gently depress the pedal by hand until resistance is felt, and check the pedal play.

Pedal play
0—3 mm {0—0.1 in}

Brake Pedal Play Adjustment

1. Remove the spring pin and clevis pin. (See P–9 BRAKE PEDAL REMOVAL/INSTALLATION.)
2. Loosen locknut D and turn rod C to align the holes in the fork and in the pedal.
3. Install the clevis pin and the spring pin.
4. Tighten locknut D.

Tightening torque
15.7—21.6 N·m
{1.61—2.20 kgf·m, 11.6—15.9 ft·lbf}

5. Check the pedal height and the brake light operation.

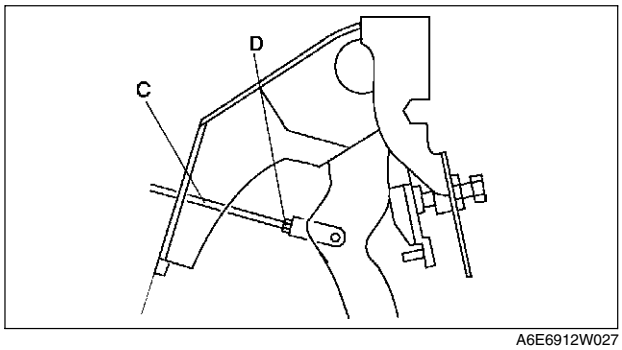

A6E6912W027

Pedal-to-floor Clearance Inspection

1. Start the engine and depress the brake pedal with a force of 588 N {60 kgf, 132 lbf}
2. Verify that the distance from the floor panel to the pedal pad center is as specified when the pedal is depressed.
   - If the distance is less than specified, check for the air in brake system.

Specification
68 mm {2.7 in} min.

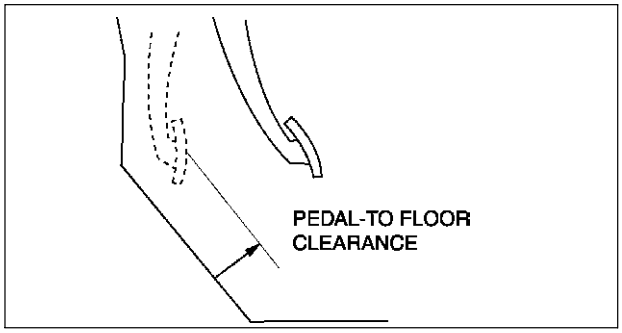

A6E6912W003

BRAKE SWITCH INSPECTION

A6E691266490W01

1. Disconnect the negative battery cable.
2. Disconnect the brake switch connector harness.
3. Inspect for continuity between the brake switch connector terminals.
   - If not as specified, replace the brake switch.

○—○ : Continuity

Condition	Terminal			
	A	B	C	D
When the brake pedal is depressed		○		○
When the brake pedal is not depressed (Vehicle with auto cruise)	○		○	

A6E6912W033

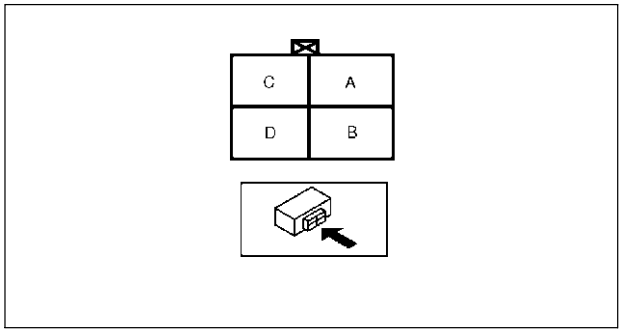

A6E6912W034

BRAKE PEDAL REMOVAL/INSTALLATION

A6E691243300W02

1. For ATX model, remove the lock unit with brake switch (R.H.D. only).
2. Remove in the order indicated in the table.

1	Brake switch connector
2	Spring pin
3	Clevis pin
4	Brake pedal
5	Brake switch (See P–9 Brake switch Installation Note)
6	Pedal pad

3. Install in the reverse order of removal.

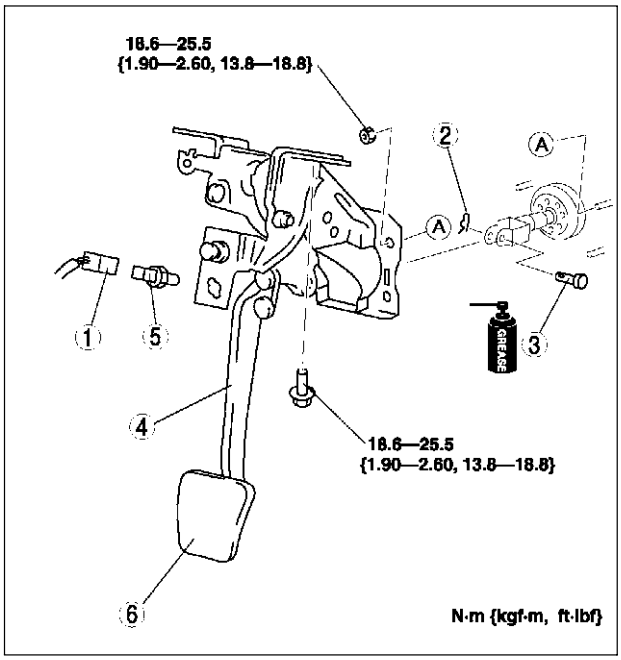

A6E6912W020

P

Brake switch Installation Note

1. Fix the brake switch on a bracket with pressing down at **50 N {5.1 kgf·m, 37 ft·lbf}**.
2. Rotate the brake switch **45°** counterclockwise.
3. Verify that the brake switch is locked securely.

Note

- Stopper bolt and pedal stopper clearance adjustment dose not need after the brake switch is locked securely.

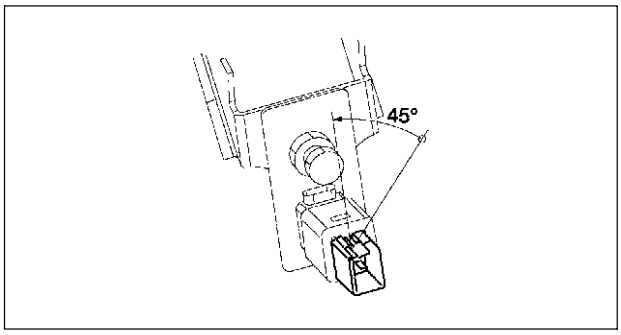

A6E6912W051

MASTER CYLINDER REMOVAL/INSTALLATION

A6E691243400W01

1. Remove in the order indicated in the table.

R.H.D.

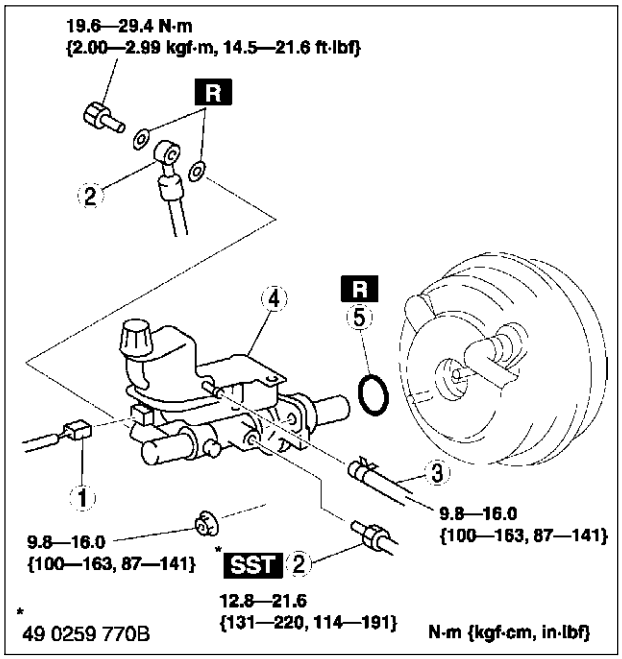

A6E6912W028

L.H.D.

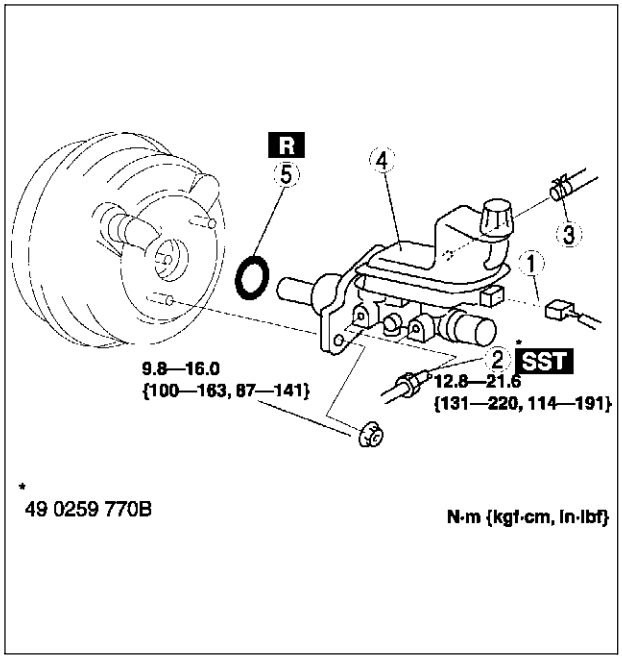

A6E6912W018

1	Brake fluid level sensor connector
2	Brake pipe
3	Hose (MTX)
4	Master cylinder (See P–11 Master Cylinder Installation Note
5	O-ring

2. Install in the reverse order of removal.

Master Cylinder Installation Note

Caution
- **Always install the gasket of the power brake unit push rod before performing measurement inspections or adjustments.**

1. Install the **SST** to the power brake unit as shown, and tighten within the specified torque.

   Tightening torque
   9.8—16.0 N·m {100—163 kgf·cm, 87—141 in·lbf}

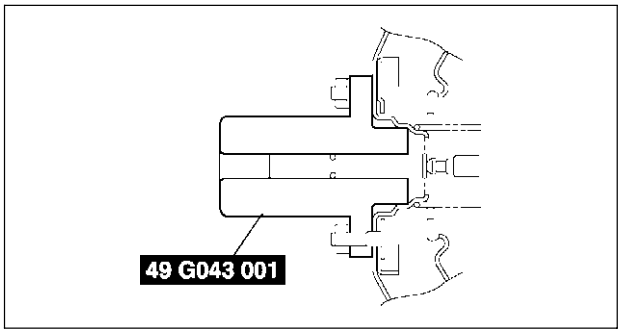

A6E6912W042

2. Using a vacuum gauge, create a vacuum pressure of **66.7 kPa {500 mmHg, 19.7 inHg}** in the power brake unit.
3. Using calipers, measure dimension L as shown.

   Specification
   22.7 mm{8.94 in}

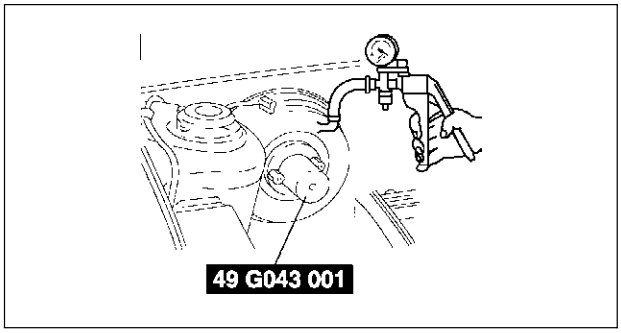

A6E6912W029

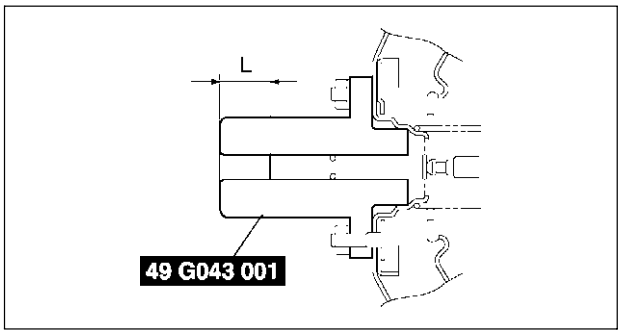

A6E6912W030

4. If dimension L is not within the specification as shown, remove **SST** (49 E043 001) and use **SST** (49 B043 004) to adjust the length of the push rod while using **SST** (E043 003A) to keep the push rod from rotating.
5. Remove the **SSTs**, replace **SST** (49 E043 001) and measure dimension L again.

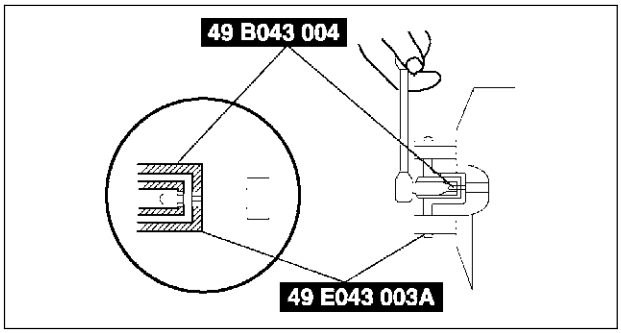

A6E6912W031

P

6. Install the master cylinder to the power brake unit.

Caution

- **If after installing the master cylinder, air does not bleed properly from the brake lines even after performing air bleeding, brake drag occurs or other characteristics are present, it is possible that the master cylinder piston is jammed against the power brake unit. If air cannot be bled properly, brake drag exists or other malfunctions occur, remove the master cylinder and reinstall properly.**

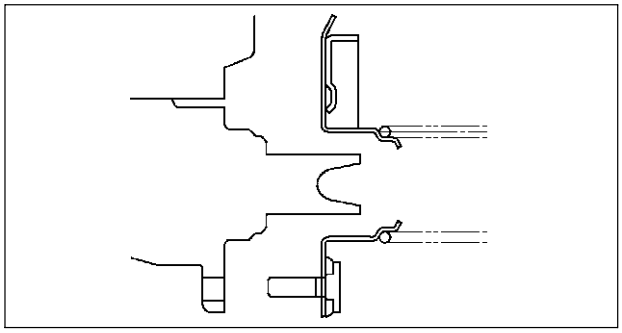

A6E6912W032

FLUID LEVEL SENSOR INSPECTION

A6E691243540W01

1. Disconnect the negative battery cable.
2. Disconnect the sensor connector.
3. Inspect for continuity between terminals of fluid level sensor.
   - If not as specified, replace the fluid level sensor.

O—O : Continuity

Fluid level	A	B
Above MIN		
Below MIN	O	O

A6E6912W024

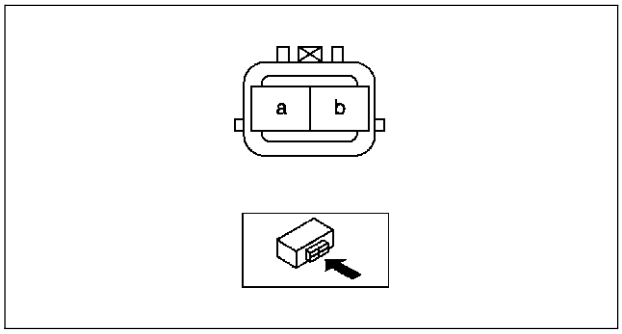

A6E6912W023

MASTER CYLINDER DISASSEMBLY/ASSEMBLY

A6E691243400W02

Caution

- **If the master cylinder body is damaged, replace the unit as a component. When securing the master cylinder in a vise, tighten only the flange of the master cylinder.**

1. Disassemble in the order indicated in the table.
2. Assemble in the reverse order of disassembly.

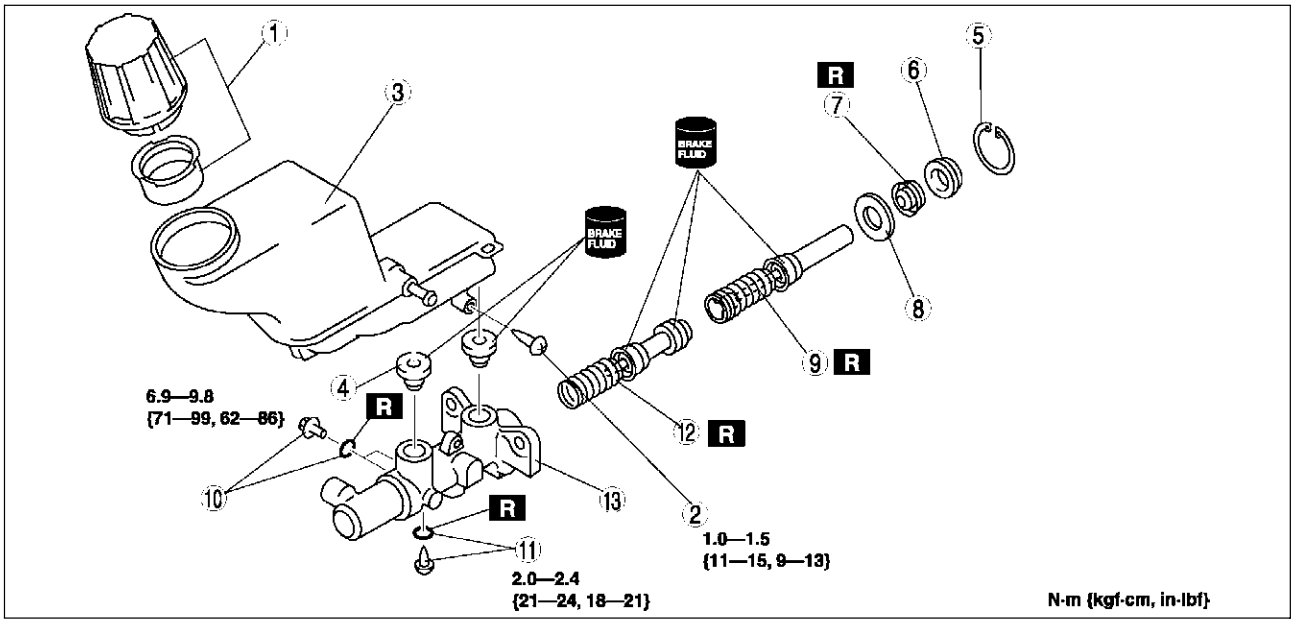

A6E6912W019

1	Cap set	2	Screw

3	Reservoir
4	Joint bushing
5	Snap ring
6	Piston guide
7	Cup
8	Stopper
9	Primary piston

10	Stop pin and O-ring (with ABS) (See P–13 Stop Pin and O-ring (with ABS) Assembly Note)
11	Stop screw and O-ring (without ABS) (SeeP–13 Stop Screw and O-ring (without ABS) Assembly Note)
12	Secondary piston
13	Master cylinder body

Stop Screw and O-ring (without ABS) Assembly Note

1. Install the secondary piston and primary piston.
2. Install the new O-ring onto the stop screw.
3. Push the primary piston assembly in full.
4. Install and tighten the stop screw.

   Tightening torque
   2.0—2.4 N·m {21—24 kgf·cm, 18—21 in·lbf}

5. Push and release the secondary piston component to verify that it is held properly by the stop screw.

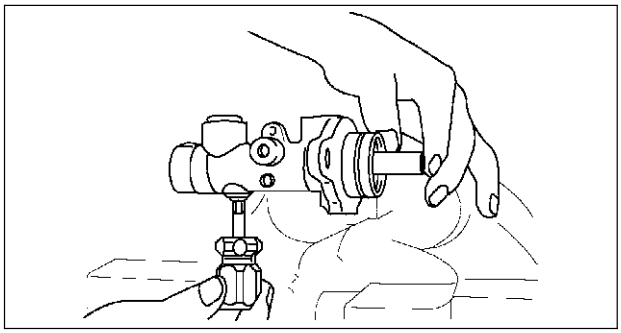

A6E6912W025

Stop Pin and O-ring (with ABS) Assembly Note

1. Install the secondary piston with the piston hole facing the stop pin and primary piston.
2. Install the new O-ring onto the stop pin.
3. Push the primary piston assembly in full.
4. Install and tighten the stop pin.

   Tightening torque
   6.9—9.8 N·m {71—99 kgf·cm, 62—86 in·lbf}

5. Push and release the secondary piston component to verify that it is held properly by the stop pin.

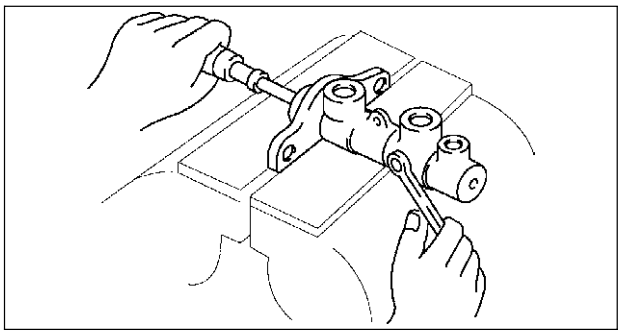

A6E6912W043

P

POWER BRAKE UNIT REMOVAL/INSTALLATION

A6E691243800W02

1. Remove the master cylinder. (See P–10 MASTER CYLINDER REMOVAL/INSTALLATION.)
2. Remove the wiper arm. (See T–57 WINDSHIELD WIPER ARM AND BLADE REMOVAL/INSTALLATION.)
3. Remove the cowl grille. (See S–50 COWL GRILLE REMOVAL/INSTALLATION.)
4. Remove the wiper motor. (See T–56 WINDSHIELD WIPER MOTOR REMOVAL/INSTALLATION.)
5. Remove the cowl panel. (See S–119 COWL PANEL REMOVAL/INSTALLATION.)
6. For L.H.D., remove the A/C bracket.
7. For L.H.D., remove the ABS/TCS HU/CM or DSC HU/CM . (See P–28 ABS (ABS/TCS) HU/CM REMOVAL/INSTALLATION.) (See P–38 DSC HU/CM REMOVAL/INSTALLATION.
8. For R.H.D., remove the alternator cover.
9. For R.H.D., remove the insulator.
10. For R.H.D., remove the vacuum pipe bracket.
11. Remove in the order indicated in the table.

1	Vacuum hose
2	Snap pin
3	Clevis pin
4	Nut
5	Fork
6	Power brake unit
7	Gasket
8	Nut

12. Install in the reverse order of removal.

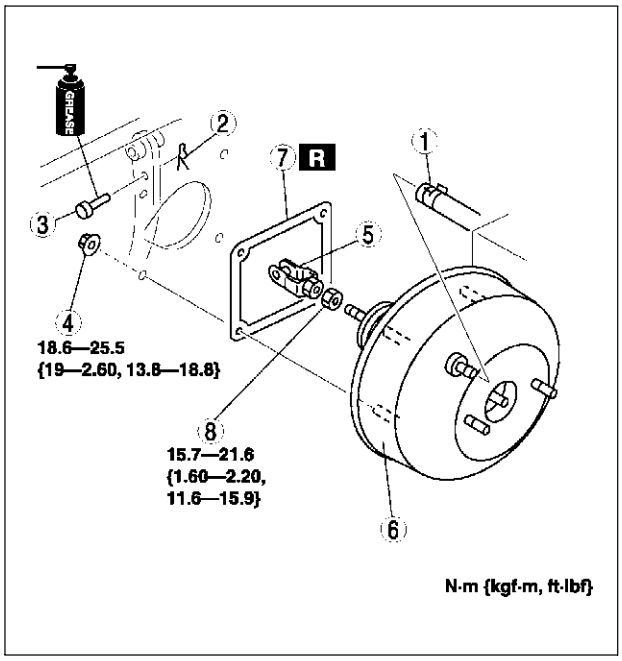

A6E6912W044

POWER BRAKE UNIT INSPECTION

A6E691243800W01

Warning

- **The following inspection methods are the simple inspection methods to judge the function of power brake.**
- **If there is malfunction in power brake unit, replace the power brake unit as a component.**

Power Brake Unit Function Check (Simple Method)

Step 1

1. With the engine stopped, depress the pedal a few times.
2. With the pedal depressed, start the engine.
3. If the pedal moves down slightly immediately after the engine starts, the unit is operating.

Step 2

1. Start the engine.
2. Stop the engine after it has run for **1 or 2 minutes**.
3. Depress the pedal with the usual force.
4. If the first pedal stroke is long and becomes shorter with subsequent strokes, the unit is operating.
   - If a problem is found, inspect for damage of the vacuum hose, and vacuum tank. Repair if necessary, and inspect it again.

Step 3

1. Start the engine.
2. Depress the pedal with usual force.
3. If the pedal height does not change, the unit is operating.
4. Hold the pedal down for **about 30 seconds**.
5. If the pedal height does not change, the unit is operating.

Power Brake Unit Function Check (Inspection Using The Testers)

1. Connect the **SSTs**, vacuum gauge, and pedal depression force gauge as shown in the figure to bleed the air from **SSTs** and brake line. (Bleed the air from **SSTs** using a air bleed valve A.)

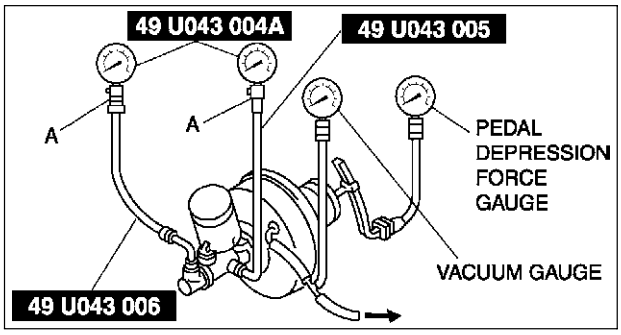

A6E6912W005

Checking for vacuum loss (unloaded condition)

1. Stop the engine when the vacuum gauge reading reaches **66.7 kPa {500 mmHg, 19.7 inHg}**.
2. Observe the vacuum gauge for **15 seconds**.
   - If the gauge shows **63.3—66.7 kPa {475—500 mmHg, 18.7—19.6 inHg}**, the unit is operating.
   - If not, inspect for damage on the check valve or vacuum hose, and examine the installation. Repair as necessary, and inspect it again.

Checking for vacuum loss (loaded condition)

1. Start the engine.
2. Depress the brake pedal with a force of **196 N {20 kgf, 44 lbf}**.
3. Stop the engine when the vacuum gauge reading reaches **66.7 kPa {500 mmHg, 19.7 inHg}**.
4. Observe the vacuum gauge for **15 seconds**.
5. If the gauge shows **63.3—66.7 kPa {475—500 mmHg, 18.7—19.6 inHg}**, the unit is operating.

P

Checking for hydraulic pressure

1. When the engine is stopped (vacuum **0 kPa {0 mmHg, 0 inHg}**) and the fluid pressure is within the specification, the unit is operating.

Pedal force	Fluid pressure
200 N {20 kgf, 44 lbf}	588 kPa {5.95 kgf/cm^2, 84.7 psi} min.

2. Start the engine. Depress the brake pedal when the vacuum reaches **66.7 kPa {500 mmHg, 19.7 inHg}**.
   - If the fluid pressure is within the specification, the unit is operating.
   - If the fluid pressure is not as specified, inspect for damage to the check valve or vacuum hose, and fluid leakage of the hydraulic line. Repair as necessary, and inspect again.

Pedal force	Fluid pressure
200 N {20 kgf, 44 lbf}	8,787 kPa {89.60 kgf/cm^2, 1,274 psi} min.

DUAL PROPORTIONING VALVE INSPECTION (WITHOUT ABS)

A6E691243900W01

1. Connect the **SSTs** to the brake pipes as shown in the figure.
2. Bleed the air from the brake system.
3. Measure the fluid pressure of the master cylinder and the rear brake.
   - If not within the specification, replace the dual proportioning valve.

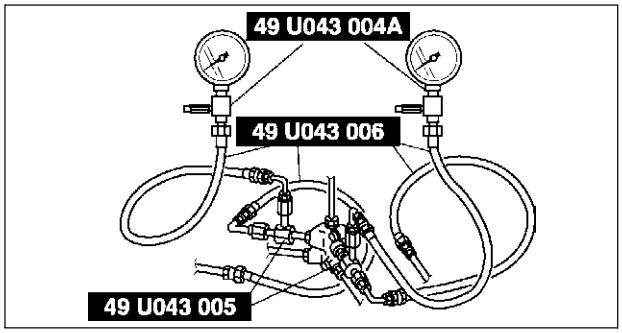

A6E6912W006

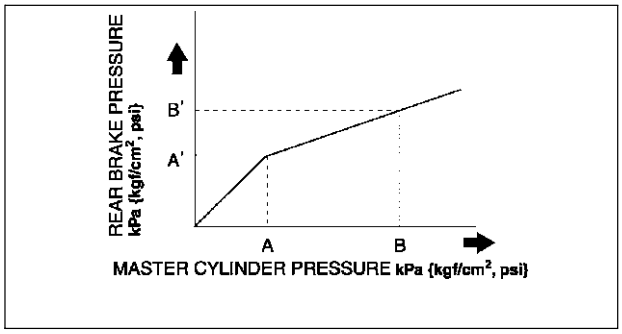

A6E6912W007

Fluid pressure

kPa {kgf/cm^2, psi}

A	A'	B	B'
2,450 {25, 355}	2,450 {25, 355} ± 200 {2, 29}	5,880 {60, 853}	3,480 {35.5, 505} ± 300 {3, 44}

DUAL PROPORTIONING VALVE REPLACEMENT (WITHOUT ABS)

A6E691243900W02

1. Remove in the order indicated in the table.

1	Brake pipe
2	Bolt
3	Dual proportioning valve (See P–17 Dual Proportioning Valve Installation Note)

2. Install in the reverse order of removal.

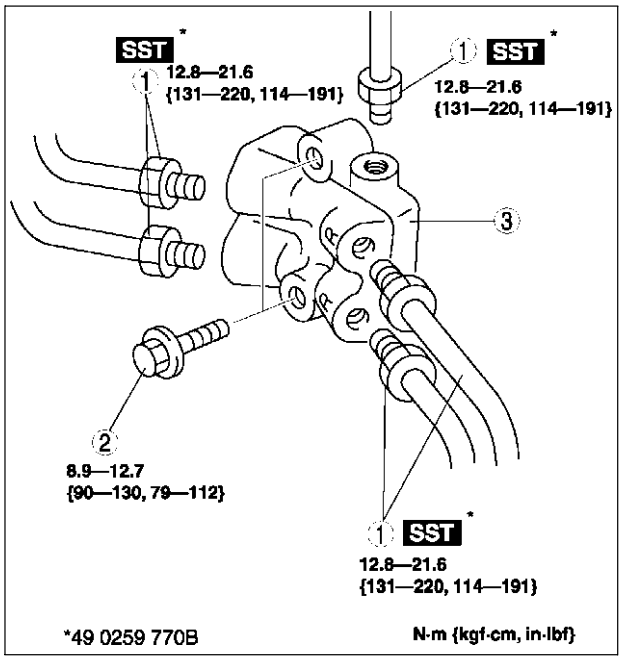

A6E6912W035

Dual Proportioning Valve Installation Note

1. Install the dual proportioning valve so that the R mark faces the left side of the vehicle.

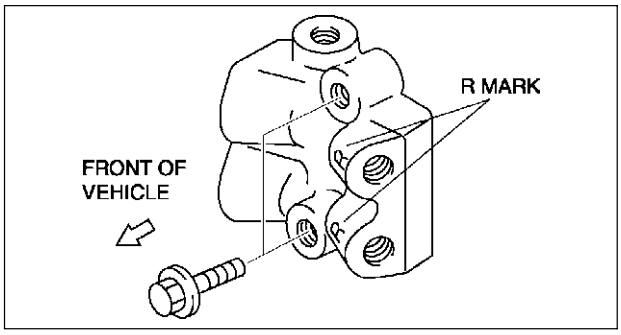

A6E6912W045

FRONT BRAKE (DISC) INSPECTION

A6E691233980W01

Brake Judder Repair Hint

Description

1. Brake judder concern has the following 3 characteristics:

Steering wheel vibration

1. Steering wheel vibrates in the direction of its rotation. This characteristic is most noticeable when applying brakes at a vehicle speed of **100—140 km/h {62.1—86.8 mph}**.

Floor vibration

1. When applying brakes, the vehicle body shakes back and forth. The seriousness of shake is not influenced by vehicle speed.

P

Brake pedal vibration

1. When applying brakes, a pulsating force tries to push the brake pad back occurs. The pulsation is transmitted to the brake pedal.
2. The following are the main possible causes of brake judder:

Due to an excessive runout (side-to-side wobble) of disc plate, the thickness of disc plate is uneven.

1. If the runout is **more than 0.05 mm {0.002 in} to 10 mm {0.39 in}** from the disc plate edge, an uneven wear occurs on the disc plate because the pad contacts the plate unevenly.
2. If the runout is **less than 0.05 mm {0.002 in}**, uneven wear does not occur.

The disc plate is deformed by heat.

1. Repeated panic braking may raise the temperature in some portions of disc plate by **approximately 1,000 °C {1,832 °F}**. This results in deformed disc plate.

Due to corrosion, the thickness and friction coefficient of disc plate change.

1. If a vehicle is parked under damp conditions for a long time, corrosion occurs on the friction surface of disc plate.
2. The thickness of corrosion is uneven and sometimes appears like a wave pattern, which changes the friction coefficient and causes a reaction force.

Inspection and repair procedure

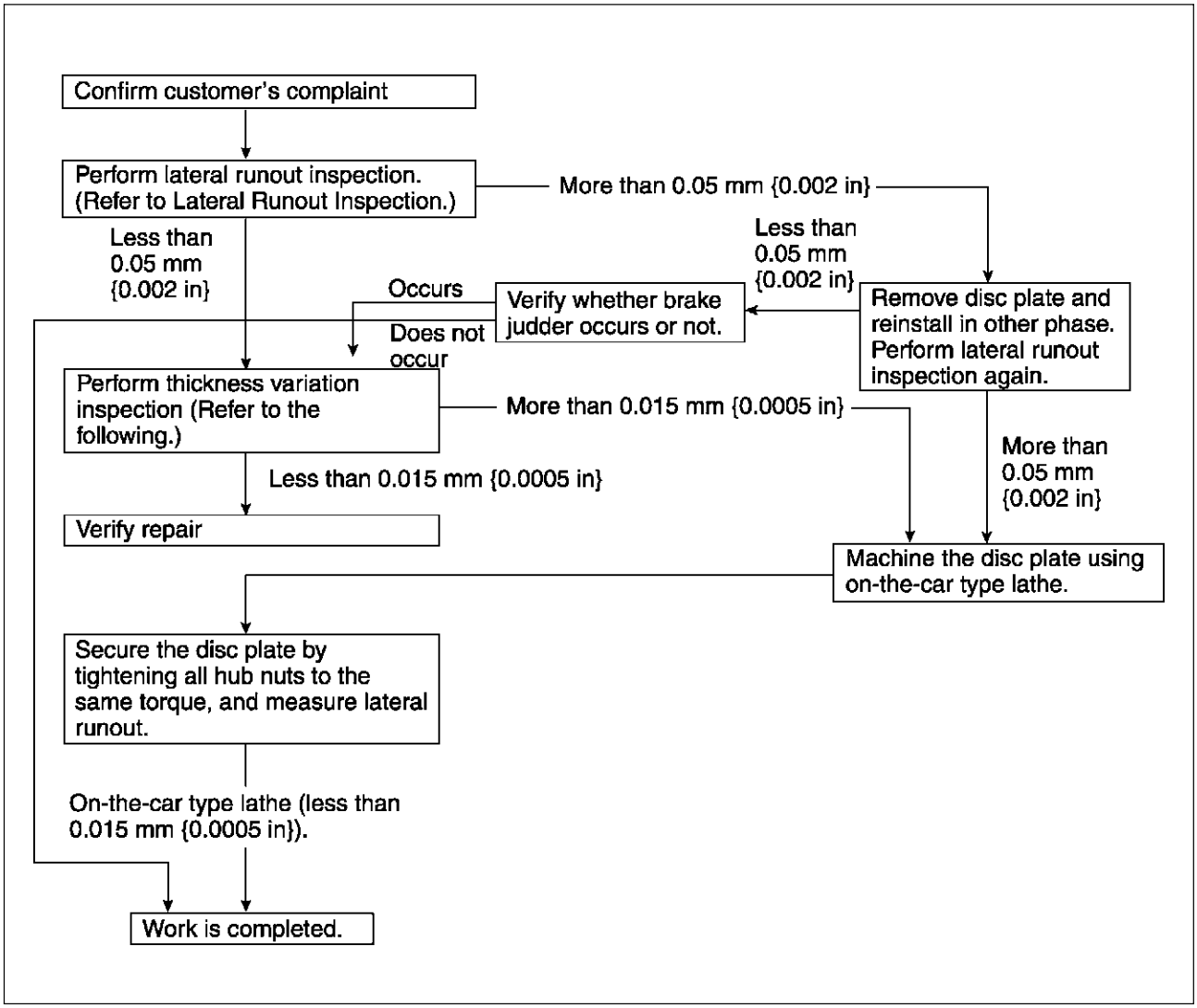

A6E6912W008

Lateral runout inspection

1. To secure the disc plate and the hub, tighten the hub nuts upside down or insert a washer (thickness **10 mm {0.39 in}**, inner diameter **more than 12 mm {0.47 in}**) between the hub bolt and the hub nut.

   Note
   - The component parts of the **SST** (49 B017 001 or 49 G019 003) can be used as a suitable washer.

2. After tightening all the hub nuts to the same torque, put the dial gauge on the friction surface of disc plate **10 mm {0.39 in}** from the disc plate edge.
3. Rotate the disc plate one time and measure the runout.

   Runout limit
   0.05 mm {0.002 in}

Thickness variation inspection

1. Clean the disc plate-to-pad friction surface using a brake cleaner.
2. Measure the points indicated in the illustration using a caliper (micrometer).
3. Subtract the minimum value from the maximum, and if the result is not within specification, machine the disc plate using a lathe.

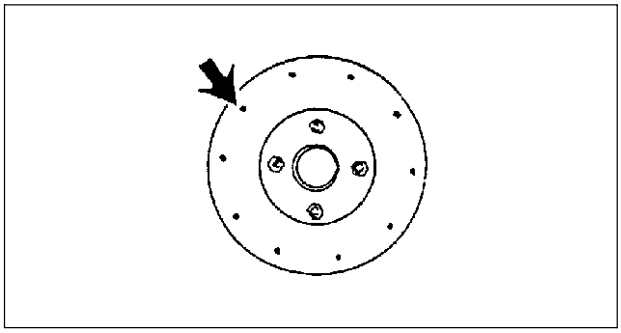

X3U411WAR

Thickness variation limit
0.015 mm {0.00059 in}

Warning
- **Do not exceed minimum disc plate thickness.**

Disc Plate Thickness Inspection

Caution
- **Excessive runout may result if the disc plate is removed from the vehicle then machined. Machine the disc plate while installed on the vehicle.**

1. Measure the thickness of the disc plate.
   - If the thickness is not within the specification, replace the disc plate.

Minimum
22 mm {0.87 in}
Minimum thickness after machining using a brake lathe on-vehicle
22.8 mm {0.90 in}

Disc Pad Thickness Inspection

1. Jack up the front of the vehicle and support it with safety stands.
2. Remove the wheel and tires.
3. Verify the remaining thickness of the pads.

Minimum thickness
2.0 mm {0.079 in} min.

4. Replace the pads as a set: right and left wheels, if either one is at or less than the minimum thickness.

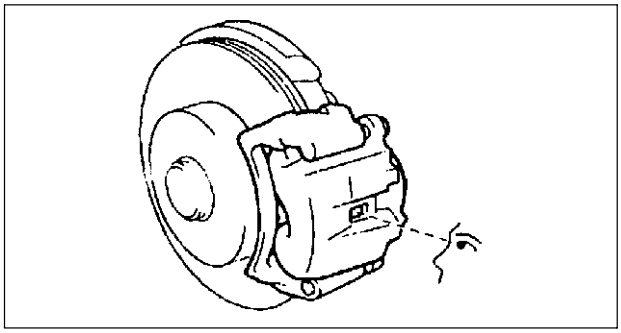

X3U411WAS

P

FRONT BRAKE (DISC) REMOVAL/INSTALLATION

A6E691233980W02

1. Remove in the order indicated in the table.
2. Install in the reverse order of removal.
3. After installation, depress the pedal a few times, rotate the wheel by hand, and verify that the brake does not drag.

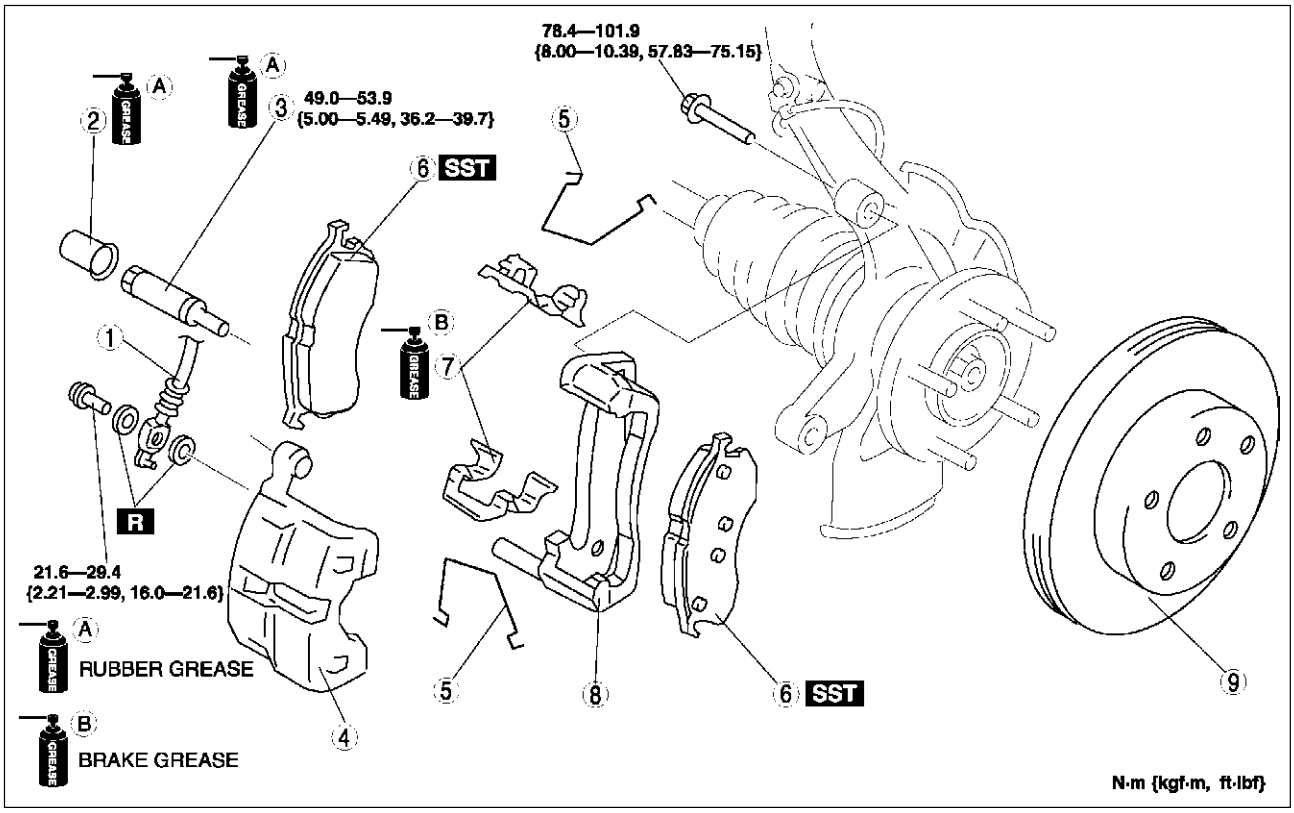

A6E6912W021

1	Flexible hose
2	Cap
3	Guide pin
4	Caliper
5	M-spring

6	Disc pad (See P–21 Disc Pad Installation Note)
7	Guide plate
8	Mounting support
9	Disc plate (See P–20 Disc Plate Removal Note) (See P–20 Disc Plate Installation Note)

Disc Plate Removal Note

1. Mark the wheel hub bolt and disc plate before removal for reference during installation.

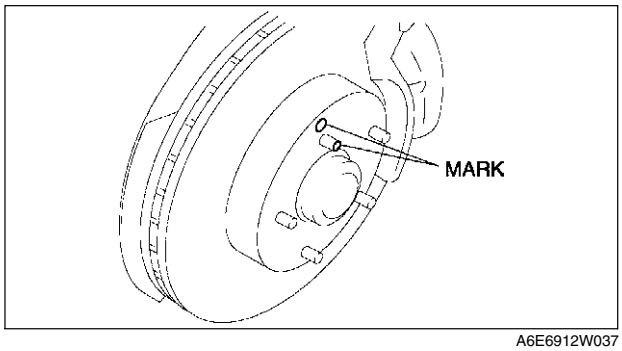

A6E6912W037

Disc Plate Installation Note

1. Remove any rust or grime on the contact face of the disc plate and wheel hub.
2. Install the disc plate and align the marks made before removal.

Disc Pad Installation Note

1. Push the piston fully inward using the **SST**.
2. Install the disc pad.

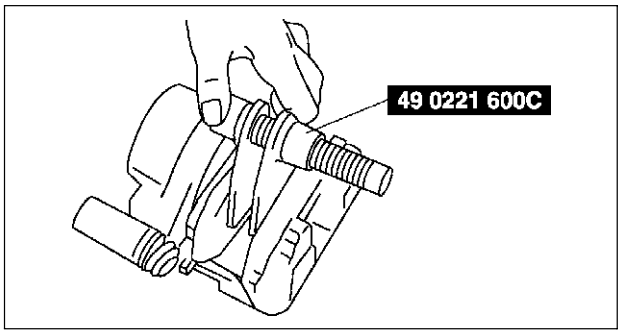

A6E6912W038

DISC PAD (FRONT) REPLACEMENT

A6E691233630W01

1. Remove in the order indicated in the table.
2. Install in the reverse order of removal.

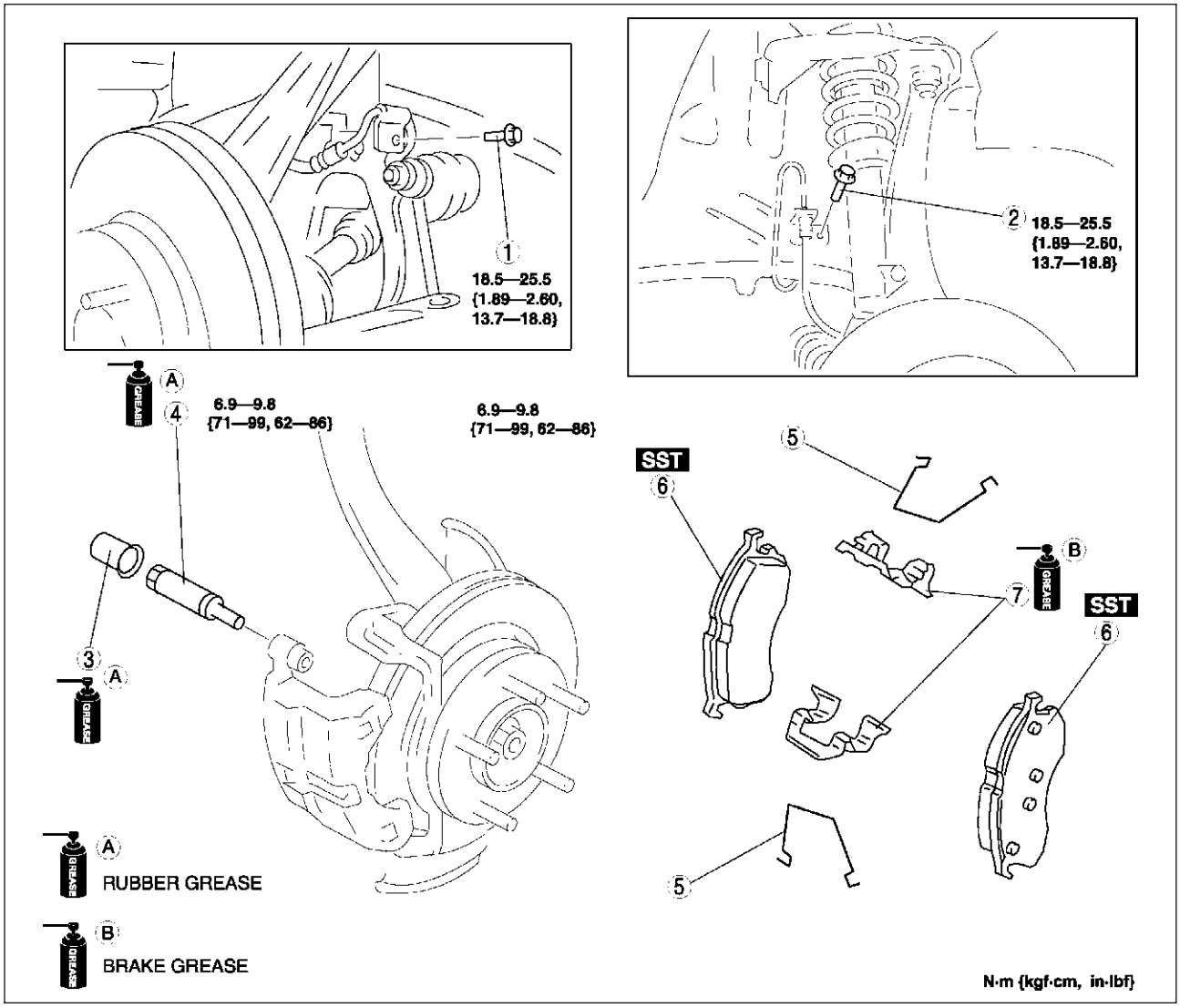

A6E6912W022

1	Bolt
2	Bolt
3	Cap
4	Guide pin

5	M-spring
6	Disc pad (See P–21 Disc Pad Installation Note)
7	Guide plate

CALIPER (FRONT) DISASSEMBLY/ASSEMBLY

A6E691233990W01

1. Disassemble in the order indicated in the table.

1	Dust seal
2	Piston (See P–22 Piston Disassembly Note)
3	Piston seal (See P–22 Piston Seal Disassembly Note)
4	Bleeder cap
5	Bleeder screw (See P–23 Bleeder Screw Assembly Note)
6	Caliper body
7	Boot

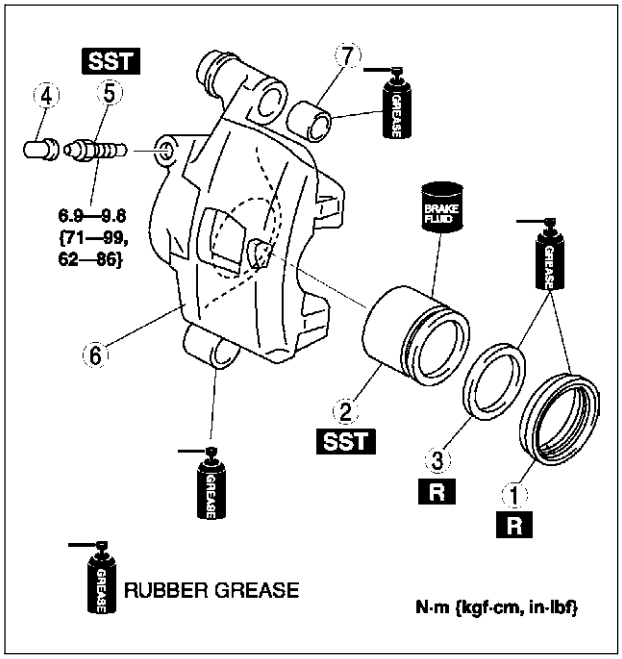

A6E6912W046

2. Assemble in the reverse order of removal.

Piston Disassembly Note

Caution

- **Blow the compressed air slowly to prevent the piston from suddenly popping out.**

1. Place a piece of wood in the caliper, then blow compressed air through the hole to force the piston out of the caliper.

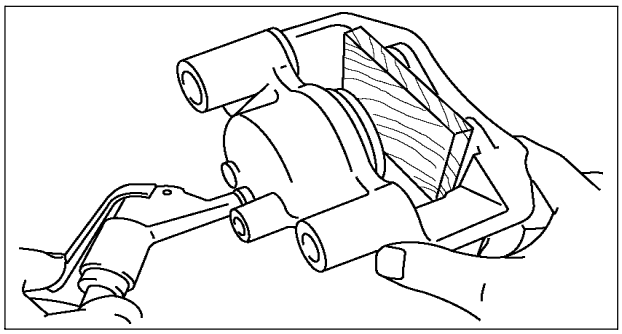

A6E6912W047

Piston Seal Disassembly Note

1. Remove the piston seal from the brake caliper using the **SST**.

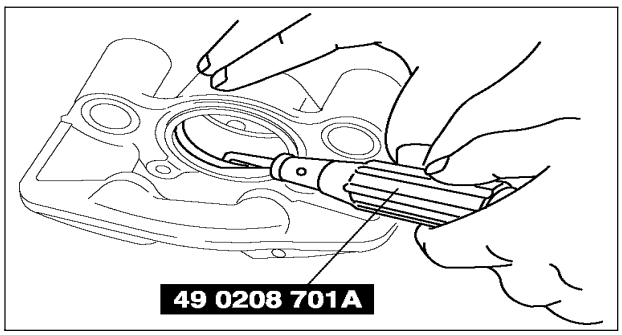

A6E6912W048

Bleeder Screw Assembly Note

1. Assemble the bleeder screw to the caliper using the SST.

   Tightening torque
   6.9—9.8 N·m {71—99 kgf·cm, 62—86 in·lbf}

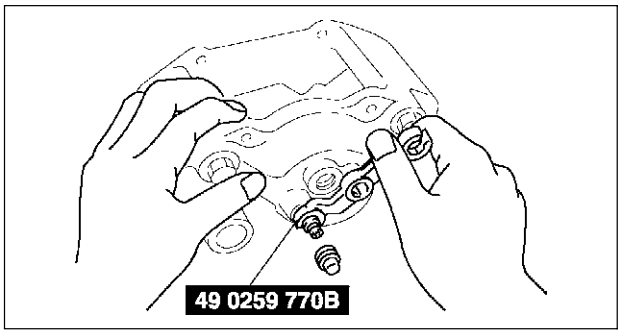

A6E6912W049

REAR BRAKE (DISC) INSPECTION

A6E691226980W01

Brake Judder Repair Hint

1. (See P–17 FRONT BRAKE (DISC) INSPECTION.)

Disc Plate Thickness Inspection

Caution
- **Excessive runout may result if the disc plate is removed from the vehicle then machined. Machine the disc plate while installed on the vehicle.**

1. Measure the thickness of the disc plate.
   - If the thickness is not within the specification, replace the disc plate.

Minimum
8 mm {0.31 in}
Minimum thickness after machining using a brake lathe on-vehicle
8.8 mm {0.35 in}

Disc Pad Thickness Inspection

1. Jack up the front of the vehicle and support it with safety stands.
2. Remove the wheel and tires.
3. Verify the remaining thickness of the pads.

   Minimum thickness
   2.0 mm {0.079 in} min.

4. Replace the pads as a set: right and left wheels, if either one is at or less than the minimum thickness.

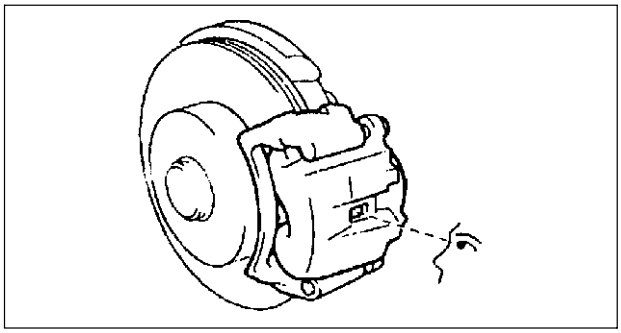

X3U411WAS

P

REAR BRAKE (DISC) REMOVAL/INSTALLATION

A6E691226980W02

1. Remove in the order indicated in the table.
2. Install in the reverse order of removal.
3. After installation, depress the pedal several times, rotate the wheel by hand, and verify that the brake does not drag.

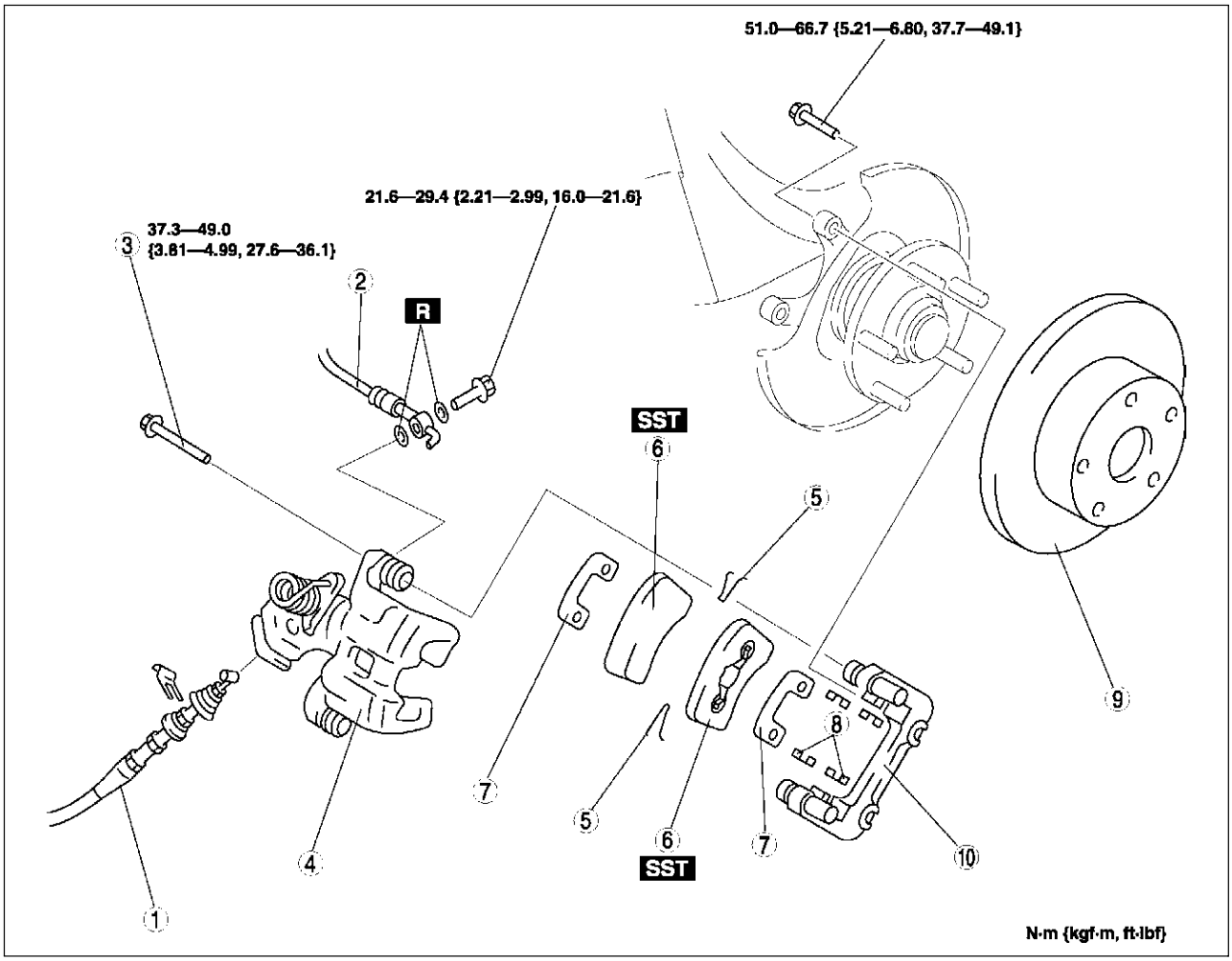

A6E6912W026

1	Parking brake cable, clip
2	Flexible hose
3	Bolt
4	Caliper
5	Spring
6	Disc pad (See P–25 Disc Pad Installation Note)

7	Shim
8	Guide plate
9	Disc plate (See P–20 Disc Plate Removal Note) (See P–20 Disc Plate Installation Note)
10	Mounting support

Disc Pad Installation Note

1. Turn the manual adjustment gear counterclockwise with an Allen wrench to pull the brake caliper piston inward. (Turn until it stops.)
2. Install the disc pads.
3. Turn the manual adjustment gear clockwise until the brake pads just touch the disc plate. Turn the manual adjustment gear back 1/3-turn.

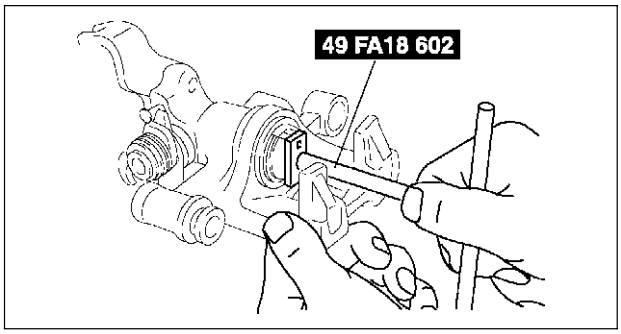

A6E6912W039

DISC PAD (REAR) REPLACEMENT

A6E691226630W01

1. Remove in the order indicated in the table.
2. Install in the reverse order of removal.

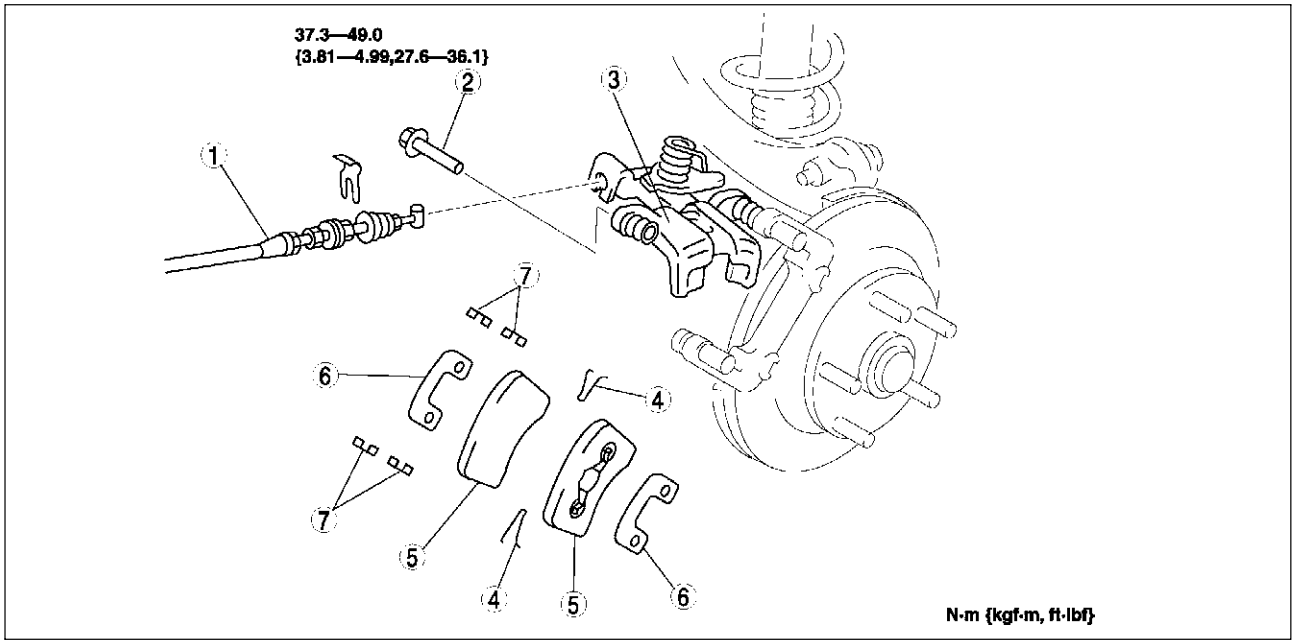

Z3U0411W009

1	Parking brake cable, clip
2	Screw plug
3	Lock bolt

4	Disc pad (See P–25 Disc Pad Installation Note)
5	Shim
6	Guide plate

P

PARKING BRAKE SYSTEM

PARKING BRAKE (LEVER TYPE) INSPECTION

A6E691444000W01

1. Pull the parking brake lever a few times.
2. Depress the brake pedal a few times.
3. Inspect the parking brake stroke by pulling the parking brake lever with a force of **98 N {10 kgf, 22 lbf}**.

Stroke
3—6 notches

PARKING BRAKE (LEVER TYPE) ADJUSTMENT

A6E691444000W02

1. Start the engine and depress the brake pedal several times.
2. Stop the engine.
3. Remove the ashtray behind the center console.
4. Turn the adjusting nut as shown in the figure.
5. After adjustment, inspect the following points:
   (1) Turn the ignition switch to ON, pull the parking brake lever one notch, and verify that the parking brake warning light illuminates.
   (2) Verify that the rear brakes do not drag.

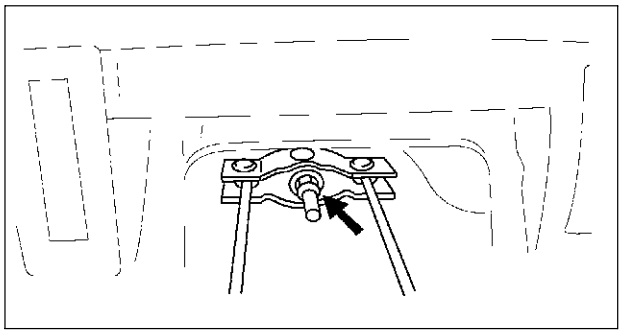

A6E6914W002

PARKING BRAKE (LEVER TYPE) REMOVAL/INSTALLATION

A6E691444000W03

1. Remove the center console. (See S–86 CONSOLE REMOVAL/INSTALLATION.)
2. Remove the rear seat cushion (4SD) or rear seat (5HB) . (See S–110 REAR SEAT REMOVAL/INSTALLATION.)
3. Remove the exhaust pipe bracket.
4. Remove in the order indicated in the table.
5. Install in the reverse order of removal.
6. Adjust the parking brake stroke. (See P–26 PARKING BRAKE (LEVER TYPE) ADJUSTMENT.)

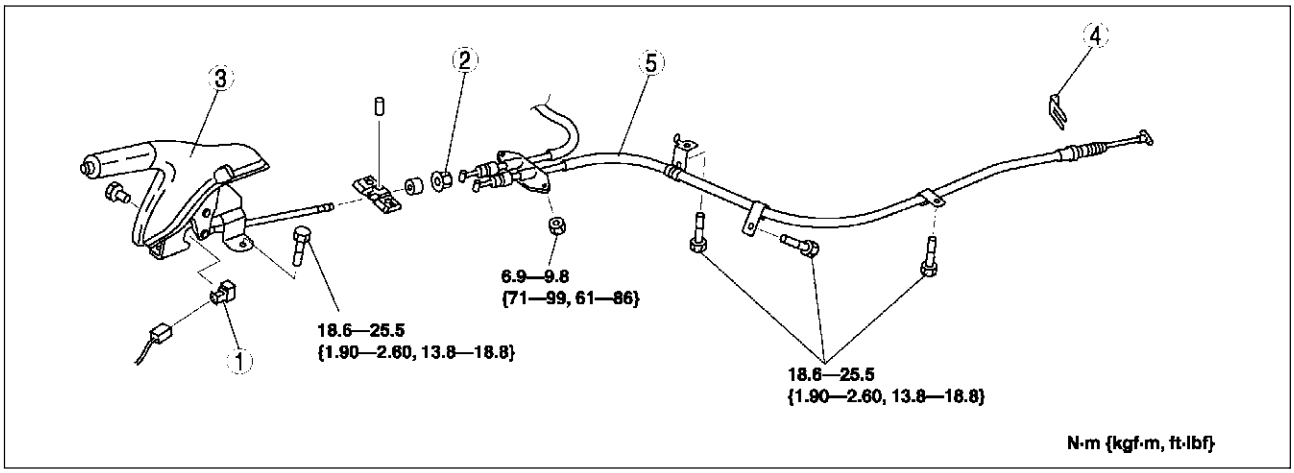

A6E6914W001

1	Parking brake switch
2	Adjusting nut
3	Parking brake lever

4	Clip
5	Parking brake cable

ABS/TCS

ABS (ABS/TCS) HU/CM SYSTEM INSPECTION

A6E692143780W01

System Inspection

Preparation

1. Verify that the battery is fully charged. With the ignition switch on, verify that the ABS and BRAKE system warning lights goes out after **2.4 seconds**.
2. If the lights stays on after **2.4 seconds**, the ABS (ABS/TCS) HU/CM detects a failure. Follow the troubleshooting procedures.
3. Turn the ignition switch off.
4. On level ground, jack up the vehicle and support it evenly on safety stands. Shift the transaxle to N position.
5. Release the parking brake.
6. Rotate the wheels by hand, and inspect for brake drag.

Operation of ABS inspection

1. Perform the “Preparation.”
2. Connect the **SSTs** (WDS or equivalent) to the data link connector-2 (DLC-2).
3. Set up an active command mode inspection according to the combination of commands below.

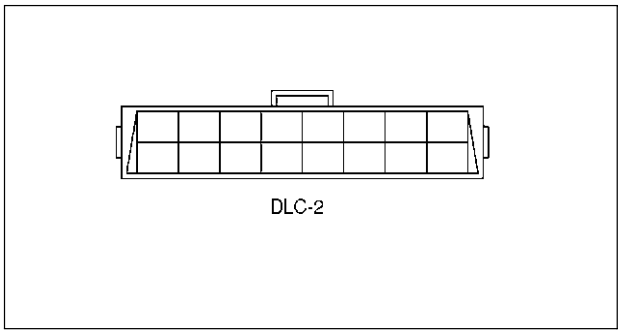

A6E6921W007

OPERATION	COMMAND NAME				COMMAND TYPE
	PMP_MOTOR	RF_OUTLET	RF_INLET	ABS_POWER	
Pressure retention	OFF	OFF	ON	ON	Manual
Pressure reduction	ON	ON	ON	ON	

The chart above shows an example of a right wheel inspection.

Note

- When working with two people, one should press on the brake pedal, the other should attempt to rotate the wheel being inspected.

4. Send the command while pressing on the brake pedal and attempting to rotate the wheel being inspected.
5. When pressure is being maintained, and click sound indicating the solenoid is operating comes from the ABS (ABS/TCS) HU/CM, confirm that the wheel does not rotate. When pressure is being reduced, and click sound indicating the solenoid is operating comes from the ABS (ABS/TCS) HU/CM, confirm that the wheel rotates, even though the brake pedal is being depressed.

Note

- To protect the ABS (ABS/TCS) HU/CM, the solenoid valve used for simulations and the ABS motor stay on for **10 seconds** each time they are switched on.
- Performing the inspections above determines the following.
  - — The ABS (ABS/TCS) HU/CM brake lines are normal.
  - — The ABS (ABS/TCS) HU/CM hydraulic system is not significantly abnormal.
  - — The ABS (ABS/TCS) HU/CM wiring is normal.
- However, the following items cannot be checked.
  - — ABS (ABS/TCS) HU/CM input system harness and parts
  - — Extremely small leaks in the ABS (ABS/TCS) HU/CM internal hydraulic system
  - — Unusual intermittent occurrences in the above items

ABS (ABS/TCS) HU/CM REMOVAL/INSTALLATION

A6E692143700W01

Caution

- **When replacing the ABS (ABS/TCS) HU/CM, configuration procedure must be done before removing the ABS (ABS/TCS) HU/CM. If configuration is not completed before removing the ABS (ABS/TCS) HU/CM, TCS will not work properly (with TCS model).**
- **Do not drop the ABS (ABS/TCS) HU/CM. Replace it if it is subjected to an impact.**

1. Configurate the ABS (ABS/TCS) HU/CM (when only replacing it). (See P–29 ABS (ABS/TCS) or DSC HU/CM CONFIGURATION.)
2. Remove the battery, battery tray and battery tray bracket. (See G–3 BATTERY REMOVAL/INSTALLATION.)
3. Remove the under cover.
4. Remove in the order indicated in the table.
5. Install in the reverse order of removal.

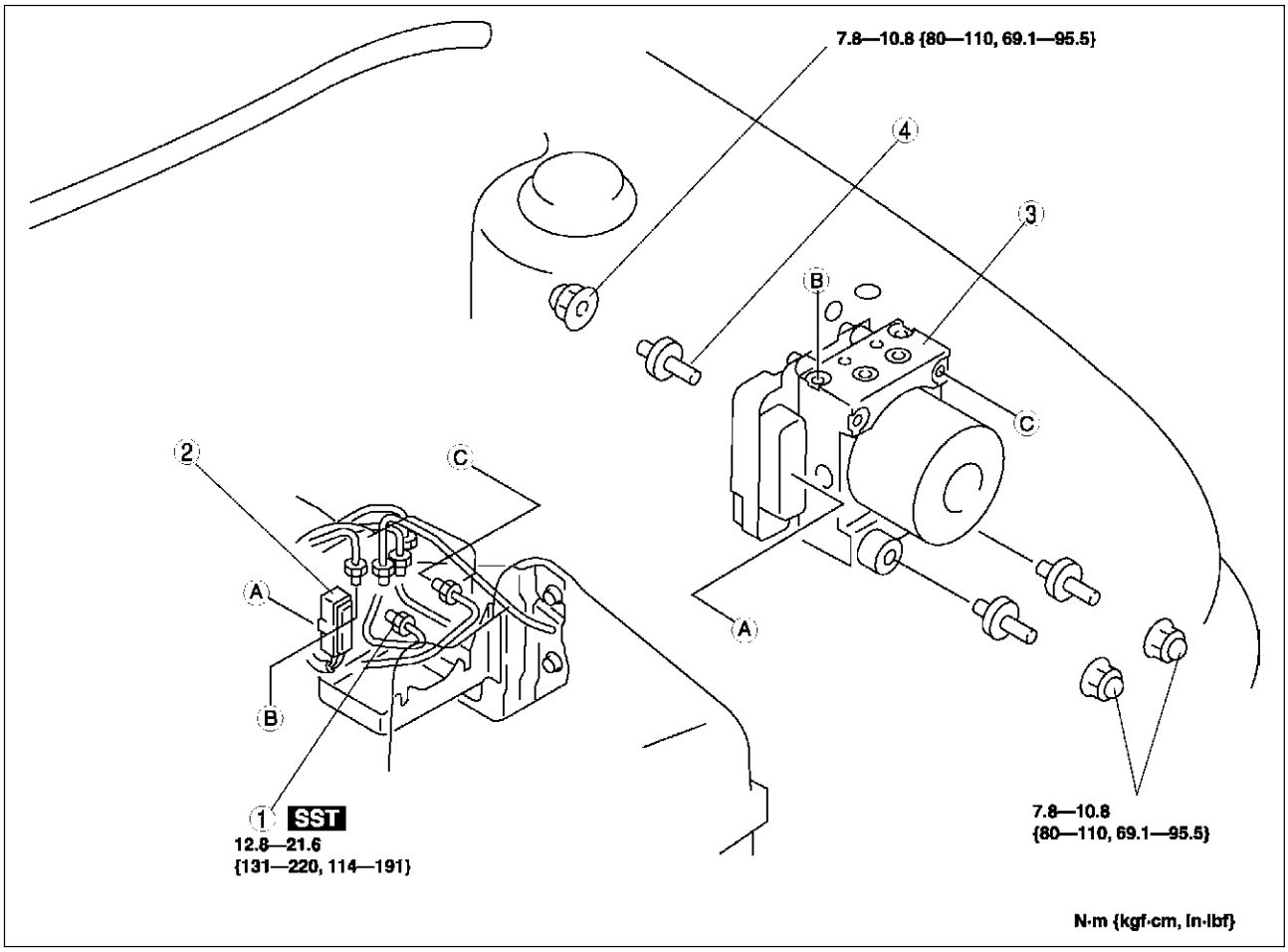

A6E6921W002

1	Brake pipe
2	Connector (See P–29 Connector Removal Note) (See P–29 Connector Installation Note

3	ABS HU/CM (See P–29 ABS HU/CM Removal/Installation Note)
4	Stud

Connector Removal Note

1. Pull the lock lever up and make it unlock.
2. Remove the connector.

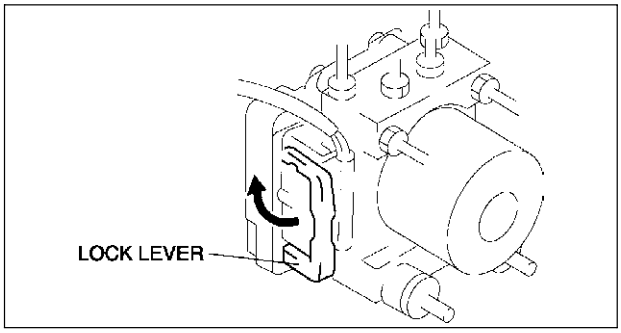

A6E6916W006

ABS HU/CM Removal/Installation Note

1. When removing/installing the ABS HU/CM from/to the vehicle, attach a strip of protective tape on the ABS HU/CM connector to prevent brake fluid from entering.

Connector Installation Note

1. Verify that the lock lever of the harness connector is completely pulled up.

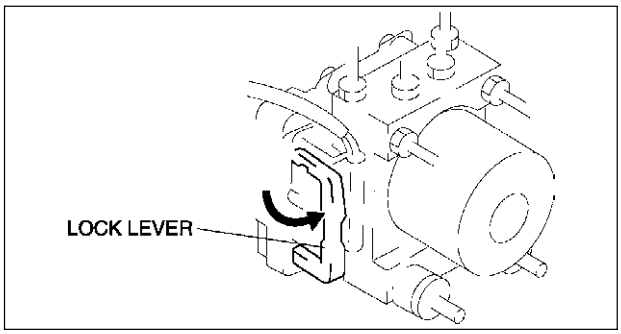

A6E6916W007

ABS (ABS/TCS) OR DSC HU/CM CONFIGURATION

A6E692143700W02

1. Connect the WDS or equivalent to the DLC-2.
2. Input vehicle information following the direction on the WDS or equivalent screen.
3. Select “Module programming”.
4. Select “Programmable module installation”.
5. Select “ABS/TCS”.
6. Retrieve DTCs by the WDS or equivalent, then verify that there is no DTC present.
   - If DTC is present, perform applicable DTC inspection.

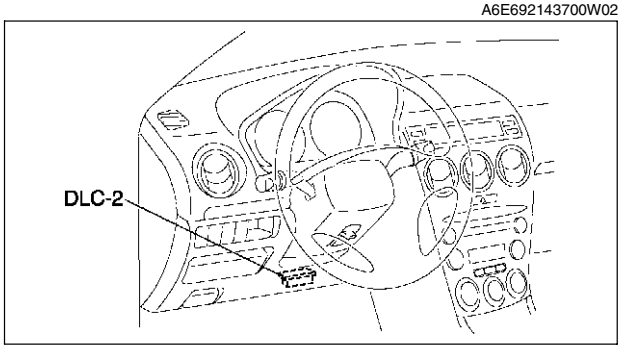

A6E3970W002

ABS (ABS/TCS) HU/CM INSPECTION

A6E692167650W01

1. Disconnect the negative battery cable.
2. Connect the **SST** between the ABS (ABS/TCS) HU/CM and harness connector with the ignition switch off.
3. Attach the tester leads to the **SST** and inspect voltage referring the table below.

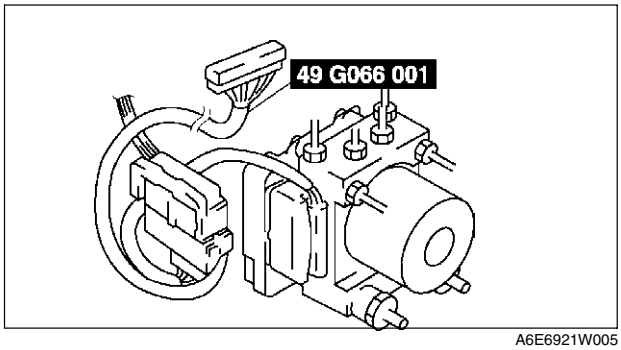

A6E6921W005

Terminal Voltage Table (Reference)
(Engine is idling, and connector is connected unless otherwise indicated.)

ABS (ABS/TCS) HU/CM HARNESS SIDE CONNECTOR

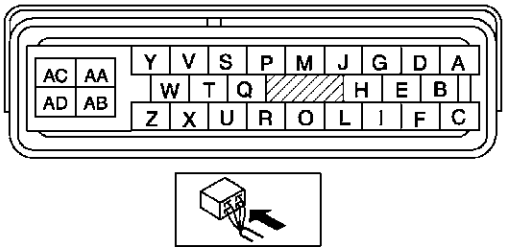

SST (49 G066 001) CONNECTOR

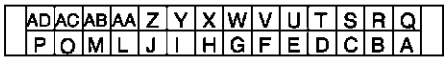

A6E6921W001

Terminal	Signal	Connected to	Test condition	Voltage (V)	Action
A B	RR wheel-speed	RR wheel-speed sensor	Vehicle is stopped	0 (AC)	• Inspect related harness • Inspect ABS wheel-speed sensor
			• Inspect by using the wave profile. (See P–31 Inspection Using An Oscilloscope (Reference))		
C F	LR wheel-speed	LR wheel-speed sensor	Vehicle is stopped	0 (AC)	
			• Inspect by using the wave profile. (See P–31 Inspection Using An Oscilloscope (Reference))		
G D	RF wheel-speed	RF wheel-speed sensor	Vehicle is stopped	0 (AC)	
			• Inspect by using the wave profile. (See P–31 Inspection Using An Oscilloscope (Reference))		
I E	LF wheel-speed	LF wheel-speed sensor	Vehicle is stopped	0 (AC)	
			• Inspect by using the wave profile. (See P–31 Inspection Using An Oscilloscope (Reference))		
H	—	—	—	—	—
K	—	—	—	—	—
L	—	—	—	—	—
M	—	—	—	—	—
N	—	—	—	—	—
O	CAN-H	—	—	No need to check	—
P*1	TCS OFF switch	TCS OFF switch	When switch is pressed	Below 1.0	• Inspect related harness • Inspect TCS OFF switch
			When switch is not pressed	B+	
Q	—	—	—	—	—
R	CAN-L	—	—	No need to check	—
S	—	—	—	—	—
T	—	—	—	—	—
U*2	—	DLC	—	No need to check	—
V	Vehicle speed output	Cruise actuator, Wiper and washer switch, Audio unit, Car-navigation unit, Headlight leveling actuator	Vehicle is stopped	0	• Inspect related harness • Inspect ABS wheel-speed sensor
W	—	—	—	—	—
X	OBD	KLN terminal of DLC-2	It cannot be determined with terminal voltage whether the condition is good or bad because advanced function diagnostic output is performed with serial communication. Inspect with service codes.		• Inspect related harness • Inspect ABS/TCS HU/CM

Terminal	Signal	Connected to	Test condition	Voltage (V)	Action
Y	Brake switch	Brake switch	Brake pedal is depressed	10—14	• Inspect related harness
			Brake pedal is released	Below 0.5	
Z	Power supply	Ignition switch	—	B+	• Inspect related harness
AA	Power supply (Solenoid valve)	Battery	—	B+	• Inspect related harness
AB	Power supply (ABS motor)	Battery	—	B+	
AC	Ground	Ground	—	0	• Inspect related harness
AD	Ground	Ground	—	0	• Inspect related harness

*1 : With TCS
*2 : Use this terminal at factory only, not used for inspection and repair at field

Inspection Using An Oscilloscope (Reference)
Wheel speed

- ABS/TCS HU/CM terminal:
  RR : A (+) — B (-)
  LR : C (+) — F (-)
  RF : D (+) — G (-)
  LF : E (+) — I (-)
- Oscilloscope setting:
  1 V/DIV (Y), 2 ms/DIV (X), AC range
- Vehicle condition: Driving 30 km/h (18.6 mph)

Note
- As vehicle speed increases, period of wave shortens.
- If there is malfunctioning in the sensor rotor, wave profile warps.

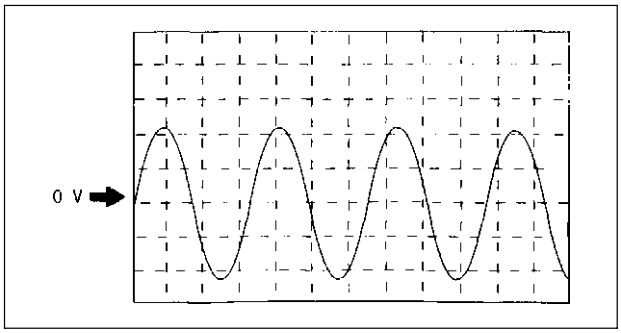

Z3U0413W201

Vehicle speed output

- ABS/TCS HU/CM terminal: V(+) — AC (-)
- Oscilloscope setting:
  1 V/DIV (Y), 5 ms/DIV (X), DC range
- Vehicle condition: Driving 30 km/h (18.6 mph)

Note
- As vehicle speed increases, period of wave shortens.

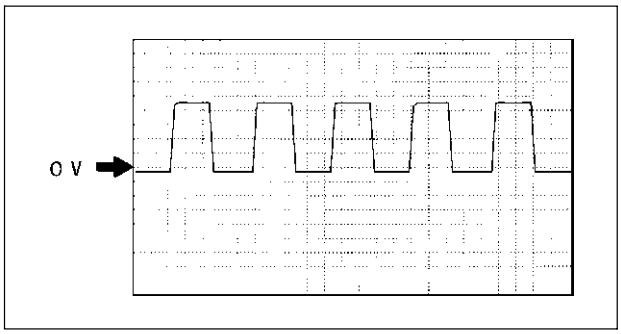

Z3U0413W202

TCS (DSC) OFF SWITCH REMOVAL/INSTALLATION

A6E692167650W02

1. Press the hooks of the TCS OFF switch and pull the switch out.
2. Disconnect the connector.
3. Install in the reverse order of removal.

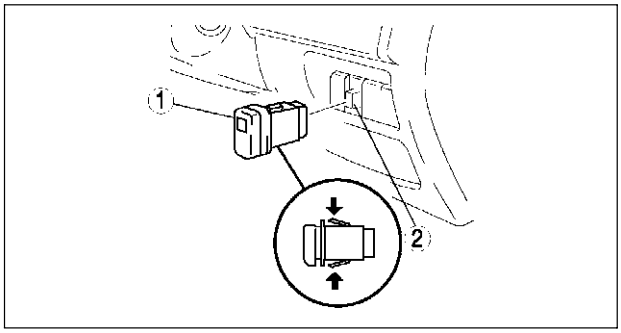

A6E6921W008

TCS (DSC) OFF SWITCH INSPECTION

A6E692167650W03

1. Remove the TCS OFF switch.
2. Inspect for continuity between the TCS OFF switch terminals using an ohmmeter.

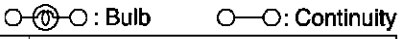

Condition	Terminal			
	A	B	C	D
When the switch is pressed	○—(0)—○		○	○—○
When the switch is released	○—(0)—○			

A6E6921W010

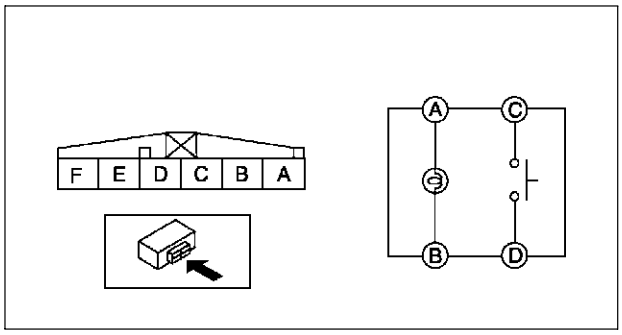

A6E6921W009

- If not within the specification, replace the TCS OFF switch.

FRONT ABS WHEEL-SPEED SENSOR REMOVAL/INSTALLATION

A6E692143720W01

1. Remove the mud guard.
2. Remove in the order indicated in the table.
3. Install in the reverse order of removal.

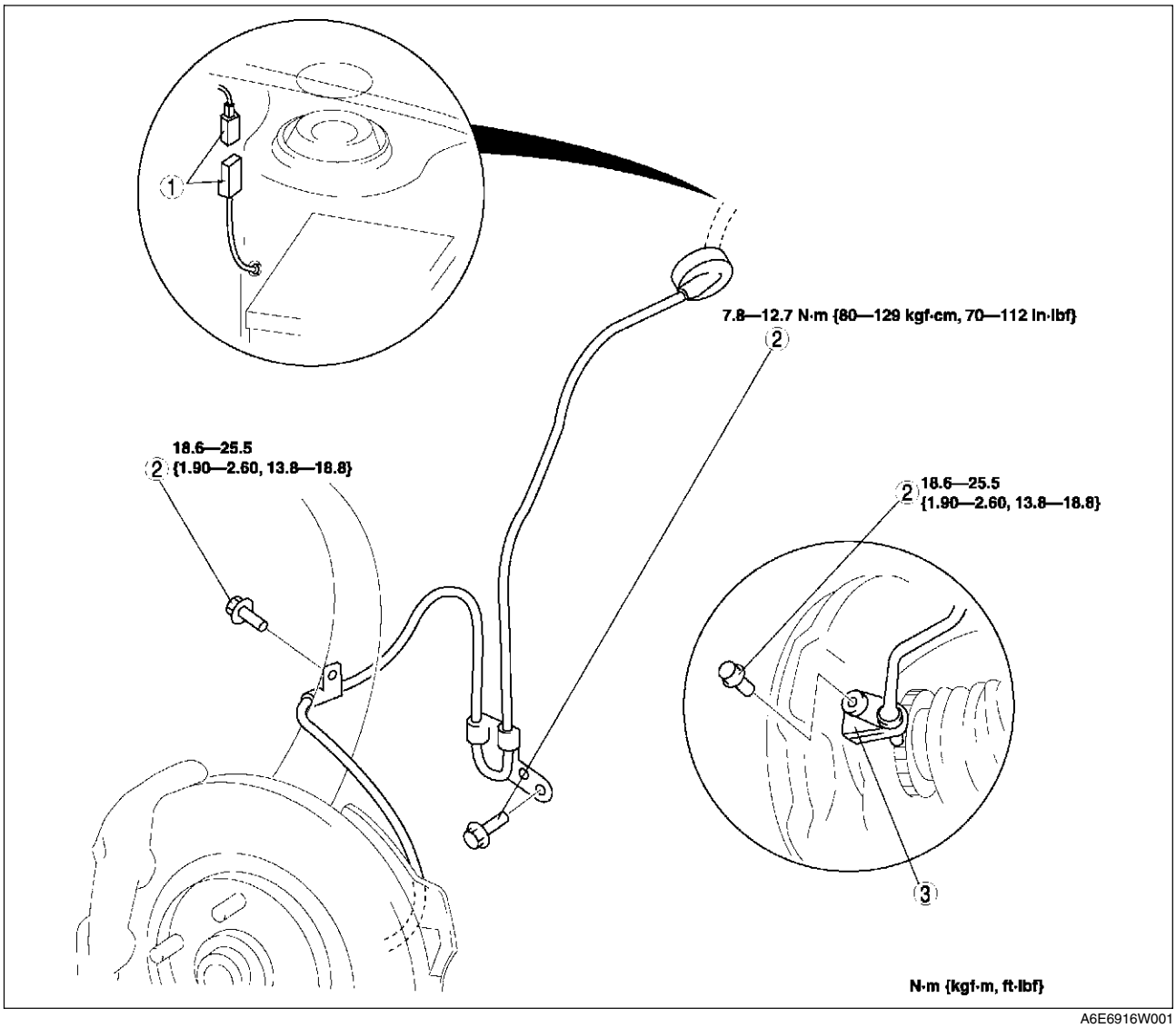

A6E6916W001

1	Connector
2	Bolt

3	Front ABS wheel-speed sensor

FRONT/REAR ABS WHEEL-SPEED SENSOR INSPECTION

A6E692143720W02

Visual Inspection

1. Remove the wheel and tire, and inspect the sensor for looseness and damage. Replace the sensor if necessary.

Clearance Inspection

1. Inspect the clearance between the wheel-speed sensor and the sensor rotor.

Clearance
0.3—1.1 mm {0.012—0.043 in}

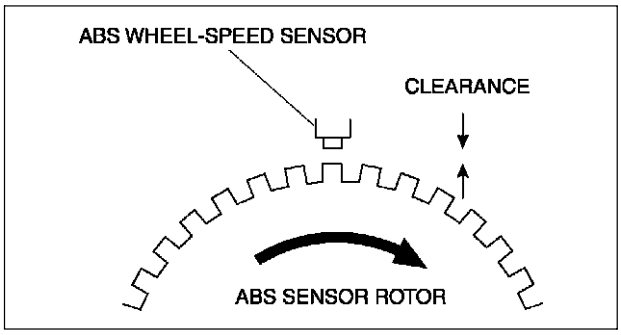

A6E6921W003

Resistance Inspection

1. Disconnect the ABS wheel-speed sensor connector.
2. Inspect the resistance at the ABS wheel-speed sensor.
   - If not as specified, replace the ABS wheel-speed sensor.

Resistance
1.3—1.7 kilohm

Voltage Inspection

1. On level ground, jack up the vehicle and support it evenly on safety stands.
2. Disconnect the ABS wheel-speed sensor connector.
3. Inspect each sensor by rotating each wheel one revolution per second.
   - If not as specified, replace the ABS wheel-speed sensor.

Voltage
0.25—1.2 V (AC)

Voltage Pattern Inspection

1. On level ground, jack up the vehicle and support it evenly on safety stands.
2. Disconnect the ABS wheel-speed sensor connector.
3. Using an oscilloscope, inspect voltage pattern for distortion and noise by rotating each wheel.
   - If there is distortion or noise, inspect the ABS sensor rotor.

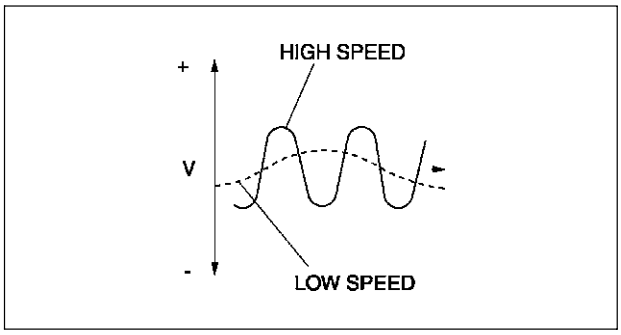

A6E6921W004

REAR ABS WHEEL-SPEED SENSOR REMOVAL/INSTALLATION

A6E692143710W01

1. Remove the tire house trim.S–91 TIRE HOUSE TRIM REMOVAL/INSTALLATION.)
2. Remove in the order indicated in the table.
3. Install in the reverse order of removal.

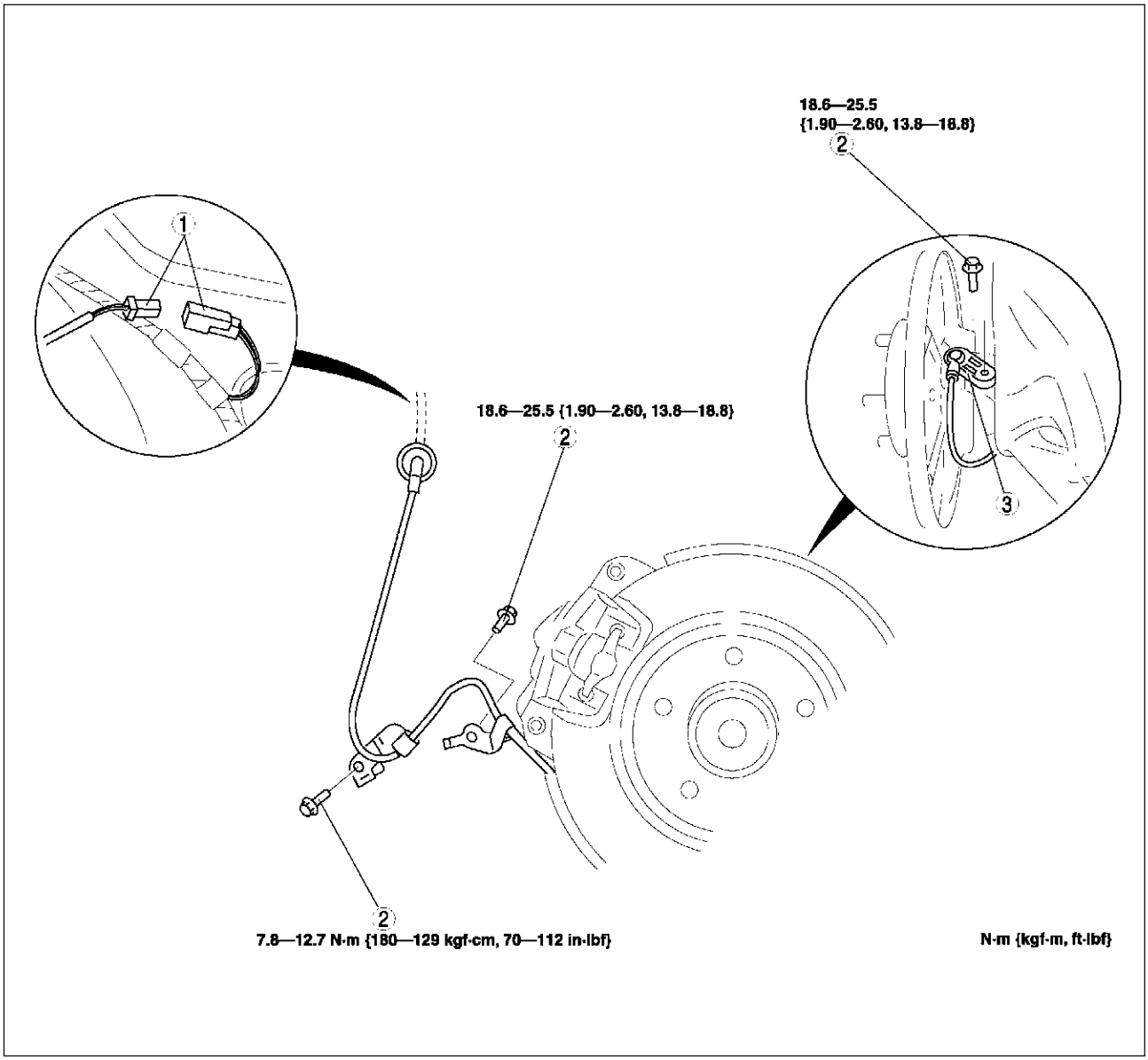

A6E6916W002

1	Connector
2	Bolt

3	Rear ABS wheel-speed sensor

DYNAMIC STABILITY CONTROL

DSC SYSTEM INSPECTION

A6E692067650W01

Preparation

1. Verify that the battery is fully charged.
2. With ignition switch on, verify that the ABS warning light goes out after **2.4 seconds**.
3. Turn the ignition switch off.
4. On level ground, jack up the vehicle and support it evenly on safety stands.
5. Shift the transaxle to N position.
6. Release the parking brake.
7. Rotate the wheels by hand, and inspect for brake drag.

Operation of DSC Inspection

1. Perform the “Preparation.”
2. Connect WDS or equivalent to the DLC-2.
3. Set up an active command modes inspection according to the combination of commands below.

Note

- When working with two people, one should press on the brake pedal, the other should attempt to rotate the wheel being inspected.

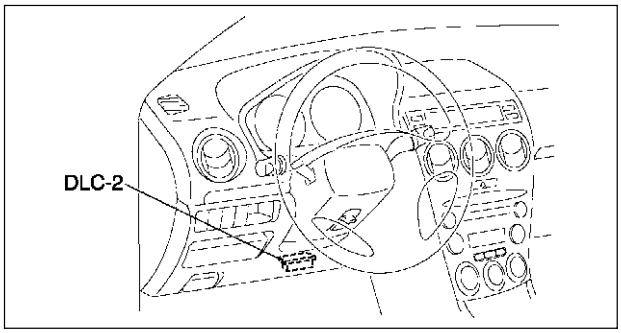

A6E3970W002

P

Pressure retention

<table>
<tr><th rowspan="2">Command name</th><th colspan="4">Wheels</th></tr>
<tr><th>LF</th><th>RF</th><th>LR</th><th>RR</th></tr>
<tr><td>LF_TC_VLV</td><td colspan="4" rowspan="4">OFF</td></tr>
<tr><td>RF_TC_VLV</td></tr>
<tr><td>LF_DSC_V</td></tr>
<tr><td>RF_DSC_V</td></tr>
<tr><td>ABS_POWER</td><td colspan="4">ON</td></tr>
<tr><td>LF_INLET</td><td>ON</td><td rowspan="3">OFF</td><td>OFF</td><td rowspan="5">OFF</td></tr>
<tr><td>LF_OUTLET</td><td rowspan="7">OFF</td></tr>
<tr><td>LR_INLET</td><td>ON</td></tr>
<tr><td>LR_OUTLET</td><td rowspan="4">OFF</td></tr>
<tr><td>RF_INLET</td><td>ON</td></tr>
<tr><td>RF_OUTLET</td><td rowspan="3">OFF</td></tr>
<tr><td>RR_INLET</td><td>ON</td></tr>
<tr><td>RR_OUTLET</td><td rowspan="2">OFF</td></tr>
<tr><td>PMP_MOTOR</td></tr>
</table>

Pressure reduction

<table>
<tr><th rowspan="2">Command name</th><th colspan="4">Wheels</th></tr>
<tr><th>LF</th><th>RF</th><th>LR</th><th>RR</th></tr>
<tr><td>LF_TC_VLV</td><td colspan="4" rowspan="4">OFF</td></tr>
<tr><td>RF_TC_VLV</td></tr>
<tr><td>LF_DSC_V</td></tr>
<tr><td>RF_DSC_V</td></tr>
<tr><td>ABS_POWER</td><td colspan="4">ON</td></tr>
<tr><td>LF_INLET</td><td rowspan="2">ON</td><td rowspan="2">OFF</td><td>OFF</td><td rowspan="3">OFF</td></tr>
<tr><td>LF_OUTLET</td><td rowspan="2">ON</td></tr>
<tr><td>LR_INLET</td><td rowspan="6">OFF</td></tr>
<tr><td>LR_OUTLET</td><td rowspan="2">ON</td><td rowspan="3">OFF</td></tr>
<tr><td>RF_INLET</td></tr>
<tr><td>RF_OUTLET</td><td rowspan="2">OFF</td><td rowspan="2">ON</td></tr>
<tr><td>RR_INLET</td></tr>
<tr><td>RR_OUTLET</td><td>OFF</td><td>ON</td></tr>
<tr><td>PMP_MOTOR</td><td colspan="4">ON</td></tr>
</table>

Note
- To protect the DSC HU/CM, the solenoid valve used for simulations and the ABS motor stay on for **10 seconds** each time they are switched on.

4. Send the command while pressing on the brake pedal and attempting to rotate the wheel being inspected.
5. When pressure is being maintained, and a click sound indicating the solenoid is operating comes from the DSC HU/CM, confirm that the wheel does not rotate. When pressure is being reduced, and a click sound indicating the solenoid is operating comes from DSC HU/CM, confirm that the wheel rotates, even though the brake pedal is being depressed.
   - Performing the inspections above determines the following.
     — The DSC HU/CM brake lines are normal
     — The DSC HU/CM hydraulic system is not significantly abnormal
     — The DSC HU/CM wiring is normal
     — Output system harness in DSC HU/CM (solenoid, relay) are normal
   - However, the following items cannot be checked.
     — The DSC HU/CM input system harness and parts
     — Extremely small leaks in the DSC HU/CM internal hydraulic system
     — Unusual intermittent occurrences in the above items

DSC Control Inspection

1. Perform the “Preparation.”
2. Connect WDS or equivalent to the DLC-2.
3. Set up an active command modes inspection according to the combination of commands below.

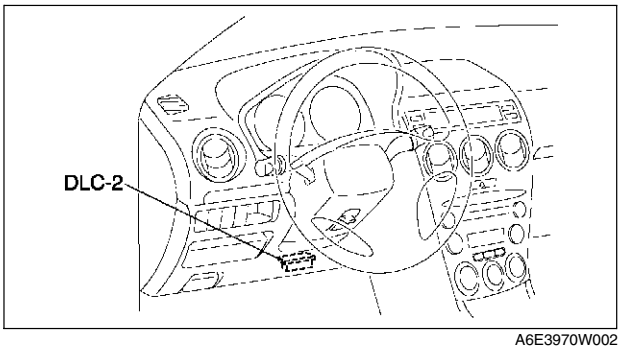

A6E3970W002

Pressure retention

<table>
<tr><th rowspan="3">Command name</th><th colspan="4">Wheels</th></tr>
<tr><th colspan="2">Inhibition of understeer tendency control</th><th colspan="2">Inhibition of oversteer tendency control</th></tr>
<tr><th>LF</th><th>RF</th><th>LR</th><th>RR</th></tr>
<tr><td>LF_TC_VLV</td><td>ON</td><td colspan="2">OFF</td><td>ON</td></tr>
<tr><td>RF_TC_VLV</td><td>OFF</td><td colspan="2">ON</td><td>OFF</td></tr>
<tr><td>LF_DSC_V</td><td colspan="4" rowspan="2">OFF</td></tr>
<tr><td>RF_DSC_V</td></tr>
<tr><td>ABS_POWER</td><td colspan="4">ON</td></tr>
<tr><td>LF_INLET</td><td rowspan="6">OFF</td><td rowspan="2">OFF</td><td rowspan="3">OFF</td><td>ON</td></tr>
<tr><td>LF_OUTLET</td><td rowspan="5">OFF</td></tr>
<tr><td>LR_INLET</td><td>ON</td></tr>
<tr><td>LR_OUTLET</td><td rowspan="4">OFF</td></tr>
<tr><td>RF_INLET</td><td>ON</td></tr>
<tr><td>RF_OUTLET</td><td rowspan="3">OFF</td></tr>
<tr><td>RR_INLET</td><td>ON</td></tr>
<tr><td>RR_OUTLET</td><td>OFF</td></tr>
<tr><td>PMP_MOTOR</td><td colspan="4">ON</td></tr>
</table>

Note

- To protect the DSC HU/CM, the solenoid valve used for simulations and the ABS motor stay on for **10 seconds** each time they are switched on.

4. Send the command while attempting to rotate the wheel being inspected.
5. When pressure is being maintained, and a click sound indicating the solenoid is operating comes from the DSC HU/CM, confirm that the wheel does not rotate.
   - Performing the inspections above determines the following.
     — The DSC HU/CM brake lines are normal
     — The DSC HU/CM hydraulic system is not significantly abnormal
     — The DSC HU/CM wiring is normal
     — Output system harness in DSC HU/CM (solenoid, relay) are normal
   - However, the following items cannot be checked.
     — The DSC HU/CM input system harness and parts
     — Extremely small leaks in the DSC HU/CM internal hydraulic system
     — Unusual intermittent occurrences in the above items

DSC HU/CM REMOVAL/INSTALLATION

A6E692067650W03

Caution

- **When replacing the DSC HU/CM, configuration procedure must be done before removing the DSC HU/CM. If configuration is not completed before removing the DSC HU/CM, DTC B2477 will be detected.**
- **Do not drop the DSC HU/CM. Replace it if it is subjected to an impact.**

1. Configurate the DSC HU/CM (when only replacing it).(See P–29 ABS (ABS/TCS) or DSC HU/CM CONFIGURATION.)
2. Remove the battery, battery tray and battery tray bracket.(See G–3 BATTERY REMOVAL/INSTALLATION.)
3. Remove the under cover.
4. Remove in the order indicated in the table.
5. Install in the reverse order of removal.

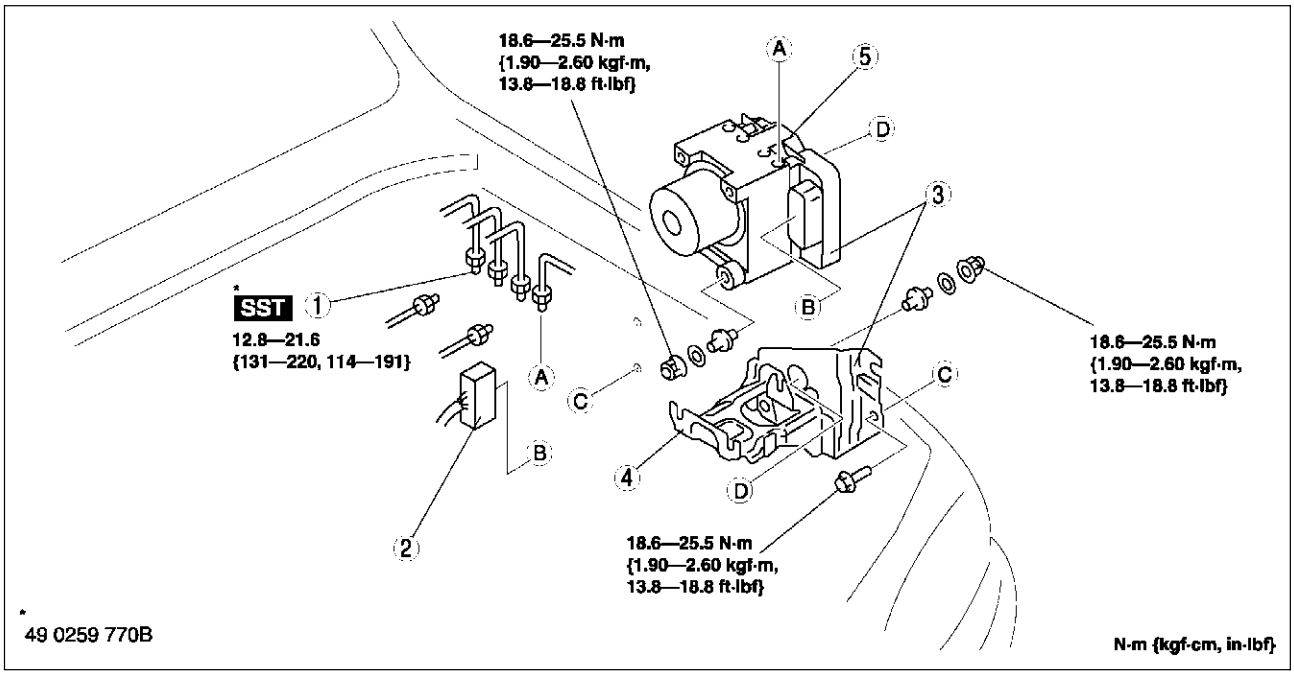

A6E6920W001

1	Connector (See P–39 Connector Removal Note) (See P–39 Connector Installation Note)
2	Brake pipe

3	DSC HU/CM and Bracket (See P–39 DSC HU/CM and Bracket Removal/Installation Note)
4	Bracket
5	DSC HU/CM

Connector Removal Note

1. Rotate the lock lever 40° to the direction A, then push the lock lever to the direction B.

   Caution
   - **After rotated the lever 40° , do not push the lock lever to the direction C. The lock lever will be damaged.**

2. Verify that the lock lever is completely returned.
3. Remove the harness side connector to the direction D.

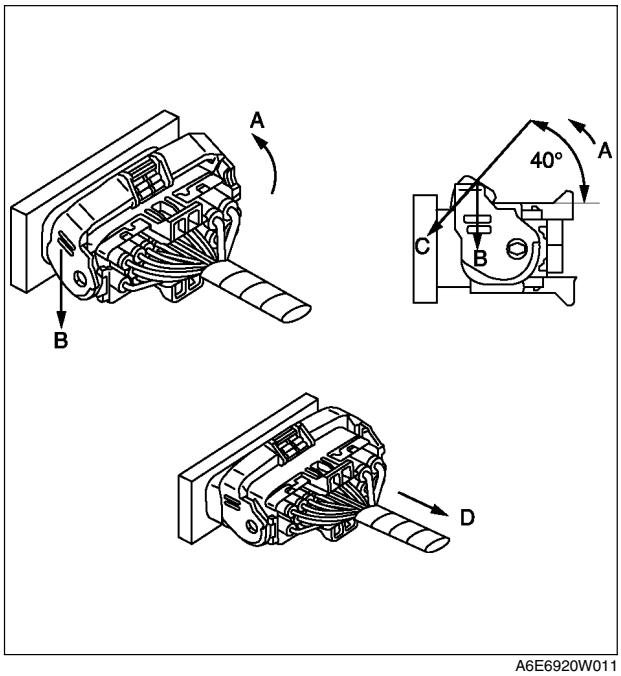

A6E6920W011

DSC HU/CM and Bracket Removal/Installation Note

1. When removing/installing the DSC HU/CM from/to the vehicle, attach a strip of tape on the DSC HU/CM connector to prevent brake fluid from entering.

Connector Installation Note

1. Verify that the connection part and waterproof packing are free of foreign material, then connect the connector.
2. Verify that the lock lever is completely pushed in.

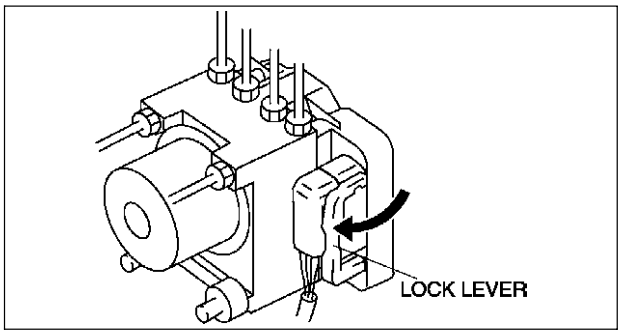

A6E6916W005

DSC HU/CM INSPECTION

A6E692067650W04

1. Remove the battery and battery bracket.
2. Disconnect the DSC HU/CM connector.
3. Connect the **SST** (49 G066 004) to the DSC HU/CM connector and harness side connector.
4. Inspect voltage referring the table below.

Terminal Voltage Table (reference value)

(Ignition switch is at ON, and connector is connected unless indicated otherwise.)

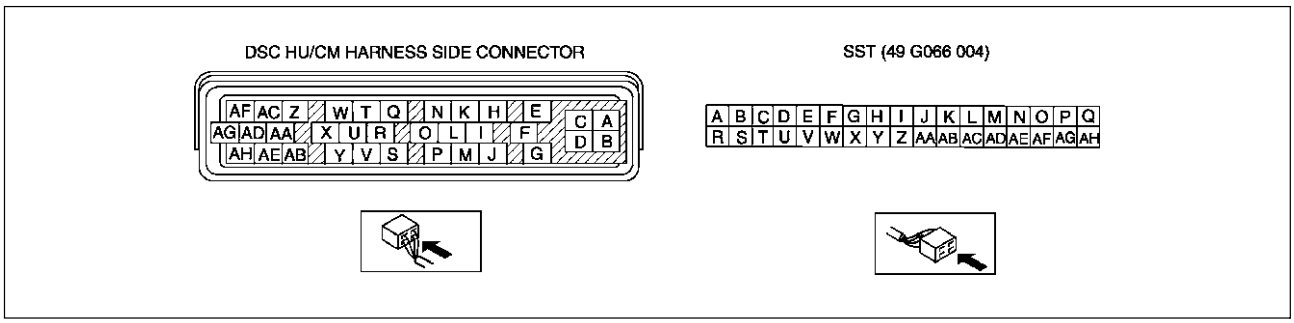

A6E6920W009

Terminal	Signal	Connected to	Test condition	Voltage (V)	Action
A	Ground (1)	Ground part 1	—	Below 1.0	• Inspect related harness
B	Ground (2)	Ground part 2	—	Below 1.0	• Inspect related harness
C	Solenoid valve (power supply)	Battery	—	B+	• Inspect DSC HU/CM • Inspect related harness
D	Pump motor (power supply)	Battery	—	B+	• Inspect DSC HU/CM • Inspect related harness
E*	—	Check connector	—	No need to check	• Inspect related harness
F J	LF wheel-speed	LF wheel-speed sensor	Vehicle is stopped	0 (AC)	• Inspect related harness • Inspect wheel-speed sensor
			• Inspect using the wave profile. (See P–41 Inspection Using An Oscilloscope (Reference))		
K H	RR wheel-speed	RR wheel-speed sensor	Vehicle is stopped	0 (AC)	• Inspect related harness • Inspect wheel-speed sensor
			• Inspect using the wave profile. (See P–41 Inspection Using An Oscilloscope (Reference))		
M I	RF wheel-speed	RF wheel-speed sensor	Vehicle is stopped	0 (AC)	• Inspect related harness • Inspect wheel-speed sensor
			• Inspect using the wave profile. (See P–41 Inspection Using An Oscilloscope (Reference))		
Q N	LR wheel-speed	LR wheel-speed sensor	Vehicle is stopped	0 (AC)	• Inspect related harness • Inspect wheel-speed sensor
			• Inspect using the wave profile. (See P–41 Inspection Using An Oscilloscope (Reference))		
G	Battery (IG)	Ignition switch	Ignition switch ON	B+	• Inspect related harness • Inspect ignition switch
L	Brake switch	Brake switch	When brake pedal is depressed	10—14	• Inspect related harness • Inspect brake switch
O	Lateral-G (lateral-G signal)	Combine sensor	Vehicle is stopped	2.1—2.9	• Inspect related harness • Inspect combine sensor
			Right cornering	Fluctuation between 2.5—4.0	
			Left cornering	Fluctuation between 2.5—1.0	
P	Combine sensor power output	Combine sensor	Ignition switch ON	4.75—5.25	• Inspect related harness • Inspect combine sensor
R	Steering angle (ground)	Steering angle sensor	—	Below 1.0	• Inspect related harness • Inspect steering angle sensor

Terminal	Signal	Connected to	Test condition	Voltage (V)	Action
S	Combine sensor	Combine sensor	—	3.5—5.0	• Inspect related harness • Inspect combine sensor
T	Yaw rate (yaw rate signal)	Combine sensor	Vehicle is stopped	2.3—2.7	• Inspect related harness • Inspect yaw rate sensor
			Right cornering	Fluctuation between 2.5—4.62	
			Left cornering	Fluctuation between 2.5—0.33	
U	Steering angle (neutral signal)	Steering angle sensor	Steering position: center position 25°—29°	Below 1.0	• Inspect related harness • Inspect steering angle sensor
			Except above condition	Approx. 4	
V	—	—	—	—	—
W	Steering angle (steering angle signal 2)	Steering angle sensor	• Inspect using the wave profile. (See P–41 Inspection Using An Oscilloscope (Reference))		• Inspect related harness • Inspect steering angle sensor
X	Steering angle (steering angle signal 1)	Steering angle sensor	• Inspect using the wave profile. (See P–41 Inspection Using An Oscilloscope (Reference))		• Inspect related harness • Inspect steering angle sensor
Y	Combine sensor (ground)	Combine sensor	—	Below 1.0	• Inspect related harness • Inspect combine sensor
AA	DSC OFF switch	DSC OFF switch	When switch is pressed	Below 1.0	• Inspect related harness • Inspect DSC OFF switch
			When switch is not pressed	B+	
AB	OBD	KLN terminal of DLC-2	It cannot be determined with terminal voltage whether the condition is good or bad because advanced function diagnostic output is performed with serial communication. Inspect with service codes.		• Inspect related harness • Inspect DSC HU/CM
AC	Auto cruise set signal output	Auto cruise unit	When auto cruise is ON	Below 1.0	• Inspect related harness • Inspect DSC HU/CM
			When auto cruise is OFF	B+	
AD	—	—	—	—	—
AE	Vehicle speed output	Audio unit, Wiper and washer switch, Car-navegation unit, Auto leveling control unit, Cruise actuator	Vehicle is stopped	0	• Inspect related harness • Inspect front wheel-speed sensor
			• Inspect using the wave profile. (See P–41 Inspection Using An Oscilloscope (Reference))		
AF	CAN-L	—	—	No need to check	—
AG	CAN-H	—	—	No need to check	—
AH	—	—	—	—	—

* : Used for vehicle manufacturing, not used for DSC.

Inspection Using An Oscilloscope (Reference)
Steering angle (steering angle signal 1 and 2)

- DSC HU/CM terminal:
  Steering angle signal 2 : W (+) — R (-)
  Steering angle signal 1 : X (+) — R (-)
- Oscilloscope setting:
  1 V/DIV (Y), 25 ms/DIV (X), DC range
- Vehicle condition: Rotating steering wheel at one revolution per second

Note

- As steering wheel rotation speed increases, period of wave shortens.
- As for shape of steering angle signals 1 and 2, the phase is different.

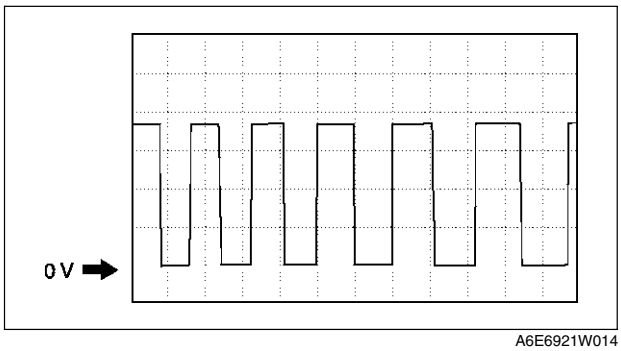

A6E6921W014

P

Wheel speed

- DSC HU/CM terminal:
  RF : M (+) — I (-)
  RR : K (+) — H (-)
  LF : F (+) — J (-)
  LR : Q (+) — N (-)
- Oscilloscope setting:
  1 V/DIV (Y), 2 ms/DIV (X), AC range
- Vehicle condition: Driving 30 km/h (18.6 mph)

Note

- As vehicle speed increases, period of wave shortens.
- If there is malfunctioning in the sensor rotor, wave profile warps.

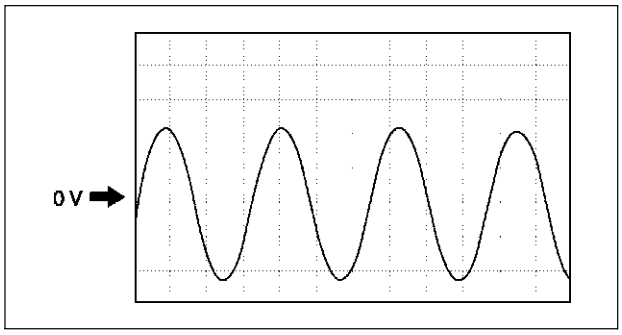

A6E6921W013

Vehicle speed output

- DSC HU/CM terminal: AE (+) — A(-)
- Oscilloscope setting:
  1 V/DIV (Y), 5 ms/DIV (X), DC range
- Vehicle condition: Driving 30 km/h (18.6 mph)

Note

- As vehicle speed increases, period of wave shortens.

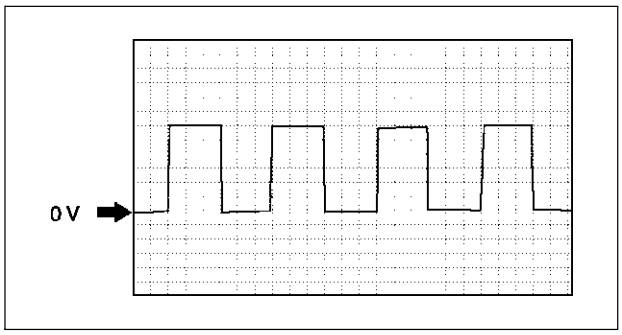

A6E6921W012

COMBINE SENSOR REMOVAL/INSTALLATION

A6E692067650W05

Caution

- **Be careful and do not allow the combine sensor to fall. If by chance it is subjected to strong impact, replace it.**

1. Remove the center console.
2. Remove in the order indicated in the table.

1	Combine sensor connector
2	Combine sensor

3. Install in the reverse order of removal.
4. After installation, perform the combine sensor initialization procedure. (See P–44 COMBINE SENSOR INITIALIZATION PROCEDURE.)

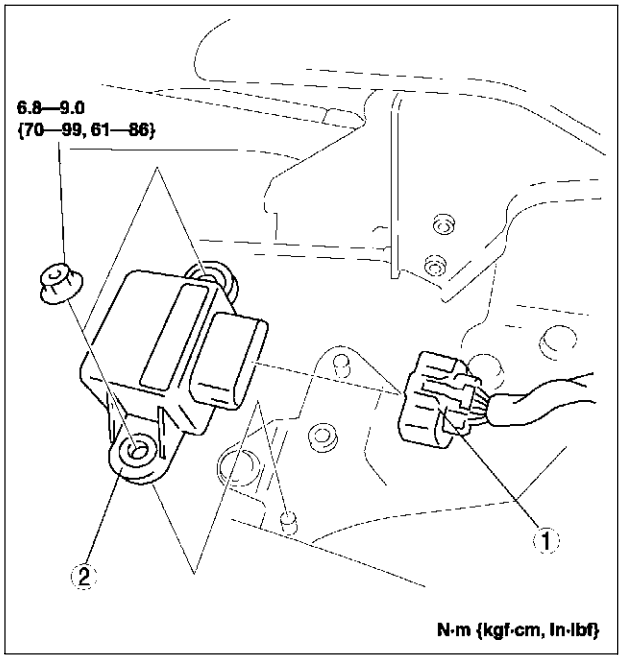

A6E6920W004

COMBINE SENSOR INSPECTION

A6E692067650W06

Caution
- **Be careful and do not allow the lateral-G sensor to fall. If by chance it is subjected to strong impact, replace it.**

1. Connect the connector.
2. Turn ignition switch on, verify the voltage between terminals B and E under the following conditions.
   - If not within the specification, replace the lateral-G sensor.

   (1) Lateral-G
   1) Horizontal

Voltage
2.4—2.6 V

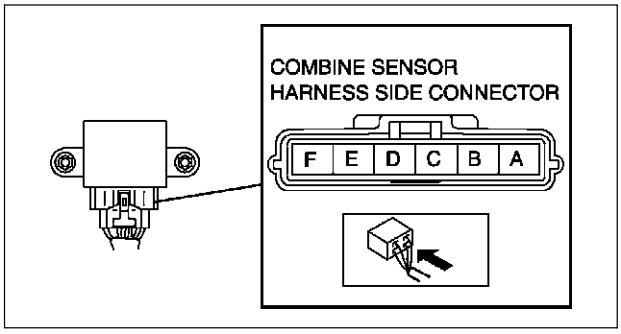

A6E6920W008

2) Facing up (inclined 90° from horizontal)

Voltage
3.3—3.7 V

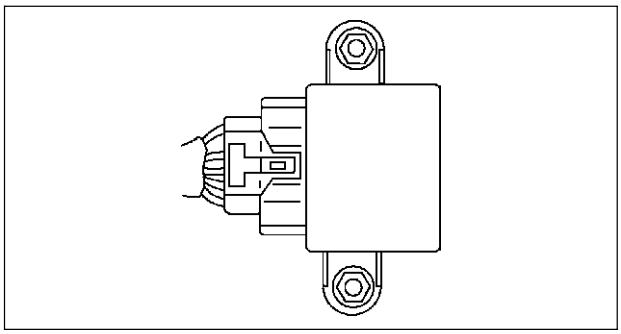

A6E6920W002

3) Facing down (declined 90° from horizontal)

Voltage
1.3—1.7 V

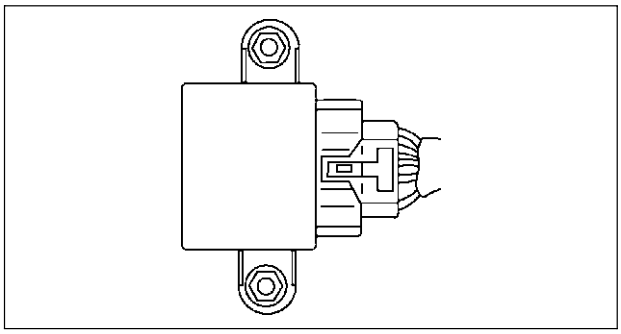

A6E6920W003

(2) Yaw rate
1) Measure yaw rate sensor voltage under static condition.

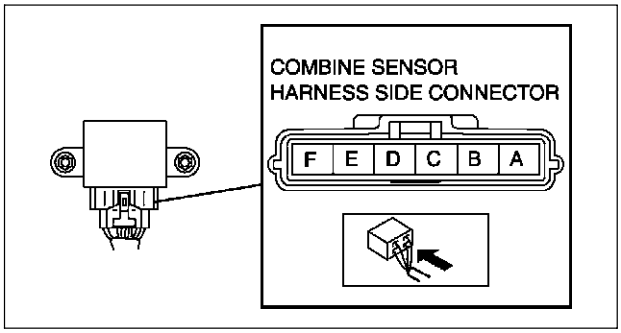

A6E6920W008

P

2) Measure voltage at output terminal D and ground terminal E when the yaw rate sensor is rotated left and right.

Caution

- **Be careful when turning the yaw rate sensor rotation position while it is in a reversed state because the rotation direction and voltage will be reversed.**

Voltage
Right rotation:
fluctuation between 2.5—4.62 V
Left rotation:
fluctuation between 2.5—0.33 V

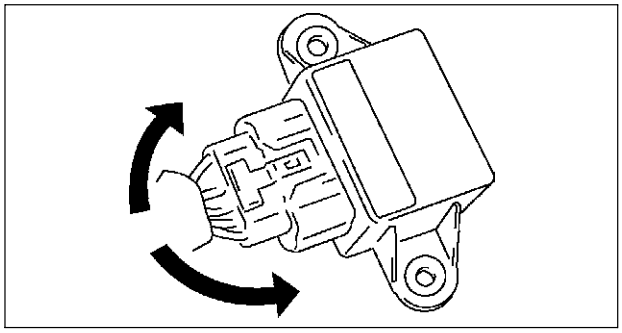

A6E6920W005

COMBINE SENSOR INITIALIZATION PROCEDURE

A6E692067650W07

1. Set the **SST** (WDS or equivalent) to the DLC-2
2. Access the active command mode and select the YAWRATE, then follow the indication on the monitor.
3. Select the LATACCEL and follow the indication on the monitor.

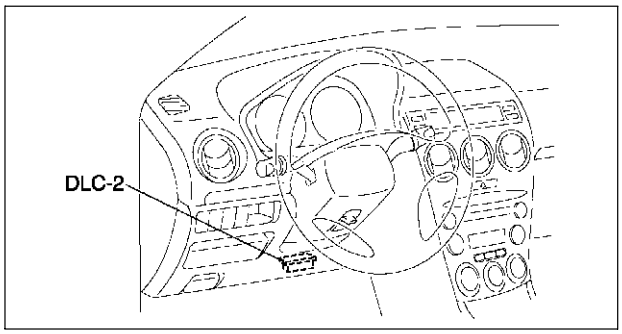

A6E3970W002

STEERING ANGLE SENSOR REMOVAL/INSTALLATION

A6E692067650W08

1. (See T–38 COMBINATION SWITCH DISASSEMBLY/ASSEMBLY.)

STEERING ANGLE SENSOR INSPECTION

A6E692067650W09

1. (See T–39 STEERING ANGLE SENSOR INSPECTION.)

DSC OFF SWITCH REMOVAL/INSTALLATION

A6E692067650W10

1. (See P–31 TCS (DSC) OFF SWITCH REMOVAL/INSTALLATION.)

DSC OFF SWITCH INSPECTION

A6E692067650W11

1. (See P–32 TCS (DSC) OFF SWITCH INSPECTION.)

ON-BOARD DIAGNOSTIC (ABS/TCS)

ABS (ABS/TCS) SYSTEM WIRING DIAGRAM

A6E697567650W01

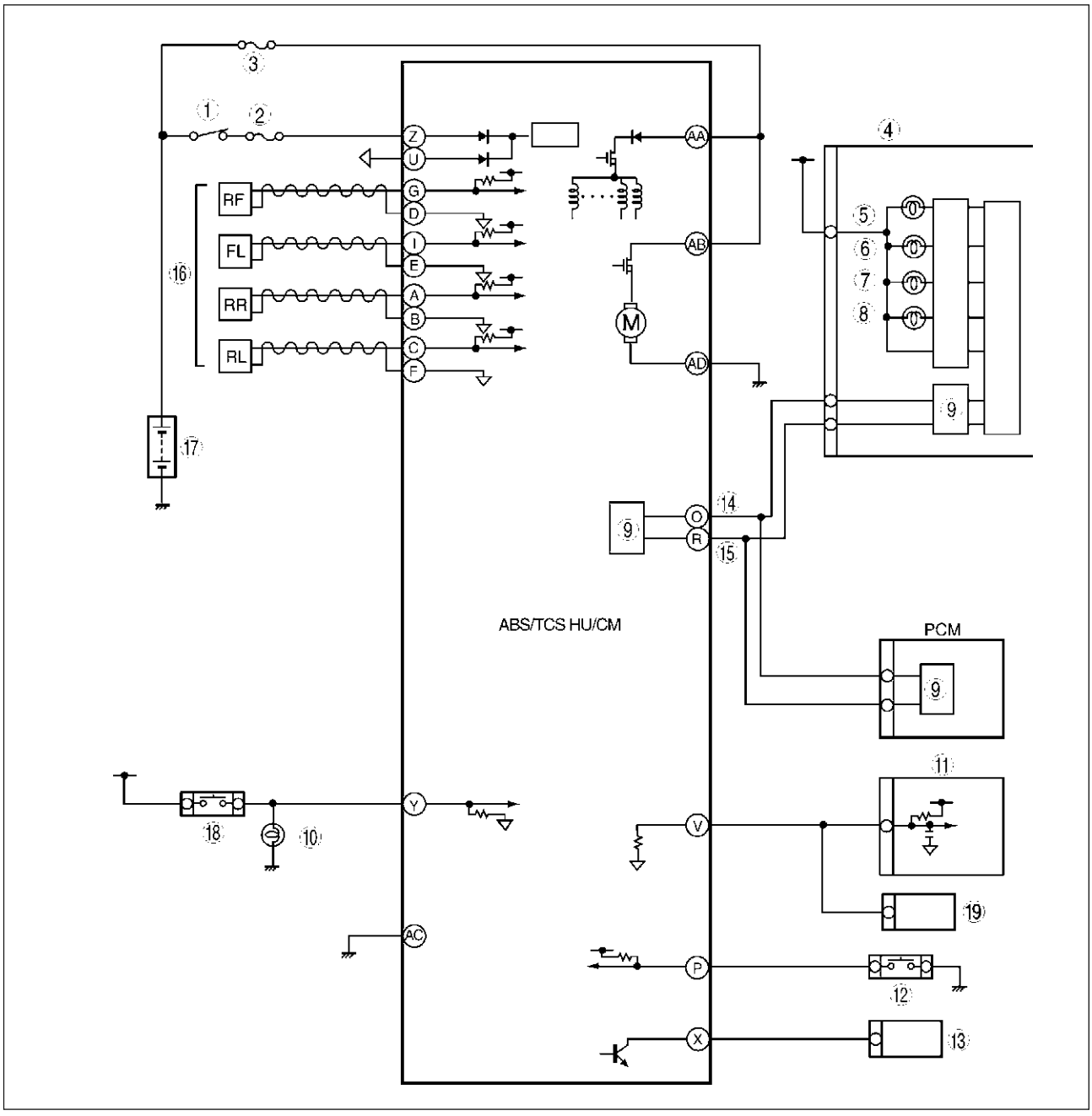

A6E6921T001

1	IG switch
2	SUS 15 A fuse
3	ABS 60 A fuse
4	Meter
5	ABS warning light
6	Brake system warning light
7	TCS OFF light
8	TCS indicator light
9	CAN driver
10	Brake light

11	Cruise actuator
12	TCS OFF switch
13	DLC-2
14	CAN-H
15	CAN-L
16	ABS Wheel-speed sensor
17	Battery
18	Brake switch
19	Audio unit, Wiper and washer switch, Car-navigation unit, Auto leveling control unit

ABS (ABS/TCS) ON-BOARD DIAGNOSIS

A6E697567650W02

On-Board Diagnostic (OBD) Test Description

- The OBD test inspects the integrity and function of the ABS (ABS/TCS) and outputs the results when requested by the specific tests.
- On-board diagnostic test also:
  - — Provides a quick inspection of the ABS (ABS/TCS) usually performed at the start of each diagnostic procedure.
  - — Provides verification after repairs to ensure that no other faults occurred during service.
- The OBD test is divided into 3 tests:
  - — Read/clear diagnostic results, PID monitor and record and active command modes.

Read/clear diagnostic results

- This function allows you to read or clear DTCs in the ABS (ABS/TCS) HU/CM memory.

PID/data monitor and record

- This function allows you to access certain data values, input signals, calculated values, and system status information.

Active command modes

- This function allows you to control devices through the WDS or equivalent.

Reading DTCs Procedure

1. Connect WDS or equivalent to the vehicle DLC-2 16-pin connector.
2. Retrieve DTC by WDS or equivalent.

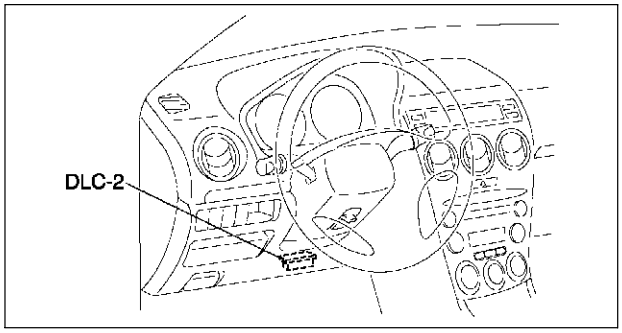

A6E3970W002

Clearing DTCs Procedures

1. After repairs have been made, perform the **DTCs reading procedure**.
2. Erase DTC by WDS or equivalent.
3. Ensure that the customer's concern has been resolved.

PID/Data Monitor and Record Procedure

1. Connect WDS or equivalent to the vehicle DLC-2 16-pin connector.
2. Access and monitor PIDs by WDS or equivalent.

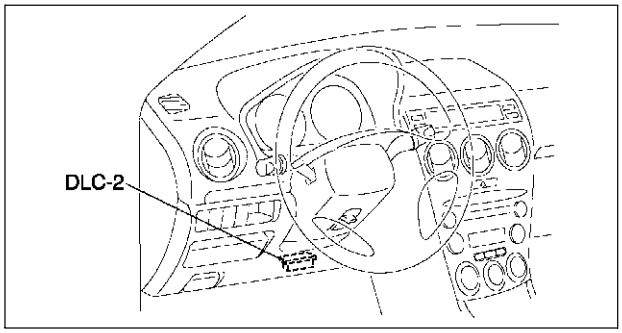

A6E3970W002

Active Command Modes Procedure

Note

- When driving, the ABS motor and each valve forcibly turn ABS_VOLT on, and then each command on. ABS_VOLT regulates the power supply for the ABS motor and 8 valves.

1. Connect WDS or equivalent to the vehicle DLC-2 16-pin connector.
2. Turn the ignition switch to ON (Engine OFF) or start engine.
3. Activate active command modes using WDS or equivalent.

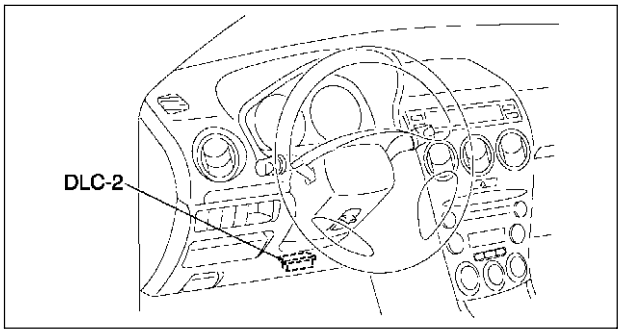

A6E3970W002

DTC Table

DTC WDS or equivalent	Diagnosis system component	Page
B1318	ABS (ABS/TCS) power supply	(See P–50 DTC B1318)
B1342	ABS (ABS/TCS) HU/CM	(See P–52 DTC B1342)
C1095	Motor relay, pump motor	(See P–52 DTC C1095, C1096)
C1096	Motor relay, pump motor	(See P–52 DTC C1095, C1096)
C1119	Engine control system	(See P–54 DTC C1119)
C1140	ABS (ABS/TCS) HU/CM (pump)	(See P–55 DTC C1140)
C1145	Right front wheel-speed sensor	(See P–56 DTC C1145, C1155, C1165, C1175)
C1148	Right front wheel-speed sensor/sensor rotor	(See P–59 DTC C1148, C1158, C1168, C1178, C1233, C1234, C1235, C1236)
C1155	Left front wheel-speed sensor	(See P–56 DTC C1145, C1155, C1165, C1175)
C1158	Left front wheel-speed sensor/sensor rotor	(See P–59 DTC C1148, C1158, C1168, C1178, C1233, C1234, C1235, C1236)
C1165	Right rear wheel-speed sensor	(See P–56 DTC C1145, C1155, C1165, C1175)
C1168	Right rear wheel-speed sensor/sensor rotor	(See P–59 DTC C1148, C1158, C1168, C1178, C1233, C1234, C1235, C1236)
C1175	Left rear wheel-speed sensor	(See P–56 DTC C1145, C1155, C1165, C1175)
C1178	Left rear wheel-speed sensor/sensor rotor	(See P–59 DTC C1148, C1158, C1168, C1178, C1233, C1234, C1235, C1236)
C1186	Fail-safe relay	(See P–62 DTC C1186, C1266)
C1194	Left front pressure reduction solenoid valve	(See P–63 DTC C1194, C1198, C1210, C1214, C1242, C1246, C1250, C1254)
C1198	Left front pressure retention solenoid valve	(See P–63 DTC C1194, C1198, C1210, C1214, C1242, C1246, C1250, C1254)
C1210	Right front pressure reduction solenoid valve	(See P–63 DTC C1194, C1198, C1210, C1214, C1242, C1246, C1250, C1254)
C1214	Right front pressure retention solenoid valve	(See P–63 DTC C1194, C1198, C1210, C1214, C1242, C1246, C1250, C1254)
C1233	Left front wheel-speed sensor/sensor rotor	(See P–59 DTC C1148, C1158, C1168, C1178, C1233, C1234, C1235, C1236)
C1234	Right front wheel-speed sensor/sensor rotor	(See P–59 DTC C1148, C1158, C1168, C1178, C1233, C1234, C1235, C1236)
C1235	Right rear wheel-speed sensor/sensor rotor	(See P–59 DTC C1148, C1158, C1168, C1178, C1233, C1234, C1235, C1236)
C1236	Left rear wheel-speed sensor/sensor rotor	(See P–59 DTC C1148, C1158, C1168, C1178, C1233, C1234, C1235, C1236)
C1242	Left rear pressure reduction solenoid valve	(See P–63 DTC C1194, C1198, C1210, C1214, C1242, C1246, C1250, C1254)

DTC WDS or equiva-lent	Diagnosis system component	Page
C1246	Right rear pressure reduction solenoid valve	(See P–63 DTC C1194, C1198, C1210, C1214, C1242, C1246, C1250, C1254)
C1250	Left rear pressure retention solenoid valve	(See P–63 DTC C1194, C1198, C1210, C1214, C1242, C1246, C1250, C1254)
C1254	Right rear ABS pressure retention solenoid valve	(See P–63 DTC C1194, C1198, C1210, C1214, C1242, C1246, C1250, C1254)
C1266	Fail-safe relay	(See P–63 DTC C1194, C1198, C1210, C1214, C1242, C1246, C1250, C1254)
C1414	ABS (ABS/TCS) HU/CM	(See P–64 DTC C1414)
C1508	ABS/TCS HU/CM	(See P–64 DTC C1508)
C1510	Right front solenoid valve, motor or wheel-speed sensor/sensor rotor	(See P–64 DTC C1510, C1511, C1512, C1513)
C1511	Left front solenoid valve, motor or wheel-speed sensor/ sensor rotor	(See P–64 DTC C1510, C1511, C1512, C1513)
C1512	Right rear solenoid valve, motor or wheel-speed sensor/sensor rotor	(See P–64 DTC C1510, C1511, C1512, C1513)
C1513	Left rear solenoid valve, motor or wheel-speed sensor/ sensor rotor	(See P–64 DTC C1510, C1511, C1512, C1513)
U1900	Can communication	(See T–144 DTC U0073, U1900, U2516)
U2021	Invalid/fault data received	(See P–65 DTC U2021)
U2516	Can communication	(See T–144 DTC U0073, U1900, U2516)

PID/DATA Monitor Table

PID Name (Definition)	Unit/Condition	Condition/Specification	Action	ABS (ABS/ TCS) HU/CM/ CM terminal
RPM (Engine speed signal input)	RPM	• Engine is stopped: **0 RPM** • Engine is running: Indicates engine speed	Inspect PCM.	—
CCNTABS (Number of continuous codes)	—	DTC is detected: **1—255** DTC is not detected: **0**	Perform inspection using appropriate DTC.	—
PMPSTAT (Pump motor output state)	ON/OFF	• Pump motor is activated: ON • Pump motor is deactivated: OFF	Inspect ABS (ABS/TCS) HU/CM. (See P–27 ABS (ABS/TCS) HU/CM SYSTEM INSPECTION)	—
BOO_ABS (Brake pedal switch input)	ON/OFF	• Brake pedal is depressed: ON • Brake pedal is released: OFF	Inspect brake switch.	Y
ABS_LAMP (ABS warning light driver output state)	ON/OFF	• ABS warning light is illuminated: ON • ABS warning light is not illuminated: OFF	Inspect ABS warning light.	—
BRAKE_LMP (BRAKE system warning light output state)	ON/OFF	• BRAKE system warning light is illuminated: ON • BRAKE system warning light is not illuminated: OFF	Inspect BRAKE system warning light.	—
ABSRR_O (Right rear ABS pressure reduction solenoid valve output state)	ON/OFF	• During ABS control: ON/ OFF (solenoid valve is activated/deactivated) • Not ABS control: OFF (solenoid valve is deactivated)	Internal fault of ABS (ABS/ TCS) HU/CM. Replace ABS (ABS/TCS) HU/CM. (See P–28 ABS (ABS/TCS) HU/CM REMOVAL/ INSTALLATION)	—

PID Name (Definition)	Unit/Condition	Condition/Specification	Action	ABS (ABS/TCS) HU/CM/CM terminal
ABSLR_O (Left rear ABS pressure reduction solenoid valve output state)	ON/OFF	• During ABS or EBD control: ON/OFF (solenoid valve is activated/deactivated) • Not ABS and EBD control: OFF (solenoid valve is deactivated)	Internal fault of ABS (ABS/TCS) HU/CM. Replace ABS (ABS/TCS) HU/CM. (See P–28 ABS (ABS/TCS) HU/CM REMOVAL/INSTALLATION)	—
ABSRF_O (Right front ABS pressure reduction solenoid valve output state)	ON/OFF	• During ABS control: ON/OFF (solenoid valve is activated/deactivated) • Not ABS control: OFF (solenoid valve is deactivated)	Internal fault of ABS (ABS/TCS) HU/CM. Replace ABS (ABS/TCS) HU/CM. (See P–28 ABS (ABS/TCS) HU/CM REMOVAL/INSTALLATION)	—
ABSLF_O (Left front ABS pressure reduction solenoid valve output state)	ON/OFF	• During ABS control: ON/OFF (solenoid valve is activated/deactivated) • Not ABS control: OFF (solenoid valve is deactivated)	Internal fault of ABS (ABS/TCS) HU/CM. Replace ABS (ABS/TCS) HU/CM. (See P–28 ABS (ABS/TCS) HU/CM REMOVAL/INSTALLATION)	—
ABSRR_I (Right rear ABS pressure reduction solenoid valve output state)	ON/OFF	• During ABS control: ON/OFF (solenoid valve is activated/deactivated) • Not ABS control: OFF (solenoid valve is deactivated)	Internal fault of ABS (ABS/TCS) HU/CM. Replace ABS (ABS/TCS) HU/CM. (See P–28 ABS (ABS/TCS) HU/CM REMOVAL/INSTALLATION)	—
ABSLR_I (Left rear ABS pressure retention solenoid valve output state)	ON/OFF	• During ABS or EBD control: ON/OFF (solenoid valve is activated/deactivated) • Not ABS and EBD control: OFF (solenoid valve is deactivated)	Internal fault of ABS (ABS/TCS) HU/CM. Replace ABS (ABS/TCS) HU/CM. (See P–28 ABS (ABS/TCS) HU/CM REMOVAL/INSTALLATION)	—
ABSRF_I (Right front ABS pressure retention solenoid valve output state)	ON/OFF	• During ABS control: ON/OFF (solenoid valve is activated/deactivated) • Not ABS control: OFF (solenoid valve is deactivated)	Internal fault of ABS (ABS/TCS) HU/CM. Replace ABS (ABS/TCS) HU/CM. (See P–28 ABS (ABS/TCS) HU/CM REMOVAL/INSTALLATION)	—
ABSLF_I (Left front ABS pressure retention solenoid valve output state)	ON/OFF	• During ABS control: ON/OFF (solenoid valve is activated/deactivated) • Not ABS control: OFF (solenoid valve is deactivated)	Internal fault of ABS (ABS/TCS) HU/CM. Replace ABS (ABS/TCS) HU/CM. (See P–28 ABS (ABS/TCS) HU/CM REMOVAL/INSTALLATION)	—
ABSVLVRLY (Fail-safe relay output state)	ON/OFF	• Fail-safe relay is activated: ON • Fail-safe relay is deactivated: OFF	Inspect ABS (ABS/TCS) HU/CM. (See P–29 ABS (ABS/TCS) HU/CM INSPECTION)	—
ABSPMPRLY (Motor relay output state)	ON/OFF	• Motor relay is activated: ON • Motor relay is deactivated: OFF	Inspect ABS (ABS/TCS) HU/CM. (See P–29 ABS (ABS/TCS) HU/CM INSPECTION)	—
LF_WSPD (Left front wheel-speed sensor input)	KPH or MPH	• Vehicle is stopped: **0 KPH {0 MPH}** • Vehicle is driving: Indicates vehicle speed	Inspect wheel-speed sensor/sensor rotor.	E, I

PID Name (Definition)	Unit/Condition	Condition/Specification	Action	ABS (ABS/TCS) HU/CM/CM terminal
RF_WSPD (Right front wheel-speed sensor input)	KPH or MPH	• Vehicle is stopped: **0 KPH {0 MPH}** • Vehicle is driving: Indicates vehicle speed	Inspect wheel-speed sensor/sensor rotor.	D, G
LR_WSPD (Left rear wheel-speed sensor input)	KPH or MPH	• Vehicle is stopped: **0 KPH {0 MPH}** • Vehicle is driving: Indicates vehicle speed	Inspect wheel-speed sensor/sensor rotor.	C, F
RR_WSPD (Right rear wheel-speed sensor input)	KPH or MPH	• Vehicle is stopped: **0 KPH {0 MPH}** • Vehicle is driving: Indicates vehicle speed	Inspect wheel-speed sensor/sensor rotor.	A, B
ABS_VOLT (System battery voltage value)	V	• Ignition key at ON: **B+** • Idle: **Approx. 14—16 V**	Inspect power supply circuit. (See P–29 ABS (ABS/TCS) HU/CM INSPECTION)	Z

Acrive Command Mode

Command Name	Definition	Operation	Note
ABS_POWER	Fail-safe relay	ON/OFF	Ignition key at ON (Engine OFF), and driving
LR_OUTLET	Left rear ABS pressure reduction solenoid valve	ON/OFF	
LR_INLET	Left rear ABS pressure retention solenoid valve	ON/OFF	
RR_INLET	Right rear ABS pressure retention solenoid valve	ON/OFF	
RR_OUTLET	Right rear ABS pressure reduction solenoid valve	ON/OFF	
LF_INLET	Left front ABS pressure retention solenoid valve	ON/OFF	
LF_OUTLET	Left front ABS pressure reduction solenoid valve	ON/OFF	
RF_INLET	Right front ABS pressure retention solenoid valve	ON/OFF	
RF_OUTLET	Right front ABS pressure reduction solenoid valve	ON/OFF	
PMP_MOTOR	ABS motor	ON/OFF	
VS_OUTPUT	Vehicle speed signal output	SPEED	

DTC B1318

A6E697567650W03

Caution

- **When attaching the tester lead to the ABS (ABS/TCS) HU/CM harness connector, the SST (49 G066 001) must be used. (See P–29 ABS (ABS/TCS) HU/CM INSPECTION.)**

DTC B1318	ABS (ABS/TCS) power supply
DETECTION CONDITION	• Low voltage is detected at the voltage monitor of solenoid valve monitor, or the motor monitor.
POSSIBLE CAUSE	• Malfunction of fuse (SUS 15 A) • Open or short to power circuit in harness between DSC HU/CM terminal G and battery positive terminal • Open circuit in harness between body ground and ABS (ABS/TCS) HU/CM terminal A • Battery and/or generator malfunction

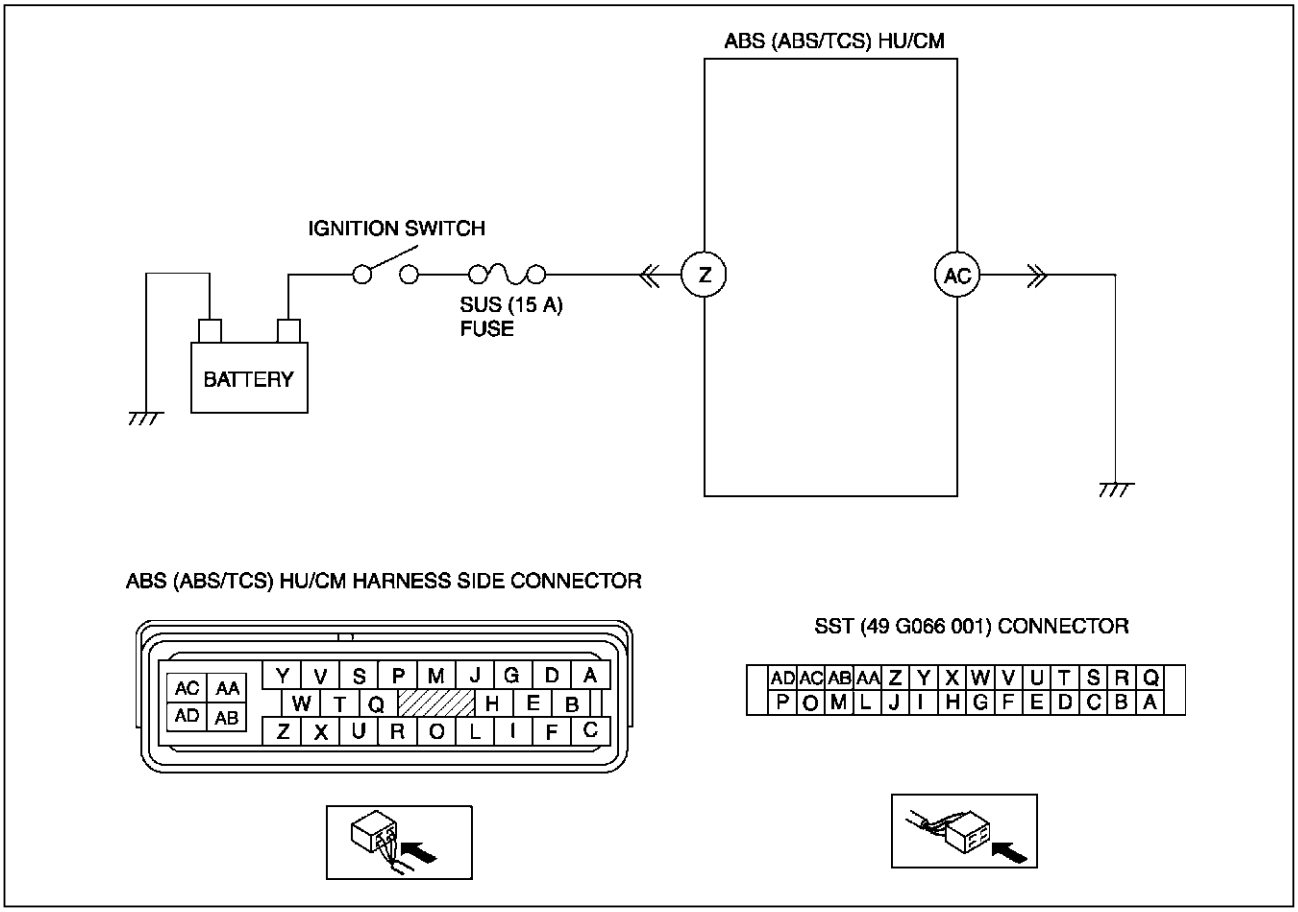

Diagnostic procedure

STEP	INSPECTION		ACTION
1	**INSPECT BATTERY VOLTAGE** • Is battery terminal voltage okay?	Yes	Make sure that battery terminal connection is okay. Go to next step.
		No	Charge or replace battery, then go to Step 6.
2	**INSPECT BATTERY GRAVITY** • Is battery specific gravity as specified?	Yes	Go to next step.
		No	Replace battery, then go to Step 6.
3	**INSPECT CHARGING SYSTEM** • Are generator and drive belt tension okay?	Yes	Go to next step.
		No	Adjust drive belt tension as necessary. Replace generator and/or drive belt as necessary.
4	**INSPECT ABS (ABS/TCS) HU/CM POWER SUPPLY CIRCUIT FOR OPEN CIRCUIT** • Start engine. • Measure voltage between ABS (ABS/TCS) HU/CM terminal Z and ground. • Is voltage **above 10 V**?	Yes	Go to next step.
		No	Go to Step 6.
5	**INSPECT ABS (ABS/TCS) HU/CM GROUND CIRCUIT FOR POOR GROUND OR OPEN CIRCUIT** • Turn ignition key to OFF. • Measure resistance between ground and DSC HU/CM terminal AC. • Is resistance **within 0—1 ohm**?	Yes	Go to next step.
		No	If there is no continuity: • Repair or replace harness for open circuit between ABS (ABS/TCS) HU/CM and ground, then go to next step. If resistance is not **within 0—1 ohm**: • Repair or replace harness for poor ground then go to next step.
6	**VERIFY TROUBLESHOOTING COMPLETED** • Make sure to reconnect all disconnected connectors. • Clear DTC from memory. (See P–46 Clearing DTCs Procedures) • Is same DTC present?	Yes	Replace ABS (ABS/TCS) HU/CM, then go to next step.
		No	Go to next step.
7	**VERIFY AFTER REPAIR PROCEDURE** • Is there any other DTC present?	Yes	Go to applicable DTC inspection.
		No	Troubleshooting completed.

DTC B1342

A6E697567650W04

Caution

- **When attaching the tester lead to the ABS (ABS/TCS) HU/CM harness connector, the SST (49 G066 001) must be used. (See P–29 ABS (ABS/TCS) HU/CM INSPECTION.)**

DTC B1342	ABS (ABS/TCS) HU/CM
DETECTION CONDITION	The on-board diagnostic function detects control module malfunction.
POSSIBLE CAUSE	• Malfunction of ABS (ABS/TCS) HU/CM

Diagnostic procedure

STEP	INSPECTION		ACTION
1	**VERIFY CURRENT STATUS OF MALFUNCTION** • Clear DTC from memory. (See P–46 Clearing DTCs Procedures) • Start engine and drive vehicle at **10 km/h {6.2 mph}** or above. • Is same DTC present?	Yes	Replace ABS (ABS/TCS) HU/CM, then go to next step.
		No	Inspect intermittent concern using the same procedure as engine control system.
2	**VERIFY AFTER REPAIR PROCEDURE** • Is there any other DTC present?	Yes	Go to applicable DTC inspection.
		No	Troubleshooting completed.

DTC C1095, C1096

A6E697567650W06

Caution

- **When attaching the tester lead to the ABS (ABS/TCS) HU/CM harnesses connector the SST (49 G066 001) must be used. (See P–29 ABS (ABS/TCS) HU/CM INSPECTION.)**

DTC C1095, C1096	Motor relay, pump motor
DETECTION CONDITION	• C1095: — ABS motor stuck OFF when vehicle is started or during ABS operation, ABS motor ON is commanded. • C1096: — ABS motor stuck OFF when vehicle is started or during ABS operation, ABS motor ON is commanded. — Motor monitor ON signal is not input after specified time when the motor signal is switched from ON to OFF by ABS (ABS/TCS) HU/CM.
POSSIBLE CAUSE	• Open, or short to power or short to ground of motor relay and/or ABS motor in ABS (ABS/TCS) HU/CM • Stuck motor relay and/or ABS motor • Open circuit of ABS motor power supply • Open circuit of ABS motor ground

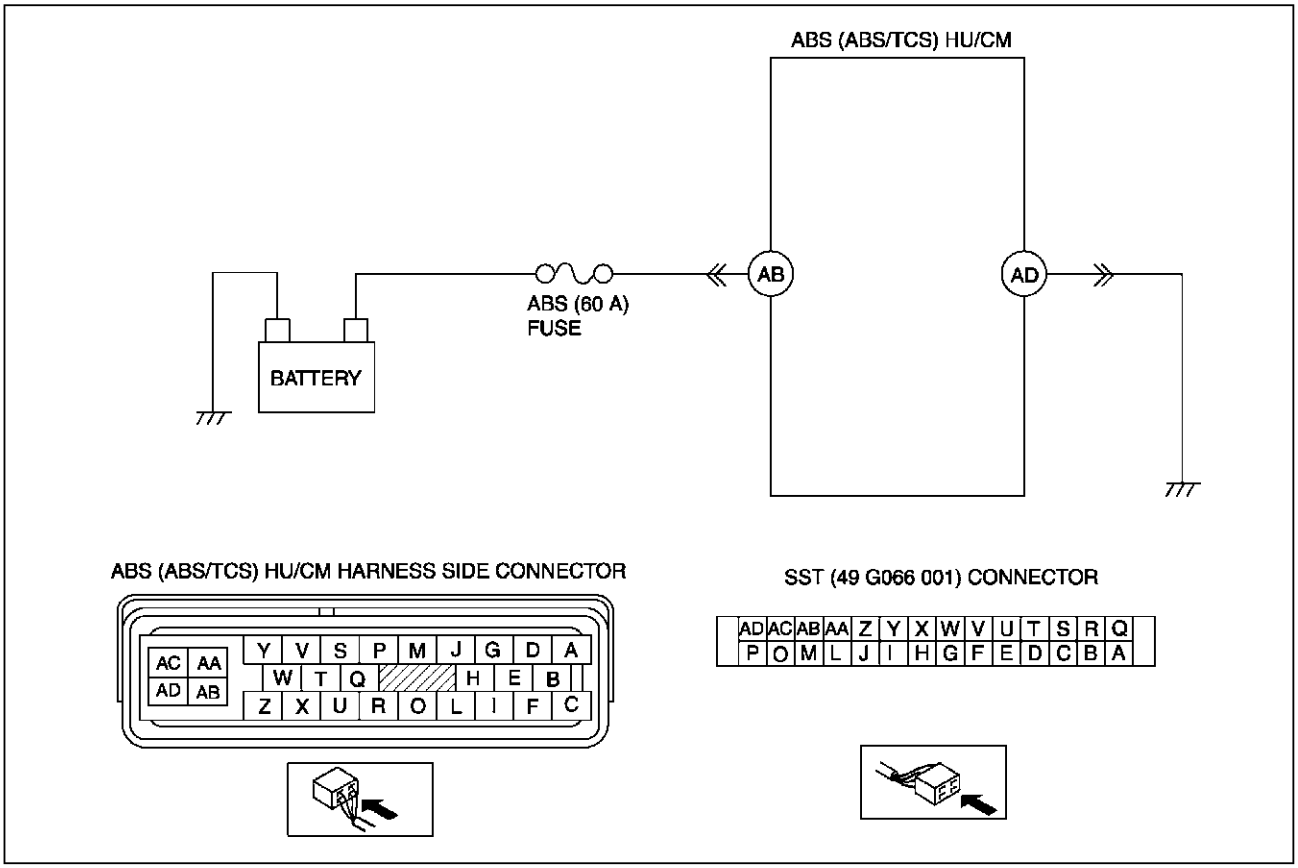

Diagnostic procedure

STEP	INSPECTION		ACTION
1	**VERIFY OTHER DTC HAS BEEN RECORDED** • If any of DTC C1186 and/or C1266 has also been stored?	Yes	Go to applicable DTC inspection.
		No	Go to next step.
2	**INSPECT ABS FUSE CONDITION** • Is ABS fuse (60 A) okay?	Yes	Go to next step.
		No	Replace fuse, then go to Step 6.
3	**INSPECT MOTOR RELAY POWER SUPPLY CIRCUIT FOR OPEN CIRCUIT** • Turn ignition key to OFF. • Disconnect ABS (ABS/TCS) HU/CM connector. • Connect **SST** (adapter harness) to ABS (ABS/TCS) HU/CM connector (harness side only). • Turn ignition key to ON (engine OFF). • Measure voltage between ABS (ABS/TCS) HU/CM terminal AB (harness side) of **SST** and ground. • Is voltage **B+**?	Yes	Go to next step.
		No	Repair or replace harness for open circuit between battery positive terminal and ABS (ABS/TCS) HU/CM terminal AC, then go to Step 6.
4	**INSPECT PUMP MOTOR GROUND CIRCUIT FOR OPEN CIRCUIT** • Turn ignition key to OFF. • Inspect continuity between ABS (ABS/TCS) HU/CM terminal AD (harness side) of **SST** and ground. • Is there continuity?	Yes	Go to next step.
		No	Repair or replace harness for open circuit between ABS (ABS/TCS) HU/CM terminal AB and ground, then go to Step 6.

P

STEP	INSPECTION		ACTION
5	**VERIFY PUMP MOTOR OPERATION** • Turn ignition key to OFF. • Remove **SST** (adapter harness) and connect all disconnected connectors. • Connect WDS or equivalent to DLC-2. • Turn ignition key to ON (engine OFF). • Access ABS_POWER and PMP_MOTOR active command modes using WDS or equivalent. • Does pump motor operate?	Yes	Go to next step.
		No	Repair ABS (ABS/TCS) HU/CM, then go to next step.
6	**VERIFY TROUBLESHOOTING COMPLETED** • Clear DTC from memory. (See P–46 Clearing DTCs Procedures) • Start engine and drive vehicle at **10 km/h {6.2 mph}** or above. • Gradually slow down and stop vehicle. • Is same DTC present?	Yes	Replace ABS (ABS/TCS) HU/CM, then go to next step.
		No	Go to next step.
7	**VERIFY AFTER REPAIR PROCEDURE** • Is there any other DTC present?	Yes	Go to applicable DTC inspection.

DTC C1119

A6E697567650W07

DTC C1119	Engine control system, torque reduction inhibit signal line
DETECTION CONDITION	• Engine RPM information through CAN is out of specification or invalid value • Throttle information through CAN is out of specification or invalid value
POSSIBLE CAUSE	• Malfunction of PCM

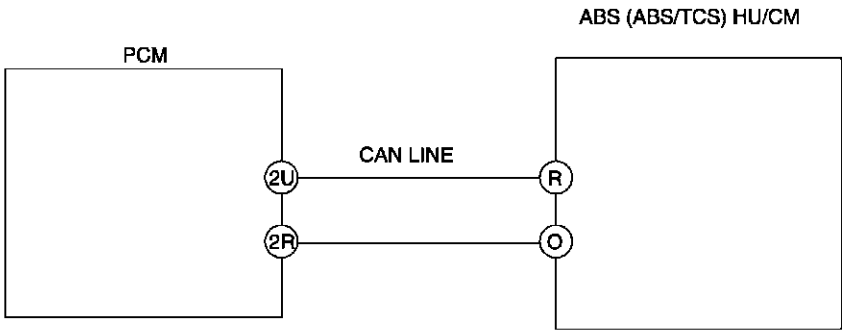

ABS (ABS/TCS) HU/CM HARNESS SIDE CONNECTOR

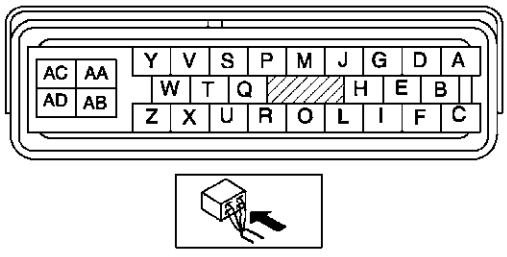

SST (49 G066 001) CONNECTOR

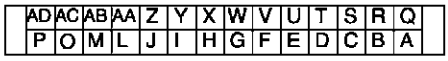

PCM HARNESS SIDE CONNECTOR

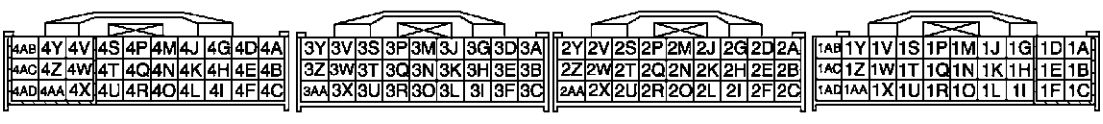

Diagnostic procedure

STEP	INSPECTION		ACTION
1	**CHECK FOR CAN FOR DTCs** • If any of DTC U1900 and/or U2516 has also been stored?	Yes	Follow inspection procedures for CAN system. See T–144 DTC U0073, U1900, U2516
		No	Go to next step.
2	**CHECK FOR PCM FOR DTCs** • Turn ignition key to OFF. • Connect WDS or equivalent to DLC-2 • Turn ignition key to ON (engine OFF). • Is DTC for engine control system obtained?	Yes	Follow inspection procedures for engine control system.
		No	Go to next step.
3	**VERIFY TROUBLESHOOTING COMPLETED** • Make sure to reconnect all disconnected connectors. • Clear DTC from memory. (See P–46 Clearing DTCs Procedures • Start engine.) • Is same DTC present?	Yes	Replace DSC HU/CM, then go to next step.
		No	Go to next step.
4	**VERIFY AFTER REPAIR PROCEDURE** • Is there any other DTC present?	Yes	Go to applicable DTC inspection.
		No	Troubleshooting completed.

DTC C1140

A6E697567650W09

Caution

- **When attaching the tester lead to the ABS (ABS/TCS) HU/CM harness connector, the SST (49 G066 001) must be used. (See P–29 ABS (ABS/TCS) HU/CM INSPECTION.)**

P

DTC C1140	ABS (ABS/TCS) HU/CM (pump)
DETECTION CONDITION	Right front and left rear wheels, or left front and right rear wheel-lock is detected during ABS (ABS/TCS) operation.
POSSIBLE CAUSE	Stuck pump motor in ABS (ABS/TCS) HU/CM

Diagnostic procedure

STEP	INSPECTION		ACTION
1	**INSPECT ABS (ABS/TCS) HU/CM OPERATION** • Perform ABS (ABS/TCS) HU/CM system inspection. (See P–27 ABS (ABS/TCS) HU/CM SYSTEM INSPECTION) • Is it okay?	Yes	Go to next step.
		No	Replace ABS (ABS/TCS) HU/CM, then go to Step 4.
2	**INSPECT CONVENTIONAL BRAKE OPERATION** • Inspect brake fluid level. • Start engine. • Perform a road test to verify conventional vehicle braking performance. • Is there any concern.	Yes	Inspect conventional brake line, then go to Step 4.
		No	Go to next step.
3	**INSPECT REAR BRAKE DRAGGING** • Turn ignition key to OFF. • Jack-up vehicle and support it with safety stand. • Release parking brake. • Turn rear wheel by hand and inspect for rear brake drag. • Is rear brake dragging?	Yes	Repair parking brake system, then go to next step.
		No	Go to next step.
4	**VERIFY TROUBLESHOOTING COMPLETED** • Clear DTC from memory. (See P–46 Clearing DTCs Procedures) • Start engine and drive vehicle at **10 km/h {6.2 mph}** or above at least one minute. • Gradually slow down vehicle and stop. • Is same DTC present?	Yes	Replace ABS (ABS/TCS) HU/CM, then go to next step.
		No	Go to next step.
5	**VERIFY AFTER REPAIR PROCEDURE** • Is there any other DTC present?	Yes	Go to applicable DTC inspection.
		No	Troubleshooting completed.

DTC C1145, C1155, C1165, C1175

A6E697567650W10

Caution

- **When attaching the tester lead to the ABS (ABS/TCS) HU/CM harness connector, the SST (49 G066 001) must be used. (See P–29 ABS (ABS/TCS) HU/CM INSPECTION.)**

DTC	**C1145** **C1155** **C1165** **C1175**	**RF wheel-speed sensor** **LF wheel-speed sensor** **RR wheel-speed sensor** **LR wheel-speed sensor**
DETECTION CONDITION	• Abnormal input is detected.	
POSSIBLE CAUSE	• Open or short to ground circuit in harness between ABS (ABS/TCS) HU/CM terminal and wheel-speed sensor(s) terminal below — ABS (ABS/TCS) HU/CM terminal G—RF ABS wheel-speed sensor terminal A — ABS (ABS/TCS) HU/CM terminal D—RF ABS wheel-speed sensor terminal B — ABS (ABS/TCS) HU/CM terminal I—LF ABS wheel-speed sensor terminal A — ABS (ABS/TCS) HU/CM terminal E—LF ABS wheel-speed sensor terminal B — ABS (ABS/TCS) HU/CM terminal A—RR ABS wheel-speed sensor terminal A — ABS (ABS/TCS) HU/CM terminal B—RR ABS wheel-speed sensor terminal B — ABS (ABS/TCS) HU/CM terminal C—LR ABS wheel-speed sensor terminal A — ABS (ABS/TCS) HU/CM terminal F—LR ABS wheel-speed sensor terminal B • ABS wheel-speed sensor(s) malfunction	

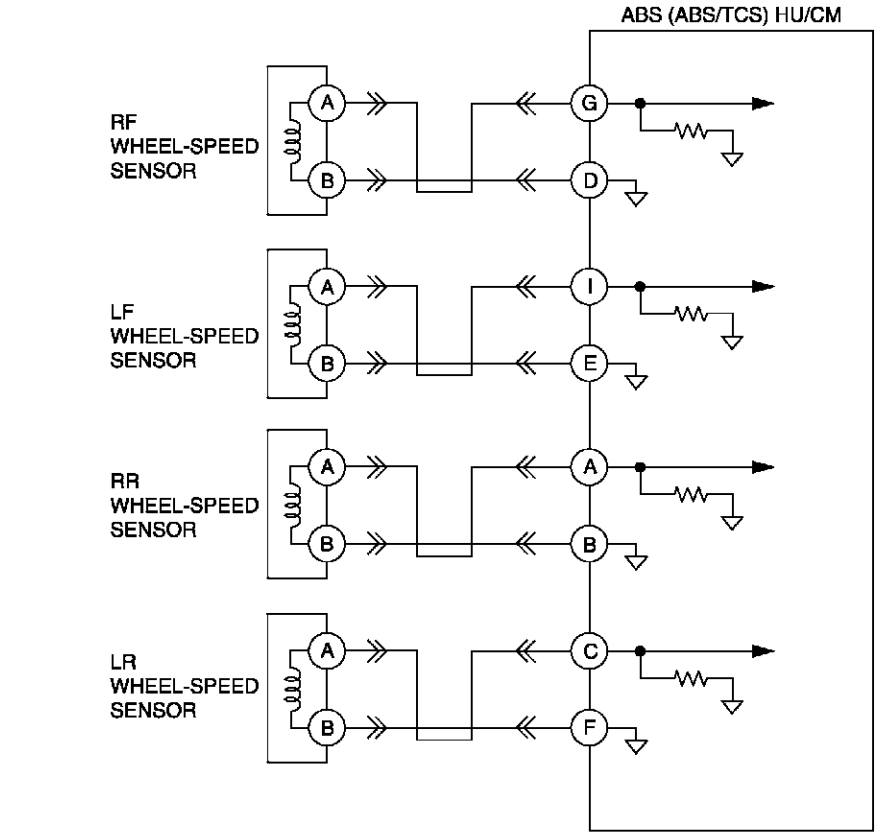

ABS (ABS/TCS) HU/CM HARNESS SIDE CONNECTOR

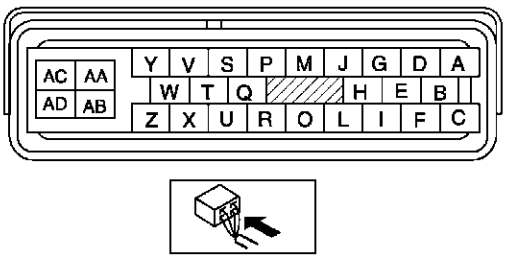

SST (49 G066 001) CONNECTOR

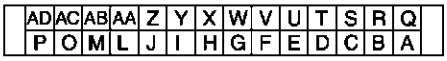

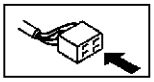

ABS WHEEL-SPEED SENSOR HARNESS SIDE CONNECTOR

FRONT

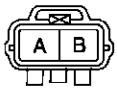

REAR



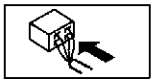

P

Diagnostic procedure

STEP	INSPECTION		ACTION
1	**INSPECT WHEEL-SPEED SENSOR CIRCUIT FOR OPEN CIRCUIT** • Turn ignition key to OFF. • Disconnect ABS (ABS/TCS) HU/CM connector. • Measure resistance between suspected sensor terminals of ABS (ABS/TCS) HU/CM connector (harness side). — RF wheel-speed sensor: G—D — LF wheel-speed sensor: I—E — RR wheel-speed sensor: A—B — LR wheel-speed sensor: C—F • Is resistance **within 1.3—1.7 kilohm**?	Yes	Go to next step.
		No	Go to Step 3.
2	**INSPECT WHEEL-SPEED SENSOR CIRCUIT FOR SHORT TO GROUND** • Turn ignition key to OFF. • Inspect continuity between suspected sensor terminal(s) of ABS (ABS/TCS) HU/CM connector (harness side) and ground(s). — RF wheel-speed sensor: G—D — LF wheel-speed sensor: I—E — RR wheel-speed sensor: A—B — LR wheel-speed sensor: C—F • Is there continuity?	Yes	Repair or replace harness for short to ground circuit between ABS (ABS/TCS) HU/CM and wheel-speed sensor(s), then go to Step 5.
		No	Go to Step 5.
3	**INSPECT WHEEL-SPEED SENSOR** • Turn ignition key to OFF. • Disconnect suspected sensor connector(s) and inspect resistance between sensor terminals (part side). • Is resistance **within 1.3—1.7 kilohm**?	Yes	Go to next step.
		No	Replace wheel-speed sensor, then go to Step 5.
4	**INSPECT ABS (ABS/TCS) HU/CM TO WHEEL-SPEED SENSOR CIRCUIT FOR OPEN CIRCUIT** • Inspect continuity between suspected sensor terminal(s) of ABS (ABS/TCS) HU/CM connector (harness side) and wheel-speed sensor connector. (vehicle harness side) — RF wheel-speed sensor (+): G—A — RF wheel-speed sensor (–): D—B — LF wheel-speed sensor (+): I—A — LF wheel-speed sensor (–): E—B — RR wheel-speed sensor (+): A—A — RR wheel-speed sensor (–): B—B — LR wheel-speed sensor (+): C—A — LR wheel-speed sensor (–): F—B • Is there continuity?	Yes	Repair or replace poor connections of ABS (ABS/TCS) HU/CM connector and/or wheel-speed sensor connector(s), then go to next step.
		No	Repair or replace harness for open circuits between ABS (ABS/TCS) HU/CM and wheel-speed sensor(s), then go to next step.
5	**VERIFY TROUBLESHOOTING COMPLETED** • Make sure to reconnect all disconnected connectors. • Clear DTC from memory (See P–46 Clearing DTCs Procedures) • Is same DTC present?	Yes	Replace ABS (ABS/TCS) HU/CM, then go to next step.
		No	Go to next step.
6	**VERIFY AFTER REPAIR PROCEDURE** • Is there any other DTC present?	Yes	Go to applicable DTC inspection.
		No	Troubleshooting completed.

DTC C1148, C1158, C1168, C1178, C1233, C1234, C1235, C1236

A6E697567650W11

Caution

- **When attaching the tester lead to the ABS (ABS/TCS) HU/CM harness connector, the SST (49 G066 001) must be used. (See P–29 ABS (ABS/TCS) HU/CM INSPECTION.)**

DTC	**C1148, C1234** **C1158, C1233** **C1168, C1235** **C1178, C1236**	**RF wheel-speed sensor/sensor rotor** **LF wheel-speed sensor/sensor rotor** **RR wheel-speed sensor/sensor rotor** **LR wheel-speed sensor/sensor rotor**
DETECTION CONDITION	• C1148, C1158, C1168, C1178: — Abnormal sensor output is detected on any of four vehicle wheels when the vehicle goes from start to a speed of **10 km/h {6.2 mph}**. — Greater than specified amount of ABS demand occurs from front wheel sensors when vehicle is started. • C1234, C1233, C1235, C1236: — Abnormal sensor output due to chipping of sensor rotor teeth, etc. is detected — ABS control operates for **60 seconds or more**	
POSSIBLE CAUSE	• Short to ground circuit of wheel-speed sensor(s) circuit • Malfunction of ABC wheel-speed sensor(s) • Damaged sensor rotor(s) • Incorrect clearance between ABC wheel-speed sensor and sensor rotor • Poor installation of ABC wheel speed sensor and/or sensor rotor (If the sensor rotor is installed twisted, it may cause output of abnormal wave form at high speeds.) • ABS (ABS/TCS) HU/CM internal damage (Solenoid valve malfunction, pump motor malfunction, or pipe clogging)	

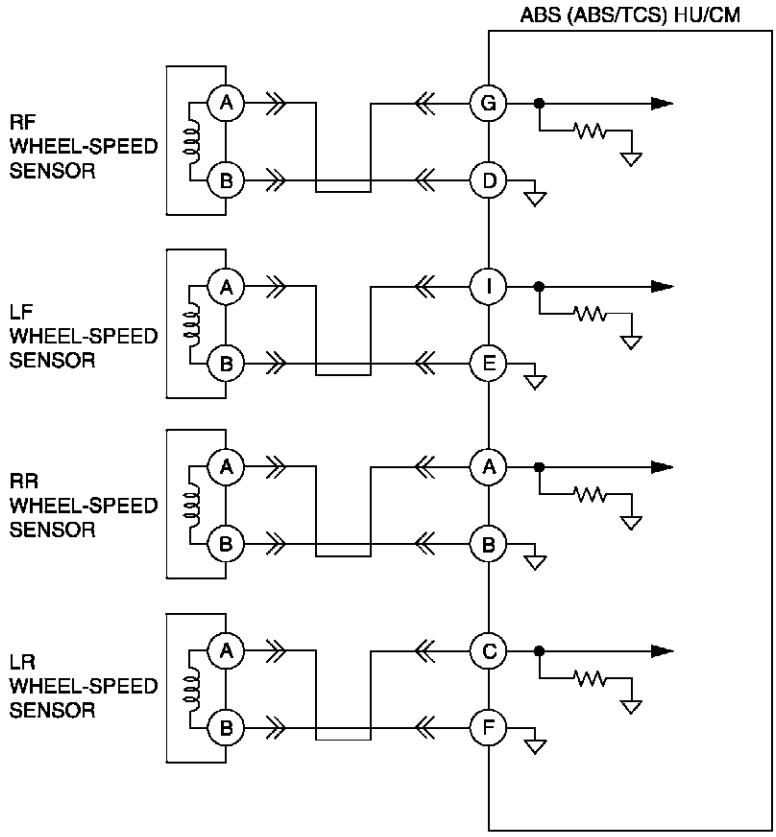

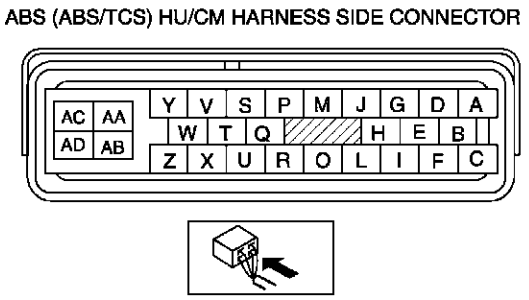

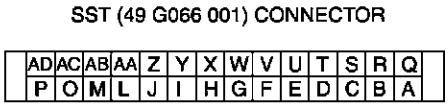

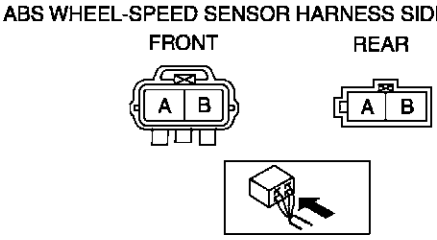

Diagnostic procedure

STEP	INSPECTION		ACTION
1	**VERIFY OTHER DTC HAS BEEN RECORDED** • Have DTCs related to solenoid valve, pump motor, or pump motor relay been stored?	Yes	Go to applicable DTC inspection.
		No	Go to next step.

STEP	INSPECTION		ACTION
2	**VERIFY IF CURRENT CONCERNED INPUT SIGNAL STATUS IS INTERMITTENT OR CONSTANT** • Turn ignition key to OFF. • Connect WDS or equivalent to DLC-2. • Start engine and drive vehicle. • Access LF_WSPD, LR_WSPD, RF_WSPD and RR_WSPD using WDS or equivalent • Do vehicle speeds correspond approximately to the four PIDs above?	Yes	Go to Step 8.
		No	If there is a difference in speed of four wheels: Go to next step. If any wheel speed is **0 km/h {0 mph}**: Go to Step 4.
3	**INSPECT WHEEL-SPEED SENSOR OUTPUT PULSE** • Start engine and drive vehicle. • Inspect output voltage pattern using an oscilloscope. 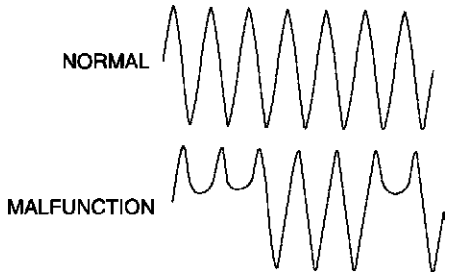 • Is output voltage pattern okay?	Yes	Go to Step 9.
		No	Go to Step 6.
4	**INSPECT ABS WHEEL-SPEED SENSOR CIRCUIT FOR SHORT TO GROUND** • Turn ignition key to OFF. • Disconnect ABS (ABS/TCS) HU/CM and wheel-speed sensor connectors. • Inspect continuity between suspected sensor terminal(s) of ABS (ABS/TCS) HU/CM connector (harness side) and ground(s). — RF wheel-speed sensor: G—ground — LF wheel-speed sensor: I—ground — RR wheel-speed sensor: A—ground — LR wheel-speed sensor: C—ground • Is there continuity?	Yes	Repair or replace harness for short to ground circuit between ABS (ABS/TCS) HU/CM and ABC wheel-sped sensor, then go to Step 9.
		No	Go to next step.
5	**INSPECT WHEEL-SPEED SENSOR** • Turn ignition key to OFF. • Disconnect suspected wheel-speed sensor connector(s) and inspect resistance between wheel-speed sensor terminal(s) (part side). • Is resistance **within 1.3—1.7 kilohm**?	Yes	Go to next step.
		No	Replace wheel-speed sensor(s), then go to Step 9.
6	**INSPECT SENSOR ROTOR CLEARANCE** • Jack-up vehicle and support it with safety stands. • Remove suspected wheel(s). • Inspect clearance between wheel-speed sensor and sensor rotor. • Is clearance **within 0.3—1.1 mm {0.012—0.043 in}**?	Yes	Go to next step.
		No	Replace wheel-speed sensor(s), then go to Step 9.
7	**INSPECT SENSOR ROTOR FOR DAMAGE** • Jack-up vehicle and support it with safety stands. • Remove suspected wheel(s). • Visually inspect sensor rotor for missing, deformed and obstructed teeth. **Number of teeth: 44** • Is sensor rotor okay?	Yes	Go to next step.
		No	Replace sensor rotor, then go to Step 9.

P

STEP	INSPECTION		ACTION
8	**INSPECT ABS (ABS/TCS) HU/CM OPERATION** • Perform ABS (ABS/TCS) HU/CM system inspection. (See P–27 ABS (ABS/TCS) HU/CM SYSTEM INSPECTION) • Is it okay?	Yes	Go to next step.
		No	Replace ABS (ABS/TCS) HU/CM, then go to next step.
9	**VERIFY TROUBLESHOOTING COMPLETED** • Make sure to reconnect all disconnected connectors. • Clear DTC from memory. See P–46 Clearing DTCs Procedures • Start engine and drive vehicle at **10 km/h {6.2 mph}** or above. • Gradually slow down vehicle and stop. • Is same DTC present?	Yes	Replace ABS (ABS/TCS) HU/CM, then go to next step.
		No	Go to next step.
10	**VERIFY AFTER REPAIR PROCEDURE** • Is there any other DTC present?	Yes	Go to applicable DTC inspection.
		No	Troubleshooting completed.

DTC C1186, C1266

A6E697567650W12

Caution

- **When attaching the tester lead to the ABS (ABS/TCS) HU/CM harnesses connector the SST (49 G066 001) must be used. (See P–29 ABS (ABS/TCS) HU/CM INSPECTION.)**

DTC C1186, C1266	Fail-safe relay
DETECTION CONDITION	• C1186: — Fail-safe relay in ABS (ABS/TCS) HU/CM stuck OFF when ignition switch is turned ON, fail-safe relay ON is commanded. • C1266: — Fail-safe relay in ABS (ABS/TCS) HU/CM stuck ON when ignition switch is turned ON, fail-safe relay OFF is commanded.
POSSIBLE CAUSE	• Malfunction of fuse (ABS 60 A) • Open circuit in harness between ABS (ABS/TCS) HU/CM terminal AA and battery positive terminal • Open or short of fail-safe relay in ABS (ABS/TCS) HU/CM • Stuck fail-safe relay in ABS (ABS/TCS) HU/CM

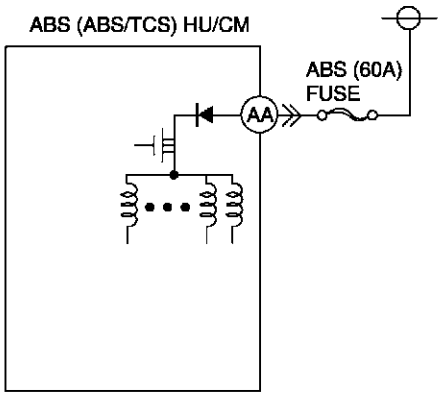

ABS (ABS/TCS) HU/CM HARNESS SIDE CONNECTOR

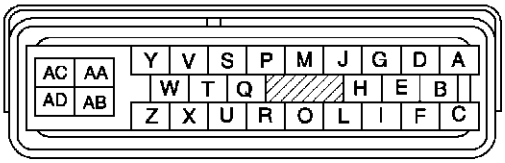

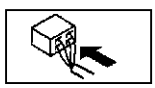

SST (49 G066 001) CONNECTOR

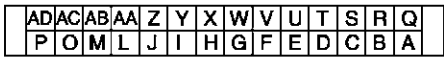



Diagnostic procedure

STEP	INSPECTION		ACTION
1	**INSPECT ABS FUSE CONDITION** • Is ABS fuse (60 A) okay?	Yes	Go to next step.
		No	Replace fuse, then go to Step 4.
2	**INSPECT FAIL-SAFE RELAY POWER SUPPLY CIRCUIT FOR OPEN CIRCUIT** • Turn ignition key to OFF. • Disconnect ABS (ABS/TCS) HU/CM connector. • Connect **SST** (adapter harness) to ABS (ABS/TCS) HU/CM connector (harness side only). • Turn ignition key to ON (engine OFF). • Measure voltage between ABS (ABS/TCS) HU/CM terminal AA (harness side) of **SST** and ground. • Is voltage **B+**?	Yes	Go to next step.
		No	Repair or replace harness for open circuit between battery positive terminal and ABS (ABS/TCS) HU/CM terminal AA, then go to Step 4.
3	**VERIFY FAIL-SAFE OPERATION** • Turn ignition key to OFF. • Remove **SST** (adapter harness) and connect all disconnected connectors. • Connect WDS or equivalent to DLC-2. • Turn ignition key to ON (engine OFF). • Access ABS_VOLT using WDS or equivalent. • Does fail-safe relay operate?	Yes	Go to next step.
		No	Replace ABS (ABS/TCS) HU/CM, then go to next step.
4	**VERIFY TROUBLESHOOTING COMPLETED** • Clear DTC from memory. (See P–46 Clearing DTCs Procedures) • Is same DTC present?	Yes	Replace DSC HU/CM, then go to next step.
		No	Go to next step.
5	**VERIFY AFTER REPAIR PROCEDURE** • Is there any other DTC present?	Yes	Go to applicable DTC inspection.
		No	Troubleshooting completed.

DTC C1194, C1198, C1210, C1214, C1242, C1246, C1250, C1254

A6E697567650W13

DTC	**C 1210** **C 1214** **C 1194** **C 1198** **C 1246** **C 1254** **C 1242** **C 1250**	**RF pressure reduction solenoid valve** **RF pressure retention solenoid valve** **LF pressure reduction solenoid valve** **LF pressure retention solenoid valve** **RR pressure reduction solenoid valve** **RR pressure retention solenoid valve** **LR pressure reduction solenoid valve** **LR pressure reduction solenoid valve**
DETECTION CONDITION	• Solenoid monitor signal does not track in response to solenoid ON/OFF command.	
POSSIBLE CAUSE	• Open, short to power, or short to ground circuit in ABS (ABS/TCS) HU/CM • Stuck solenoid valve in ABS (ABS/TCS) HU/CM	

Diagnostic procedure

STEP	INSPECTION		ACTION
1	**VERIFY SOLENOID VALVE OPERATION** • Turn ignition key to OFF. • Remove **SST** (adapter harness) and connect all disconnected connectors. • Connect WDS or equivalent to DLC-2. • Turn ignition key to ON (engine OFF). • Access solenoid valve(s) PIDs using WDS or equivalent. • Does solenoid valve operate?	Yes	Go to next step.
		No	Repair ABS (ABS/TCS) HU/CM, then go to next step.
2	**VERIFY TROUBLESHOOTING COMPLETED** • Clear DTC from memory. (See P–46 Clearing DTCs Procedures) • Start engine and drive vehicle at **10 km/h {6.2 mph}** or above. • Gradually slow down and stop vehicle. • Is same DTC present?	Yes	Replace ABS (ABS/TCS) HU/CM, then go to next step.
		No	Go to next step.
3	**VERIFY AFTER REPAIR PROCEDURE** • Is there any other DTC present?	Yes	Go to applicable DTC inspection.
		No	Troubleshooting completed.

DTC C1414

A6E697567650W14

DTC C1414	ABS (ABS/TCS) HU/CM mismatched installation
DETECTION CONDITION	• Detection of situation where vehicle-type or drive system input signal and ABS (ABS/TCS) HU/CM information remains incongruent through CAN information.
POSSIBLE CAUSE	• Mismatched installation of ABS (ABS/TCS) HU/CM

Diagnostic procedure

STEP	INSPECTION		ACTION
1	**INSPECT ABS (ABS/TCS) UNIT FOR MISMATCHED INSTALLATION** • Verify ABS (ABS/TCS) HU/CM part number. • Has a ABS (ABS/TCS) HU/CM with the correct part number been installed?	Yes	Go to next step.
		No	Replace with correct ABS (ABS/TCS) unit part number, then go to Step 3.
2	**Configulate ABS (ABS/TCS) HU/CM** • Does ABS (ABS/TCS) HU/CM configulate properly?	Yes	Go to next step.
		No	Replace ABS (ABS/TCS) HU/CM
3	**VERIFY TROUBLESHOOTING COMPLETED** • Make sure to reconnected all disconnect connectors. • Clear DTC from memory. (See P–46 Clearing DTCs Procedures) • Is same DTC present?	Yes	Replace ABS (ABS/TCS) HU/CM, then go to next step.
		No	Go to next step.
4	**VERIFY AFTER REPAIR PROCEDURE** • Is there any other DTC present?	Yes	Go to applicable DTC inspection.
		No	Troubleshooting completed.

DTC C1508

A6E697567650W17

DTC C1508	TCS control
DETECTION CONDITION	• TCS control continues operation for **60 seconds or more**
POSSIBLE CAUSE	• System is normal For protection of solenoid valves in the ABS/TCS HU/CM, or protection of the engine, sustained and continual control of TCS is inhibited

Diagnostic procedure

STEP	INSPECTION		ACTION
1	**VERIFY CURRENT STATUS OF MALFUNCTION** • Clear DTC from memory (See P–46 Clearing DTCs Procedures) • Start engine and drive vehicle at **10 km/h {6.2 mph}** or above. • Is same DTC present?	Yes	Replace ABS/TCS HU/CM, then go to next step.
		No	Inspect intermittent concern using the same procedure as engine control system.
2	**VERIFY AFTER REPAIR PROCEDURE** • Is there any other DTC present?	Yes	Go to applicable DTC inspection.
		No	Troubleshooting completed.

DTC C1510, C1511, C1512, C1513

A6E697567650W15

DTC	C1510 C1511 C1512 C1513	**RF solenoid valve, motor or RF wheel-speed sensor/sensor rotor** **LF solenoid valve, motor or LF wheel-speed sensor/sensor rotor** **RR solenoid valve, motor or RR wheel-speed sensor/sensor rotor** **LR solenoid valve, motor or LR wheel-speed sensor/sensor rotor**
DETECTION CONDITION	• Wheel lock is detected during ABS operation (pressure reduction inoperative). • Pressure reduction on a single wheel continues for **more than 20 seconds**.	
POSSIBLE CAUSE	• Malfunction of solenoid valve in ABS (ABS/TCS) HU/CM • Malfunction of wheel-speed sensor • Damaged sensor rotor • Stuck pump motor in ABS (ABS/TCS) HU/CM	

Diagnostic procedure

STEP	INSPECTION		ACTION
1	**VERIFY OTHER DTC HAS BEEN RECORDED** • Has any ABS wheel-speed sensor, sensor rotor, solenoid valve, pump motor, or motor relay related DTC been output?	Yes	Go to applicable DTC inspection.
		No	Go to next step.
2	**INSPECT ABS (ABS/TCS) HU/CM OPERATION** • Perform ABS (ABS/TCS) HU/CM system inspection. (See P–27 ABS (ABS/TCS) HU/CM SYSTEM INSPECTION • Is it okay?	Yes	Go to next step.
		No	Replace ABS (ABS/TCS) HU/CM, then go to next step.
3	**VERIFY CURRENT STATUS OF MALFUNCTION** • Clear DTC from memory. (See P–46 Clearing DTCs Procedures) • Start engine and drive vehicle at **10 km/h {6.2 mph}** or above at least one minute. • Gradually slow down and stop vehicle. • Is same DTC present?	Yes	Replace ABS (ABS/TCS) HU/CM, then go to next step.
		No	Go to next step.
4	**VERIFY AFTER REPAIR PROCEDURE** • Is there any other DTC present?	Yes	Go to applicable DTC inspection.
		No	Troubleshooting completed.

DTC U2021

A6E697567650W16

P

Note

- To warm up the engine completely, idle the engine and wait for **more than 5 minutes**.

DTC U2021	Engine coolant temperature
DETECTION CONDITION	• After engine is warmed up, engine coolant temperature is **0 °C {32 °F}** or less, and TCS operation is inhibited by PCM.
POSSIBLE CAUSE	• System is normal. When engine coolant temperature rises, TCS operation is executed by PCM.

Diagnostic procedure

STEP	INSPECTION		ACTION
1	**CHECK WHETHER ENGINE HAS WARMED UP** • Has engine warmed up?	Yes	Go to next step.
		No	Warm up the engine. If TCS OFF light goes out, system is normal.
2	**VERIFY THAT MALFUNCTION SYMPTOM OCCURS AFTER ENGINE IS WARMED UP** • Warm up the engine. • Is TCS indicator light also illuminated and DTC C1119 obtained?	Yes	Go to DTC C1119 chart.
		No	If TCS OFF light goes out, system is normal. If TCS OFF light does not goes out, go to next step.
3	**VERIFY TROUBLESHOOTING COMPLETED** • Clear DTC from memory. (See P–46 Clearing DTCs Procedures) • Is same DTC present?	Yes	Replace ABS (ABS/TCS) HU/CM, then go to next step.
		No	Go to next step.
4	**VERIFY AFTER REPAIR PROCEDURE** • Is there any other DTC present?	Yes	Go to applicable DTC inspection.
		No	Troubleshooting completed.

ON-BOARD DIAGNOSTIC (DYNAMIC STABILITY CONTROL)

DSC SYSTEM WIRING DIAGRAM

A6E697367650W01

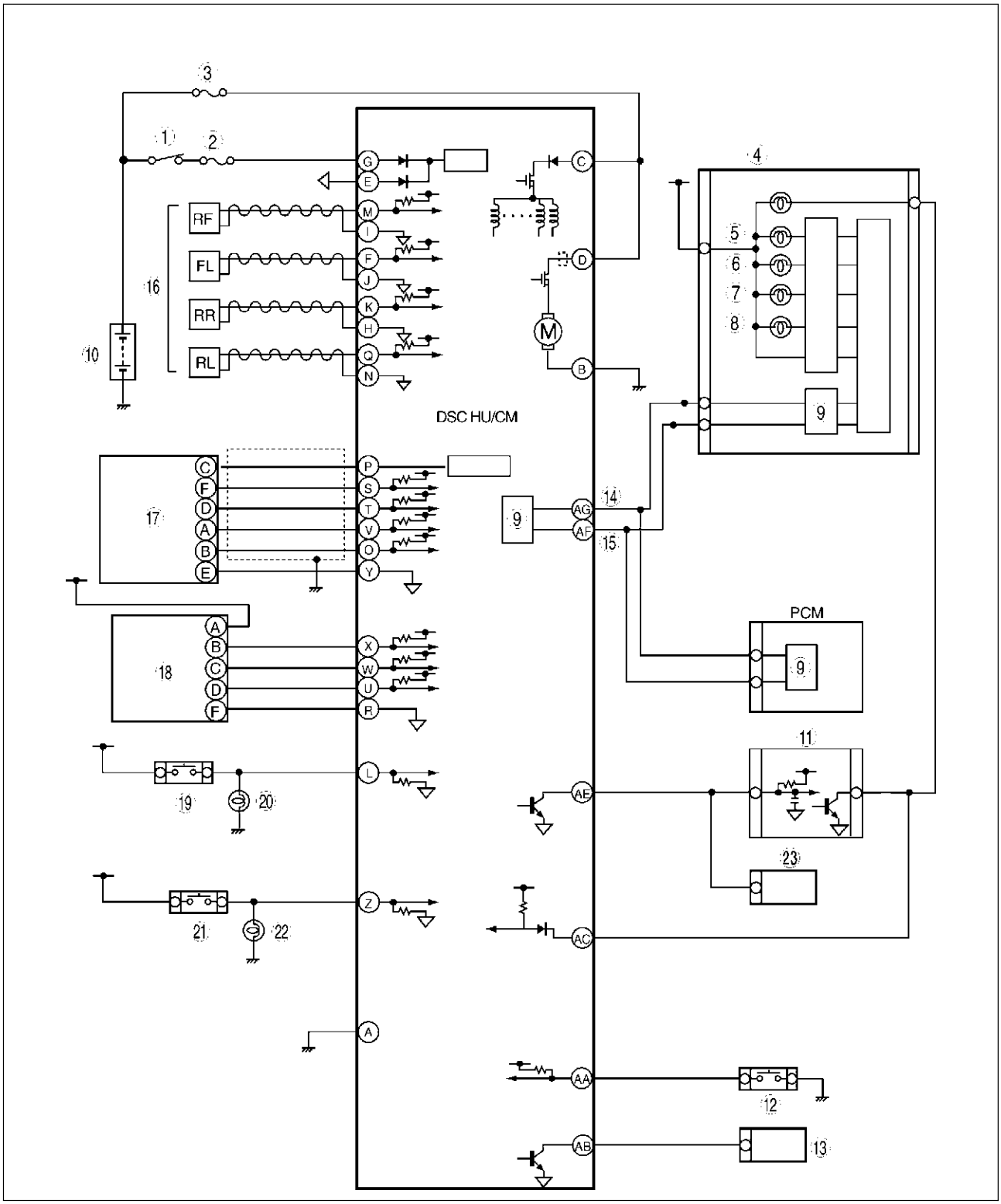

A6E6920T005

1	IG switch
2	SUS 15A fuse
3	ABS 60 A fuse

4	Meter
5	ABS warning light
6	Brake system warning light

7	DSC OFF light
8	DSC indicator light
9	CAN driver
10	Battery
11	Cruise actuator
12	DSC OFF switch
13	DLC-2
14	CAN-H
15	CAN-L

16	Wheel-speed sensor
17	Combine sensor
18	Steering angle sensor
19	Brake switch
20	Brake light
21	Back-up light switch (MTX only)
22	Back-up light
23	Audio unit, Wiper and washer switch, Car-navegation unit, Auto leveling control unit

DSC ON-BOARD DIAGNOSIS

A6E697367650W02

On-Board Diagnostic (OBD) Test Description

1. (See P–46 ABS (ABS/TCS) ON-BOARD DIAGNOSIS)

DTC Table

DTC WDS or equiva-lent	Diagnosis system component	Page
B1318	DSC power supply	(See P–72 DTC B1318)
B1342	DSC HU/CM	(See P–74 DTC B1342)
B1483	Stop switch signal	(See P–74 DTC B1483, B1484, B1486)
B1484	Stop switch signal	(See P–74 DTC B1483, B1484, B1486)
B1486	Stop switch signal	(See P–74 DTC B1483, B1484, B1486)
B1627	Reverse signal	(See P–76 DTC B1627)
B2477	Module configuration	(See P–77 DTC B2477)
C1095	Motor relay, pump motor	(See P–77 DTC C1095, C1096)
C1096	Motor relay, pump motor	(See P–77 DTC C1095, C1096)
C1119	Engine control system	(See P–79 DTC C1119)
C1125	Brake fluid level sensor	(See P–80 DTC C1125)
C1140	DSC HU (pump)	(See P–81 DTC C1140)
C1145	Right front wheel-speed sensor	(See P–81 DTC C1145, C1155, C1165, C1175)
C1148	Right front wheel-speed sensor/sensor rotor	(See P–83 DTC C1148, C1158, C1168, C1178, C1233, C1234, C1235, C1236)
C1155	Left front wheel-speed sensor	(See P–81 DTC C1145, C1155, C1165, C1175)
C1158	Left front wheel-speed sensor/sensor rotor	(See P–83 DTC C1148, C1158, C1168, C1178, C1233, C1234, C1235, C1236)
C1165	Right rear wheel-speed sensor	(See P–81 DTC C1145, C1155, C1165, C1175)
C1168	Right rear wheel-speed sensor/sensor rotor	(See P–83 DTC C1148, C1158, C1168, C1178, C1233, C1234, C1235, C1236)
C1175	Left rear wheel-speed sensor	(See P–81 DTC C1145, C1155, C1165, C1175)
C1178	Left rear wheel-speed sensor/sensor rotor	(See P–83 DTC C1148, C1158, C1168, C1178, C1233, C1234, C1235, C1236)
C1186	Fail-safe relay	(See P–86 DTC C1186, C1266)
C1194	Left front pressure reduction solenoid valve	(See P–87 DTC C1194, C1198, C1210, C1214, C1242, C1246, C1250, C1254, C1400, C1410, C1957, C1958)
C1198	Left front pressure retention solenoid valve	(See P–87 DTC C1194, C1198, C1210, C1214, C1242, C1246, C1250, C1254, C1400, C1410, C1957, C1958)
C1210	Right front pressure reduction solenoid valve	(See P–87 DTC C1194, C1198, C1210, C1214, C1242, C1246, C1250, C1254, C1400, C1410, C1957, C1958)
C1214	Right front pressure retention solenoid valve	(See P–87 DTC C1194, C1198, C1210, C1214, C1242, C1246, C1250, C1254, C1400, C1410, C1957, C1958)
C1233	Left front wheel-speed sensor/sensor rotor	(See P–83 DTC C1148, C1158, C1168, C1178, C1233, C1234, C1235, C1236)

DTC WDS or equiva-lent	Diagnosis system component	Page
C1234	Right front wheel-speed sensor/sensor rotor	(See P–83 DTC C1148, C1158, C1168, C1178, C1233, C1234, C1235, C1236)
C1235	Right rear wheel-speed sensor/sensor rotor	(See P–83 DTC C1148, C1158, C1168, C1178, C1233, C1234, C1235, C1236)
C1236	Left rear wheel-speed sensor/sensor rotor	(See P–83 DTC C1148, C1158, C1168, C1178, C1233, C1234, C1235, C1236)
C1242	Left rear pressure reduction solenoid valve	(See P–87 DTC C1194, C1198, C1210, C1214, C1242, C1246, C1250, C1254, C1400, C1410, C1957, C1958)
C1246	Right rear pressure reduction solenoid valve	(See P–87 DTC C1194, C1198, C1210, C1214, C1242, C1246, C1250, C1254, C1400, C1410, C1957, C1958)
C1250	Left rear pressure retention solenoid valve	(See P–87 DTC C1194, C1198, C1210, C1214, C1242, C1246, C1250, C1254, C1400, C1410, C1957, C1958)
C1254	Right rear ABS pressure retention solenoid valve	(See P–87 DTC C1194, C1198, C1210, C1214, C1242, C1246, C1250, C1254, C1400, C1410, C1957, C1958)
C1266	Fail-safe relay	(See P–86 DTC C1186, C1266)
C1280	Combine sensor	(See P–88 DTC C1280, C1730, C1951, C1952, C1959)
C1400	Right front traction switch solenoid valve	(See P–87 DTC C1194, C1198, C1210, C1214, C1242, C1246, C1250, C1254, C1400, C1410, C1957, C1958)
C1410	Left front traction switch solenoid valve	(See P–87 DTC C1194, C1198, C1210, C1214, C1242, C1246, C1250, C1254, C1400, C1410, C1957, C1958)
C1414	DSC HU/CM	(See P–91 DTC C1414)
C1507	DSC control	(See P–91 DTC C1507, C1508)
C1508	DSC control	(See P–91 DTC C1507, C1508)
C1510	Right front solenoid valve, motor or wheel-speed sensor/sensor rotor	(See P–92 DTC C1510, C1511, C1512, C1513)
C1511	Left front solenoid valve, motor or wheel-speed sensor/ sensor rotor	(See P–92 DTC C1510, C1511, C1512, C1513)
C1512	Right rear solenoid valve, motor or wheel-speed sensor/sensor rotor	(See P–92 DTC C1510, C1511, C1512, C1513)
C1513	Left rear solenoid valve, motor or wheel-speed sensor/ sensor rotor	(See P–92 DTC C1510, C1511, C1512, C1513)
C1730	Combine sensor	(See P–88 DTC C1280, C1730, C1951, C1952, C1959)
C1951	Combine sensor	(See P–88 DTC C1280, C1730, C1951, C1952, C1959)
C1952	Combine sensor	(See P–88 DTC C1280, C1730, C1951, C1952, C1959)
C1953	Brake fluid pressure sensor	(See P–92 DTC C1953, C1954)
C1954	Brake fluid pressure sensor	(See P–92 DTC C1953, C1954)
C1955	Steering angle sensor	(See P–93 DTC C1955, C1956)
C1956	Steering angle sensor	(See P–93 DTC C1955, C1956)
C1957	Right front DSC switch solenoid valve	(See P–87 DTC C1194, C1198, C1210, C1214, C1242, C1246, C1250, C1254, C1400, C1410, C1957, C1958)
C1958	Left front DSC switch solenoid valve	(See P–87 DTC C1194, C1198, C1210, C1214, C1242, C1246, C1250, C1254, C1400, C1410, C1957, C1958)
C1959	Combine sensor	(See P–88 DTC C1280, C1730, C1951, C1952, C1959)
U1900	Can communication	(See T–144 DTC U0073, U1900, U2516)
U2021	Invalid/fault data received	(See P–96 DTC U2021)

DTC WDS or equiva-lent	Diagnosis system component	Page
U2516	Can communication	(See T–144 DTC U0073, U1900, U2516)

PID/DATA Monitor Table

PID Name (Definition)	Unit/Condition	Condition/Specification	Action	ABS/TCS HU/CM or DSC HU/CM terminal
RPM (Engine speed signal input)	RPM	• Engine is stopped: 0 RPM • Engine is running: Indicates engine speed	Inspect PCM.	—
TRANSGR (Transaxle gear position)	1/2/3/4/P/R/N	• Selector lever position is displayed **ATX** — D range (1GR): 1 — D range (2GR): 2 — D range (3GR): 3 — D range (4GR): 4 — P position: P — N position: N — R position: R **MTX** — 1GR: 1 — 2GR: 2 — 3GR: 3 — 4GR: 4 — 5GR: 5 — Neutral: N — Reverse: R	Inspect PCM, TR switch, or DSC HU/CM.	—
TRAC_SW (TCS OFF switch input)	ON/OFF	• TCS (DSC) OFF switch is depressed: ON • TCS(DSC) OFF switch is released: OFF	Inspect TCS(DSC) OFF switch.	AA
TC LVAL (Traction switch solenoid valve (LF-RR))	ON/OFF	• Solenoid valve is activated: ON • Solenoid valve is deactivated: OFF	Internal fault of DSC HU/CM. Replace DSC HU/CM. (See P–38 DSC HU/CM REMOVAL/INSTALLATION)	—
TC RVAL (Traction switch solenoid valve (RF-LR))	ON/OFF	• Solenoid valve is activated: ON • Solenoid valve is deactivated: OFF	Internal fault of DSC HU/CM. Replace DSC HU/CM. (See P–38 DSC HU/CM REMOVAL/INSTALLATION)	—
L_DSC O (Stability control solenoid valve (LF-RR))	ON/OFF	• Solenoid valve is activated: ON • Solenoid valve is deactivated: OFF	Internal fault of DSC HU/CM. Replace DSC HU/CM. (See P–38 DSC HU/CM REMOVAL/INSTALLATION)	—
R_DSC O (Stability control solenoid valve (RF-LR))	ON/OFF	• Solenoid valve is activated: ON • Solenoid valve is deactivated: OFF	Internal fault of DSC HU/CM. Replace DSC HU/CM. (See P–38 DSC HU/CM REMOVAL/INSTALLATION)	—
CCNTABS (Number of continuous codes)	—	DTC is detected: 1—255 DTC is not detected: 0	Perform inspection using appropriate DTC.	—
PMPSTAT (Pump motor output state)	ON/OFF	• Pump motor is activated: ON • Pump motor is deactivated: OFF	Inspect DSC HU/CM. (See P–40 DSC HU/CM INSPECTION)	—
BRK_FLUID (Brake fluid level sensor input)	YES/NO	• Brake fluid is above LOW: YES • Brake fluid is below LOW: NO	Inspect brake fluid level. Inspect brake fluid level sensor.	—

P

PID Name (Definition)	Unit/Condition	Condition/Specification	Action	ABS/TCS HU/ CM or DSC HU/ CM terminal
BOO_ABS (Brake pedal switch input)	ON/OFF	• Brake pedal is depressed: ON • Brake pedal is released: OFF	Inspect brake switch.	L
ABS_LAMP (ABS warning light driver output state)	ON/OFF	• ABS warning light is illuminated: ON • ABS warning light is not illuminated: OFF	Inspect ABS warning light.	—
BRAKE_LMP (BRAKE system warning light output state)	ON/OFF	• BRAKE system warning light is illuminated: ON • BRAKE system warning light is not illuminated: OFF	Inspect BRAKE system warning light.	—
ABSRR_O (Right rear ABS pressure reduction solenoid valve output state)	ON/OFF	• During ABS control: ON/ OFF (solenoid valve is activated/deactivated) • Not ABS control: OFF • (solenoid valve is deactivated)	Internal fault of DSC HU/ CM. Replace DSC HU/CM. (See P–38 DSC HU/CM REMOVAL/ INSTALLATION)	—
ABSLR_O (Left rear ABS pressure reduction solenoid valve output state)	ON/OFF	• During ABS or EBD control: ON/OFF (solenoid valve is activated/deactivated) • Not ABS and EBD control: OFF (solenoid valve is deactivated)	Internal fault of DSC HU/ CM. Replace DSC HU/CM. (See P–38 DSC HU/CM REMOVAL/ INSTALLATION)	—
ABSRF_O (Right front ABS pressure reduction solenoid valve output state)	ON/OFF	• During ABS control: ON/ OFF (solenoid valve is activated/deactivated) • Not ABS control: OFF (solenoid valve is deactivated)	Internal fault of DSC HU/ CM. Replace DSC HU/CM. (See P–38 DSC HU/CM REMOVAL/ INSTALLATION)	—
ABSLF_O (Left front ABS pressure reduction solenoid valve output state)	ON/OFF	• During ABS control: ON/ OFF(solenoid valve is activated/deactivated) • Not ABS control: OFF (solenoid valve is deactivated)	Internal fault of DSC HU/ CM. Replace DSC HU/CM. (See P–38 DSC HU/CM REMOVAL/ INSTALLATION)	—
ABSRR_I (Right rear ABS pressure reduction solenoid valve output state)	ON/OFF	• During ABS control: ON/ OFF (solenoid valve is activated/deactivated) • Not ABS control: OFF (solenoid valve is deactivated)	Internal fault of DSC HU/ CM. Replace DSC HU/CM. (See P–38 DSC HU/CM REMOVAL/ INSTALLATION)	—
ABSLR_I (Left rear ABS pressure retention solenoid valve output state)	ON/OFF	• During ABS or EBD control: ON/OFF (solenoid valve is activated/deactivated) • Not ABS and EBD control: OFF (solenoid valve is deactivated)	Internal fault of DSC HU/ CM. Replace DSC HU/CM. (See P–38 DSC HU/CM REMOVAL/ INSTALLATION)	—
ABSRF_I (Right front ABS pressure retention solenoid valve output state)	ON/OFF	• During ABS control: ON/ OFF (solenoid valve is activated/deactivated) • Not ABS control: OFF (solenoid valve is deactivated)	Internal fault of DSC HU/ CM. Replace DSC HU/CM. (See P–38 DSC HU/CM REMOVAL/ INSTALLATION)	—
ABSLF_I (Left front ABS pressure retention solenoid valve output state)	ON/OFF	• During ABS control: ON/ OFF (solenoid valve is activated/deactivated) • Not ABS control: OFF (solenoid valve is deactivated)	Internal fault of DSC HU/ CM. Replace DSC HU/CM. (See P–38 DSC HU/CM REMOVAL/ INSTALLATION)	—

PID Name (Definition)	Unit/Condition	Condition/Specification	Action	ABS/TCS HU/CM or DSC HU/CM terminal
ABSVLVRLY (Fail-safe relay output state)	ON/OFF	• Fail-safe relay is activated: ON • Fail-safe relay is deactivated: OFF	Inspect DSC HU/CM. (See P–40 DSC HU/CM INSPECTION)	—
ABSPMPRLY (Motor relay output state)	ON/OFF	• Motor relay is activated: ON • Motor relay is deactivated: OFF	Inspect DSC HU/CM. (See P–40 DSC HU/CM INSPECTION)	—
SWA POS (Steering angle sensor input)	DEG	• Steering wheel is in neutral position: **0 DEG** • Steering wheel is turned to left: Changes between **0 DEG and -1,638.40 DEG** • Steering wheel is turned to right: Changes between **0 DEG and 1,638.35 DEG**	Inspect steering angle sensor.	R, U, W, X
LF_WSPD (Left front wheel-speed sensor input)	KPH or MPH	• Vehicle is stopped: 0 KPH {0 MPH} • Vehicle is driving: Indicates vehicle speed	Inspect wheel-speed sensor/sensor rotor.	F, J
RF_WSPD (Right front wheel-speed sensor input)	KPH or MPH	• Vehicle is stopped: **0 KPH {0 MPH}** • Vehicle is driving: Indicates vehicle speed	Inspect wheel-speed sensor/sensor rotor.	I, M
LR_WSPD (Left rear wheel-speed sensor input)	KPH or MPH	• Vehicle is stopped: **0 KPH {0 MPH}** • Vehicle is driving: Indicates vehicle speed	Inspect wheel-speed sensor/sensor rotor.	N, Q
RR_WSPD (Right rear wheel-speed sensor input)	KPH or MPH	• Vehicle is stopped: **0 KPH {0 MPH}** • Vehicle is driving: Indicates vehicle speed	Inspect wheel-speed sensor/sensor rotor.	H, K
LAT ACC (Lateral-G sensor input)	G	• Vehicle is stopped or driving straight: 0 G • Cornering to left: Changes between **0 G and 1.27 G** • Cornering to right: Changes between **0 G and -1.28 G**	Inspect ABS wheel-speed sensor/sensor rotor.	O
YAW_RATE (Yaw rate sensor input)	DG/S	• Vehicle is stopped or driving straight: 0 DG/S • Cornering to left: Changes between **0 DG/S and 127 DG/S** • Cornering to right: Changes between **0 DG/S and -128 DG/S**	Inspect combine sensor. (See P–43 COMBINE SENSOR INSPECTION)	T
MCYLI P (Brake fluid pressure sensor input)	MPA	• Brake pedal is released: 0 MPA • Brake pedal is depressed: Changes between **0 MPA and 25.5 MPA**	Inspect DSC HU/CM. (See P–40 DSC HU/CM INSPECTION)	—
TCSOUTD (Torque reduction request value)	%	• Torque reduction is not requested: 0 % • Torque reduction is requested: Changes between **0 % and 100** %	Inspect DSC HU/CM. (See P–40 DSC HU/CM INSPECTION)	—
TPI (Throttle position signal input)	—	• Closed throttle position: 0 • Wide open throttle: Changes between 1 and 7	Inspect PCM and throttle position sensor.	—
ABS_VOLT (System battery voltage value)	V	• Ignition key at ON: **B+** • Idle: **Approx. 14—16 V**	Inspect power supply circuit. (See P–40 DSC HU/CM INSPECTION)	G

Active Command Modes Table

Command Name	Definition	Operation	Note
RF_DSC_V	Stability control solenoid valve (RF-LR)	ON/OFF	Ignition key at ON (Engine OFF), and driving
LF_DSC_V	Stability control solenoid valve (LF-RR)	ON/OFF	
ABS_POWER	Fail-safe relay	ON/OFF	
LR_OUTLET	Left rear ABS pressure reduction solenoid valve	ON/OFF	
LR_INLET	Left rear ABS pressure retention solenoid valve	ON/OFF	
RR_INLET	Right rear ABS pressure retention solenoid valve	ON/OFF	
RR_OUTLET	Right rear ABS pressure reduction solenoid valve	ON/OFF	
LF_INLET	Left front ABS pressure retention solenoid valve	ON/OFF	
LF_OUTLET	Left front ABS pressure reduction solenoid valve	ON/OFF	
RF_INLET	Right front ABS pressure retention solenoid valve	ON/OFF	
RF_OUTLET	Right front ABS pressure reduction solenoid valve	ON/OFF	
PMP_MOTOR	ABS motor	ON/OFF	
RF_TC_VLV	Traction switch solenoid valve (RF-LR)	ON/OFF	
LF_TC_VLV	Traction switch solenoid valve (LF-RR)	ON/OFF	
TRAC OFF	Traction control off indicator	ON/OFF	
STAB_IND	DSC indicator light	ON/OFF	
YAWRATE	Yaw rate sensor initialization start	ON/OFF	
LATACCEL	Lateral accel sensor initialization start	TRUE/FALSE	

DTC B1318

A6E697367650W03

Caution

- **When attaching the tester lead to the DSC HU/CM connector the SST (49 G066 004) must be used.**

DTC B1318	DSC power supply
DETECTION CONDITION	• Low voltage is detected at the voltage monitor of solenoid valve monitor, or the motor monitor.
POSSIBLE CAUSE	• Malfunction of fuse (SUS 15 A) • Open or short to power circuit in harness between DSC HU/CM terminal G and battery positive terminal • Open circuit in harness between body ground and DSC HU/CM terminal A • Battery and/or generator malfunction

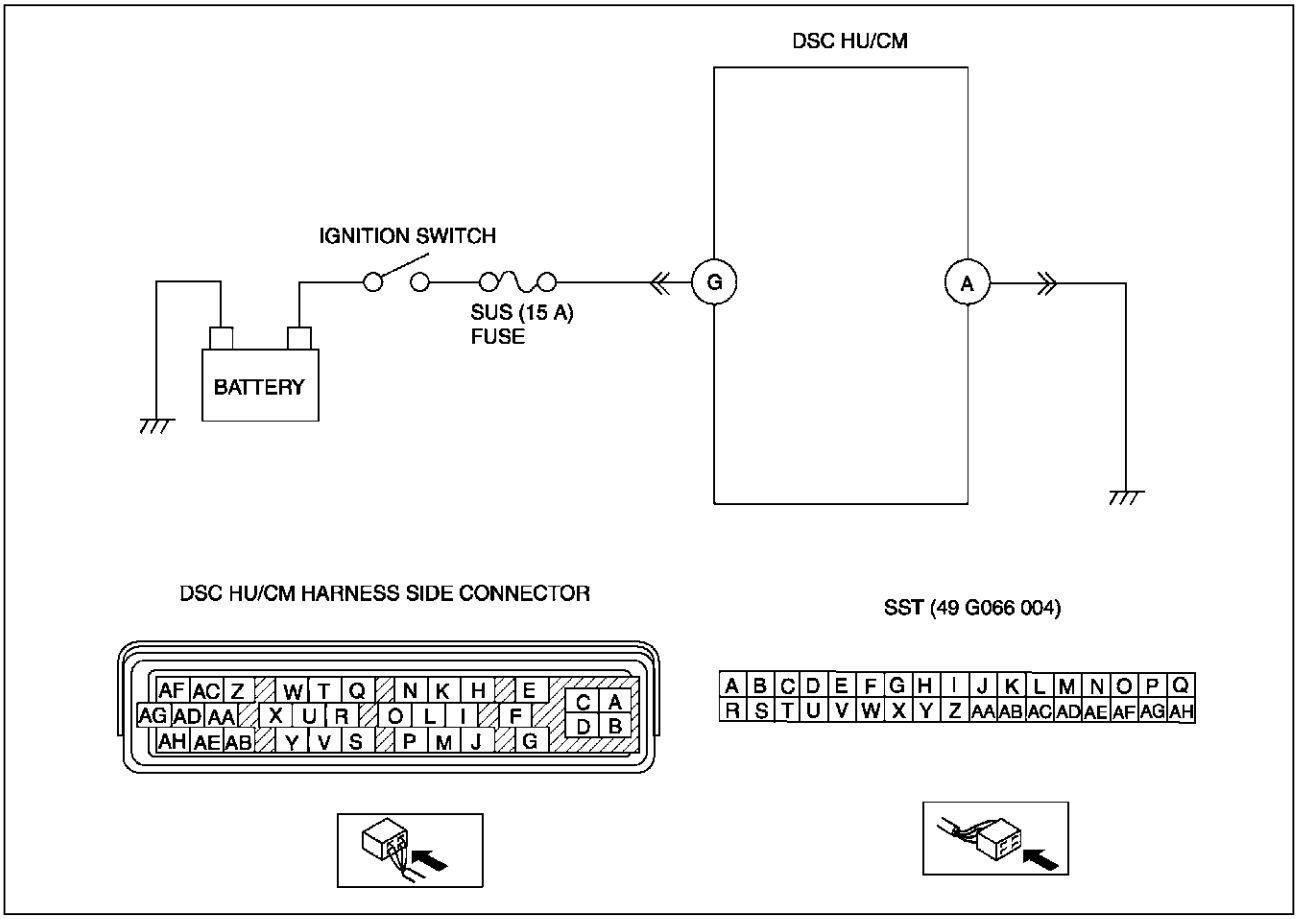

Diagnostic procedure

STEP	INSPECTION		ACTION
1	**INSPECT BATTERY VOLTAGE** • Is battery terminal voltage okay?	Yes	Make sure that battery terminal connection is okay. Go to next step.
		No	Charge or replace battery, then go to Step 6.
2	**INSPECT BATTERY GRAVITY** • Is battery specific gravity as specified?	Yes	Go to next step.
		No	Replace battery, then go to Step 6.
3	**INSPECT CHARGING SYSTEM** • Are generator and drive belt tension okay?	Yes	Go to next step.
		No	Adjust drive belt tension as necessary. Replace generator and/or drive belt as necessary.
4	**INSPECT DSC HU/CM POWER SUPPLY CIRCUIT FOR OPEN CIRCUIT** • Start engine. • Measure voltage between DSC HU/CM terminal G and ground. • Is voltage **above 10 V**?	Yes	Go to next step.
		No	Go to Step 6.
5	**INSPECT DSC HU/CM GROUND CIRCUIT FOR POOR GROUND OR OPEN CIRCUIT** • Turn ignition key to OFF. • Measure resistance between ground and DSC HU/CM terminal A. • Is resistance **within 0—1 ohm**?	Yes	Go to next step.
		No	If there is no continuity: • Repair or replace harness for open circuit between DSC HU/CM and ground, then go to next step. If resistance is not **within 0—1 ohm**: • Repair or replace harness for poor ground, then go to next step.
6	**VERIFY TROUBLESHOOTING COMPLETED** • Make sure to reconnect all disconnected connectors. • Clear DTC from memory. (See P–46 Clearing DTCs Procedures) • Is same DTC present?	Yes	Replace DSC HU/CM, then go to next step.
		No	Go to next step.
7	**VERIFY AFTER REPAIR PROCEDURE** • Is there any other DTC present?	Yes	Go to applicable DTC inspection.
		No	Troubleshooting completed.

DTC B1342

A6E697367650W04

Caution

- **When attaching the tester lead to the DSC HU/CM connector the SST (49 G066 004) must be used.**

DTC B1342	DSC HU/CM
DETECTION CONDITION	The on-board diagnostic function detects control module malfunction.
POSSIBLE CAUSE	• Malfunction of DSC HU/CM

Diagnostic procedure

STEP	INSPECTION		ACTION
1	**VERIFY CURRENT STATUS OF MALFUNCTION** • Clear DTC from memory. (See P–46 Clearing DTCs Procedures) • Start engine and drive vehicle at **10 km/h {6.2 mph}** or above. • Is same DTC present?	Yes	Replace DSC HU/CM, then go to next step.
		No	Inspect intermittent concern using the same procedure as engine control system.
2	**VERIFY AFTER REPAIR PROCEDURE** • Is there any other DTC present?	Yes	Go to applicable DTC inspection.
		No	Troubleshooting completed.

DTC B1483, B1484, B1486

A6E697367650W05

Caution

- **When attaching the tester lead to the DSC HU/CM connector the SST (49 G066 004) must be used.**

DTC B1483, B1484, B1486	Brake switch signal
DETECTION CONDITION	• Low voltage is detected at the voltage monitor of solenoid valve monitor, or the motor monitor
POSSIBLE CAUSE	• B1483 — Malfunction of brake switch • B1484 — Open circuit in harness between DSC HU/CM terminal I and brake switch • B1486 — Short to ground circuit in harness between DSC HU/CM terminal I and brake switch • Short to power circuit in harness between DSC HU/CM terminal I and brake switch

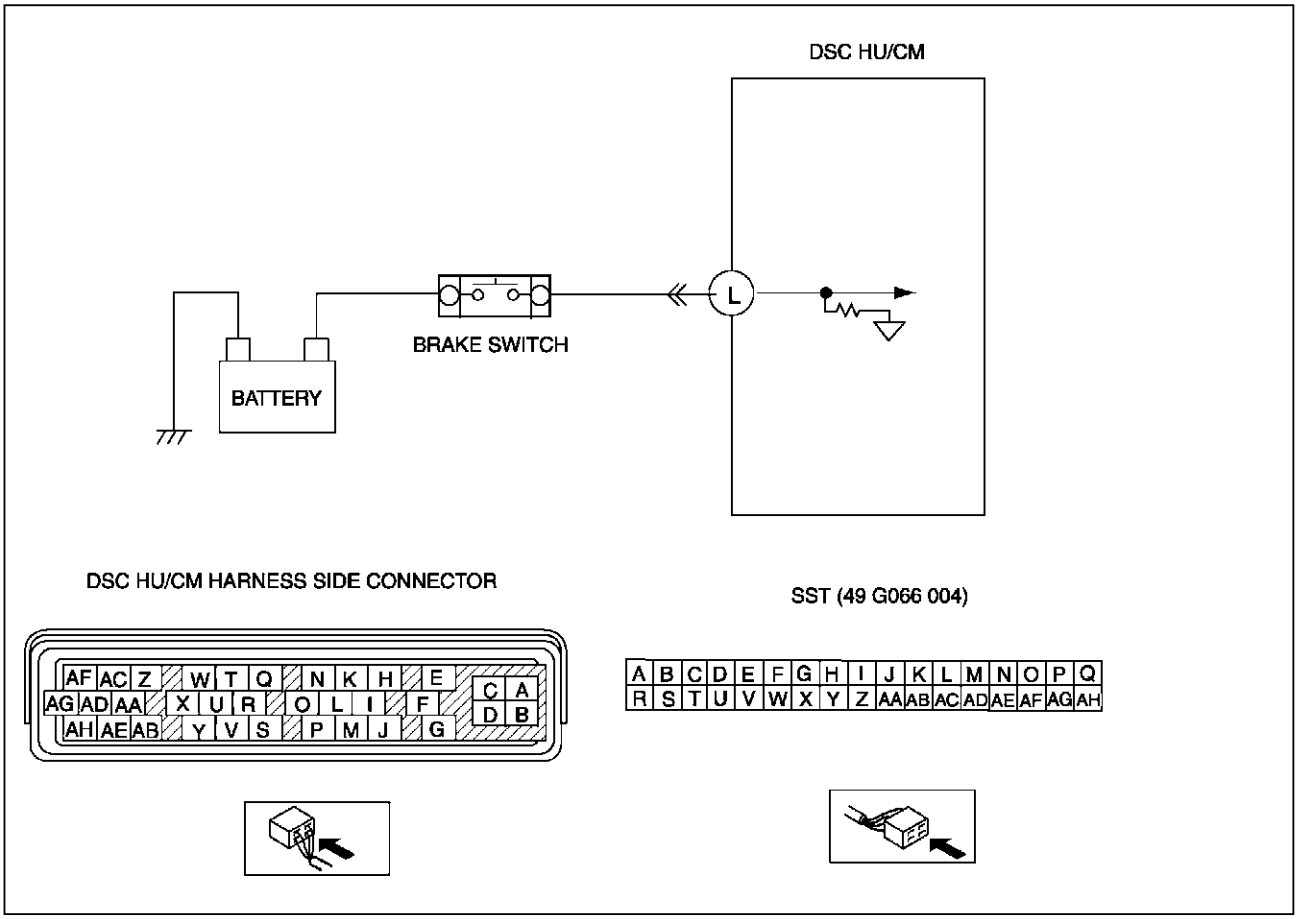

P

Diagnostic procedure

STEP	INSPECTION		ACTION
1	**INSPECT DSC HU/CM TO BRAKE SWITCH FOR OPEN CIRCUIT** • Turn ignition key to OFF. • Disconnect DSC HU/CM and brake switch connector • Inspect continuity DSC HU/CM terminal L and brake switch • Is there continuity?	Yes	Go to next step.
		No	Repair or replace harness for open circuit between DSC HU/CM and brake switch, then go to next step.
2	**INSPECT DSC HU/CM TO BRAKE SWITCH FOR SHORT TO GROUND** • Turn ignition key to OFF. • Inspect continuity DSC HU/CM terminal L and ground • Is there continuity?	Yes	Repair or replace harness for open circuit between DSC HU/CM and brake switch, then go to next step.
		No	Go to next step.
3	**INSPECT BRAKE SWITCH** • Inspect bake switch. • Is it okay?	Yes	Go to next step.
		No	Replace bake switch, then go to next step.
4	**VERIFY TROUBLESHOOTING COMPLETED** • Make sure to reconnect all disconnected connectors. • Clear DTC from memory. (See P–46 Clearing DTCs Procedures) • Is same DTC present?	Yes	Replace bake switch, then go to next step.
		No	Go to next step.
5	**VERIFY AFTER REPAIR PROCEDURE** • Is there any other DTC present?	Yes	Go to applicable DTC inspection.
		No	Troubleshooting completed.

DTC B1627

A6E697367650W06

Caution

- **When attaching the tester lead to the DSC HU/CM connector the SST (49 G066 004) must be used.**

DTC B1627	Reverse signal
DETECTION CONDITION	• Reverse signal is input for **10 seconds or more** while driving at a vehicle speed of **65 km/h {40.3 mph}**.
POSSIBLE CAUSE	• Short to power circuit in harness between DSC HU/CM terminal Z and back-up light switch (MTX) • Malfunction of TR switch (ATX) or back-up light switch (MTX)

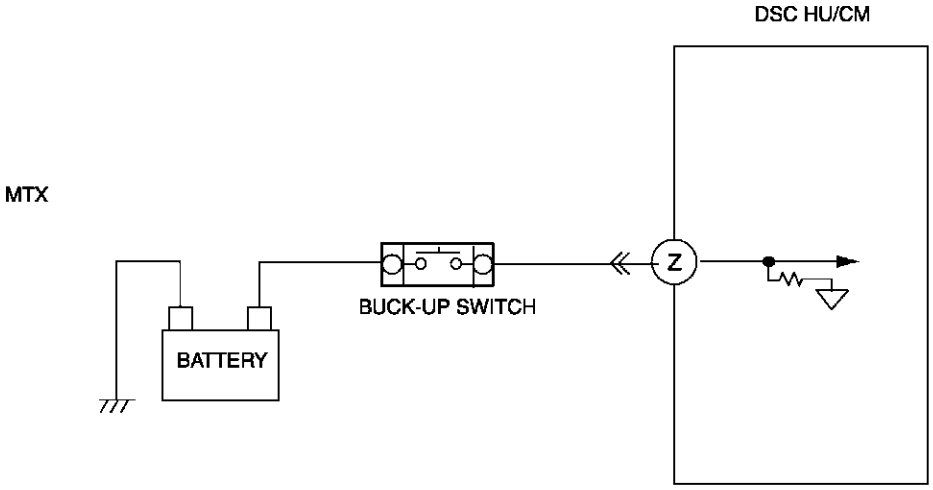

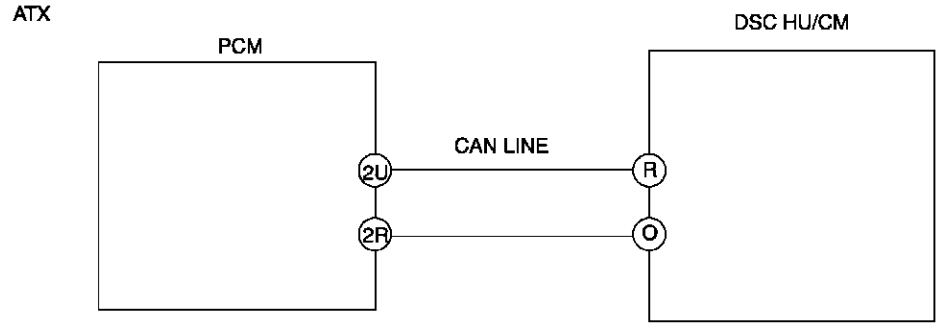

DSC HU/CM HARNESS SIDE CONNECTOR

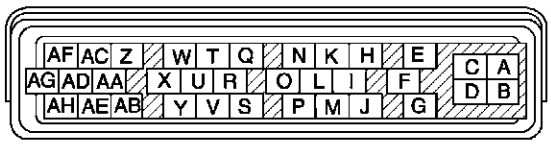

SST (49 G066 004)

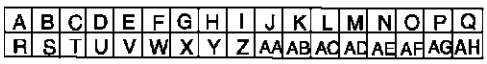

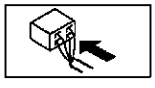

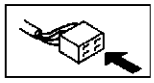

PCM HARNESS SIDE CONNECTOR

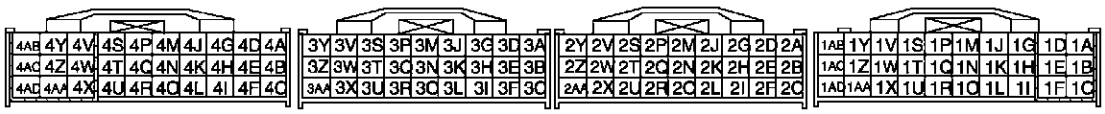

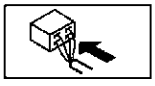

Diagnostic procedure

STEP	INSPECTION		ACTION
1	**CHECK TR SWITCH FOR DTCs (ATX)** • Turn ignition key to OFF. • Connect WDS or equivalent to DLC-2. • Turn ignition key to ON (engine OFF). • Is DTC for TR switch obtained?	Yes	Follow inspection procedures for TR switch.
		No	Go to step 4.
2	**INSPECT BACK-UP LIGHT SWITCH (MTX)** • Inspect back-up light switch. • Is it okay?	Yes	Go to next step.
		No	Replace back-up light switch, then go to next step.
3	**INSPECT REVERSE SIGNAL CIRCUIT FOR SHORT TO POWER (MTX)** • Shift select lever to neutral position. • Turn ignition key to ON. • Measure voltage between DSC HU/CM terminal Z and ground. • Is voltage **above 10 V**?	Yes	Go to next step.
		No	Replace back-up light switch, then go to next step. Replace reverse signal circuit, then go to next step.
4	**VERIFY TROUBLESHOOTING COMPLETED** • Clear DTC from memory. (See P–46 Clearing DTCs Procedures) • Is same DTC present?	Yes	Replace DSC HU/CM, then go to next step.
		No	Go to next step.
5	**VERIFY AFTER REPAIR PROCEDURE** • Is there any other DTC present?	Yes	Go to applicable DTC inspection.
		No	Troubleshooting completed.

DTC B2477

A6E697367650W07

P

DTC B2477	Module configuration
DETECTION CONDITION	• Configuration write failure is detected.
POSSIBLE CAUSE	• Module configuration procedure is not done properly.

Diagnostic procedure

STEP	INSPECTION		ACTION
1	**CHECK WHETHER DSC HU/CM IS CONFIGURED** • Is DSC HU/CM configured?	Yes	Go to next step.
		No	Configurate DSC using WDS or equivalent. (See P–29 ABS (ABS/TCS) or DSC HU/CM CONFIGURATION)
2	**VERIFY TROUBLESHOOTING COMPLETED** • Clear DTC from memory. (See P–46 Clearing DTCs Procedures) • Is same DTC present?	Yes	Replace DSC HU/CM, then go to next step.
		No	Go to next step.
3	**VERIFY AFTER REPAIR PROCEDURE** • Is there any other DTC present?	Yes	Go to applicable DTC inspection.
		No	Troubleshooting completed.

DTC C1095, C1096

A6E697367650W08

Caution

- **When attaching the tester lead to the DSC HU/CM connector the SST (49 G066 004) must be used.**

DTC C1095, C1096	Motor relay, pump motor
DETECTION CONDITION	• C1095 (54): — No motor monitor signal congruency is detected in relation to DSC HU/CM ON signal. • C1096 (53): — No motor monitor signal congruency is detected in relation to DSC HU/CM OFF signal. — Motor monitor ON signal is not input after specified time when the motor signal is switched from ON to OFF by DSC HU/CM.
POSSIBLE CAUSE	• Malfunction of fuse (ABS 60 A) • Open circuit in harness between DSC HU/CM terminal D and battery positive terminal • Open circuit in harness between DSC HU/CM terminal B and body ground • Open or short of motor relay and/or pump motor in DSC HU/CM • Stuck motor relay and/or pump motor in DSC HU/CM

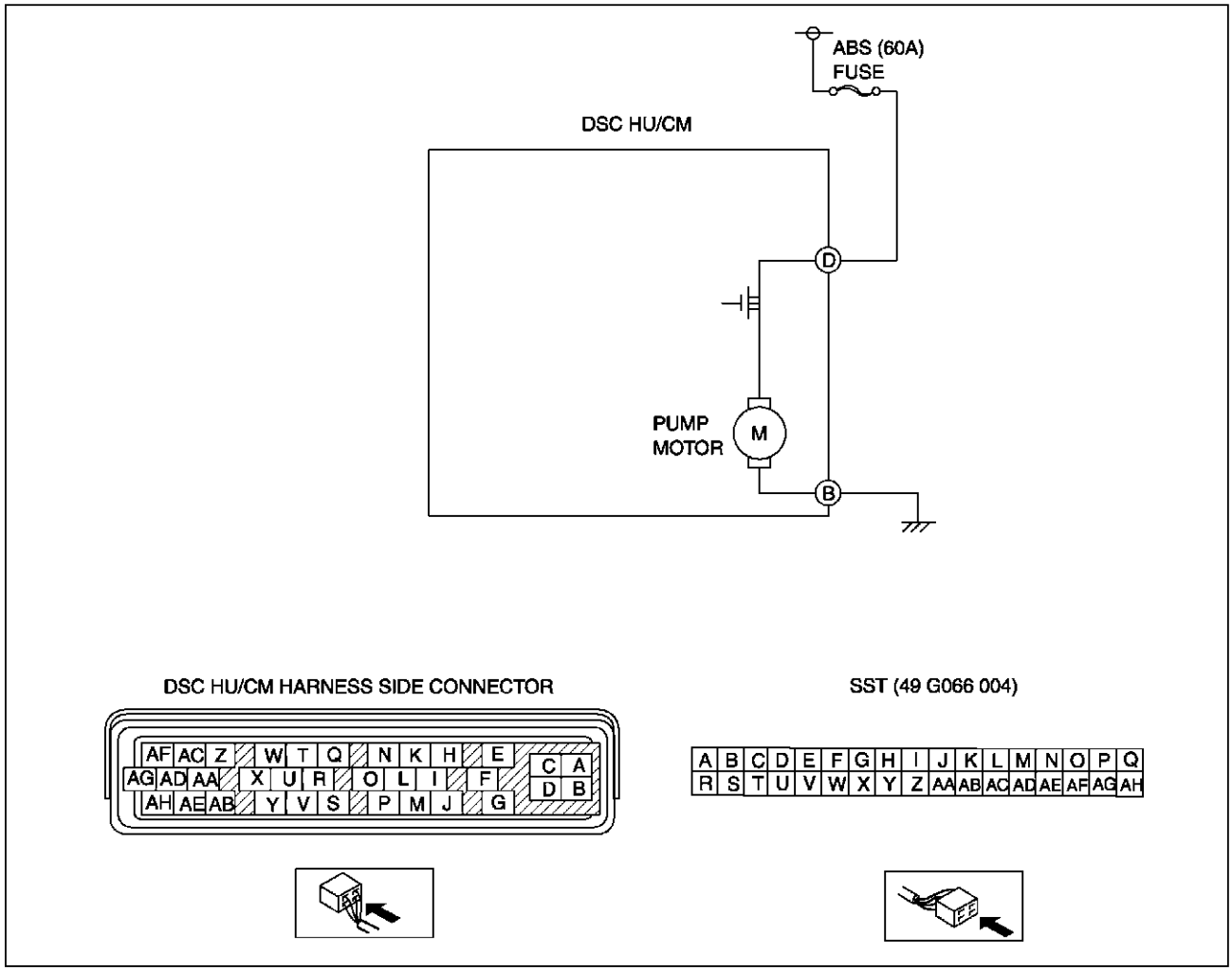

Diagnostic procedure

STEP	INSPECTION		ACTION
1	**VERIFY OTHER DTC HAS BEEN RECORDED** • If any of DTC C1186 and/or C1266 has also been stored?	Yes	Go to applicable DTC inspection.
		No	Go to next step.
2	**INSPECT ABS FUSE CONDITION** • Is ABS fuse (60 A) okay?	Yes	Go to next step.
		No	Replace fuse, then go to Step 6.
3	**INSPECT MOTOR RELAY POWER SUPPLY CIRCUIT FOR OPEN CIRCUIT** • Turn ignition key to OFF. • Disconnect DSC HU/CM connector. • Connect **SST** (adapter harness) to DSC HU/CM connector (harness side only). • Turn ignition key to ON (engine OFF). • Measure voltage between DSC HU/CM terminal D (harness side) of **SST** and ground. • Is voltage **B+**?	Yes	Go to next step.
		No	Repair or replace harness for open circuit between battery positive terminal and DSC HU/CM terminal D, then go to Step 9.
4	**INSPECT PUMP MOTOR GROUND CIRCUIT FOR OPEN CIRCUIT** • Turn ignition key to OFF. • Inspect continuity between DSC HU/CM terminal B (harness side) of **SST** and ground. • Is there continuity?	Yes	Go to next step.
		No	Repair or replace harness for open circuit between DSC HU/CM terminal B and ground, then go to Step 6.

STEP	INSPECTION		ACTION
5	**VERIFY PUMP MOTOR OPERATION** • Turn ignition key to OFF. • Remove **SST** (adapter harness) and connect all disconnected connectors. • Connect WDS or equivalent to DLC-2. • Turn ignition key to ON (engine OFF). • Access ABS_POWER and PMP_MOTOR active command modes using WDS or equivalent. • Does pump motor operate?	Yes	Go to next step.
		No	Repair DSC HU/CM, then go to next step.
6	**VERIFY TROUBLESHOOTING COMPLETED** • Clear DTC from memory. (See P–46 Clearing DTCs Procedures) • Start engine and drive vehicle at **10 km/h {6.2 mph}** or above. • Gradually slow down and stop vehicle. • Is same DTC present?	Yes	Replace DSC HU/CM, then go to next step.
		No	Go to next step.
7	**VERIFY AFTER REPAIR PROCEDURE** • Is there any other DTC present?	Yes	Go to applicable DTC inspection.
		No	Troubleshooting completed.

DTC C1119

A6E697367650W09

DTC C1119	**Engine control system, torque reduction inhibit signal line**
DETECTION CONDITION	• Engine RPM information through CAN is out of specification. • Throttle information through CAN is out of specification.
POSSIBLE CAUSE	• Malfunction of PCM • Malfunction of CAN

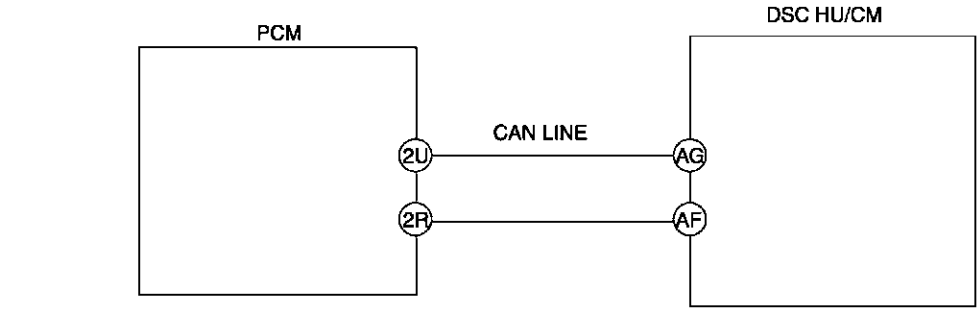

DSC HU/CM HARNESS SIDE CONNECTOR

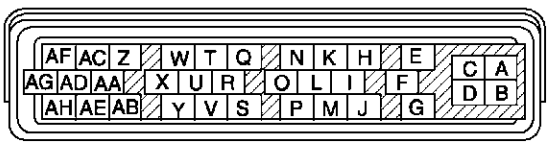

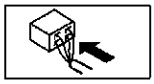

SST (49 G066 004)

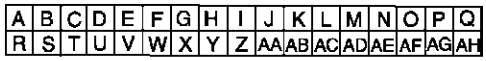

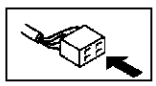

PCM HARNESS SIDE CONNECTOR

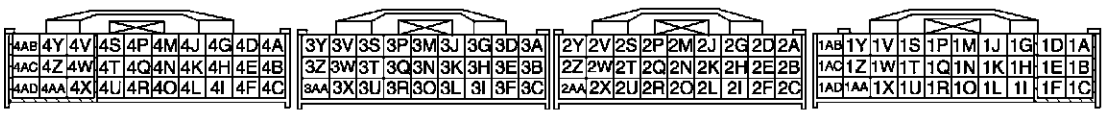

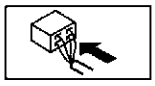

Diagnostic procedure

STEP	INSPECTION		ACTION
1	**CHECK FOR PCM FOR DTCs** • Turn ignition key to OFF. • Connect WDS or equivalent to DLC-2 • Turn ignition key to ON (engine OFF). • Is DTC for engine control system obtained?	Yes	Follow inspection procedures for engine control system.
		No	Go to next step.
2	**MONITOR CAN SIGNAL** • Access PID RPM and TP using WDS or equivalentl. • Are engine speed and throttle position within specification?	Yes	Go to next step.
		No	Follow inspection procedures for engine control system.
3	**VERIFY TROUBLESHOOTING COMPLETED** • Make sure to reconnect all disconnected connectors. • Clear DTC from memory. (See P–46 Clearing DTCs Procedures) • Start engine. • Is same DTC present?	Yes	Replace DSC HU/CM, then go to next step.
		No	Go to next step.

DTC C1125

A6E697367650W10

DTC C1125	Brake fluid level sensor
DETECTION CONDITION	• Brake fluid level remains low for **5 seconds or more**.
POSSIBLE CAUSE	• Decrease in amount of brake fluid • Malfunction of brake fluid level sensor

Diagnostic procedure

STEP	INSPECTION		ACTION
1	**CHECK FOR CAN FOR DTCs** • Is any of DTC U1900 and/or U2516 has also been stored?	Yes	Follow inspection procedures for CAN system. (See T–144 DTC U0073, U1900, U2516)
		No	Go to next step.
2	**INSPECT BRAKE FLUID LEVEL** • Inspect brake fluid level. • Is it okay?	Yes	Go to next step.
		No	Add brake fluid to specified level, then go to Step 3.
3	**INSPECT BRAKE FLUID LEVEL SENSOR** • Turn ignition key to OFF. • Disconnect brake fluid level sensor connector. • Measure resistance between brake fluid level sensor terminals. — Brake fluid level above MIN: resistance about **500 ohms** — Brake fluid level below MIN: resistance within **0—1 ohm** • Is it okay?	Yes	Go to next step.
		No	Repair brake fluid level sensor, then go to Next step.
4	**VERIFY TROUBLESHOOTING COMPLETED** • Make sure to reconnected all disconnected connectors. • Clear DTC from memory. (See P–46 Clearing DTCs Procedures) • Is same DTC present?	Yes	Replace DSC HU/CM, then go to next step.
		No	Go to next step.
5	**VERIFY AFTER REPAIR PROCEDURE** • Is there any other DTC present?	Yes	Go to applicable DTC inspection.
		No	Troubleshooting completed.

DTC C1140

A6E697367650W11

DTC C1140	DSC HU/CM (pump)
DETECTION CONDITION	Right front and left rear wheels, or left front and right rear wheel-lock is detected during DSC operation.
POSSIBLE CAUSE	Stuck pump motor in DSC HU/CM

Diagnostic procedure

STEP	INSPECTION		ACTION
1	**INSPECT DSC HU/CM OPERATION** • Perform DSC HU/CM system inspection. (See P–35 DSC SYSTEM INSPECTION) • Is it okay?	Yes	Go to next step.
		No	Replace DSC HU/CM, then go to Step 4.
2	**INSPECT CONVENTIONAL BRAKE OPERATION** • Inspect brake fluid level. • Start engine. • Perform a road test to verify conventional vehicle braking performance. • Is there any concern.	Yes	Inspect conventional brake line, then go to Step 4.
		No	Go to next step.
3	**INSPECT REAR BRAKE DRAGGING** • Turn ignition key to OFF. • Jack-up vehicle and support it with safety stand. • Release parking brake. • Turn rear wheel by hand and inspect for rear brake drag. • Is rear brake dragging?	Yes	Repair parking brake system, then go to next step.
		No	Go to next step.
4	**VERIFY TROUBLESHOOTING COMPLETED** • Clear DTC from memory. (See P–46 Clearing DTCs Procedures) • Start engine and drive vehicle at **10 km/h {6.2 mph}** or above at least one minute. • Gradually slow down vehicle and stop. • Is same DTC present?	Yes	Replace DSC HU/CM, then go to next step.
		No	Go to next step.
5	**VERIFY AFTER REPAIR PROCEDURE** • Is there any other DTC present?	Yes	Go to applicable DTC inspection.
		No	Troubleshooting completed.

DTC C1145, C1155, C1165, C1175

A6E697367650W12

Caution

- **When attaching the tester lead to the DSC HU/CM connector the SST (49 G066 004) must be used.**

DTC	C1145 C1155 C1165 C1175	RF wheel-speed sensor LF wheel-speed sensor RR wheel-speed sensor LR wheel-speed sensor
DETECTION CONDITION	• Abnormal input is detected.	
POSSIBLE CAUSE	• Open or short to ground circuit in harness between DSC HU/CM terminal and wheel-speed sensor(s) terminal below — DSC HU/CM terminal M—RF wheel-speed sensor terminal A — DSC HU/CM terminal I—RF wheel-speed sensor terminal B — DSC HU/CM terminal F—LF wheel-speed sensor terminal A — DSC HU/CM terminal J—LF wheel-speed sensor terminal B — DSC HU/CM terminal K—RR wheel-speed sensor terminal A — DSC HU/CM terminal H—RR wheel-speed sensor terminal B — DSC HU/CM terminal Q—LR wheel-speed sensor terminal A — DSC HU/CM terminal N—LR wheel-speed sensor terminal B • Malfunction of wheel-speed sensor(s)	

P

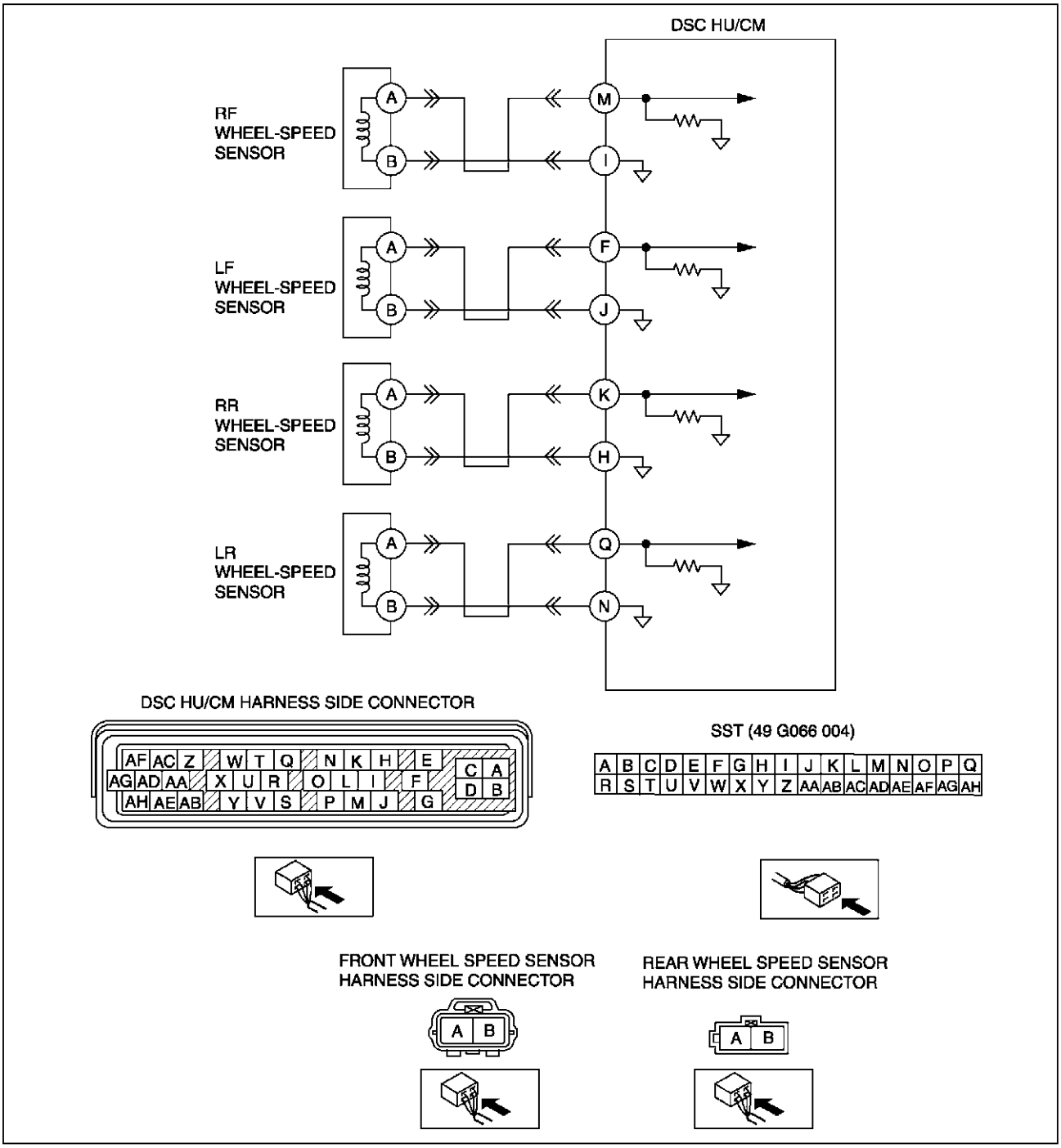

Diagnostic procedure

STEP	INSPECTION		ACTION
1	**INSPECT WHEEL-SPEED SENSOR CIRCUIT FOR OPEN CIRCUIT** • Turn ignition key to OFF. • Disconnect DSC HU/CM connector. • Measure resistance between suspected sensor terminals of DSC HU/CM connector (harness side). — RF wheel-speed sensor: M—I — LF wheel-speed sensor: F—J — RR wheel-speed sensor: K—H — LR wheel-speed sensor: Q—N • Is resistance **within 1.3—1.7 kilohm**?	Yes	Go to next step.
		No	Go to Step 3.

STEP	INSPECTION		ACTION
2	**INSPECT WHEEL-SPEED SENSOR CIRCUIT FOR SHORT TO GROUND** • Turn ignition key to OFF. • Inspect continuity between suspected sensor terminal(s) of DSC HU/CM connector (harness side) and ground(s). — RF wheel-speed sensor (+): M — RF wheel-speed sensor (–): I — LF wheel-speed sensor (+): F — LF wheel-speed sensor (–): J — RR wheel-speed sensor (+): K — RR wheel-speed sensor (–): H — LR wheel-speed sensor (+): Q — LR wheel-speed sensor (–): N • Is there continuity?	Yes	Repair or replace harness for short to ground circuit between DSC HU/CM and wheel-speed sensor(s), then go to Step 5.
		No	Go to Step 5.
3	**INSPECT WHEEL-SPEED SENSOR** • Turn ignition key to OFF. • Disconnect suspected sensor connector(s) and inspect resistance between sensor terminals (part side). • Is resistance **within 1.3—1.7 kilohm**?	Yes	Go to next step.
		No	Replace wheel-speed sensor, then go to Step 5.
4	**INSPECT DSC HU/CM TO WHEEL-SPEED SENSOR CIRCUIT FOR OPEN CIRCUIT** • Inspect continuity between suspected sensor terminal(s) of DSC HU/CM connector (harness side) and wheel-speed sensor connector. (vehicle harness side) — RF wheel-speed sensor (+): M—A — RF wheel-speed sensor (–): I—B — LF wheel-speed sensor (+): F—A — LF wheel-speed sensor (–): J—B — RR wheel-speed sensor (+): K—A — RR wheel-speed sensor (–): H—B — LR wheel-speed sensor (+): Q—A — LR wheel-speed sensor (–): N—B • Is there continuity?	Yes	Repair or replace poor connections of DSC HU/CM connector and/or wheel-speed sensor connector(s), then go to next step.
		No	Repair or replace harness for open circuits between DSC HU/CM and wheel-speed sensor(s), then go to next step.
5	**VERIFY TROUBLESHOOTING COMPLETED** • Make sure to reconnect all disconnected connectors. • Clear DTC from memory. (See P–46 Clearing DTCs Procedures) • Is same DTC present?	Yes	Replace DSC HU/CM, then go to next step.
		No	Go to next step.
6	**VERIFY AFTER REPAIR PROCEDURE** • Is there any other DTC present?	Yes	Go to applicable DTC inspection.
		No	Troubleshooting completed.

DTC C1148, C1158, C1168, C1178, C1233, C1234, C1235, C1236

A6E697367650W13

DTC	**C1148, C1234** **C1158, C1233** **C1168, C1235** **C1178, C1236**	**RF wheel-speed sensor/sensor rotor** **LF wheel-speed sensor/sensor rotor** **RR wheel-speed sensor/sensor rotor** **LR wheel-speed sensor/sensor rotor**
DETECTION CONDITION	• C1148, C1158, C1168, C1178: — Abnormal sensor output is detected on any of four vehicle wheels when the vehicle goes from start to a speed of **10 km/h {6.2 mph}**. — Greater than specified amount of ABS demand occurs from front wheel sensors when vehicle is started. • C1234, C1233, C1235, C1236: — Abnormal sensor output due to chipping of sensor rotor teeth, etc. is detected. — ABS control operates for **60 seconds or more**.	
POSSIBLE CAUSE	• Short to ground circuit of wheel-speed sensor(s) circuit • Malfunction of wheel-speed sensor(s) • Damaged sensor rotor(s) • Incorrect clearance between wheel-speed sensor and sensor rotor • Poor installation of wheel speed sensor and/or sensor rotor (If the sensor rotor is installed twisted, it may cause output of abnormal wave form at high speeds). • DSC HU/CM internal damage (Solenoid valve malfunction, pump motor malfunction, or pipe clogging)	

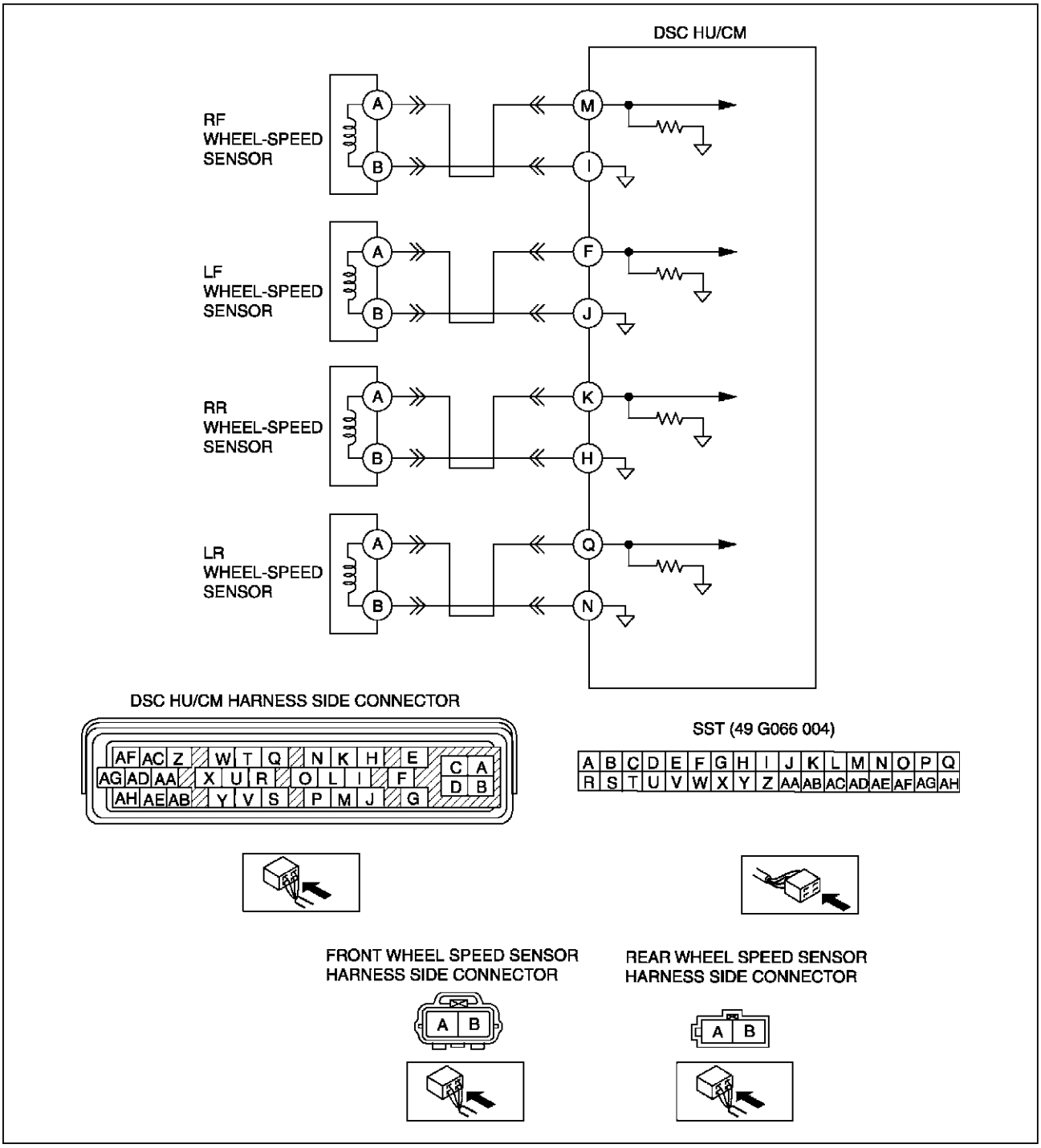

Diagnostic procedure

STEP	INSPECTION		ACTION
1	**VERIFY OTHER DTC HAS BEEN RECORDED** • Have DTCs related to solenoid valve, pump motor, or pump motor relay been stored?	Yes	Go to applicable DTC inspection.
		No	Go to next step.

STEP	INSPECTION		ACTION
2	**VERIFY IF CURRENT CONCERNED INPUT SIGNAL STATUS IS INTERMITTENT OR CONSTANT** • Turn ignition key to OFF. • Connect WDS or equivalent to DLC-2. • Start engine and drive vehicle. • Access LF_WSPD, LR_WSPD, RF_WSPD and RR_WSPD using WDS or equivalent. • Do vehicle speeds correspond approximately to the four PIDs above?	Yes	Go to Step 8.
		No	If there is a difference in speed of four wheels, go to next step. If any wheel speed is **0 km/h {0 mph}**, go to Step 4.
3	**INSPECT WHEEL-SPEED SENSOR OUTPUT PULSE** • Start engine and drive vehicle. • Inspect output voltage pattern using an oscilloscope. 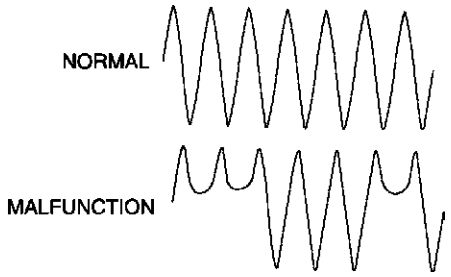 • Is output voltage pattern okay?	Yes	Go to Step 9.
		No	Go to Step 6.
4	**INSPECT ABS WHEEL-SPEED SENSOR CIRCUIT FOR SHORT TO GROUND** • Turn ignition key to OFF. • Disconnect DSC HU/CM and wheel-speed sensor connectors. • Inspect continuity between suspected sensor terminal(s) of DSC HU/CM connector (harness side) and ground(s). — RF wheel-speed sensor: M—ground — LF wheel-speed sensor: F—ground — RR wheel-speed sensor: K—ground — LR wheel-speed sensor: Q—ground • Is there continuity?	Yes	Repair or replace harness for short to ground circuit between DSC HU/CM and wheel-sped sensor, then go to Step 9.
		No	Go to next step.
5	**INSPECT WHEEL-SPEED SENSOR** • Turn ignition key to OFF. • Disconnect suspected wheel-speed sensor connector(s) and inspect resistance between wheel-speed sensor terminal(s) (part side). • Is resistance **within 1.3—1.7 kilohm**?	Yes	Go to next step.
		No	Replace wheel-speed sensor, then go to Step 9.
6	**INSPECT SENSOR ROTOR CLEARANCE** • Jack-up vehicle and support it with safety stands. • Remove suspected wheel(s). • Inspect clearance between wheel-speed sensor and sensor rotor. • Is clearance **within 0.3—1.1 mm {0.012—0.043 in}**?	Yes	Go to next step.
		No	Replace wheel-speed sensor(s), then go to Step 9.
7	**INSPECT SENSOR ROTOR FOR DAMAGE** • Jack-up vehicle and support it with safety stands. • Remove suspected wheel(s). • Visually inspect sensor rotor for missing, deformed and obstructed teeth. **Number of teeth: 44** • Is sensor rotor okay?	Yes	Go to next step.
		No	Replace sensor rotor, then go to Step 9.

P

STEP	INSPECTION		ACTION
8	**INSPECT DSC HU/CM OPERATION** • Perform DSC HU/CM system inspection. • See P–35 DSC SYSTEM INSPECTION • Is it okay?	Yes	Go to next step.
		No	Replace DSC HU/CM, then go to next step.
9	**VERIFY TROUBLESHOOTING COMPLETED** • Make sure to reconnect all disconnected connectors. • Clear DTC from memory. (See P–46 Clearing DTCs Procedures) • Start engine and drive vehicle at **10 km/h {6.2 mph}** or above. • Gradually slow down vehicle and stop. • Is same DTC present?	Yes	Replace DSC HU/CM, then go to next step.
		No	Go to next step.
10	**VERIFY AFTER REPAIR PROCEDURE** • Is there any other DTC present?	Yes	Go to applicable DTC inspection.
		No	Troubleshooting completed.

DTC C1186, C1266

A6E697367650W14

Caution

- **When attaching the tester lead to the DSC HU/CM connector the SST (49 G066 004) must be used.**

DTC C1186, C1266	Fail-safe relay
DETECTION CONDITION	• C1186: — Fail-safe relay in DSC HU/CM stuck OFF when ignition switch is turned ON, fail-safe relay ON is commanded. • C1266: — Fail-safe relay in DSC HU/CM stuck ON when ignition switch is turned ON, fail-safe relay OFF is commanded.
POSSIBLE CAUSE	• Malfunction of fuse (ABS 60 A) • Open circuit in harness between DSC HU/CM terminal C and battery positive terminal • Open or short of fail-safe relay in DSC HU/CM • Stuck fail-safe relay in DSC HU/CM

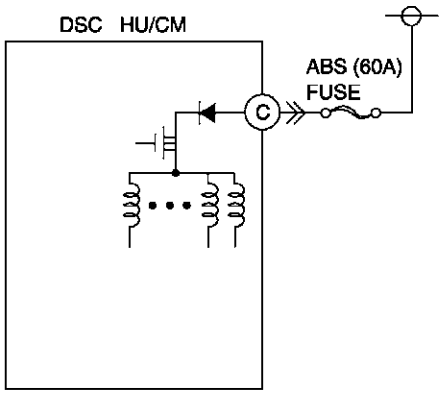

DSC HU/CM HARNESS SIDE CONNECTOR

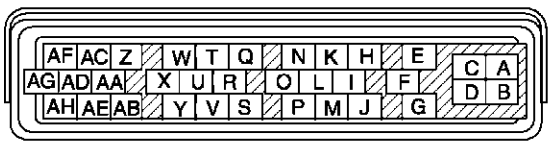

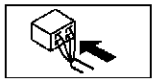

SST (49 G066 004)

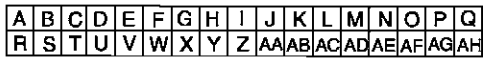

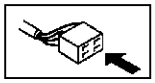

Diagnostic procedure

STEP	INSPECTION		ACTION
1	**INSPECT ABS FUSE CONDITION** • Is ABS fuse (60 A) okay?	Yes	Go to next step.
		No	Replace fuse, then go to Step 4.
2	**INSPECT FAIL-SAFE RELAY POWER SUPPLY CIRCUIT FOR OPEN CIRCUIT** • Turn ignition key to OFF. • Disconnect DSC HU/CM connector. • Connect **SST** (adapter harness) to DSC HU/CM connector (harness side only). • Turn ignition key to ON (engine OFF). • Measure voltage between DSC HU/CM terminal C (harness side) of **SST** and ground. • Is voltage **B+**?	Yes	Go to next step.
		No	Repair or replace harness for open circuit between battery positive terminal and DSC HU/CM terminal C, then go to Step 4.
4	**VERIFY FAIL-SAFE OPERATION** • Turn ignition key to OFF. • Remove **SST** (adapter harness) and connect all disconnected connectors. • Connect WDS or equivalent to DLC-2. • Turn ignition key to ON (engine OFF). • Access ABS_POWER using WDS or equivalent. • Does fail-safe relay operate?	Yes	Go to next step.
		No	Replace DSC HU/CM, then go to next step.
5	**VERIFY TROUBLESHOOTING COMPLETED** • Clear DTC from memory. See P–46 Clearing DTCs Procedures • Is same DTC present?	Yes	Replace DSC HU/CM, then go to next step.
		No	Go to next step.
6	**VERIFY AFTER REPAIR PROCEDURE** • Is there any other DTC present?	Yes	Go to applicable DTC inspection.
		No	Troubleshooting completed.

DTC C1194, C1198, C1210, C1214, C1242, C1246, C1250, C1254, C1400, C1410, C1957, C1958

A6E697367650W15

DTC	**C 1210** **C 1214** **C 1194** **C 1198** **C 1246** **C 1254** **C 1242** **C 1250** **C 1400** **C 1410** **C 1957** **C 1958**	**RF pressure reduction solenoid valve** **RF pressure retention solenoid valve** **LF pressure reduction solenoid valve** **LF pressure retention solenoid valve** **RR pressure reduction solenoid valve** **RR pressure retention solenoid valve** **LR pressure reduction solenoid valve** **LR pressure reduction solenoid valve** **RF traction switch solenoid valve** **LF traction switch solenoid valve** **RF DSC switch solenoid valve** **LF DSC switch solenoid valve**
DETECTION CONDITION	• Solenoid monitor signal does not track in response to solenoid ON/OFF command.	
POSSIBLE CAUSE	• Stuck solenoid valve in DSC HU/CM	

Diagnostic procedure

STEP	INSPECTION		ACTION
1	**VERIFY SOLENOID VALVE OPERATION** • Turn ignition key to OFF. • Remove **SST** (adapter harness) and connect all disconnected connectors. • Connect WDS or equivalent to DLC-2. • Turn ignition key to ON (engine OFF). • Access solenoid valve(s) PIDs using WDS or equivalent. • Does solenoid valve operate?	Yes	Go to next step.
		No	Repair DSC HU/CM, then go to next step.

P

STEP	INSPECTION		ACTION
2	**VERIFY TROUBLESHOOTING COMPLETED** • Clear DTC from memory. (See P–46 Clearing DTCs Procedures) • Start engine and drive vehicle at **10 km/h {6.2 mph}** or above. • Gradually slow down and stop vehicle. • Is same DTC present?	Yes	Replace DSC HU/CM, then go to next step.
		No	Go to next step.
3	**VERIFY AFTER REPAIR PROCEDURE** • Is there any other DTC present?	Yes	Go to applicable DTC inspection.
		No	Troubleshooting completed.

DTC C1280, C1730, C1951, C1952, C1959

A6E697367650W17

Caution

- **When attaching the tester lead to the DSC HU/CM connector the SST (49 G066 004) must be used.**

DTC C1280, C1730, C1951, C1952, C1959	Combine sensor
DETECTION CONDITION	• C1280: — Yaw rate sensor part 0-point correction value is **3 or more,** or **2 or less**. — Output voltage value from yaw rate sensor part remains absolutely unchanged. — Difference between estimated yaw rate value, calculated from wheel speed-sensor, lateral-G sensor, steering angle sensor, and the value output from yaw rate sensor exceeds specification. • C1730 — Voltage to combine sensor is detected out of range. • C1952: — Voltage of yaw rate sensor monitor is detected at **3.5 V or less**. • C1951: — Monitor voltage of lateral-G sensor is detected at **4.5 V or more**, or **0.5 V or less**. — Monitor voltage difference of **1.25 V or more**, within 1 cycle is detected 8 times in 1 second. • C1959: — Lateral-G sensor part 0-point correction value is **3 or more,** or **2 or less**. — Output voltage value from lateral-G sensor part remains absolutely unchanged. — Difference between estimated lateral-G force calculated from steering angle sensor, and the value output from lateral-G sensor exceeds specification.
POSSIBLE CAUSE	• Open circuit in harness between combine sensor terminal C and DSC HU/CM terminal P • Open, short to power, or short to ground circuit in harness between DSC HU/CM terminal T and Combine sensor terminal D • Open circuit, short to power, or short to ground in harness between DSC HU/CM terminal O and combine sensor terminal B • Open circuit in harness between combine sensor terminal E and DSC HU/CM terminal Y • Open circuit, short to power, or short to ground in harness between DSC HU/CM terminal S and combine sensor terminal F • Malfunction of combine sensor

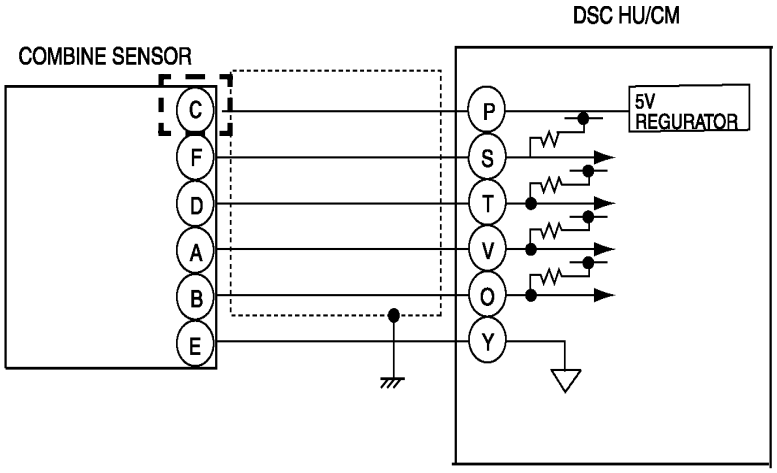

DSC HU/CM HARNESS SIDE CONNECTOR

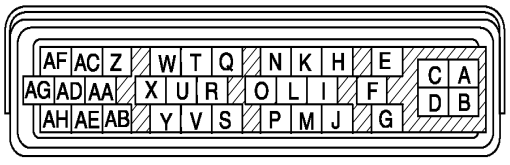

SST (49 G066 004)

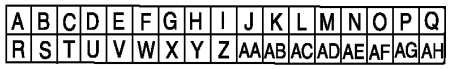

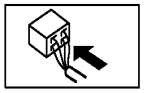

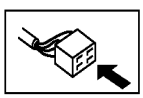

COMBINE SENSOR HARNESS SIDE CONNECTOR

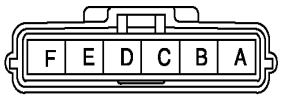

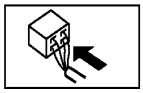

P

Diagnostic procedure

STEP	INSPECTION		ACTION
1	**INSPECT COMBINE SENSOR POWER SUPPLY CIRCUIT FOR OPEN CIRCUIT** • Turn ignition key to ON (engine OFF). • Measure voltage between combine sensor terminal C (harness side) of and ground. • Is voltage **4.5—5.5 V**?	Yes	Go to next step.
		No	Repair or replace harness for open circuit between yaw rate sensor terminal C and ignition switch, then go to Step 8.
2	**INSPECT COMBINE SENSOR GROUND CIRCUIT FOR OPEN CIRCUIT** • Turn ignition key to OFF. • Disconnect DSC HU/CM and yaw rate sensor connectors. • Inspect continuity between DSC HU/CM terminal Y (harness side) and combine sensor terminal E (harness side). • Is there continuity?	Yes	Go to next step.
		No	Repair or replace harness for open circuit between DSC HU/CM terminal Y and yaw rate sensor terminal E, then go to Step 8.
3	**INSPECT YAW RATE SENSOR PART SIGNAL CIRCUIT FOR OPEN CIRCUIT** • Inspect continuity between DSC HU/CM terminal T (harness side) and combine sensor terminal D (harness side). • Is there continuity?	Yes	Go to next step.
		No	Repair or replace harness for open circuit between DSC HU/CM terminal T and yaw rate sensor terminal D, then go to Step 8.
4	**INSPECT LATERAL-G SENSOR PART SIGNAL CIRCUIT FOR OPEN CIRCUIT** • Inspect continuity between DSC HU/CM terminal O (harness side) and combine sensor terminal B (harness side). • Is there continuity?	Yes	Go to next step.
		No	Repair or replace harness for open circuit between DSC HU/CM terminal O and combine sensor terminal B, then go to Step 8.
5	**INSPECT YAW RATE SENSOR PART SIGNAL CIRCUIT FOR SHORT TO GROUND** • Turn ignition key to OFF. • Inspect continuity between DSC HU/CM terminal T (harness side) and ground. • Is there continuity?	Yes	Repair or replace harness for short to ground circuit between DSC HU/CM terminal T and combine sensor terminal D, then go to Step 8.
		No	Go to next step.
6	**INSPECT LATERAL-G SENSOR PART SIGNAL CIRCUIT FOR SHORT TO GROUND** • Turn ignition key to OFF. • Inspect continuity between DSC HU/CM terminal O (harness side) and ground. • Is there continuity?	Yes	Repair or replace harness for short to ground circuit between DSC HU/CM terminal O and combine sensor terminal B, then go to Step 8.
		No	Go to next step.
7	**INSPECT DIAGNOSIS SIGNAL CIRCUIT FOR SHORT FOR OPEN** • Turn ignition key to OFF. • Inspect continuity between DSC HU/CM terminal S (harness side) and combine sensor terminal F. • Is there continuity?	Yes	Repair or replace harness for open circuit between DSC HU/CM terminal S and combine sensor terminal F, then go to Step 8.
		No	Go to next step.
8	**INSPECT DIAGNOSIS SIGNAL CIRCUIT FOR SHORT TO GROUND** • Turn ignition key to OFF. • Inspect continuity between DSC HU/CM terminal S (harness side) and combine sensor terminal F. • Is there continuity?	Yes	Repair or replace harness for short to ground circuit between DSC HU/CM terminal S and combine sensor terminal F, then go to Step 8.
		No	Go to next step.
9	**INSPECT COMBINE SENSOR** • Inspect combine sensor. (See P–43 COMBINE SENSOR INSPECTION) • Is it okay?	Yes	Go to next step.
		No	Replace yaw rate sensor, then go to next step.
10	**VERIFY TROUBLESHOOTING COMPLETED** • Clear DTC from memory. (See P–46 Clearing DTCs Procedures) • Is same DTC present?	Yes	Replace DSC HU/CM, then go to next step.
		No	Go to next step.
11	**VERIFY AFTER REPAIR PROCEDURE** • Is there any other DTC present?	Yes	Go to applicable DTC inspection.
		No	Troubleshooting completed.

DTC C1414

A6E697367650W16

DTC C1414	DSC HU/CM mismatched installation
DETECTION CONDITION	• Detection of situation where vehicle-type or drive system input signal and DSC HU/CM information remains incongruent through CAN information
POSSIBLE CAUSE	• Mismatched installation of DSC HU/CM

Diagnostic procedure

STEP	INSPECTION		ACTION
1	**INSPECT DSC HU/CM FOR MISMATCHED INSTALLATION** • Verify DSC HU/CM part number • Has a DSC HU/CM with the correct part number been installed?	Yes	Go to next step.
		No	Replace with correct DSC HU/CM part number, then go to Step 7.
2	**INSPECT RELATED WIRING HARNESS FOR MISMATCHED INSTALLATION** • Verify wiring harness part number • Has a wiring harness with the correct part number been installed?	Yes	Go to next step.
		No	Replace with correct DSC HU/CM part number, then go to next Step.
3	**Configulate ABS (ABS/TCS) HU/CM** • Can DSC HU/CM configulate properly?	Yes	Go to next step.
		No	Replace DSC HU/CM
4	**VERIFY TROUBLESHOOTING COMPLETED** • Make sure to reconnected all disconnect connectors. • Clear DTC from memory. See P–46 Clearing DTCs Procedures • Is same DTC present?	Yes	Replace DSC HU/CM, then go to next step.
		No	Go to next step.
5	**VERIFY AFTER REPAIR PROCEDURE** • Is there any other DTC present?	Yes	Go to applicable DTC inspection.
		No	Troubleshooting completed.

DTC C1507, C1508

A6E697367650W20

DTC C1507 C1508	DSC control
DETECTION CONDITION	• C1507: — Brake TCS or DSC controls continue operation for **20 seconds or more**. • C1508: — Engine TCS control continues operation for **60 seconds or more**.
POSSIBLE CAUSE	• System is normal For protection of solenoid valves in the DSC HU/CM, or protection of the engine, sustained and continual control of DSC and TCS is inhibited.

Diagnostic procedure

STEP	INSPECTION		ACTION
1	**VERIFY CURRENT STATUS OF MALFUNCTION** • Clear DTC from memory. (See P–46 Clearing DTCs Procedures) • Start engine and drive vehicle at **10 km/h {6.2 mph}** or above. • Is same DTC present?	Yes	Replace DSC HU/CM, then go to next step.
		No	Inspect intermittent concern using the same procedure as engine control system.
2	**VERIFY AFTER REPAIR PROCEDURE** • Is there any other DTC present?	Yes	Go to applicable DTC inspection.
		No	Troubleshooting completed.

P

DTC C1510, C1511, C1512, C1513

A6E697367650W21

DTC	C1510 C1511 C1512 C1513	**RF solenoid valve, motor or RF wheel-speed sensor/sensor rotor** **LF solenoid valve, motor or LF wheel-speed sensor/sensor rotor** **RR solenoid valve, motor or RR wheel-speed sensor/sensor rotor** **LR solenoid valve, motor or LR wheel-speed sensor/sensor rotor**
DETECTION CONDITION	• Wheel lock is detected during ABS operation (pressure reduction inoperative). • Pressure reduction on a single wheel continues for **20 seconds or more**.	
POSSIBLE CAUSE	• Malfunction of solenoid valve in DSC HU/CM • Malfunction of wheel-speed sensor • Damaged sensor rotor • Stuck pump motor in DSC HU/CM	

Diagnostic procedure

STEP	INSPECTION		ACTION
1	**VERIFY OTHER DTC HAS BEEN RECORDED** • Has any wheel speed sensor, sensor rotor, solenoid valve, pump motor, or motor relay related DTC been output?	Yes	Go to applicable DTC inspection.
		No	Go to next step.
2	**INSPECT DSC HU/CM OPERATION** • Perform DSC HU/CM system inspection. See P–35 DSC SYSTEM INSPECTION • Is it okay?	Yes	Go to next step.
		No	Replace DSC HU/CM, then go to next step.
3	**VERIFY CURRENT STATUS OF MALFUNCTION** • Clear DTC from memory. See P–46 Clearing DTCs Procedures • Start engine and drive vehicle at **10 km/h {6.2 mph}** or above at least one minute. • Gradually slow down and stop vehicle. • Is same DTC present?	Yes	Replace DSC HU/CM, then go to next step.
		No	Go to next step.
4	**VERIFY AFTER REPAIR PROCEDURE** • Is there any other DTC present?	Yes	Go to applicable DTC inspection.
		No	Troubleshooting completed.

DTC C1953, C1954

A6E697367650W18

DTC	C1953, C1954	**Brake fluid pressure sensor**
DETECTION CONDITION	• C1953: — Monitor voltage of the brake fluid pressure sensor is detected at **4.5 V or more**, or **0.5 V or less**. — Monitor voltage difference of **0.4 V or more** within 1 cycle is detected 8 times in 1 second. • C1954: — Brake fluid pressure sensor 0-point correction value is **0.3 V or less**, or **0.9 V or more**. — Output voltage value from brake fluid pressure sensor does not increase **above 0.06 V**. — Difference between estimated brake pressure value and output value of brake fluid pressure sensor exceeds specification.	
POSSIBLE CAUSE	• Malfunction of brake fluid pressure sensor	

Diagnostic procedure

STEP	INSPECTION		ACTION
1	**INSPECT BRAKE FLUID PRESSURE SENSOR** • Inspect PID/DATA in brake fluid pressure sensor. • Inspect MCYLIP item using WDS or equivalent. • Is pressure value change between **0—22.5 MPa** when brake pedal is pressed?	Yes	Go to next step.
		No	Repair DSC HU/CM.
2	**VERIFY TROUBLESHOOTING COMPLETED** • Clear DTC from memory. (See P–46 Clearing DTCs Procedures) • Is same DTC present?	Yes	Replace DSC HU/CM, then go to next step.
		No	Go to next step.
3	**VERIFY AFTER REPAIR PROCEDURE** • Is there any other DTC present?	Yes	Go to applicable DTC inspection.
		No	Troubleshooting completed.

DTC C1955, C1956

A6E697367650W19

Caution

- **When attaching the tester lead to the DSC HU/CM connector the SST (49 G066 004) must be used.**

DTC C1955, C1956	Steering angle sensor
DETECTION CONDITION	• C1955: — Output voltages from steering angle sensors 1 and 2 are not at **1 V or less**, or not at **3.25 V or more.** • C1956: — Sensor 1 voltage remains unchanged, sensor 2 voltage changes. — Sensor 2 voltage remains unchanged, sensor 1 voltage changes. — When steering wheel is turned in specified direction, neutral position is detected even when rotated at **18 degrees or more**.j
POSSIBLE CAUSE	• Open circuit in harness between steering angle sensor terminal A and ignition switch • Open, short to power, or short to ground circuit in harness between DSC HU/CM terminal X and steering angle sensor terminal B • Open, short to power, or short to ground circuit in harness between DSC HU/CM terminal W and steering angle sensor terminal C • Open, short to power, or short to ground circuit in harness between DSC HU/CM terminal U and steering angle sensor terminal D • Open circuit in harness between DSC HU/CM terminal Rand steering angle sensor terminal F • Malfunction of steering angle sensor

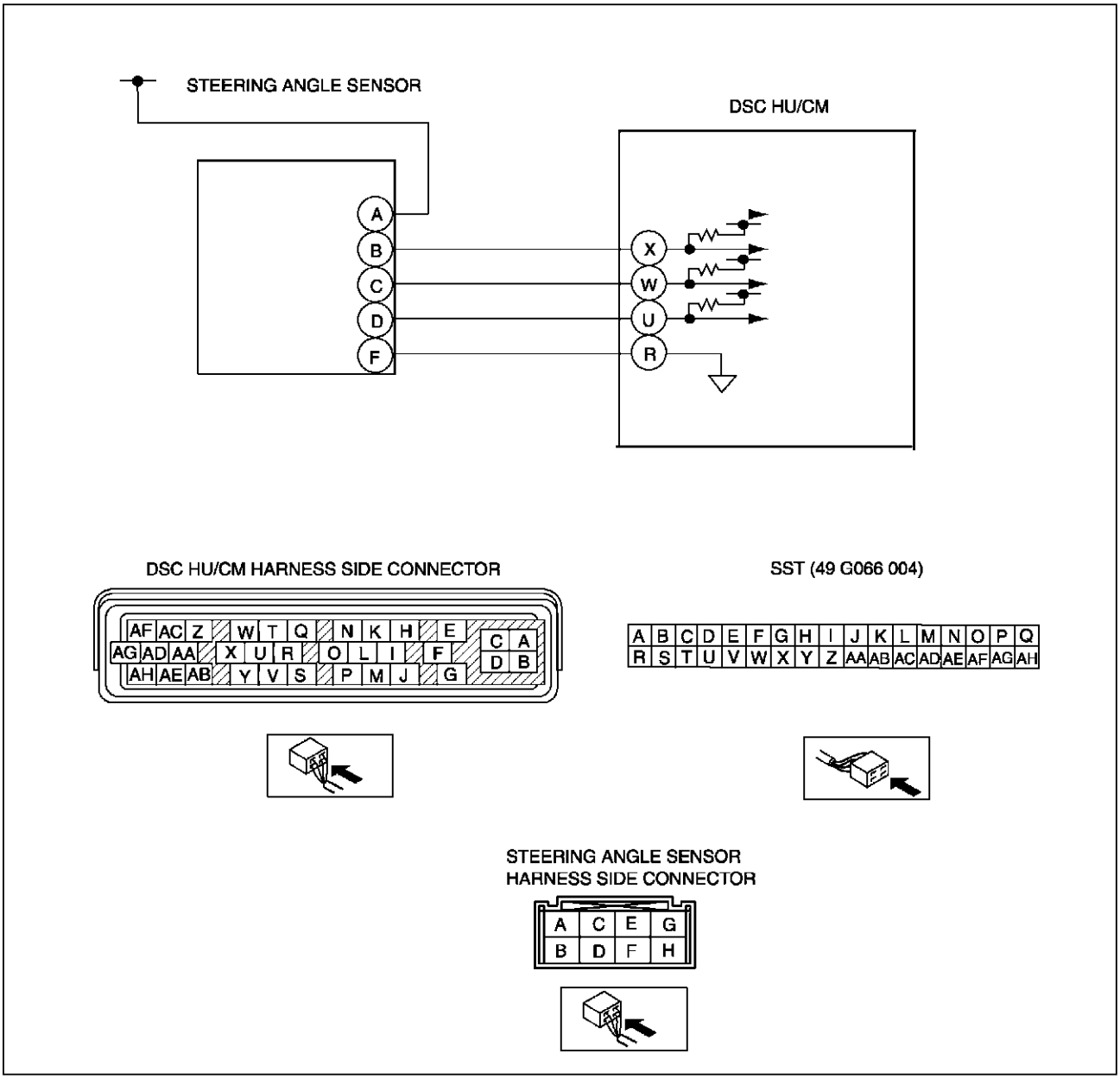

Diagnostic procedure

STEP	INSPECTION		ACTION
1	**INSPECT STEERING ANGLE SENSOR POWER SUPPLY CIRCUIT FOR OPEN CIRCUIT** • Turn ignition key to ON (engine OFF). • Measure voltage between steering angle sensor terminal A (harness side) and ground. • Is voltage **B+**?	Yes	Go to next step.
		No	Repair or replace harness for open circuit between steering angle sensor terminal A and ignition switch, then go to Step 7.
2	**INSPECT STEERING ANGLE SENSOR GROUND CIRCUIT FOR OPEN CIRCUIT** • Turn ignition key to OFF. • Disconnect DSC HU/CM and steering angle sensor connectors. • Inspect continuity between DSC HU/CM terminal R (harness side) and steering angle sensor terminal F (harness side). • Is there continuity?	Yes	Go to next step.
		No	Repair or replace harness for open circuit between DSC HU/CM terminal R and steering angle sensor terminal F, then go to Step 7.

STEP	INSPECTION		ACTION
3	**INSPECT STEERING ANGLE SENSOR SIGNAL CIRCUIT FOR OPEN CIRCUIT** • Inspect continuity between DSC HU/CM terminal (harness side) and steering angle sensor terminal (harness side) below. — Sensor 1: DSC HU/CM X and steering angle sensor B — Sensor 2: DSC HU/CM W and steering sensor C — Neutral: DSC HU/CM U and steering angle sensor D • Is there continuity?	Yes	Go to next step.
		No	Repair or replace harness for open circuit between DSC HU/CM terminal and steering angle sensor terminal, then go to Step 7.
4	**INSPECT STEERING ANGLE SENSOR SIGNAL CIRCUIT FOR SHORT TO POWER** • Turn ignition key to ON (engine OFF). • Measure voltage between DSC HU/CM terminal (harness side) and ground below. — Sensor 1: DSC HU/CM X and ground — Sensor 2: DSC HU/CM W and ground — Neutral: DSC HU/CM U and ground • Is voltage **B+**?	Yes	Repair or replace harness for short to power circuit between DSC HU/CM terminal and steering angle sensor terminal, then go to Step 7.
		No	Go to next step.
5	**INSPECT STEERING ANGLE SENSOR SIGNAL CIRCUIT FOR SHORT TO GROUND** • Turn ignition key to OFF. • Inspect continuity between DSC HU/CM terminal (harness side) and ground below. — Sensor 1: DSC HU/CM X and ground — Sensor 2: DSC HU/CM W and ground — Neutral: DSC HU/CM U and ground • Is there continuity?	Yes	Repair or replace harness for short to ground circuit between DSC HU/CM terminal and steering angle sensor terminal, then go to Step 7.
		No	Go to next step.
6	**INSPECT STEERING ANGLE SENSOR** • Inspect steering angle sensor. (See P–44 STEERING ANGLE SENSOR INSPECTION) • Is it okay?	Yes	Go to next step.
		No	Replace steering angle sensor, then go to next step.
7	**VERIFY TROUBLESHOOTING COMPLETED** • Clear DTC from memory. (See P–46 Clearing DTCs Procedures) • Is same DTC present?	Yes	Replace DSC HU/CM, then go to next step.
		No	Go to next step.
8	**VERIFY AFTER REPAIR PROCEDURE** • Is there any other DTC present?	Yes	Go to applicable DTC inspection.
		No	Troubleshooting completed.

P

DTC U2021

A6E697367650W22

Note
- To warm up the engine completely, idle the engine and wait for **more than 5 minutes**.

DTC U2021	Engine coolant temperature
DETECTION CONDITION	• After engine is warmed up, engine coolant temperature is **0 °C {32 °F}** or less, and TCS operation is inhibited by PCM.
POSSIBLE CAUSE	• System is normal. When engine coolant temperature rises, TCS operation is executed by PCM.

Diagnostic procedure

STEP	INSPECTION		ACTION
1	**CHECK WHETHER ENGINE HAS WARMED UP** • Has engine warmed up?	Yes	Go to next step.
		No	Warm up the engine. If DSC OFF light goes out, system is normal.
2	**VERIFY THAT MALFUNCTION SYMPTOM OCCURS AFTER ENGINE IS WARMED UP** • Warm up the engine. • Is DSC indicator light also illuminated and DTC C1119 obtained?	Yes	Go to DTC C1119 chart.
		No	If DSC OFF light goes out, system is normal. If DSC OFF light does not go out, go to next step.
3	**VERIFY TROUBLESHOOTING COMPLETED** • Clear DTC from memory. (See P–46 Clearing DTCs Procedures) • Is same DTC present?	Yes	Replace DSC HU/CM, then go to next step.
		No	Go to next step.
4	**VERIFY AFTER REPAIR PROCEDURE** • Is there any other DTC present?	Yes	Go to applicable DTC inspection.
		No	Troubleshooting completed.

TROUBLESHOOTING (ABS/TCS/DYNAMIC STABILITY CONTROL)

SYSTEM WIRING DIAGRAM

A6E699067650W01

ABS (ABS/TCS)

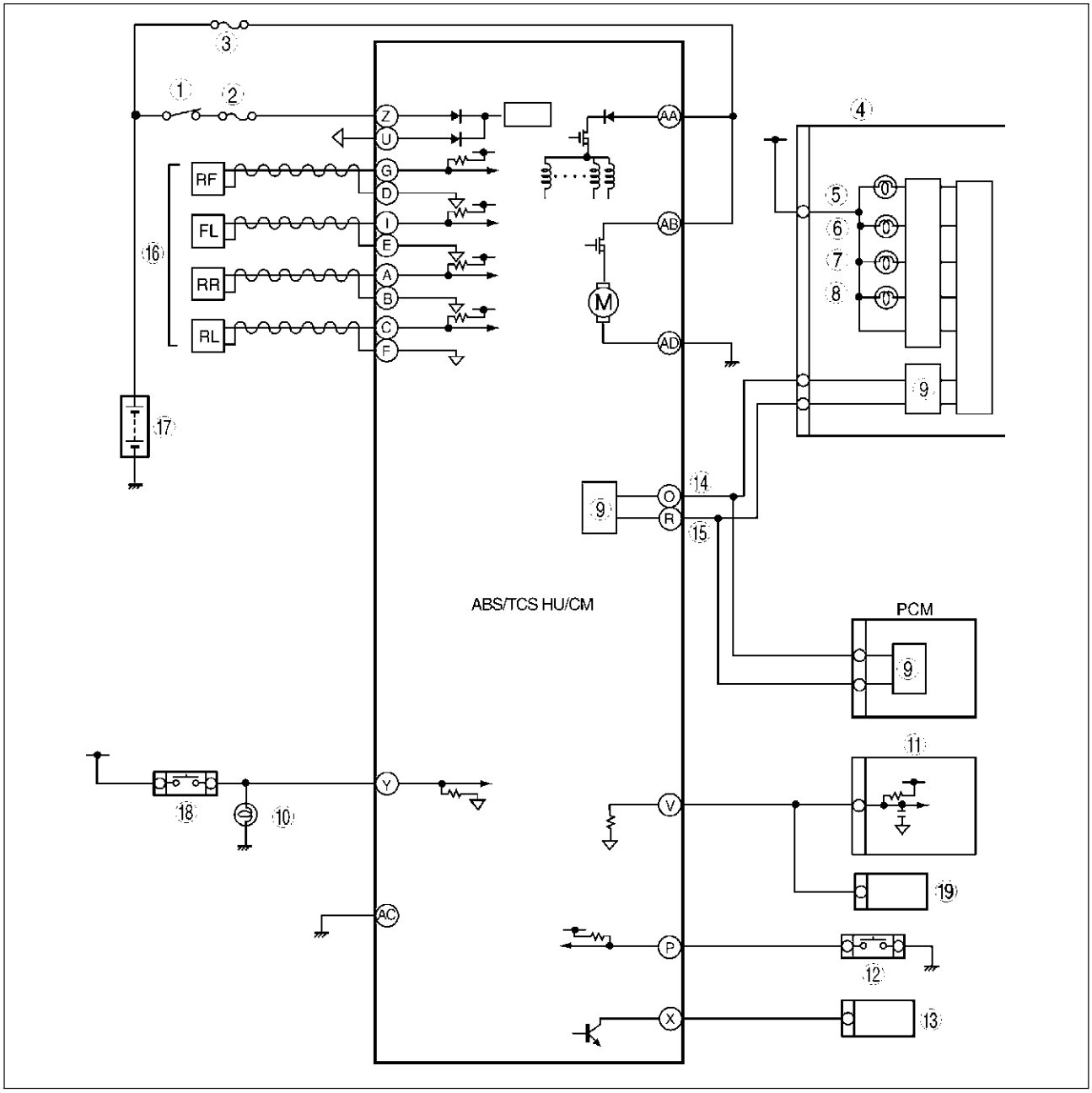

A6E6921T001

1	IG switch
2	SUS 15 A fuse
3	ABS 60 A fuse
4	Meter
5	ABS warning light
6	Brake system warning light
7	TCS OFF light
8	TCS indicator light
9	CAN driver
10	Brake light

11	Cruise actuator
12	TCS OFF switch
13	DLC-2
14	CAN-H
15	CAN-L
16	ABS Wheel-speed sensor
17	Battery
18	Brake switch
19	Audio unit, Wiper and washer switch, Car-navigation unit, Auto leveling control unit

DSC

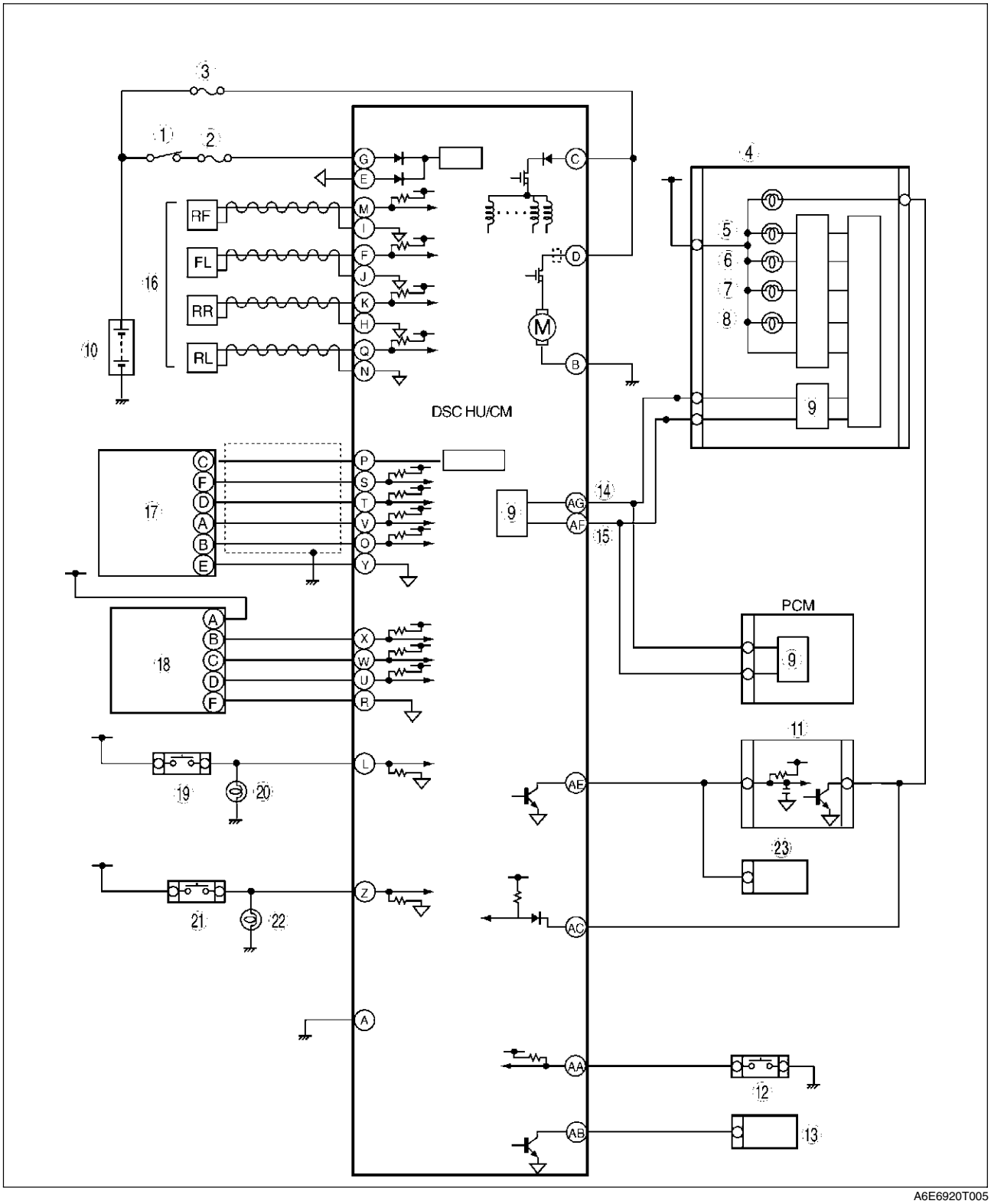

1	IG switch
2	SUS 15A fuse
3	ABS 60 A fuse
4	Meter
5	ABS warning light
6	Brake system warning light

7	DSC OFF light
8	DSC indicator light
9	CAN driver
10	Battery
11	Cruise actuator
12	DSC OFF switch

13	DLC-2
14	CAN-H
15	CAN-L
16	Wheel-speed sensor
17	Combine sensor
18	Steering angle sensor

19	Brake switch
20	Brake light
21	Back-up light switch (MTX only)
22	Back-up light
23	Audio unit, Wiper and washer switch, Car-navegation unit, Auto leveling control unit

FOREWORD

A6E699067650W02

- Before performing the steps in Symptom Troubleshooting, perform the On-board Diagnostic Inspection. To check the DTC, follow the DTC Inspection steps.

PRECAUTION

A6E699067650W03

Vehicles with ABS/TCS

1. The ABS warning light, BRAKE system warning light, TCS indicator light and/or TCS OFF light illuminate even when the system is normal.

Warning lights that may illuminate and/or flash	Cases in which the light may illuminate	Conditions in which the light will go out	ABS, EBD, TCS and DSC control
Any or all the following light(s) illuminate: • ABS warning light • BRAKE system warning light(*1)	Under any of the following conditions: • When the front wheels are jacked up, stuck, or placed on a chassis roller, and only the front wheel ABS wheel speed sensors are spun for **more than 60 seconds**.	After turning ignition switch OFF, vehicle is driven at speed **greater than 10 km/h {6.2 mph}** and normal operation is confirmed.	• ABS: Cuts control. • EBD: 1. Cuts control, in cases where the light may illuminate, only when ABS CM detects that a wheel speed sensor determines that more than the two rear wheels are malfunctioning. 2. Operates control, if wheel speed sensor determines that more than 3 wheels are functioning correctly.
	Parking brake is not fully released while driving.		
	Brake drag.		
	Sudden acceleration/ deceleration.		
	Left/right or front/rear tires are different. (Size, radius, tire pressure, or wear is other than that listed on tire label.)		
All the following lights illuminate: • ABS warning light • BRAKE system warning light	Battery voltage at ABS-TCS HU/CM ignition terminal Z drops **below about 9 to 10 V.**(*2)	Battery voltage rises **abobe about 10 V.** (Only BRAKE system warning light goes out.)	ABS: Operates control. EBD: Operates control.

*1 : In cases where the light may illuminate, only when ABS/TCS HU/CM detects that speed sensor of rear wheel is malfunctioning.

*2 : If battery voltage drops **below 9 V** while vehicle speed is **greater than 6 km/h{3.7mph}**, ABS HU/CM records DTC B1318.

P

Warning lights that may illuminate and/or flash	Cases in which the light may illuminate	Conditions in which the light will go out	ABS, EBD, TCS and DSC control
All the following lights illuminate: • TCS OFF light	When the engine coolant temperature is below **0°C {32 F}**.(*2)	When engine is started and engine coolant temperature rises **above 0°C {32 F}.**)	ABS: Cuts control. EBD: Cuts control. TCS: 1. If TCS is operating, cuts control after gradually released TCS control value. 2. If TCS is not operating, cuts control.
All the following lights flash: • ABS warning light • BRAKE system warning light Following light illuminates: • TCS OFF light	When confirming DTC,PID/ DATA and ACTIVE COMAND MODES item using WDS or equivalent.	When ABS ON-BOARD DIAGNOSTIC SYSTEM is released.	ABS: Cuts control. EBD: Cuts control. TCS: Cuts control.

*1 : DTC U2021 for past malfunction is not recorded in the ABS/TCS HU/CM. DTC U2021 for present malfunction displayed, but goes out when engine coolant temperature rises **above 0°C {32F}.**

*2 : When malfunctions happen that display DTCs, flashes the ABS warning light.

2. Precautions during servicing of ABS/TCS
   The ABS/TCS is composed of electrical and mechanical parts.It is necessary to categorize malfunctions as being either electrical or hydraulic when performing troubleshooting.
   (1) Malfunction in electrical system
   - The ABS/TCS hydraulic unit and control module (ABS/TCS HU/CM) has an on-board diagnostic function. With this function, the ABS warning light and/or BRAKE system warning light will come on when there is a problem in the electrical system. Also, past and present malfunctions are recorded in the ABS/TCS HU/CM. This function can find malfunctions that do not occur during periodic inspections. Connect the WDS or equivalent to the DLC-2. The stored malfunction will be displayed in the order of occurrence. To find out the causes of ABS/TCS malfunction, use these on-board diagnostic results.
   - If malfunction occurred in the past but is now normal, the cause is likely a temporary poor connection of the harness. The ABS/TCS HU/CM usually operates normally. Be careful when searching for the cause of malfunction.
   - After repair, it is necessary to clear the DTC from the ABS/TCS HU/CM memory. Also, if the ABS/TCS related parts have been replaced, verify that the no DTC has been displayed after repairs.
   - After repairing the ABS wheel-speed sensor or ABS sensor rotor, or after replacing the ABS CM (ABS motor or ABS motor relay or solenoid valve), the ABS warning light may not go off (*) even when the ignition switch is turned on. In this case, drive the vehicle at a speed of **more than 10km/h{6.2mph}**, make sure that ABS warning light goes off, and then clear the DTC.
     * The BRAKE system warning light also illuminates when any rear wheel malformations.
   - When repairing, if the ABS/TCS related connectors are disconnected and the ignition switch is turned on, the ABS/TCS CM will mistakenly detect a fault and record it as a malfunction.
   - To protect the ABS/TCS HU/CM, make sure the ignition is off before connecting or disconnecting the ABS/TCS CM connector.
   - To protect the terminal, use the **SST** (ABS/TCS: 49 G066 001, DSC: 49 G066 004) when connecting the tester lead to the ABS/TCS HU/CM connector.

   (2) Malfunction in hydraulic system
   - Symptom in hydraulic system malfunction are similar to those in conventional brake malfunction. However, it is necessary to determine if the malfunction is in an ABS component or the conventional brake system.
   - The ABS hydraulic unit contains delicate mechanical parts. If foreign materials get into the component, the ABS may fail to operate. Also, it will likely become extremely difficult to find the location of the malfunction in the event that the brakes operate but the ABS does not. Make sure foreign materials do not get inside when servicing the ABS (e.g. brake fluid replacement, pipe removal).

Vehicle with DSC

1. The ABS warning light and/or BRAKE system warning light and/or DSC indicator light and/or TSC OFF light illuminate even when the system is normal.

Warning lights that may illuminate and/or flash	Cases in which the light may illuminate	Conditions in which the light will go out	ABS, EBD, TCS and DSC control
• ABS warning light • BRAKE system warning light • DSC indicator light • DSC OFF light	Under any of the following conditions: • When the front wheels are jacked up, struck, or placed on a chassis roller, and only the front wheel ABS wheel speed sensors are spun for **more than 60 senconds.**	After turning ignition switch OFF, vehicle is driven at speed **greater than 10 km/h {6.2MPH}** and normal operation is confirmed.	• ABS: Cuts control. • EBD: Cuts control. • TCS: Cuts control. • DSC: Cuts control.
	Parking brake is not fully released while driving.		
	Brake drag.		
	Sudden acceleration/deceleration.		
	Left/right or front/rear tires are different. (Size, radius, tire pressure, or wear is other than that listed on tire label.)		
	Battery voltage at DSC HU/CM ignition terminal drops **below about 9.5 V.**	Battery voltage rises **above about 9.5 V.**	ABS: Operates control. EBD: Operates control. TCS: Operates control. DSC: Operates control.
• Brake system warning light • DSC indicator light • TSC OFF light	Brake fluid amount is low.	Brake fluid level lower than recommended amount.	ABS: Operates control. EBD: Operates control. TCS: Cuts control. DSC: Cuts control.

2. Precautions during servicing of DSC The DSC is composed of electrical and mechanical parts. It is necessary to categorize malfunctions as being either electrical or hydraulic when performing troubleshooting.
   (1) Malfunction in electrical system
   - The control module has an on-board diagnostic function. With this function, the ABS warning light and/or BRAKE system warning light and/or DSC indicator light and/or TSC OFF light will come on when there is a problem in the electrical system.
     Also, past and present malfunction are recorded in the control module. This function can find malfunction that do not occur during periodic inspections. Connect the WDS or equivalent to the DLC-2. The stored malfunction will be displayed in the order of occurrence. To find out the causes of DSC malfunction, use these on-board diagnostic results.
   - If a malfunction occurred in the past but is now normal, the cause is likely a temporary poor connection of the harness.
     The control module usually operates normally. Be careful when searching for the cause of malfunction.
   - After repair, it is necessary to clear the DTC from the control module memory.
     Also, if the DSC related parts have been replaced, verify that the no DTC has been displayed after repairs.
   - After repairing the ABS wheel-speed sensor or ABS sensor rotor, or after replacing the control module, the ABS warning light may not go off even when the ignition switch is turned on. In this case, drive the vehicle at a speed of **more than 10 km/h {6.2 mph}**, make sure the ABS warning light goes off, and then clear the DTC.
   - When repairing, if the DSC related connectors are disconnected and the ignition switch is turned on, the control module will mistakenly detect a fault and record it as malfunction.

Caution

- **In DSC vehicles, when any DSC HU/CM, steering angle sensor, lateral-G sensor, yaw rate sensor are replaced. Perform the sensor standard point installation of each sensor.**

- To protect the control module, make sure the ignition is off before connecting or disconnecting the control module connector.
- To protect the terminal, use the **SST** (ABS/TCS: 49 G066 001, DSC: 49 G066 004) when connecting the tester lead to the DSC HU connector.

(2) Malfunction in hydraulic system
- Symptom in hydraulic system malfunction are similar to those in a conventional brake malfunction. However, it is necessary to determine if the malfunction is in a DSC component or the conventional brake system.
- The hydraulic unit contains delicate mechanical parts. If foreign materials get into the component, the DSC may fail to operate. Also, it will likely become extremely difficult to find the location of the malfunction in the event that the brakes operate but the DSC does not. Make sure foreign materials do not get inside when servicing the DSC (e.g.brake fluid replacement, pipe removal).

Intermittent Concern Troubleshooting
Vibration method
- If malfunction occurs or becomes worse while driving on a rough road or when engine is vibrating, perform the steps below.

Note
- There are several reasons why vehicle or engine vibration could cause an electrical malfunction. Check the following:
  — Connectors not fully seated.
  — Wire harnesses not having full play.
  — Wires laying across brackets or moving parts.
  — Wires routed too close to hot parts.
- An improperly routed, improperly clamped, or loose harness can cause wiring to become pinched between parts.
- The connector joints, points of vibration, and places where wire harnesses pass through the firewall, body panels, etc. are the major areas to be checked.

Inspection method for switch connectors or wires
1. Connect WDS or equivalent to DLC-2.
2. Turn ignition key to ON (Engine OFF).

Note
- If engine starts and runs, perform the following steps at idle.

3. Access PIDs for the switch you are inspecting.
4. Turn switch on manually.
5. Shake each connector or wire harness a bit vertically and horizontally while monitoring the PID.
   - If PID value is unstable, check for poor connection.

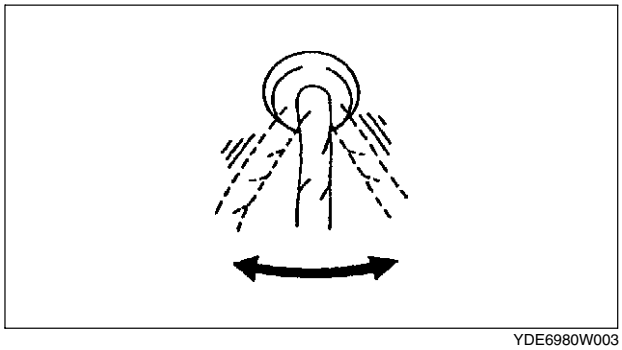

YDE6980W003

Inspection method for sensor connectors or wires
1. Connect WDS or equivalent to DLC-2.
2. Turn ignition key to ON (Engine OFF).

Note
- If engine starts and runs, perform the following steps at idle.

3. Access PIDs for the switch you are inspecting.

4. Shake each connector or wire harness a bit vertically and horizontally while monitoring the PID.
   - If PID value is unstable, check for poor connection.

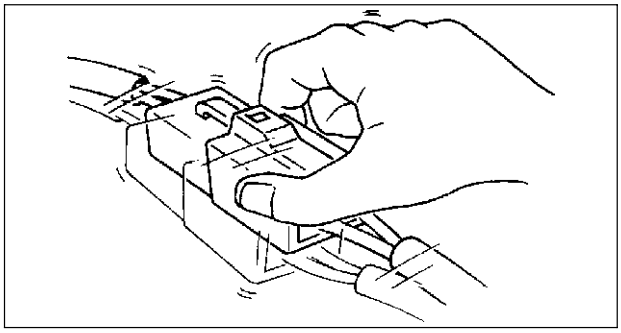

YDE6980W002

Inspection method for sensors

1. Connect WDS or equivalent to DLC-2.
2. Turn ignition key to ON (Engine OFF).

Note

- If engine starts and runs, perform the following steps at idle.

3. Access PIDs for the switch you are inspecting.
4. Vibrate the sensor slightly with your finger.
   - If PID value is unstable or malfunction occurs, check for poor connection and/or poorly mounted sensor.

Malfunction data monitor method

1. Perform malfunction reappearance test according to malfunction reappearance mode and malfunction data monitor. The malfunction cause is found in the malfunction data.

Malfunction data monitor using SST (ABS/TCS: 49 G066 001, DSC: 49 G066 004)

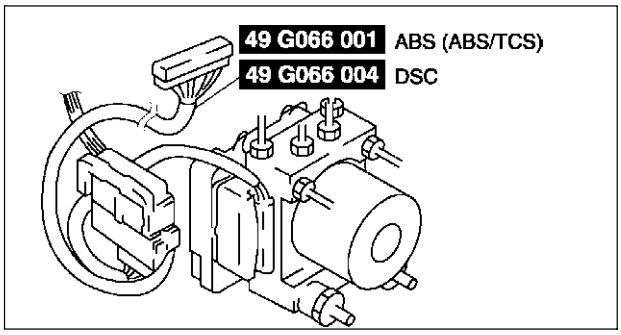

A6E6921W016

Connector terminal check method

1. Check the connection condition of each female terminal.
2. Insert male terminal; fit female terminal size to female terminal and check to see whether malfunction is in female terminal or not.

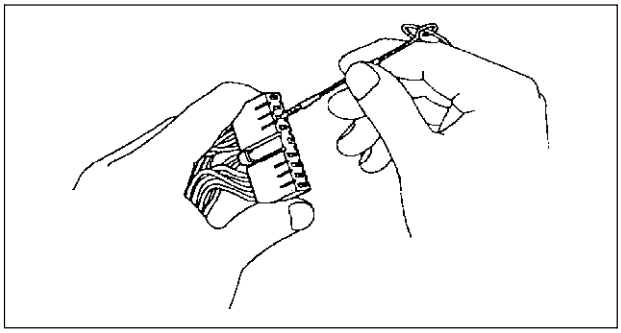

Y3E6980W001

P

SYMPTOM TROUBLESHOOTING

A6E699067650W04

- Verify the symptoms, and perform troubleshooting according to the appropriate number.

Vehicles with ABS/TCS

No.	Symptom
1	ABS warning light, BRAKE system warning light, TCS OFF light do not illuminate with ignition switch on.
2	Neither ABS warning light nor BRAKE system warning light illuminate with ignition switch on.
3	ABS warning light does not illuminate with ignition switch on.
4	BRAKE system warning light does not illuminate with ginning switch on.
5	TCS OFF light and TCS indicator light do not illuminate with ignition switch on.
6	Both ABS warning light and BRAKE system warning light stay **on more than 4 seconds** with ignition with on.
7	ABS warning light stays on **more than 4 seconds** with ingestion switch on.
8	BRAKE system warning light stays on **more than 4 seconds** with ignition switch on. (Parking brake is released.)
9	TCS OFF light stays on more than 4 seconds with ignition switch on.
10	TCS does not work correctly.
11	There is a malfunction in the system even through ABS warning light, BRAKE system warning light, TCS OFF light,TCS indicator light do not illuminate.

Vehicles with DSC

No.	Symptom
1	Any of the following lights do not illuminate with ignition switch on. • ABS warning light • BRAKE system warning light • DSC indicator light • DSC OFF light
2	Any of the following lights stay on: • ABS warning light. • BRAKE system warning light • DSC indicator light • DSC OFF light
3	There is a malfunction in the system even though ABS warning light, BRAKE system warning light, DSC indicator light and DSC OFF light do not illuminate.
4	ABS or TCS*1 operates frequently.
	TCS does not work correctly.
5	DSC*2 operates frequently.
	DSC does not work correctly.

*1 : DSC system contains traction control function, DSC indicator light goes on and off while DSC operates.
*2 : DSC indicator light goes on and off while DSC operates.

Vehicle with ABS/TCS

x: Applicable

Troubleshooting item	Possible factor	ABS/TCS HU/CM	Instrument cluster	ABS warning light circuit	BRAKE system warning light circuit	TCS OFF light circuit	TCS OFF switch circuit	Battery	Brake fluid	Brake fluid level sensor	Parking brake switch	Charging system	ABS/TCS HU/CM power supply (terminal Z)	ABS/TCS HU/CM GND 1 (terminal AA)	Instrument cluster power supply (terminal 2V)	Instrument cluster GND (terminal 2E)	Tire size, tire air pressure	Conventional brakes	Brake pipe routing
1	ABS warning light,BRAKE system warning light,TCS OFF light do not illuminate with ignition switch on.		x												x				
2	Neither ABS warning light nor BRAKE system warning light illuminates with ignition switch on.		x													x			
3	ABS warning light does not illuminate with ignition switch on.	x	x	x															
4	BRAKE system warning light does not illuminate with ignition switch on.	x	x		x														
5	TCS OFF light and TCS indicator light do not illuminate with ignition switch on.	x	x			x													
6	Both ABS warning light and BRAKE system warning light stay on more than 4 seconds with ignition switch on.	x	x	x	x			x				x	x	x					
7	ABS warning light stays on more than 4 seconds with ignition switch on.	x	x	x															
8	BRAKE system warning light stays on more than 4 seconds with ignition switch on.	x	x		x				x	x	x								
9	TCS OFF light stays on more than 4 seconds with ignition switch on.	x	x			x	x												
10	TCS does not work correctly.	x															x		
11	There is a malfunction in the system even though ABS warning light, BRAKE system warning light, TCS OFF light, TCS indicator light do not illuminate.	x																x	x

A6E6980W002

P

Vehicle with DSC

x: Applicable

Troubleshooting item	Possible factor	DSC unit	Instrument cluster	ABS warning light circuit	BRAKE system warning light circuit	DSC indicator light circuit	DSC OFF light circuit	Each sensor installation	Battery	Charging system	Brake fluid	Parking brake	Tire	Tire air pressure	Control module power supply system	Control module ground system	Instrument cluster power supply system	Instrument cluster ground system	Conventional brake
1	Any of the following lights do not illuminate with ignition switch on: (ABS warning light, BRAKE system warning light, DSC indicator light and/or DSC OFF light).	x	x														x	x	
2	Any of the following lights stay on: (ABS warning light, BRAKE system warning light, DSC indicator light and/or DSC OFF light).		x	x	x	x	x		x	x	x	x			x	x			
3	There is a malfunction in the system even though ABS warning light, DSC indicator light,and DSC OFF light do not illuminate.																		x
4	ABS or TCS (*1) operates frequently. /TCS does not work correctly. (*1): DSC system's contain traction control function, DSC indicator light goes on and off while DSC operate.							x					x	x					
5	DSC (*2) operates frequently. /DSC does not work correctly. (*2): DSC indicator light goes on and while DSC operate.							x											

A6E6980W001

NO.1 ABS WARNING LIGHT, BRAKE SYSTEM WARNING LIGHT, TCS OFF LIGHT DO NOT ILLUMINATE WITH IGNITION SWITCH ON

A6E699067650W05

Vehicle with ABS/TCS

1	**ABS warning light, BRAKE system warning light, TCS OFF light do not illuminate with ignition switch on.**
[TROUBLESHOOTING HINTS] • **Malfunction of instrument cluster or ABS/TCS HU/CM** • **Improper configuration (instrument cluster)**	

STEP	INSPECTION		ACTION
1	**VERIFY WHETHER MALFUNCTION IS IN WARNING LIGHTS AND INDICATOR LIGHTS' COMMON POWER SUPPLY, OR IN OTHER WARNING LIGHTS AND INDICATOR LIGHTS** • Do other warning and indicator lights illuminate when IG switch is turned ON?	Yes	Replace instrument cluster (open circuit in instrument cluster).
		No	Go to next step.
2	**INSPECT INSTRUMENT CLUSTER POWER SUPPLY FUSE** • Is instrument cluster ignition power supply fuse okay?	Yes	Go to next step.
		No	Check for a short to ground on blown fuse's circuit. Repair or replace as necessary. Install appropriate amperage fuse.
*3	**VERIFY WHETHER MALFUNCTION IS IN WIRING HARNESS (BETWEEN INSTRUMENT CLUSTER POWER SUPPLY AND INSTRUMENT CLUSTER FOR CONTINUITY) OR INSTRUMENT CLUSTER** • Turn ignition switch ON. • Measure voltage at instrument cluster connector (24-pin) terminal 2V. • Is voltage **approximately 12V?**	Yes	Replace instrument cluster (open circuit in instrument cluster).
		No	Check for open circuit between instrment cluster and ground. Repair or replace as neccessary.
4	**COMFIRM DTC U1900 USING WDS OR EQUIVALENT** • Retrieve DTC from PCM, ABS/TCS and instrument cluster. • Is DTC U1900 retrieved?	Yes	Go to next step.
		No	Inspect instrment cluster. If OK, then go to step6.
5	**COMFIRM THE FOLLOWING PIDs USING WDS OR EQUIVALENT:** • ABS_MSG • PCM_MSG • Is "not present" massage displayed on WDS or equivalent?	Yes	Replace instrument cluster (open circuit in instrument cluster).
		No	Network communication, for related system is malfunction. Repair or replace as neccessary.
6	**COMFIRM DTC B2477 FOR INSTRUMENT CLUSTER USING WDS OR EQUIVALENT** • Is DTC B2477 retrieved?	Yes	Re-configure the instrument cluster.
		No	Replace ABS/TCS HU/CM.

INSTRUMENT CLUSTER HARNESS SIDE CONNECTOR

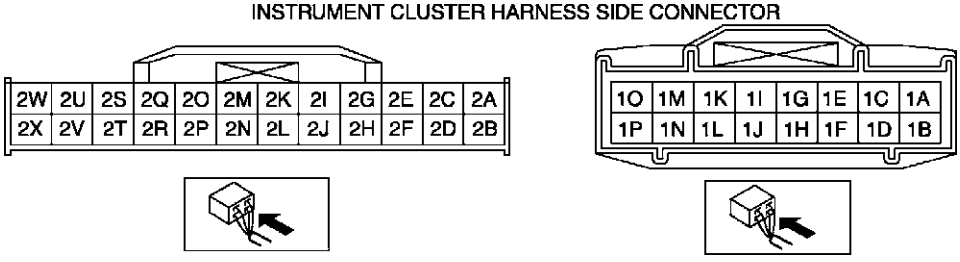

- When performing an asterisked (*) troubleshooting inspection, shake the wiring harness and connectors while doing the inspection to discover whether poor contact points are the cause of any intermittent malfunction. If there is a problem, check to make sure connectors, terminals and wiring harnesses are connected correctly and undamaged.

P

NO.2 NEITHER ABS WARNING LIGHT NOR BRAKE SYSTEM WARNING LIGHT ILLUMINATE WITH IGNITION SWITCH ON

A6E699067650W06

2	**Neither ABS warning light nor BRAKE system warning light illuminate with ignition switch on.**

[TROUBLESHOOTING HINTS]
- **Malfunction of instrument cluster or ABS/TCS HU/CM**
- **Improper configuration (instrument cluster)**

STEP	INSPECTION		ACTION
1	**VERIFY WHETHER MALFUNCTION IS IN WARNING LIGHTS AND INDICATOR LIGHTS' COMMON POWER SUPPLY, OR IN OTHER WARNING LIGHTS AND INDICATOR LIGHTS** • Do other warning and indicator lights illuminate when IG switch is turned ON?	Yes	Replace instrument cluster (open circuit in instrument cluster).
		No	Go to next step.
2	**INSPECT INSTRUMENT CLUSTER POWER SUPPLY FUSE** • Is instrument cluster ignition power supply fuse okay?	Yes	Go to next step.
		No	Check for a short to ground on blown fuse's circuit. Repair or replace as necessary. Install appropriate amperage fuse.
*3	**VERIFY WHETHER MALFUNCTION IS IN WIRING HARNESS (BETWEEN INSTRUMENT CLUSTER POWER SUPPLY AND INSTRUMENT CLUSTER FOR CONTINUITY) OR INSTRUMENT CLUSTER** • Turn ignition switch ON. • Measure voltage at instrument cluster connector (24-pin) terminal 2V. • Is voltage **approximately 12V?**	Yes	Replace instrument cluster (open circuit in instrument cluster).
		No	Check for open circuit between instrment cluster and ground. Repair or replace as neccessary.
4	**COMFIRM DTC U1900 USING WDS OR EQUIVALENT** • Retrieve DTC from PCM, ABS/TCS and instrument cluster. • Is DTC U1900 retrieved?	Yes	Go to next step.
		No	Inspect instrment cluster. If OK, then go to step6.
5	**COMFIRM THE FOLLOWING PIDs USING WDS OR EQUIVALENT:** • ABS_MSG • PCM_MSG • Is "not present" massage displayed on WDS or equivalent?	Yes	Replace instrument cluster (open circuit in instrument cluster).
		No	Network communication, for related system is malfunction. Repair or replace as neccessary.
6	**COMFIRM DTC B2477 FOR INSTRUMENT CLUSTER USING WDS OR EQUIVALENT** • Is DTC B2477 retrieved?	Yes	Re-configure the instrument cluster.
		No	Replace ABS/TCS HU/CM.

INSTRUMENT CLUSTER HARNESS SIDE CONNECTOR

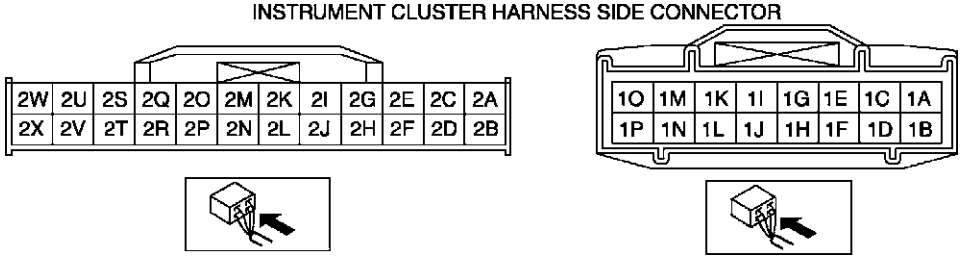

- When performing an asterisked (*) troubleshooting inspection, shake the wiring harness and connectors while doing the inspection to discover whether poor contact points are the cause of any intermittent malfunction. If there is a problem, check to make sure connectors, terminals and wiring harnesses are connected correctly and undamaged.

NO.3 ABS WARNING LIGHT DOES NOT ILLUMINATE WITH IGNITION SWITCH ON

A6E699067650W07

3	ABS warning light does not illuminate with ignition switch on.
[TROUBLESHOOTING HINTS] • **Malfunction of instrument cluster or ABS/TCS HU/CM**	

Diagnostic procedure

STEP	INSPECTION		ACTION
1	**COMFIRM DTC U1900 USING WDS OR EQUIVALENT** • Retrieve DTC from PCM, ABS/TCS and instrument cluster. • Is DTC U1900 retrieved?	Yes	Go to next step.
		No	Inspect instrment cluster. If OK, then go to step6.
2	**COMFIRM THE FOLLOWING PIDs USING WDS OR EQUIVALENT:** • ABS_MSG • PCM_MSG • Is “not present” massage displayed on WDS or equivalent?	Yes	Replace instrument cluster (open circuit in instrument cluster).
		No	Network communication, for related system is malfunction. Repair or replace as neccessary.

INSTRUMENT CLUSTER HARNESS SIDE CONNECTOR

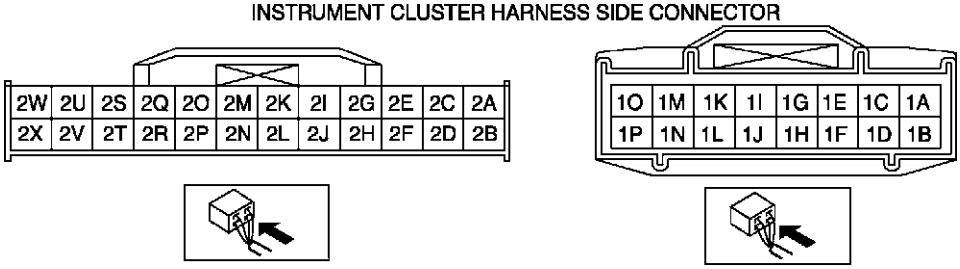

NO.4 BRAKE SYSTEM WARNING LIGHT DOES NOT ILLUMINATE WITH IGNITION SWITCH ON

A6E699067650W08

4	BRAKE system warning light does not illuminate with ignition switch on.
[TROUBLESHOOTING HINTS] • **Malfunction of instrument cluster or ABS/TCS HU/CM**	

STEP	INSPECTION		ACTION
1	**COMFIRM DTC U1900 USING WDS OR EQUIVALENT** • Retrieve DTC from PCM, ABS/TCS and instrument cluster. • Is DTC U1900 retrieved?	Yes	Go to next step.
		No	Inspect instrment cluster. If OK, then go to step6.
2	**COMFIRM THE FOLLOWING PIDs USING WDS OR EQUIVALENT:** • ABS_MSG • PCM_MSG • Is “not present” massage displayed on WDS or equivalent?	Yes	Replace instrument cluster (open circuit in instrument cluster).
		No	Network communication, for related system is malfunction. Repair or replace as neccessary.

INSTRUMENT CLUSTER HARNESS SIDE CONNECTOR

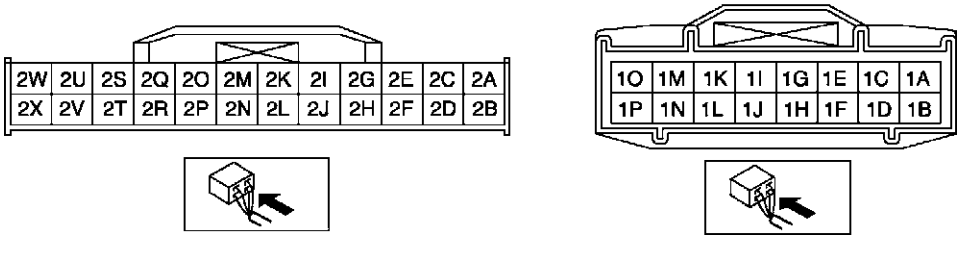

P

NO.5 TCS OFF LIGHT, TCS INDICATOR LIGHT DO NOT ILLUMINATE WITH IGNITION SWITCH ON

A6E699067650W09

5	TCS OFF light , TCS indicator light do not illuminate with ignition switch on.

[TROUBLESHOOTING HINTS]
- **Malfunction of instrument cluster or ABS/TCS HU/CM**
- **Improper configuration (ABS/TCS HU/CM)**

Diagnostic procedure

STEP	INSPECTION		ACTION
1	**INSPECT WIRING HARNESS BETWEEN ABS/ TCS HU/CM AND DLC-2 (DATA LINK CONNECTOR-2) FOR CONTINUITY AND SHORTS** Activate TRAC_OFF (TCS OFF light) using WDS or equivalent. Is error message displayed regarding communication between ABS/TCS CM and WDS or equivalent?	Yes	If a communication error message is displayed even after inspecting according to procedures displayed on the WDS or equivalent, go to Step 6.
		No	Go to next step.
2	**CHECK TCS OFF LIGHT BULB FOR MALFUNCTIONS BY USING INSPECTION FUNCTION IN ABS/TCS HU/CM** Activate TRAC_OFF (TCS OFF light) using WDS or equivalent Does TCS OFF light illuminate?	Yes	Go to next step.
		No	Go to next step3.
3	**COMFIRM DTC U1900 USING WDS OR EQUIVALENT** • Retrieve DTC from PCM, ABS/TCS and instrument cluster. • Is DTC U1900 retrieved?	Yes	Go to next step.
		No	Inspect instrment cluster. If OK, then go to step6.
4	**COMFIRM THE FOLLOWING PIDs USING WDS OR EQUIVALENT:** • ABS_MSG • PCM_MSG • Is “not present” massage displayed on WDS or equivalent?	Yes	Replace instrument cluster (open circuit in instrument cluster).
		No	Network communication, for related system is malfunction. Repair or replace as neccessary.
5	**COMFIRM DTC B2477 FOR INSTRUMENT CLUSTER USING WDS OR EQUIVALENT** • Is DTC B2477 retrieved?	Yes	Re-configure the instrument cluster.
		No	Replace ABS/TCS HU/CM.
*6	**INSPECT WIRING HARNESS BETWEEN ABS/ TCS CM AND DLC-2 (DATA LINK CONNECTOR-2) FOR CONTINUITY** Is there continuity between **SST** connector terminal X and data link connector?	Yes	Go to next step.
		No	Repair wiring harness between ABS/TCS HU/CM and data link connector.
*7	**INSPECT WIRING HARNESS BETWEEN ABS/ TCS HU/CM AND DLC-2 (DATA LINK CONNECTOR-2) FOR SHORT TO B+** Is voltage **approximately 12 V** at **SST** connector terminal X?	Yes	Repair wiring harness between ABS/TCS HU/CM and data link connector.
		No	Go to next step.
8	**INSPECT WIRING HARNESS BETWEEN ABS/ TCS HU/CM AND DLC-2 (DATA LINK CONNECTOR-2) FOR SHORT TO GROUND** If there continuity between **SST** connector terminal X and ground?	Yes	Repair wiring harness between ABS/TCS HU/CM and data link connector.
		No	Replace ABS/TCS HU/CM (communication circuit malfunction in ABS/TCS HU/CM).

STEP	INSPECTION	ACTION

ABS (ABS/TCS) HU/CM HARNESS SIDE CONNECTOR

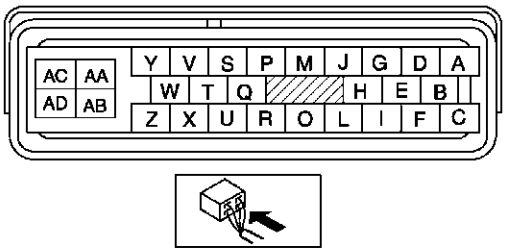

SST (49 G066 001) CONNECTOR

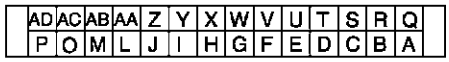



INSTRUMENT CLUSTER HARNESS SIDE CONNECTOR

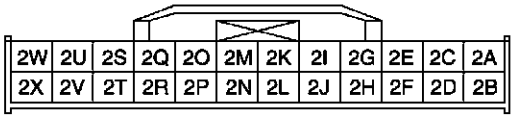

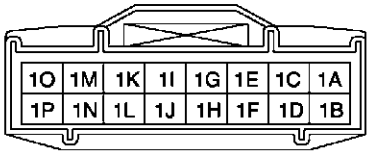

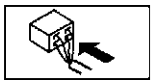

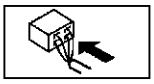

P

- When performing an asterisked (*) troubleshooting inspection, shake the wiring harness and connectors while doing the inspection to discover whether poor contact points are the cause of any intermittent malfunction. If there is a problem, check to make sure connectors, terminals and wiring harnesses are connected correctly and undamaged.

NO.6 BOTH ABS WARNING LIGHT AND BRAKE SYSTEM WARNING LIGHT STAY ON MORE THAN 4 SECONDS WITH IGNITION SWITCH ON

A6E699067650W10

6	**Both ABS warning light and BRAKE system warning light stay on more than 4 seconds with ignition switch on.**
[TROUBLESHOOTING HINTS] • **ABS/TCS HU/CM detects ABS proportioning system malfunction.** • **ABS/TCS HU/CM detects low voltage in power supply (ABS/TCS CM ingestion terminal Z voltage is below about 9 to 10 V).** • **ABS/TCS HU/CM does not operate.** • **Malfunction of communication network.**	

Diagnostic procedure

STEP	INSPECTION		ACTION
1	**INSPECT ABS/TCS HU/CM POWER SUPPLY FUSE** Is ABS/TCS HU/CM ignition power supply fuse okay?	Yes	Go to next step. Check for a short to ground on blown fuse's circuit.
		No	Repair or replace as necessary. Install appropriate amperage fuse.
2	**INSPECT WIRING HARNESS BETWEEN ABS/TCS HU/CM AND DLC-2 (DATA LINK CONNECTOR-2) FOR CONTINUITY AND SHORTS** Perform DTC inspection. Is error message displayed regarding communication between ABS/TCS HU/CM and WDS or equivalent?	Yes	If a communication error message is displayed even after inspecting according to procedure displayed on WDS or equivalent, go to step 8.
		No	Go to next step.
3	**CHECK FOR DTCS IN ABS/TCS HU/CM** Have DTCs been recorded in memory?	Yes	Perform inspection using appropriate DTC.
		No	Go to next step.

STEP	INSPECTION		ACTION
4	**INSPECT PID/DATA IN ABS/TCS HU/CM** Inspect the following items using WDS or equivalent PID/DATA monitor function. • ABS_LAMP (ABS warning light) • BRAKE_ LAMP (BRAKE system warning light) • ABS_VOLT (power supply voltage) Is ABS_LAMP and BRAKE_LAMP ON after **more than 4 seconds** with ignition switch on?	Yes	Go to Step 7.
		No	Go to next step.
5	**INSPECT ABS/TCS HU/CM IGNITION POWER SUPPLY SYSTEM (TERMINAL Z)** Check the voltage for PID/DATA monitor ABS_VOLT item. **Specification: about 10 V** Is voltage within specification?	Yes	Replace ABS/TCS HU/CM (open or short in ground circuit in ABS/TCS HU/CM)
		No	Go to next step.
6	**INSPECT BATTERY** Is battery voltage normal?	Yes	Go to next step.
		No	Inspect battery and charging system.
7	**INSPECT CHARGING SYSTEM** Is battery voltage normal with electrical load (A/C, headlight, etc.) on and engine idling?	Yes	Go to Step 7.
		No	Inspect charging system (drive belt tension, generator, etc.).
*8	**INSPECT WIRING HARNESS BETWEEN ABS/TCS HU/CM POWER SUPPLY AND ABS/TCS HU/CM FOR CONTINUITY** Disconnect ABS/TCS HU/CM connector. Connect the **SST** (49 G066 001) (vehicle harness side only). Is voltage **approximately 12 V** at SST connector terminal Z?	Yes	Go to next step.
		No	Check for connection of ABS/TCS HU/CM connector securely.
*9	**INSPECT WIRING HARNESS BETWEEN ABS/TCS HU/CM GROUND FOR CONTINUITY** Turn ignition switch to LOCK. Is there continuity between **SST** connector terminal AC and ground?	Yes	If a malfunction error message is displayed on WDS or equivalent in Step 1 inspection, go to next step. If a malfunction error message is not displayed on WDS or equivalent in Step 1 inspection, troubleshooting is completed.
		No	Repair wiring harness between ABS/TCS HU/CM and ground.
*10	**INSPECT WIRING HARNESS BETWEEN ABS/TCS HU/CM AND DLC-2 (DATA LINK CONNECTOR-2) FOR CONTINUITY** Is there continuity between **SST** connector terminal X and DLC-2?	Yes	Go to next step.
		No	Repair wiring harness between ABS/TCS HU/CM and DLC-2.
11	***INSPECT WIRING HARNESS BETWEEN ABS/TCS HU/CM AND DLC-2 (DATA LINK CONNECTOR-2) FOR SHORT TO BATTERY** Is voltage **approximately 12 V** at SST connector terminal X?	Yes	Repair wiring harness between ABS/TCS HU/CM and DLC-2.
		No	Go to next step.
12	***INSPECT WIRING HARNESS BETWEEN ABS/TCS HU/CM AND DLC-2 (DATA LINK CONNECTOR-2) FOR SHORT TO GROUND** Is there continuity between **SST** connector Terminal X and DLC-2?	Yes	Repair wiring harness between ABS/TCS HU/CM and DLC-2.
		No	Replace ABS/TCS HU/CM (communication circuit malfunction in ABS/TCS HU/CM)

STEP	INSPECTION	ACTION

ABS (ABS/TCS) HU/CM HARNESS SIDE CONNECTOR

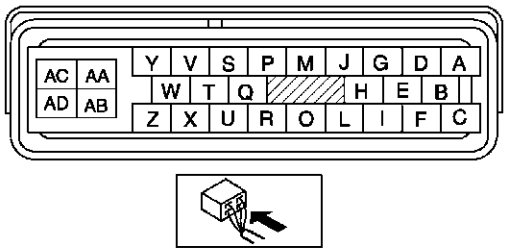

SST (49 G066 001) CONNECTOR

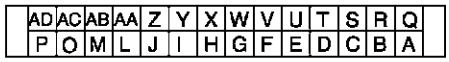



INSTRUMENT CLUSTER HARNESS SIDE CONNECTOR

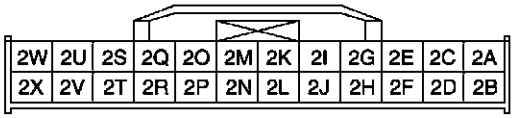

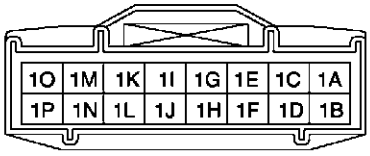

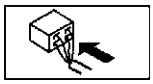

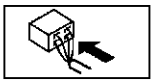

P

NO.7 ABS WARNING LIGHT STAYS ON MORE THAN 4 SECONDS WITH IGNITION SWITCH ON

A6E699067650W11

7	ABS warning light stays on more than 4 seconds with ignition switch on.

[TROUBLESHOOTING HINTS]
- **ABS/TCS CM detects ABS system malfunction.**

Diagnostic procedure

STEP	INSPECTION		ACTION
1	**INSPECT WIRING HARNESS BETWEEN ABS/ TCS HU/CM AND DLC-2 (DATA LINK CONNECTOR-2) FOR CONTINUITY AND SHORTS** Perform DTC inspection. Is error message displayed regarding communication between ABS/TCS HU/CM and WDS or equivalent?	Yes	If the communication error message is displayed even after inspecting according to procedures displayed in the WDS or equivalent, go to Step 4.
		No	Go to next step.
2	**CHECK FOR DTCs IN ABS/TCS HU/CM** Have DTCs been recorded in memory?	Yes	Perform inspection using appropriate DTC.
		No	Go to next step.
3	**INSPECT PID/DATA IN ABS/TCS HU/CM** Inspect the following items using WDS or equivalent PID/DATA monitor function. • ABS_LAMP (ABS warning light) Is ABS_LAMP ON after **more than 4 seconds** with ignition switch on?	Yes	Replace ABS/TCS HU/CM (open circuit or short to ground in ABS/TCS HU/CM).
		No	Inspect instrment cluster.
*4	**INSPECT WIRING HARNESS BETWEEN ABS/ TCS HU/CM AND DLC-2 (DATA LINK CONNECTOR-2) FOR CONTINUITY** Disconnect ABS/TCS HU/CM connector. Connect the **SST** (49 G066 001) (vehicle harness side only). Is there continuity between **SST** connector terminal X and data link connector?	Yes	Go to next step.
		No	Repair wiring harness between ABS/TCS HU/CM and data link connector.
*5	**INSPECT WIRING HARNESS BETWEEN ABS/ TCS HU/CM AND DLC-2 (DATA LINK CONNECTOR-2) FOR SHORT TO B+** Is voltage **approximately 12V** at **SST** connector terminal X?	Yes	Repair wiring harness between ABS/TCS HU/CM and data link connector.
		No	Go to next step.

STEP	INSPECTION		ACTION
*6	**INSPECT WIRING HARNESS BETWEEN ABS/TCS HU/CM AND DLC-2 (DATA LINK CONNECTOR-2) FOR SHORT TO GROUND** Is there continuity between **SST** connector terminal X and ground?	Yes	Repair wiring harness between ABS/TCS HU/CM and data link connector.
		No	Replace ABS/TCS HU/CM (communication circuit malfunction is ABS/TCS HU/CM).

ABS (ABS/TCS) HU/CM HARNESS SIDE CONNECTOR

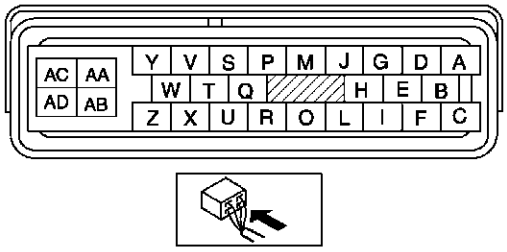

SST (49 G066 001) CONNECTOR

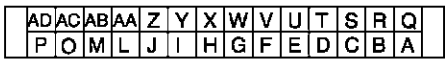

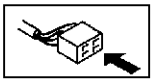

INSTRUMENT CLUSTER HARNESS SIDE CONNECTOR

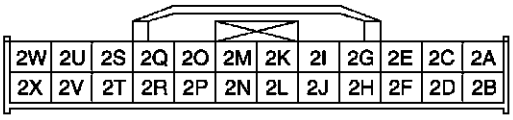

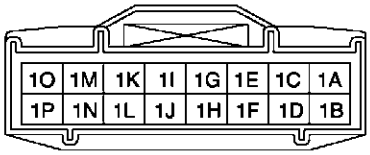

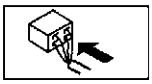

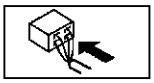

- When performing an asterisked (*) troubleshooting inspection, shake the wiring harness and connectors while doing the inspection to discover whether poor contact points are the cause of any intermittent malfunction. If there is a problem, check to make sure connectors, terminals and wiring harnesses are connected correctly and undamaged.

NO.8 BRAKE SYSTEM WARNING LIGHT STAYS ON MORE THAN 4 SECONDS WITH IGNITION SWITCH ON

A6E699067650W12

8	**BRAKE system warning light stays on more than 4 seconds with ignition switch on. (Parking brake is released.)**
[TROUBLESHOOTING HINTS] • **Malfunction of instrment cluster or ABS/TCS HU/CM** • **Short to ground in circuit in parking brake switch and/or brake fluid level sensor**	

Diagnostic procedure

1	**INSPECT BRAKE FLUID LEVEL** Is brake fluid level okay?	Yes	Go to next step.
		No	Add brake fluid.
*2	**INSPECT WIRING HARNESS BETWEEN ABS/TCS HU/CM AND DLC-2 (DATA LINK CONNECTOR-2) FOR CONTINUITY AND SHORTS** Inspect the following items using WDS or equivalent PID/DATA monitor function. • BRAKE_LAMP(BRAKE system warning light) Is error message displayed regarding communication between ABS/TCS HU/CM and WDS or equivalent?	Yes	If a communication error message is displayed even after inspecting according to procedures displayed on WDS or equivalent. Go to next step6.
		No	Go to next step.
3	**CHECK FOR DTCs IN ABS/TCS HU/CM** Have DTCs been recorded in memory?	Yes	Perform inspection using appropriate DTC.
		No	Go to next step.

4	**INSPECT PID/DATA IN ABS/TCS HU/CM** Inspect (BRAKE system warning light) using WDS or equivalent PID/DATA monitor function. Is BRAKE_LAMP on after **more than 4 seconds** with ignition switch on?	Yes	Connect ABS/TCS HU/CM connector terminal X securely, then go to next step.
		No	Go to step 6.
5	**VERIFY WHETHER MALFUNCTION IS IN PARKING BRAKE SWITCH OR BRAKE FLUID LEVEL SENSOR, OR IN SOME OTHER PART** Disconnect the following in order: 1. Parking brake switch connector 2. Brake fluid level sensor connector Does BRAKE system warning light go out with ignition switch on?	Yes	Replace parking brake switch and/or brake fluid level sensor (shorted on some internal part).
		No	Perform the following inspections. Repair if necessary. • Short to ground in wiring harness between instrument cluster (BRAKE system warning light) and parking brake switch. • Short to ground in wiring harness between instrument cluster (BRAKE system warning light) and brake fluid level sensor. Inspect instrument cluster.
*6	**INSPECT WIRING HARNESS BETWEEN ABS/TCS HU/CM AND DLC-2 (DATA LINK CONNECTOR-2) FOR CONTINUITY** Disconnect ABS/TCS HU/CM connector. Connect the **SST** (49 G066 001) (vehicle harness side only). Is there continuity between **SST** connector terminal X and data link connector?	Yes	Go to next step.
		No	Repair wiring harness between ABS/TCS HU/CM and data link connector.
*7	**INSPECT WIRING HARNESS BETWEEN ABS/TCS HU/CM AND DLC-2 (DATA LINK CONNECTOR-2) FOR SHORT TO B+** Is voltage **approximately 12 V** at **SST** connector terminal X?	Yes	Repair wiring harness between ABS/TCS HU/CM and data link connector.
		No	Go to next step.
*8	**INSPECT WIRING HARNESS BETWEEN ABS/TCS HU/CM AND DLC-2 (DATA LINK CONNECTOR-2) FOR SHORT TO GROUND** Is there continuity between **SST** connector terminal X and ground?	Yes	Repair wiring harness between ABS/TCS HU/CM and data link connector.
		No	Replace ABS/TCS HU/CM (communication circuit malfunction in ABS/TCS HU/CM).

ABS (ABS/TCS) HU/CM HARNESS SIDE CONNECTOR

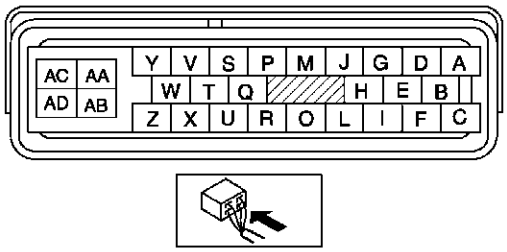

SST (49 G066 001) CONNECTOR

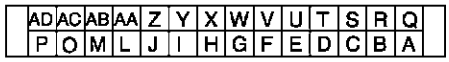

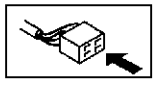

INSTRUMENT CLUSTER HARNESS SIDE CONNECTOR

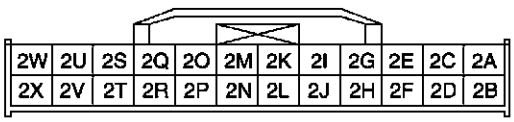

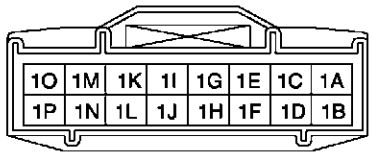

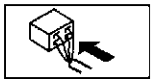

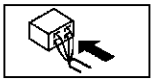

- When performing an asterisked (*) troubleshooting inspection, shake the wiring harness and connectors while doing the inspection to discover whether poor contact points are the cause of any intermittent malfunction. If there is a problem, check to make sure connectors, terminals and wiring harnesses are connected correctly and undamaged.

NO.9 TCS OFF LIGHT STAYS ON MORE THAN 4 SECONDS WITH IGNITION SWITCH ON

A6E699067650W13

9	**BRAKE system warning light stays on more than 4 seconds with ignition switch on. (Parking brake is released.)**
[TROUBLESHOOTING HINTS] • **Warning light circuit open or shorted to ground in ABS/TCS HU/CM**	

1	**INSPECT WIRING HARNESS BETWEEN ABS/TCS HU/CM AND DLC-2 (DATA LINK CONNECTOR-2) FOR CONTINUITY AND SHORTS** Perform DTC inspection. Is error message displayed regarding communication between ABS/TCS HU/CM and WDS or equivalent?	Yes	If a communication error message is displayed even after inspecting according to procedures displayed on WDS or equivalent, go to Step 7.
		No	Go to next step.
2	**CHECK FOR DTCS IN ABS/TCS HU/CM** Have DTCs been recorded in memory?	Yes	Perform inspection using appropriate DTC.
		No	Go to next step.
3	**INSPECT PID/DATA IN ABS/TCS HU/CM** Inspect the following items using WDS or equivalent PID/DATA monitor function. • **TRAC_SW** (TCS OFF switch) Is **TRAC_SW** ON displayed on WDS or equivalent?	Yes	Go to Step 5 (TCS OFF switch system malfunction).
		No	Go to next step.
*4	**CHECK FOR SHORT TO GROUND IN ABS/TCS HU/CM** Disconnect ABS/TCS HU/CM connector. Does TCS OFF light go out with ignition switch on?	Yes	Replace ABS/TCS HU/CM (short to ground in ABS/TCS HU/CM).
		No	Inspect instrument cluster.
*5	**INSPECT TCS OFF SWITCH** Disconnect TCS OFF switch connector. Is TRAC_SW ON displayed on WDS or equivalent?	Yes	Go to next step.
		No	Replace TCS OFF switch (TCS will not turn off, even though switch is OFF).
*6	**VERIFY WHETHER MALFUNCTION IS IN WIRING HARNESS (BETWEEN ABS/TCS HU/CM AND TCS OFF SWITCH FOR SHORT TO GROUND) OR ABS/TCS HU/CM** Is there continuity between **SST** connector terminal P and ground?	Yes	Repair wiring harness between ABS/TCS HU/CM (terminal P) and TCS OFF switch.
*7	**INSPECT WIRING HARNESS BETWEEN ABS/TCS HU/CM AND DLC-2 (DATA LINK CONNECTOR-2) FOR SHORT TO B+** Is voltage **approximately 12 V** at **SST** connector terminal T?	Yes	Repair wiring harness between ABS/TCS HU/CM (terminal P) and data link connector.
		No	Go to next step.
*8	**INSPECT WIRING HARNESS BETWEEN ABS/TCS HU/CM AND DLC-2 (DATA LINK CONNECTOR-2) FOR SHORT TO GROUND** Is there continuity between **SST** connector terminal T and ground?	Yes	Repair wiring harness between ABS/TCS HU/CM and data link connector.
		No	Replace ABS/TCS HU/CM (communication circuit malfunction in ABS/TCS HU/CM).

ABS (ABS/TCS) HU/CM HARNESS SIDE CONNECTOR

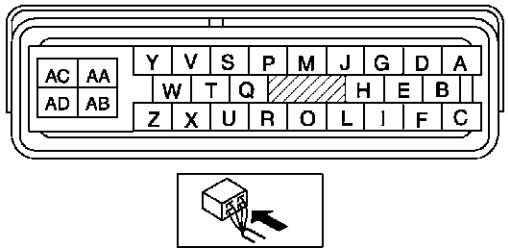

SST (49 G066 001) CONNECTOR

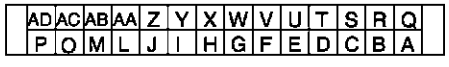

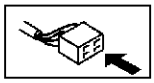

- When performing an asterisked (*) troubleshooting inspection, shake the wiring harness and connectors while doing the inspection to discover whether poor contact points are the cause of any intermittent malfunction. If there is a problem, check to make sure connectors, terminals and wiring harnesses are connected correctly and undamaged.

NO.10 TCS DOES NOT WORK CORRECTLY

A6E699067650W14

10	TCS does not work correctly.

[TROUBLESHOOTING HINTS]
- **There is difference in size or air pressure between the front and rear tires**.
- **There is malfunction in the engine control system.**
- **ABS/TCS HU/CM detects TCS system malfunction**.

Diagnostic procedure

STEP	INSPECTION		ACTION
1	**CHECK TIRE SIZE AND AIR PRESSURE** Inspect tire size and air pressure. Are size and air pressure as specified?	Yes	Go to next step.
		No	Replace with specified tires or adjust tire air pressure.
2	**CHECK FOR DTCS IN ABS/TCS HU/CM** Have DTCs been recorded in memory?	Yes	Perform inspection using appropriate DTC.
		No	Go to next step.
3	**CHECK FOR DTCS IN PCM** Check the DTC for the PCM ON-BOARD DIAGNOSTIC SYSTEM. Have DTCs been recorded in memory?	Yes	Perform inspection using appropriate DTC.
		No	Go to next step.
4	**CHECK TO MAKE SURE TORQUE REDUCTION SIGNAL GOING FROM ABS/TCS HU/CM TO PCM IS BEING RECEIVED CORRECTLY** Select ENG _ TRQ (engine torque reduction signal) using WDS or equivalent. Increase the engine speed to 3,000 rpm. Input 280 N·m ENG _ TRQ to PCM using WDS or equivalent. Does engine speed decrease?	Yes	System is normal. Recheck customer's complaint.
		No	Replace ABS/TCS HU/CM.

NO.11 THERE IS MALFUNCTION IN THE SYSTEM EVEN THOUGH ABS WARNING LIGHT, BRAKE SYSTEM WARNING LIGHT, TCS OFF LIGHT, TCS INDICATOR LIGHT DO NOT ILLUMINTE

A6E699067650W15

11	There is a malfunction in system even though ABS warning light, BRAKE system warning light, TCS OFF light, TCS indicator light do not illuminate.

[TROUBLESHOOTING HINTS]
- **There is a difference in size or air pressure between the front and rear tires**

Diagnostic procedure

STEP	INSPECTION		ACTION
1	**CHECK FOR DTCs IN ABS/TCS HU/CM** Have DTCs been recorded in memory?	Yes	Perform inspection using appropriate DTC.
		No	Go to next step.
2	**INSPECT ABS HYDRAULIC UNIT** Perform "ABS hydraulic unit system inspection". Is system okay?	Yes	Inspect conventional brake system.
		No	**If wheels do not rotate:** Replace ABS/TCS HU/CM. **If wheels rotate but order in which wheels rotate is incorrect:** Inspect brake pipe passage to ABS/TCS HU/CM.

NO.1 ANY OF THE FOLLOWING LIGHTS DO NOT ILLUMINATE WITH IGNITION SWITCH ON: (ABS WARNING LIGHT, BRAKE SYSTEM WARNING LIGHT, DSC INDICATOR LIGHT AND/OR DSC OFF LIGHT)

A6E699067650W16

1	Any of the following lights do not illuminate with ignition switch on: (ABS warning light, BRAKE system warning light, DSC indicator light and/or DSC OFF light).

[TROUBLESHOOTING HINTS]
- **Check each light in the instrument cluster for malfunction**.
- **Poor connection at DSC HU/CM connector**
- **ABS warning light circuit or BRAKE system warning light circuit shorted out (when harness is shorted out between DSC HU/CM and ABS warning light or BRAKE system warning light, each warning lights go off.)**
- **DSC indicator light circuit and/or DSC OFF light circuit may be open**. **(when DSC indicator light circuit and/or DSC OFF light circuit is open, each circuit's warning lights go off.)**

P

Diagnostic procedure

STEP	INSPECTION		ACTION
1	**CHECK FOR DTCS IN DSC HU/CM** • Check the DTC for the DSC ON-BOARD DIAGNOSTIC SYSTEM. • Have DTCs been recorded in memory?	Yes	Perform inspection using appropriate DTC.
		No	Go to next step.
2	**CHECK TO SEE WHETHER MALFUNCTION IS IN INSTRUMENT CLUSTER SYSTEM OR OTHER SYSTEM** • Do other warning and indicator lights illuminate when IG switch is turned ON?	Yes	Go to next step.
		No	Inspect or repair instrument cluster (power supply system, ground system).
3	**VERIFY THAT DSC HU/CM CONNECTOR IS CONNECTED** • Is DSC HU/CM securely connected?	Yes	Go to next step.
		No	Connect DSC HU/CM connector securely, then go to next step.
4	**VERIFY THAT DSC HU/CM CONNECTOR TERMINAL OR RELATED CONNECTOR TERMINALS ARE CONNECTED** • Are DSC HU/CM connector terminal, or instrument cluster connector terminal, or related connector terminals securely connected?	Yes	Go to next step.
		No	Connect DSC HU/CM connector terminal etc. related connector terminal securely.
5	**CHECK TO SEE WHETHER MALUNCTION IS IN DSC INDICATOR LIGHT AND TCS OFF LIGHT OR ABS WARNING LIGHT AND BRAKE SYSTEM WARNING LIGHT** • If DSC indicator light and TCS OFF light do not illuminate, go to Step 6. • If ABS warning light and BRAKE system warning light do not illuminate, go to Step 8.	-	-
6	**CHECK TO SEE WHETHER MALFUNCTION IS IN DSC HU/CM OR OTHER** • Disconnect DSC HU/CM. • Connect the DSC indicator light terminal and DSC OFF light terminal to body ground. • Do both indicator lights illuminate with ignition switch on?	Yes	Replace DSC HU/CM (open in DSC HU/CM).
		No	Go to next step.
7	**INSPECT WIRING HARNESS BETWEEN INSTRUMENT CLUSTER AND DSC HU/CM FOR CONTINUITY** • Is there continuity between each indicator light terminals of instrument cluster and DSC HU/CM connector terminal?	Yes	Inspect or repair indicator light circuit in instrument cluster.
		No	Repair malfunctioning part.
8	**CHECK TO SEE WHETHER MALFUNCTION IS IN DSC HU/CM OR OTHER** • Disconnect DSC HU/CM and turn ignition switch on. • Do ABS warning light and BRAKE system warning lights illuminate with ignition switch on? (If above lights illuminate, both lights circuits are normal.)	Yes	Replace DSC HU/CM (short in DSC HU/CM).
		No	Go to next step.
9	**INSPECT WIRING HARNESS BETWEEN INSTRUMENT CLUSTER AND DSC HU/CM FOR SHORT** • Is there continuity between each warning light terminal of DSC HU/CM and ground?	Yes	Repair malfunctioning part.
		No	Inspect or repair warning light circuit in instrument cluster.

NO.2 ANY OF THE FOLLOWING LIGHTS STAY ON: (ABS WARNING LIGHT, BRAKE SYSTEM WARNING LIGHT, DSC INDICATOR LIGHT AND/OR DSC OFF LIGHT)

A6E699067650W17

2	Any of the following lights stay on: (ABS warning light, BRAKE system warning light, DSC indicator light and/or DSC OFF light)

[TROUBLESHOOTING HINTS]
- **Brake fluid amount is low**.
- **Parking brake does not release**.
- **No connection at DSC HU/CM connector (when DSC HU/CM connector comes off, ABS warning light and BRAKE system warning light illuminate.)**
- **DSC HU/CM detected malfunction (input and output device malfunction)**
- **DSC HU/CM detects low voltage in power supply**.
- **DSC HU/CM ground malfunction (when DSC HU/CM ground is not securely connected, ABS warning light and BRAKE system warning light illuminate but diagnostic trouble code does not display)**
- **DSC HU/CM does not operate (DSC HU/CM malfunction.)**
- **DSC OFF light circuit shorted in ground (when DSC OFF circuit is shorted in ground, DSC OFF light illuminated.)**
- **ABS warning light circuit or BRAKE system warning light circuit open (when the harness is open between DSC HU/CM and each warning light, each warning light illuminates)**

Diagnostic procedure

STEP	INSPECTION		ACTION
1	**INSPECT BRAKE FLUID AMOUNT AND VERIFY THAT PARKING BRAKE RELEASES** • Is brake fluid amount normal? • Is parking brake lever released?	Yes	Go to next step.
		No	Add brake fluid or release parking brake lever.
2	**CHECK FOR DTCS IN DSC HU/CM** • Check the DTC for the DSC ON-BOARD DIAGNOSTIC SYSTEM. • Have DTCs been recorded in memory?	Yes	Perform inspection using appropriate DTC.
		No	Go to next step.
3	**CHECK TO SEE WHETHER MALFUNCTION IS IN CONTROL MODULE CONNECTOR, TERMINAL OR OTHER** • Do ABS warning light and BRAKE system warning light go off after **4 seconds** with ignition switch on?	Yes	Temporary poor connection in control module connector. Inspect DSC HU/CM connector, then go to Step 6. Inspect DSC HU/CM connector terminal, then go to Step 7.
		No	Go to next step.
4	**INSPECT BATTERY** • Is battery voltage normal?	Yes	Go to next step.
		No	Inspect battery and charging system.
5	**INSPECT CHARGING SYSTEM** • Is battery voltage normal with electrical load (A/C, headlight, etc.) on and engine idling?	Yes	Go to next step.
		No	Inspect charging system (drive belt tension, generator, etc.).
6	**VERIFY THAT DSC HU/CM CONNECTOR IS CONNECTED** • Is DSC HU/CM securely connected?	Yes	Go to next step.
		No	Connect DSC HU/CM connector securely, then go to next step.
7	**VERIFY THAT DSC HU/CM CONNECTOR TERMINAL OR RELATED CONNECTOR TERMINALS ARE CONNECTED** • Are DSC HU/CM connector terminal or instrument cluster connector terminal etc. related connector terminals securely connected?	Yes	Go to next step.
		No	Connect DSC HU/CM connector terminal etc. related connector terminals securely.
8	**INSPECT WIRING HARNESS BETWEEN INSTRUMENT CLUSTER AND DSC HU/CM FOR CONTINUITY** • Is there continuity between each warning light terminal of instrument cluster and DSC HU/CM connector terminal?	Yes	Go to next step.
		No	Repair malfunctioning part.
9	**INSPECT WIRING HARNESS BETWEEN INSTRUMENT CLUSTER AND DSC HU/CM FOR SHORT IN GROUND** • Is there continuity between each indicator light terminal of DSC HU/CM and ground?	Yes	Repair malfunctioning part.
		No	Inspect power supply harness and ground harness of DSC HU/CM. If above wiring harness are okay, replace DSC HU/CM. If above wiring harness are malfunctioning, repair malfunctioning wiring harness.

P

NO.3 THERE IS A MALFUNCTION IN THE SYSTEM EVEN THOUGH ABS WARNING LIGHT, BRAKE SYSTEM WARNING LIGHT, DSC INDICATOR LIGHT AND DSC OFF LIGHT DO NOT ILLUMINATE

A6E699067650W18

3	**There is a malfunction in the system even though ABS warning light, BRAKE system warning light, DSC indicator light and DSC OFF light do not illuminate.**
[TROUBLESHOOTING HINTS] • **There is mechanical malfunction in system**.	

Diagnostic procedure

STEP	INSPECTION		ACTION
1	**CHECK DSC HU/CM FOR DTCs** • Check the DTC for the DSC ON-BOARD DIAGNOSTIC SYSTEM. • Have DTCs been recorded in memory?	Yes	Perform inspection using appropriate DTC.
		No	Go to next step.
2	**INSPECT DSC SYSTEM** • Perform DSC system inspection. • Is the system okay?	Yes	Inspect conventional brake system.
		No	Repair or replace malfunctioning part.

NO.4 ABS OR TCS*1 OPERATES FREQUENTLY/TCS DOES NOT WORK CORRECTLY*1: DSC SYSTEM FUNCTION CONTAINS TRACTION CONTROL FUNCTION, DSC INDICATOR LIGHT GOES ON AND OFF WHILE DSC OPERATES

A6E699067650W19

4	**ABS or TCS (*1) operates frequently./TCS does not work correctly.** **(*1): DSC system function contains traction control function, DSC indicator light goes on and off while DSC operates.**
[TROUBLESHOOTING HINTS] • **There is difference in size or air pressure between the front and rear tires**. • **Incorrect ABS wheel-speed signal is inputted to DSC HU/CM**. • **There is malfunction in the engine control system (TCS malfunction.)**	

Diagnostic procedure

STEP	INSPECTION		ACTION
1	**CHECK FOR DTCS IN DSC HU/CM** • Check the DTC for the DSC ON-BOARD DIAGNOSTIC SYSTEM. • Have DTCs been recorded in memory?	Yes	Perform inspection using appropriate DTC.
		No	Go to next step.
2	**CHECK TIRE SIZE AND AIR PRESSURE** • Inspect tire size and air pressure. • Are size and air pressure as specified?	Yes	Go to next step.
		No	Replace with specified tires and adjust tire air pressure.
3	**INSPECT ABS WHEEL-SPEED SENSOR OUTPUT PULSE** • Start engine and drive vehicle. • Inspect output voltage pattern using WDS or equivalent (oscilloscope). • Is output voltage pattern okay? 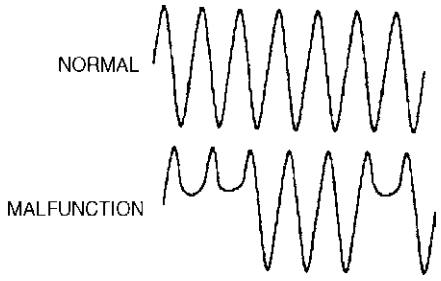	Yes	Found malfunctioning part according to “INTERMITTENT CONCERN TROUBLESHOOTING”.
		No	• ABS wheel-speed sensor installation inspection: Inspect the sensor for looseness and confirm it is securely adhered. • Sensor rotor installation inspection: Inspect the sensor rotor for poor installation and chipping of sensor rotor teeth. (If sensor rotor is installed poorly, it may cause output of abnormal wave form at high speed.)

NO.5 DSC*2 OPERATES FREQUENTLY/DSC DOES NOT WORK CORRECTLY*2: DSC INDICATOR LIGHT GOES ON AND OFF WHILE DSC OPERATES

A6E699067650W20

5	**DSC (*2) operates frequently. /DSC does not work correctly. (*2): DSC indicator light goes on and off while DSC operates.**
[TROUBLESHOOTING HINTS] • DSC HU/CM detected malfunction (input and output device malfunction) • Poor installation with combine sensor and/or steering angle sensor (If any of the above sensors are poorly installed, DSC may operate intermittently.) • When replacing DSC HU/CM, combine sensor or steering angle sensor, initialization is not performed. (If initialization is not performed correctly, DSC may not work correctly.)	

Diagnostic procedure

STEP	INSPECTION		ACTION
1	**CHECK DSC HU/CM FOR DTCs** • Check the DTC for the DSC ON-BOARD DIAGNOSTIC SYSTEM. • Have DTCs been recorded in memory?	Yes	Perform inspection using appropriate DTC.
		No	Go to next step.
2	**VERIFY THAT EACH SENSOR IS INSTALLED** • Are yaw rate sensor, lateral-G sensor and steering angle sensor securely installed?	Yes	Go to next step.
		No	Install malfunctioning sensor securely.
*3	**VERIFY THAT EACH SENSOR IS INITIALIZED** • Did each sensor initialize after replacement of DTC unit, yaw rate sensor, lateral-G sensor or steering angle sensor?	Yes	Find malfunctioning part according to “INTERMITTENT CONCERN TROUBLESHOOTING.”
		No	Perform initialization.

P

SUSPENSION

LOCATION INDEX R-2
FRONT SUSPENSION LOCATION INDEX R-2
REAR SUSPENSION LOCATION INDEX R-3
GENERAL PROCEDURES R-4
PRECAUTION (SUSPENSION) R-4
WHEEL ALIGNMENT R-4
WHEEL ALIGNMENT PRE-INSPECTION R-4
FRONT WHEEL ALIGNMENT R-5
REAR WHEEL ALIGNMENT R-6
WHEEL AND TIRE R-7
WHEEL BALANCE ADJUSTMENT (16 INCH AND 17 INCH ALUMINUM ALL WHEEL) R-7
FRONT SUSPENSION R-9
FRONT SHOCK ABSORBER AND SPRING REMOVAL/INSTALLATION R-9
FRONT SHOCK ABSORBER INSPECTION R-12
FRONT SHOCK ABSORBER DISPOSAL R-12
FRONT UPPER ARM REMOVAL/INSTALLATION R-13
FRONT UPPER ARM INSPECTION R-14
FRONT LOWER ARM (FRONT) REMOVAL/INSTALLATION R-15
FRONT LOWER ARM (FRONT) INSPECTION R-18
FRONT LOWER ARM (REAR) REMOVAL/INSTALLATION R-19
FRONT LOWER ARM (REAR) INSPECTION R-21
FRONT STABILIZER REMOVAL/INSTALLATION R-22
STABILIZER CONTROL LINK INSPECTION R-23
FRONT CROSSMEMBER REMOVAL/INSTALLATION R-23
TRANSVERSE MEMBER REMOVAL/INSTALLATION R-27
REAR SUSPENSION R-28
REAR SHOCK ABSORBER REMOVAL/INSTALLATION R-28
REAR SHOCK ABSORBER INSPECTION R-28
REAR SHOCK ABSORBER DISPOSAL R-28
REAR COIL SPRING REMOVAL/INSTALLATION R-29
REAR LOWER ARM REMOVAL/INSTALLATION R-30
REAR UPPER ARM REMOVAL/INSTALLATION R-31
REAR LATERAL LINK REMOVAL/INSTALLATION R-33
REAR STABILIZER REMOVAL/INSTALLATION R-34
STABILIZER CONTROL LINK INSPECTION R-35
TRAILING LINK REMOVAL/INSTALLATION R-35
REAR CROSSMEMBER REMOVAL/INSTALLATION R-37

LOCATION INDEX

FRONT SUSPENSION LOCATION INDEX

A6E740001015W01

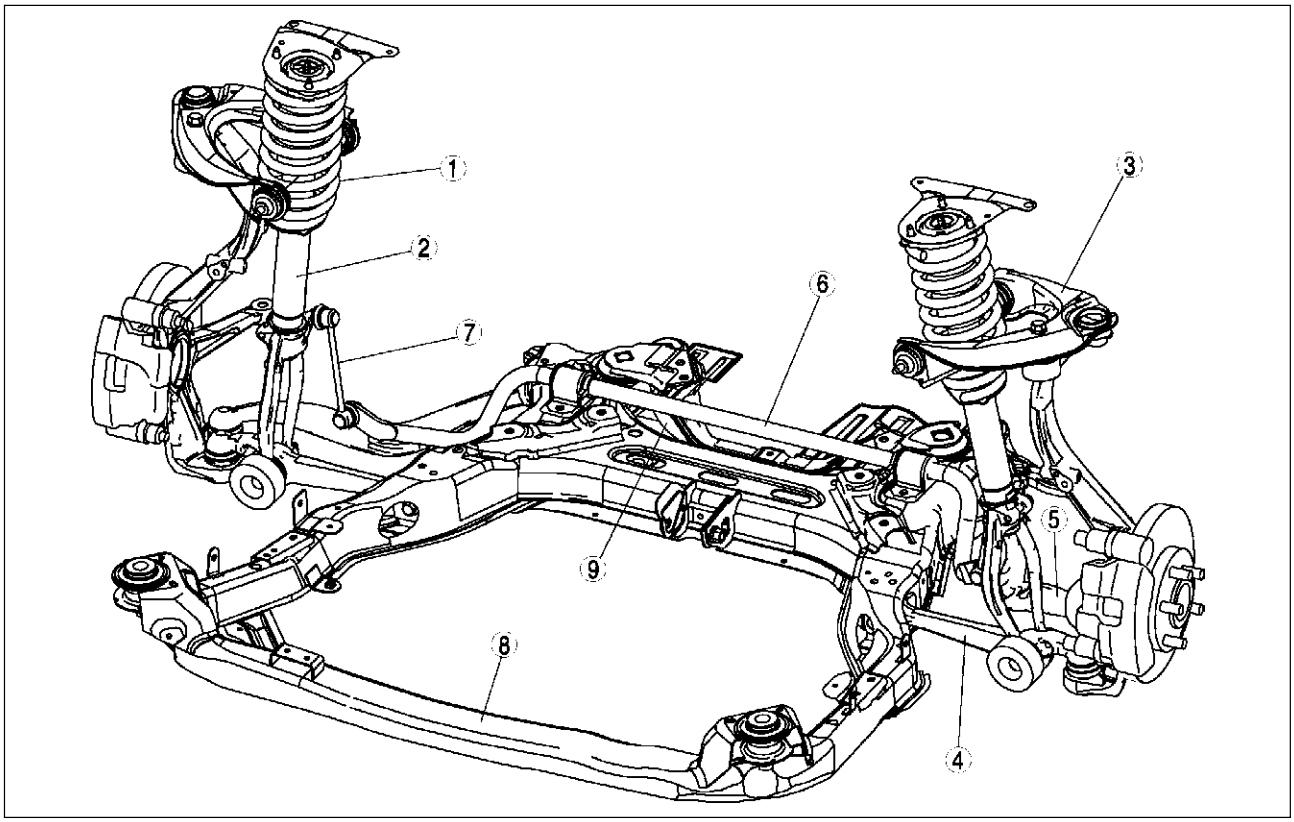

A6E7414W033

1	Front shock absorber and coil spring (See R–9 FRONT SHOCK ABSORBER AND SPRING REMOVAL/INSTALLATION)
2	Front shock absorber (See R–12 FRONT SHOCK ABSORBER INSPECTION) (SeeR–12 FRONT SHOCK ABSORBER DISPOSAL)
3	Front upper arm (See R–13 FRONT UPPER ARM REMOVAL/ INSTALLATION) (See R–14 FRONT UPPER ARM INSPECTION)
4	Front lower arm (front) (See R–15 FRONT LOWER ARM (FRONT) REMOVAL/INSTALLATION) (See R–18 FRONT LOWER ARM (FRONT) INSPECTION)

5	Front lower arm (rear) (See R–19 FRONT LOWER ARM (REAR) REMOVAL/INSTALLATION) (See R–21 FRONT LOWER ARM (REAR) INSPECTION)
6	Front stabilizer (See R–22 FRONT STABILIZER REMOVAL/ INSTALLATION)
7	Stabilizer control link (See R–23 STABILIZER CONTROL LINK INSPECTION)
8	Front crossmember (See R–23 FRONT CROSSMEMBER REMOVAL/ INSTALLATION)
9	Transverse member (See R–27 TRANSVERSE MEMBER REMOVAL/ INSTALLATION)

REAR SUSPENSION LOCATION INDEX

A6E740001016W01

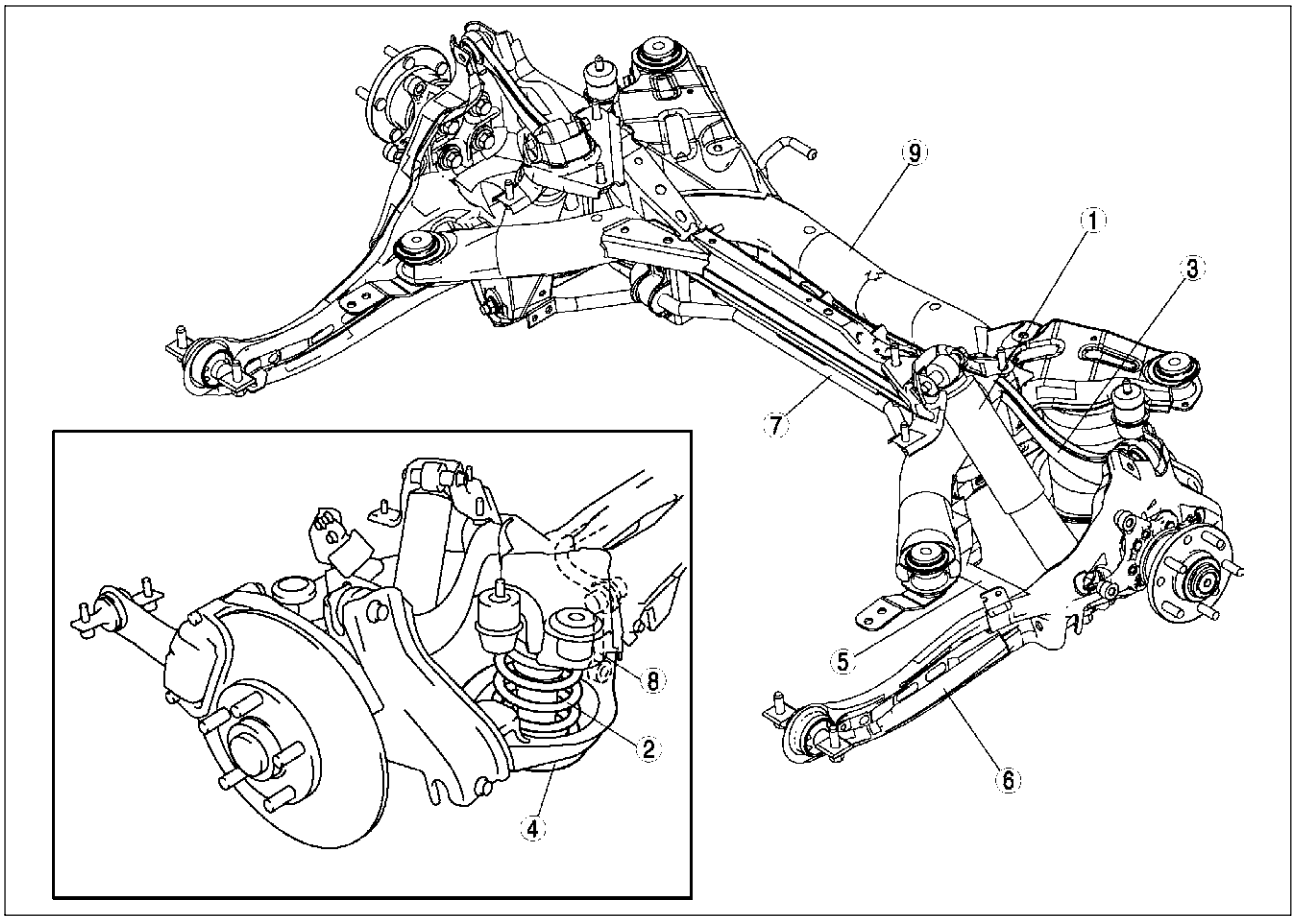

A6E7416W016

1	Rear shock absorber (SeeR–28 REAR SHOCK ABSORBER REMOVAL/ INSTALLATION) (See R–28 REAR SHOCK ABSORBER INSPECTION) (See R–28 REAR SHOCK ABSORBER DISPOSAL)
2	Rear coil spring (SeeR–29 REAR COIL SPRING REMOVAL/ INSTALLATION)
3	Rear upper arm (SeeR–31 REAR UPPER ARM REMOVAL/ INSTALLATION)
4	Rear lower arm (SeeR–30 REAR LOWER ARM REMOVAL/ INSTALLATION)

5	Rear lateral link (SeeR–33 REAR LATERAL LINK REMOVAL/ INSTALLATION)
6	Trailing link (SeeR–35 TRAILING LINK REMOVAL/ INSTALLATION)
7	Rear stabilizer (SeeR–34 REAR STABILIZER REMOVAL/ INSTALLATION)
8	Stabilizer control link (SeeR–35 STABILIZER CONTROL LINK INSPECTION)
9	Rear crossmember (SeeR–37 REAR CROSSMEMBER REMOVAL/ INSTALLATION)

GENERAL PROCEDURES

PRECAUTION (SUSPENSION)

A6E741001013W01

Wheels and Tires Removal/Installation

1. When a wheel is installed, tighten it to **88—118 N·m {9.0—12.0 kgf·m, 65.0—87.0 ft·lbf}**.

Suspension Links Removal/Installation

1. Tighten any part of the suspension that uses rubber bushings only after the vehicle has been lowered and unloaded.

Note
- Unloaded: Fuel tank is full. Engine coolant and engine oil are at specified levels. Spare tire, jack and tools are in designated position.

Brake Lines Disconnection/Connection

Caution
- **Brake fluid will damage painted surfaces. If brake fluid does get on a painted surface, wipe it off immediately.**

1. Tighten the brake pipe flare nut using the **SST** (49 0259 770B). Be sure to modify the brake pipe flare nut tightening torque to allow for use of a torque wrench-**SST** combination. (See GI–16 TORQUE FORMULAS.)
2. If any brake line has been disconnected anytime during the procedure, add brake fluid, bleed the brakes, and inspect for leakage after the procedure has been completed.

Power Steering Components Removal/Installation

1. If any power steering fluid line has been disconnected anytime during the procedure, add ATF M-III or equivalent (e.g. Dexron®II), bleed the fluid line, and inspect for leakage after the procedure has been completed.

WHEEL ALIGNMENT

WHEEL ALIGNMENT PRE-INSPECTION

A6E741201013W01

1. Inspect the tire inflation, and adjust to the recommended pressure as necessary.
2. Inspect the front wheel bearing play and correct it if necessary. (See M–4 Wheel Bearing Play Inspection.)
3. Inspect the wheel and tire runouts. (See TD–8 SUSPENSION.)
4. Inspect the ball joints and steering linkage for excessive looseness.
5. Shake the vehicle to inspect the operation of the shock absorbers.

Note
- The vehicle must be on level ground and unloaded.
- Unloaded: Fuel tank is full. Engine coolant and engine oil are at specified level. Spare tire, jack and tools are in designated position.

6. Measure the height from the center of the wheel to the fender brim. The difference between the left and right measurement must not exceed **10 mm {0.39 in}**.

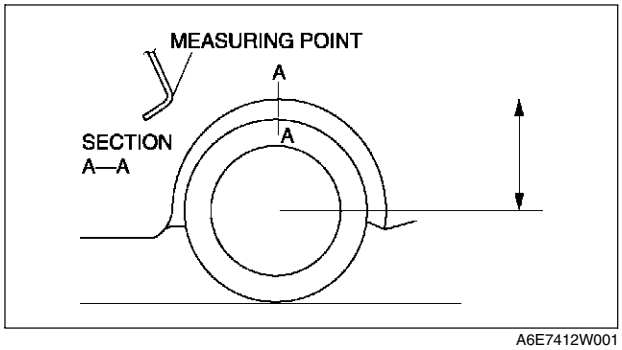

A6E7412W001

FRONT WHEEL ALIGNMENT

A6E741201015W01

Specification (Unloaded)*1

Normal

Item		Fuel gauge indication				
		Empty	1/4	1/2	3/4	Full
Total toe-in	(mm {in})	Tire: 2±4 {0.08±0.16}, Rim inner: 1±3 {0.04±0.12}				
	(degree)	0°11′±0°22′				
Maximum steering angle	Inner	39°±3°				
	Outer	31°±3°				
Caster angle*2 (reference value)		3°37'±1°	3°39'±1°	3°41'±1°	3°44'±1°	3°47'±1°
Camber angle*2(reference value)		-0°16'±1°			-0°17'±1°	
Steering axis inclination (reference value)		5°26'			5°28'	

Elevated*3

Item		Fuel gauge indication				
		Empty	1/4	1/2	3/4	Full
Total toe-in	(mm {in})	Tire: 2±4 {0.08±0.16}, Rim inner: 1±3 {0.04±0.12}				
	(degree)	0°11′±0°22′				
Maximum steering angle	Inner	39°±3°				
	Outer	31°±3°				
Caster angle*2 (reference value)		3°32'±1°	3°34'±1°	3°36'±1°	3°39'±1°	3°42'±1°
Camber angle*2(reference value)		-0°09'±1°			-0°10'±1°	
Steering axis inclination (reference value)		5°17'			5°18'	

*1 : Engine coolant and engine oil are at specified level. Spare tire, jack and tools are in designated position.
*2 : Difference between left and right must not exceed 1°30'.
*3 : Distance between wheel center and fender brim is 402 mm {15.8 in} (reference value).

R

Maximum Steering Angle Adjustment

1. Loosen the tie-rod end locknuts.
2. Remove the steering gear boot clamp.
3. Turn the tie rods to equalize the length L.

   Maximum left/right difference
   3 mm {0.12 in}

4. Turn the tie rods equally to provide the correct maximum steering angle.
5. Tighten the tie-rod end locknuts.

   Tightening torque
   68.6—98.0 N·m
   {7.00—9.99 kgf·m, 50.6—72.2 ft·lbf}

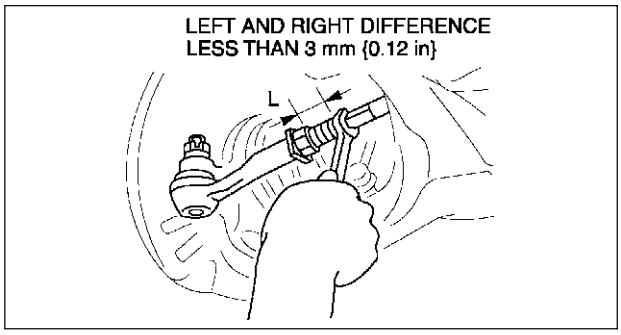

A6E7412W002

6. Verify that the boot is not twisted, and install the boot clamp.
7. Adjust the toe-in after adjusting the steering angle.

Total Toe-in Adjustment

1. Center the steering wheel and confirm that the vehicle wheels/tires are pointing straight.
2. Loosen the left and right tie-rod end locknuts and turn the tie-rods equally. Both tie rods are right threaded, so turning the right tie-rod toward the front of the vehicle and the left toward the rear increases toe-in.

   Note
   - Turning both tie-rods one complete turn changes toe-in by **about 6 mm {0.24 in} (0°36')**.

3. Tighten the tie-rod end locknuts to the specified torque.

   Tightening torque
   68.6—98.0 N·m {7.00—9.99 kgf·m, 50.6—72.2 ft·lbf}

4. Verify that the boot is not twisted, and install the boot clamp.

REAR WHEEL ALIGNMENT

A6E741201016W01

Specification (Unloaded)*1

Normal

Item		Fuel gauge indication				
		Empty	1/4	1/2	3/4	Full
Total toe-in	(mm {in})	Tire: 2±4 {0.08±0.16}, Rim inner: 1±3 {0.04±0.12}				
	(degree)	0°11′±0°22′				
Camber angle*2		–1°05′±1°	–1°07′±1°	–1°09′±1°	–1°11′±1°	–1°13′±1°
Thrust angle	(degree)	0°±0°48′				

Elevated*3

Item		Fuel gauge indication				
		Empty	1/4	1/2	3/4	Full
Total toe-in	(mm {in})	Tire: 2±4 {0.08±0.16}, Rim inner: 1±3 {0.04±0.12}				
	(degree)	0°11′±0°22′				
Camber angle*2		–0°56′±1°	–0°58′±1°	–1°00′±1°	–1°02′±1°	–1°05′±1°
Thrust angle	(degree)	0°±0°48′				

*1 : Engine coolant and engine oil are at specified level. Spare tire, jack and tools are in designated position.
*2 : Difference between left and right must not exceed 1°30'.
*3 : Distance between wheel center and fender brim is 392 mm {15.4 in} (reference value).

Note
- Adjust the toe-in after adjusting the camber.

Camber Adjustment

1. Loosen the cam nut on the lower arm.
2. Turn the adjusting cam bolt to provide the correct camber angles as indicated.

	Left wheel	Right wheel
Positive direction	Clockwise	Counter-clockwise
Negative direction	Counter-clockwise	Clockwise

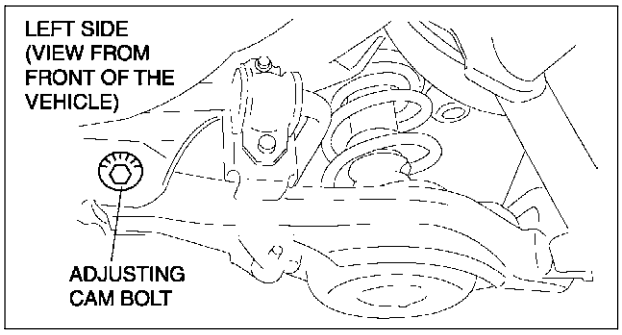

A6E7412W003

3. Tighten the cam nut.

Tightening torque
86.2—116.6 N·m
{8.79—11.88 kgf·m, 63.58—85.99 ft·lbf}

Total Toe-in Adjustment

1. Loosen the locknut of the lateral link.

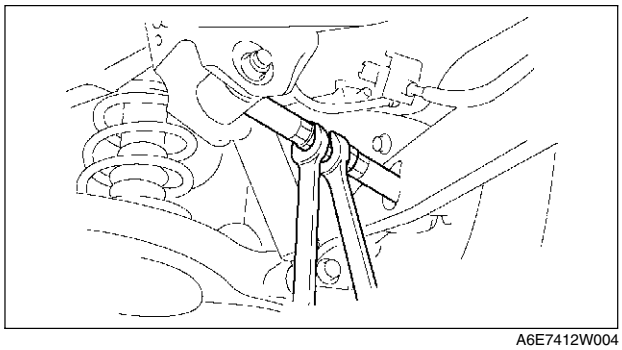

A6E7412W004

2. Adjust the toe-in turning the adjusting link.

Specification
Total Toe-in: 2±4 mm {0.08±0.16 in}

Note
- Toe change amount: 0°43′ / one rotation

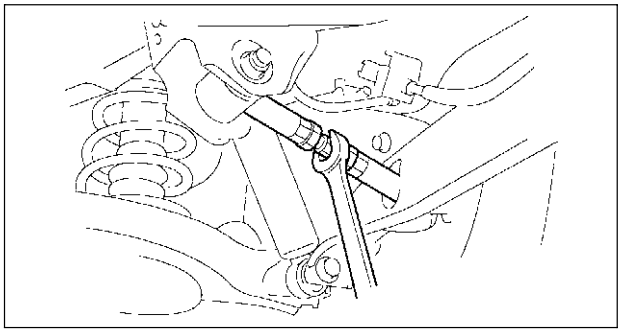

A6E7412W005

3. Tighten the locknut.

Tightening torque
68.6—98.1 N·m
{7.0—10.0 kgf·m, 50.6—72.3 ft·lbf}

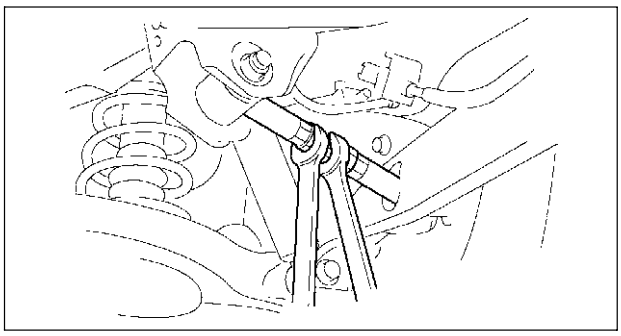

A6E7412W004

R

WHEEL AND TIRE

WHEEL BALANCE ADJUSTMENT (16 INCH AND 17 INCH ALUMINUM ALLOY WHEEL)

A6E741701014W01

Caution
- **Adjust the outer wheel balance first, then the inner wheel balance.**
- **Be careful not to scratch the wheels.**

Adhesive-type Balance Weight (Outer)

1. Remove the old balance weight from the wheel.
2. Remove the double-sided adhesive tape remaining on the wheel, then clean and degrease the bonding area.
3. Set the wheel on a wheel balancer, measure the amount of unbalance and the position with the mode set for knock-type balance weight.
4. Multiply the amount of unbalance by **1.6** to get the balance weight value.
5. Select a balance weight closest to the weight value and attach the balance weight on the position (outer) indicated by the wheel balancer.

Example calculation of balance weight value
Indicated amount of unbalance: 23 g {0.81 oz}
23 g {0.81 oz}×1.6 = 36.8 g {1.30 oz}
Selected balance weight value: 35 g {1.24 oz}

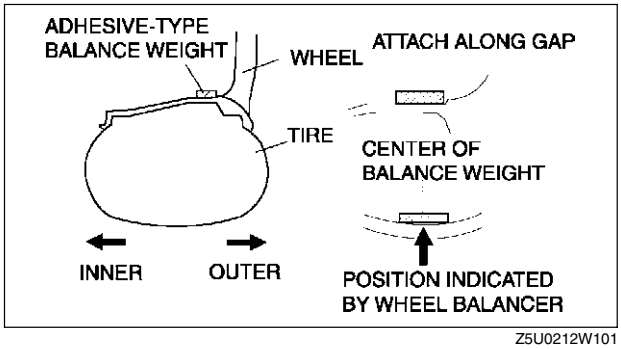

Z5U0212W101

Note
- When selecting a balance weight, select one closest to the calculated value.
  Example: **32.4 g {1.14 oz}= 30 g {1.06 oz}, 32.5 g {1.15 oz}= 35 g {1.24 oz}**

Caution
- **Use a genuine balance weight or equivalent (steel).**
- **When attaching the weight balance, press the balance weight with a force of 25 N {2.5 kgf, 5.5 lbf} per 5 g for 2 seconds or more.**

6. If attaching 2 balance weights, position them so that each is on either side of the position indicated by the wheel balancer.

Caution
- **Do not attach weight balances in a row.**
- **Do not overlap the balance weights.**
- **Total weight must not exceed 160g {5.65 oz}.**

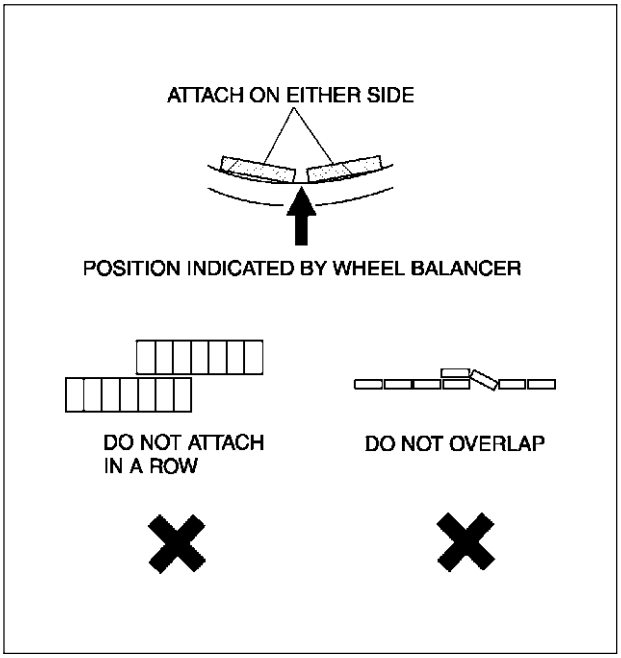

Z5U0212W102

Knock-type Balance Weight (Inner)

1. Measure the amount of unbalance with a wheel balancer.
2. Attach a balance weight corresponding to the measured weight value on the position (inner) indicated by the wheel balancer.

Caution
- **Do not attach 3 or more balance weights.**
- **One balance weight must not exceed 60g {2.12 oz}, and a total of 2 balance weights must not exceed 100g {3.53 oz}.**

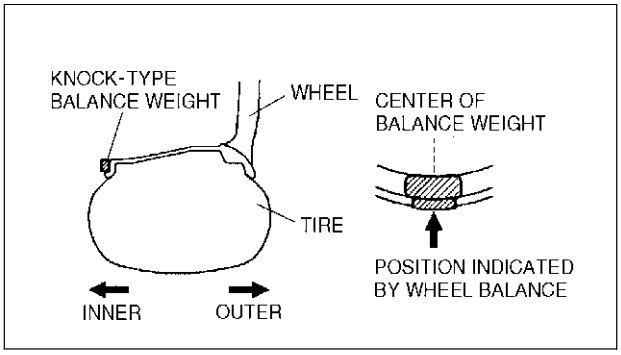

Z5U0212W103

Remaining Amount of Unbalance Confirmation

1. After installing the outer and inner balance weights, operate the wheel balancer again.
2. Confirm that the remaining unbalance does not exceed followings on either side.

	Outer	Inner
16 inch wheel	10 g {0.35 oz}	8 g {0.28 oz}
17 inch wheel	9 g {0.32 oz}	7 g {0.25 oz}

- If the remaining unbalance exceeds **10 g {0.35 oz}** (16 inch wheel) or **9g {0.32 oz}** (17 inch wheel), perform wheel balance adjustment again.

Allowable remaining unbalance value (g)

	Dynamic unbalance (at rim)		Static unbalance (at rim)
	Outer	Inner	
16 inch wheel	10 g {0.35 oz} max.	8 g {0.28 oz} max.	13 g {0.46 oz} max.
17 inch wheel	9 g {0.32 oz} max.	7 g {0.25 oz} max.	11 g {0.39 oz} max.

FRONT SUSPENSION

FRONT SHOCK ABSORBER AND SPRING REMOVAL/INSTALLATION

A6E741404910W01

Caution

- **Performing the following procedures without first removing the ABS wheel-speed sensor may possibly cause an open circuit in the harness if it is pulled by mistake. Before performing the following procedures, remove the ABS wheel-sensor (axle side) and fix it to an appropriate place where the sensor will not be pulled by mistake while servicing the vehicle.**

1. Remove in the order indicated in the table.
2. Install in the reverse order of removal.

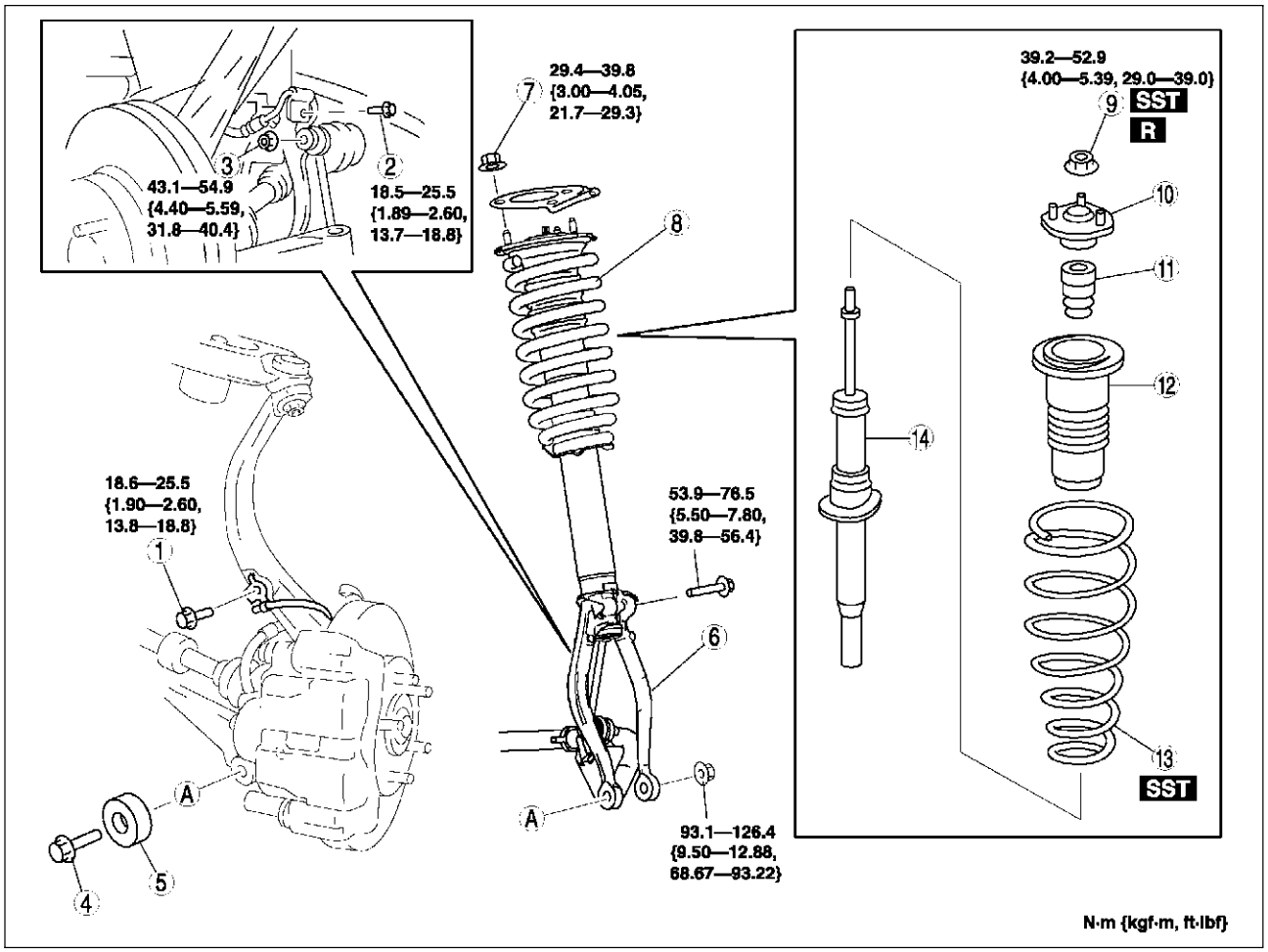

A6E7414W017

1	Bolt (ABS wheel-speed sensor)
2	Bolt (brake hose bracket)
3	Nut (front stabilizer control link)
4	Bolt (front shock absorber lower side) (See R–10 Bolt (Front Shock Absorber Lower Side) Removal Note)
5	Dynamic damper
6	Damper fork (See R–12 Damper Fork Installation Note)
7	Nut (front shock absorber upper side)

8	Front shock absorber and coil spring (See R–11 Front Shock Absorber and Coil Spring Installation Note)
9	Piston rod nut (See R–10 Piston Rod Nut Removal Note)
10	Mounting rubber
11	Bound stopper
12	Dust boot
13	Coil spring (See R–10 Coil Spring Installation Note)
14	Front shock absorber

Bolt (Front Shock Absorber Lower Side) Removal Note

1. Support the knuckle with a jack to prevent from falling.

Piston Rod Nut Removal Note

Warning

- **Removing the piston rod nut is dangerous. The shock absorber and spring could fly off under tremendous pressure and cause serious injury or death. Secure the shock absorber in the SSTs before removing the piston rod nut.**

1. Protect the coil spring using a piece of cloth, then set the **SSTs**.
2. Compress the coil spring using the **SSTs**, and remove the piston rod nut.

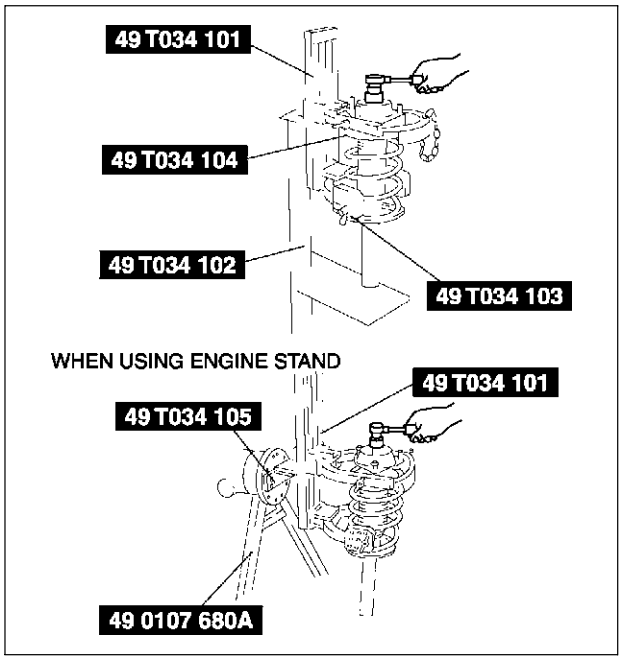

A6E7414W008

Coil Spring Installation Note

1. Temporarily install the coil spring, dust boot and mounting rubber on the shock absorber so that the lower end of the coil spring is seated on the step of the lower spring seat.
2. Mark the coil spring, dust boot and mounting rubber for proper installation as shown in the figure.
3. Align the marks of the coil spring and dust boot. Protect the coil spring and dust boot using a piece of cloth, then set the **SSTs**.

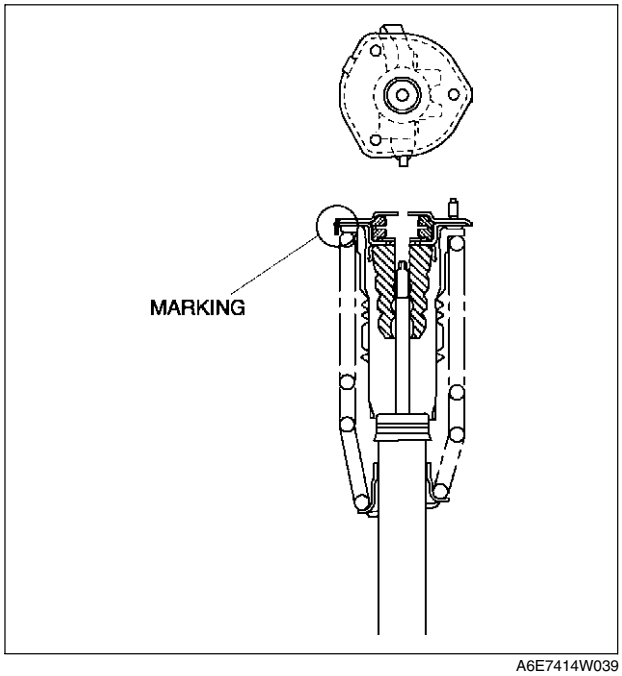

A6E7414W039

4. Compress the coil spring using the **SSTs**.
5. Install the shock absorber so that the lower end of the coil spring is seated on the step of the lower spring seat.
6. Make sure that the marks on the shock absorber and dust boot are aligned.
7. Install the mounting rubber and piston rod nut, then remove the **SSTs**.

Piston rod nut tightening torque
39.2—52.9 N·m
{4.00—5.39 kgf·m, 29.0—39.0 ft·lbf}

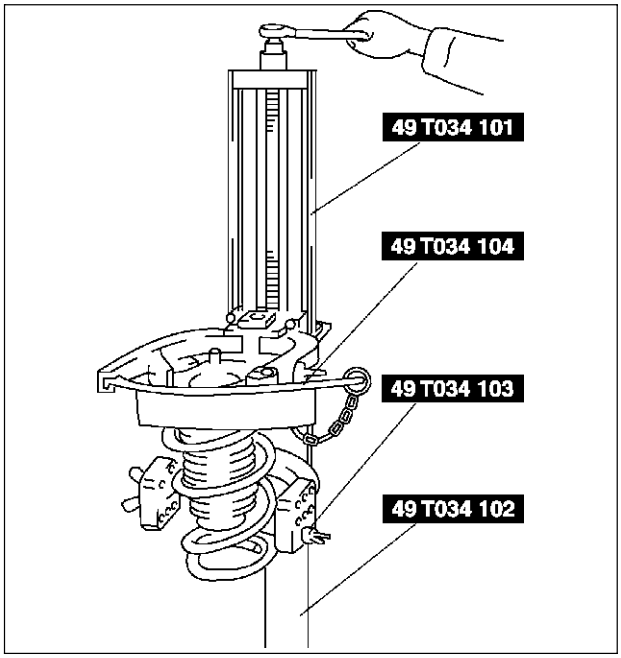

A6E7414W029

Front Shock Absorber and Coil Spring Installation Note

1. Install the stud bolts at a 27°—33° angle from where the stabilizer control link is installed (center line), towards the inner side of the vehicle.

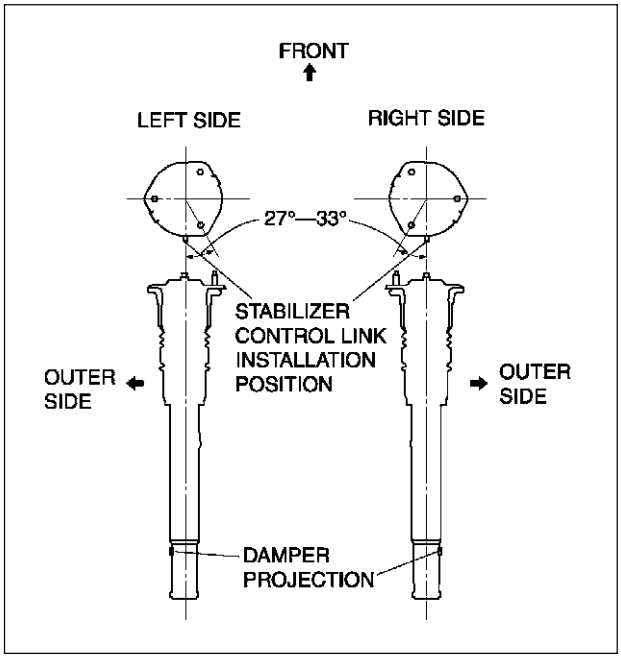

A6E7414W004

R

Damper Fork Installation Note

1. Align the gap of the damper fork with the projections of the damper.
2. Tighten the bolt.

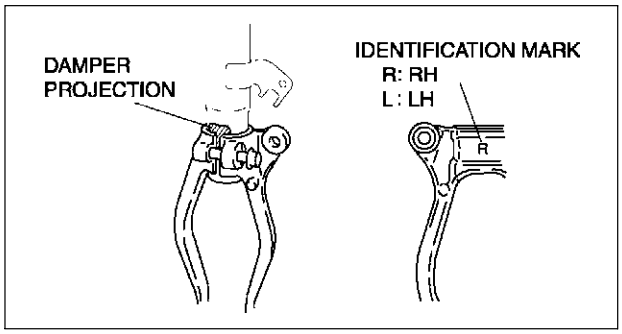

A6E7414W005

FRONT SHOCK ABSORBER INSPECTION

A6E741434700W01

1. Remove the front shock absorber from the vehicle.
2. Inspect for damage and oil leakage.
3. Inspect the rubber bushing for deterioration and wear.
4. Compress and extend the shock piston at least three times. Verify that the operational force does not change and that there is no unusual noise.
   - If not as specified, replace the shock absorber.
   (1) Compress the shock absorber piston and release it.
   (2) Verify that the piston extends fully at a normal speed.

FRONT SHOCK ABSORBER DISPOSAL

A6E741434700W02

Warning

- **Whenever drilling into a shock absorber, wear protective eye wear. The gas in the shock absorber is pressurized, and could spray metal chips into the eyes and face when drilling.**

1. Clamp a shock absorber on a flat surface or with the piston pointing downwards.
2. Drill a **2—3 mm {0.08—0.12 in}** hole at a point **20—30 mm {0.8—1.2 in}** from the bottom of the tube, so that the gas can escape.
3. Turn the hole downwards.
4. The oil can be collected by moving the piston rod several times up and down and cutting the tube at the end.
5. Dispose of waste oil according to the waste disposal law.

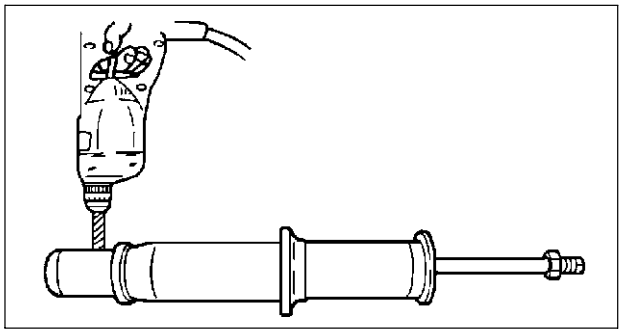

A6E7414W022

Note

- Shock absorber gas is nitrogen gas.
- Shock absorber oil is mineral oil.

FRONT UPPER ARM REMOVAL/INSTALLATION

A6E741434200W01

Caution

- **Performing the following procedures without first removing the ABS wheel-speed sensor may possibly cause an open circuit in the harness if it is pulled by mistake. Before performing the following procedures, remove the ABS wheel-sensor (axle side) and fix it to an appropriate place where the sensor will not be pulled by mistake while servicing the vehicle.**

1. Remove in the order indicated in the table.
2. Install in the reverse order of removal.
3. Inspect the front wheel alignment.
   (See R–5 FRONT WHEEL ALIGNMENT.)

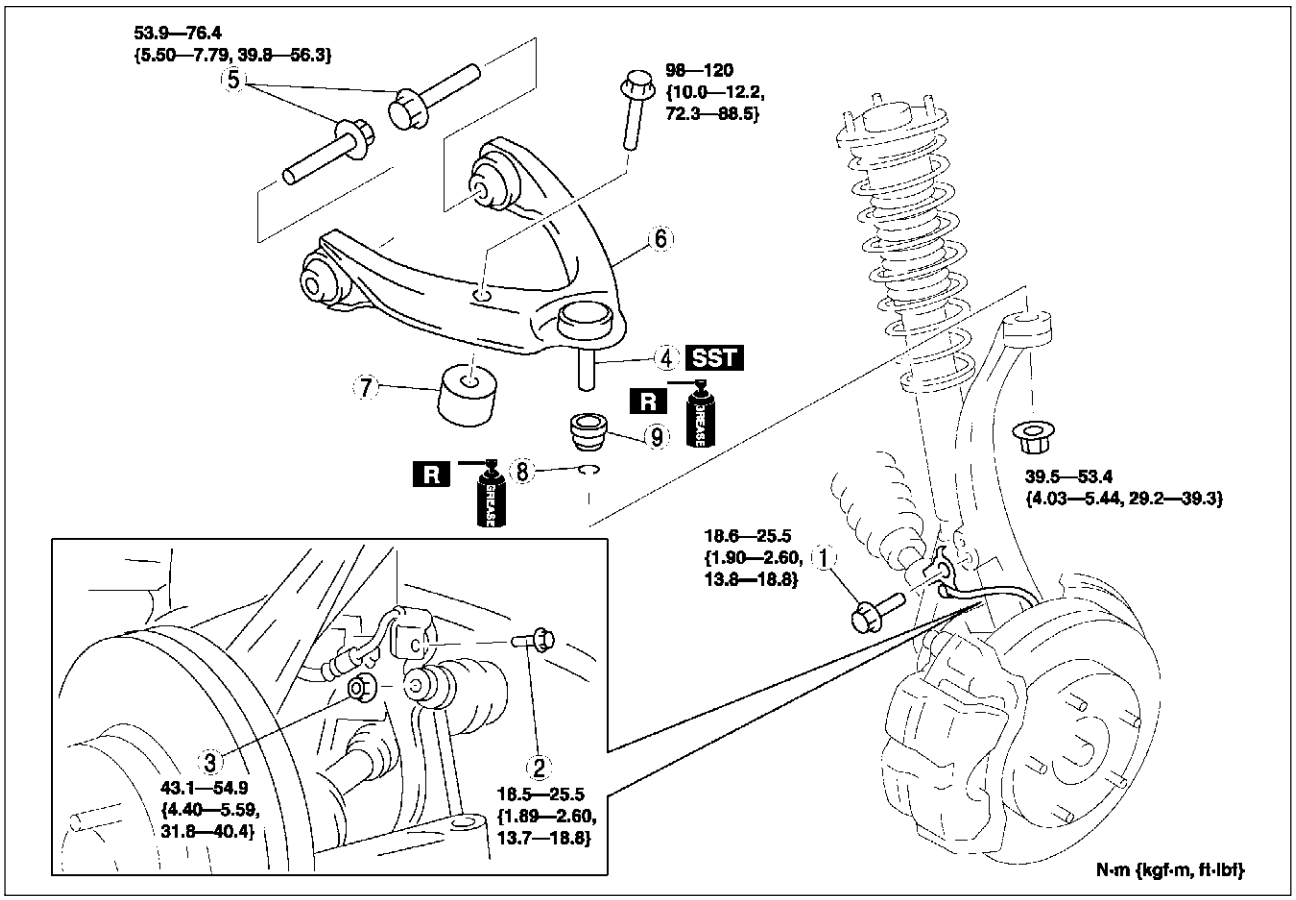

A6E7414W035

1	Bolt (ABS wheel-speed sensor)
2	Bolt (brake hose bracket)
3	Nut (stabilizer control link)
4	Front upper arm ball joint (SeeR–13 Front Upper Arm Ball Joint Removal Note)

5	Bolt (front upper arm) (See R–14 Bolt (Front Upper Arm) Removal Note)
6	Front upper arm
7	Dynamic Damper
8	Clip (See R–14 Clip Installation Note)
9	Dust boot

Front Upper Arm Ball Joint Removal Note

1. Support the knuckle using the jack.

2. Separate the ball joint from the knuckle using the **SST**.

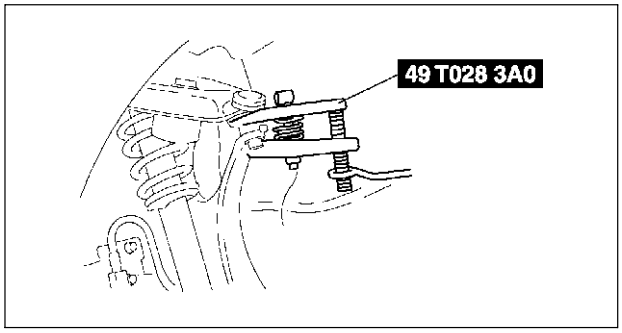

A6E7414W006

Bolt (Front Upper Arm) Removal Note

1. Remove the nuts (3 locations) from the upper part of the front shock absorber.
2. Pull the front shock absorber and coil spring out of the way, towards the outer side of the vehicle.
3. Remove the bolts.

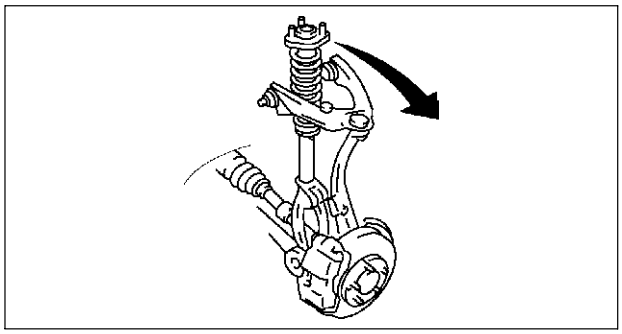

A6E7414W023

Clip Installation Note

1. Wipe the grease off the ball stud.
2. Fill the inside of the new dust boot with grease.
3. Install the boot on the ball joint.
4. Install the new clip using the **SST**.
5. Verify that the clip is installed securely to the groove.
6. Wipe away the excess grease.

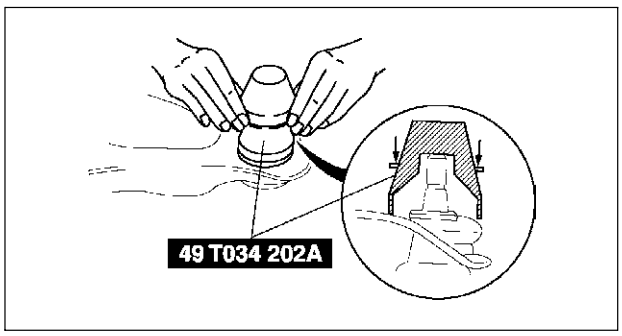

A6E7414W024

FRONT UPPER ARM INSPECTION

A6E741434200W02

1. Remove the upper arm from the vehicle.
2. Inspect for damage, cracks, and bending.
3. Inspect the ball joint rotation torque.
   (1) Rotate the ball joint five times.
   (2) Measure the rotation torque using a suitable allen socket and a torque wrench.
      - If not within the specification, replace the lower arm component.

Rotation torque
1.5 N·m {15.0 kgf·cm, 13.2 in·lbf} max.

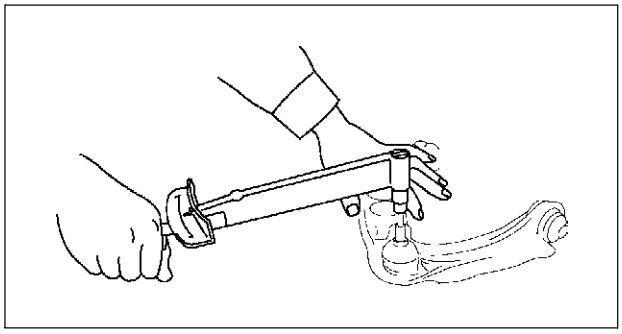

A6E7414W043

FRONT LOWER ARM (FRONT) REMOVAL/INSTALLATION

A6E741434300W01

1. Remove in the order indicated in the table.
2. Install in the reverse order of removal.

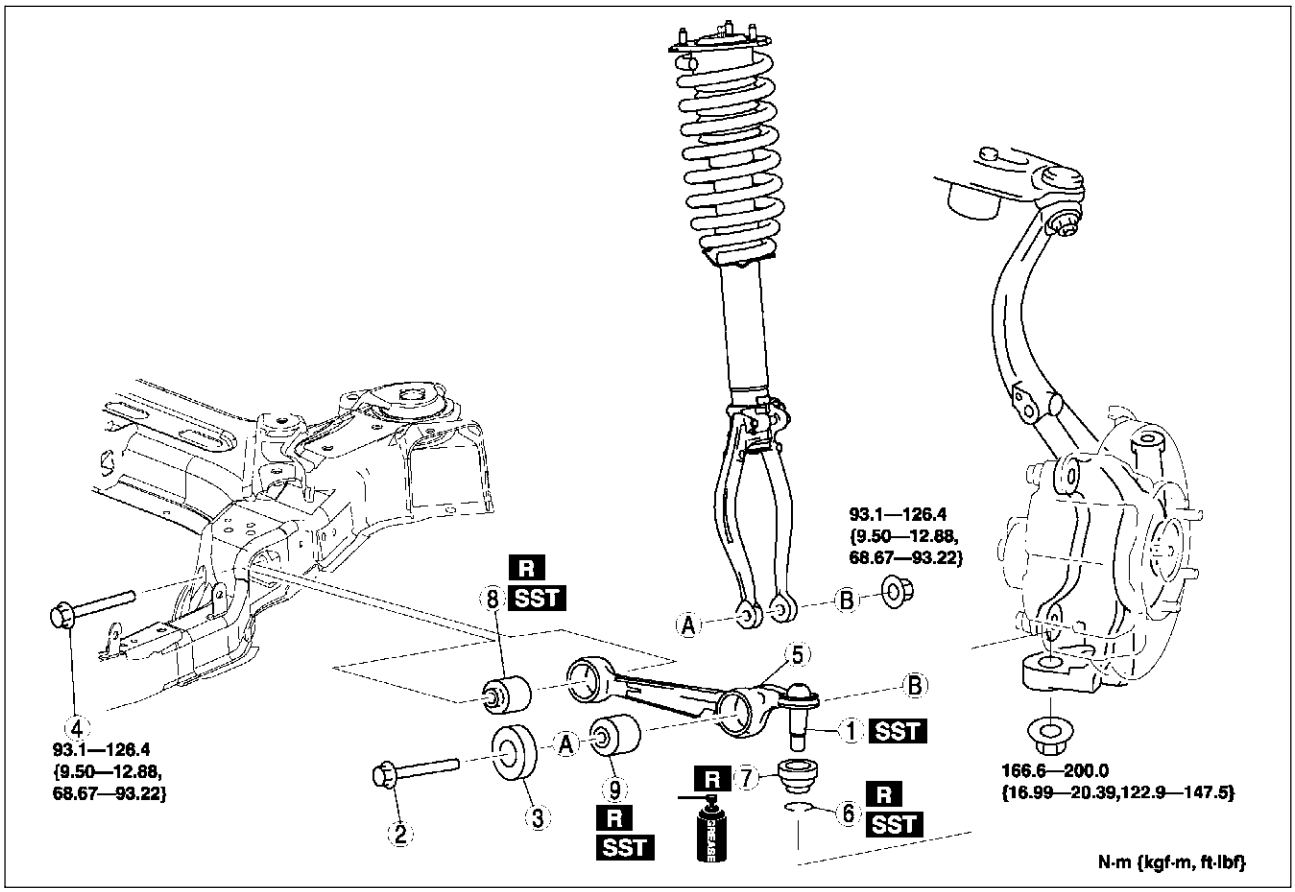

A6E7414W018

1	Front lower arm (front) ball joint (See R–16 Front Lower Arm (Front) Ball Joint Removal Note)
2	Bolt (front shock absorber lower side)
3	Dynamic damper
4	Bolt (front lower arm inner side)
5	Front lower arm (front) component
6	Clip (See R–18 Clip Installation Note)
7	Dust boot

8	Front lower arm (front) bushing (inner side) (See R–16 Front Lower Arm (Front) Bushing (Inner Side) Removal Note) (See R–17 Front Lower Arm (Front) Bushing (Inner Side) Installation Note)
9	Front lower arm (front) bushing (outer side) (See R–16 Front Lower Arm (Front) Bushing (Outer Side) Removal Note) (See R–16 Front Lower Arm (Front) Bushing (Outer Side) Installation Note)

Front Lower Arm (Front) Ball Joint Removal Note

1. Separate the ball joint from the knuckle using the **SSTs**.

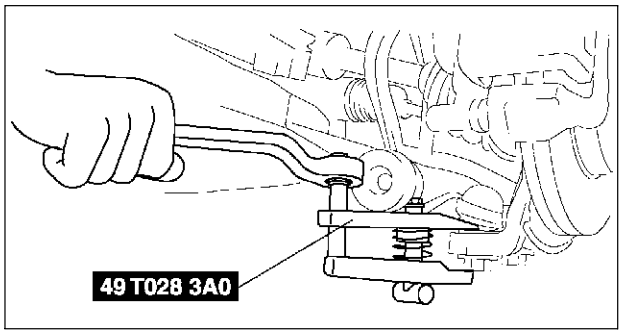

A6E7414W030

Front Lower Arm (Front) Bushing (Inner Side) Removal Note

1. Press the bushing (inner side) out using the **SSTs**.

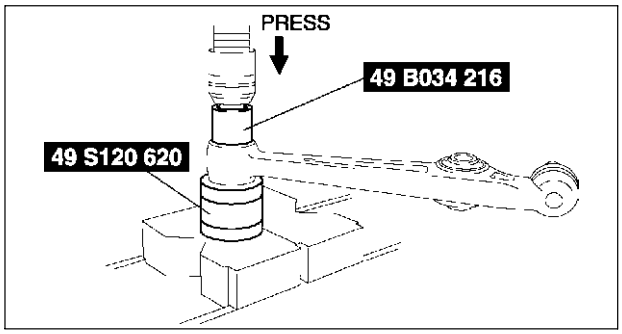

A6E7414W001

Front Lower Arm (Front) Bushing (Outer Side) Removal Note

1. Press the bushing (outer side) out using the **SSTs**.

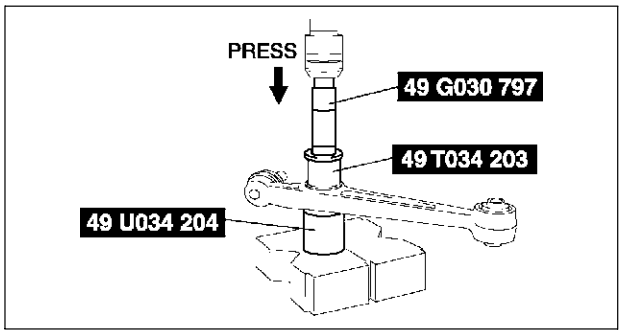

A6E7414W010

Front Lower Arm (Front) Bushing (Outer Side) Installation Note

1. Mark the new bushing as shown in the figure.

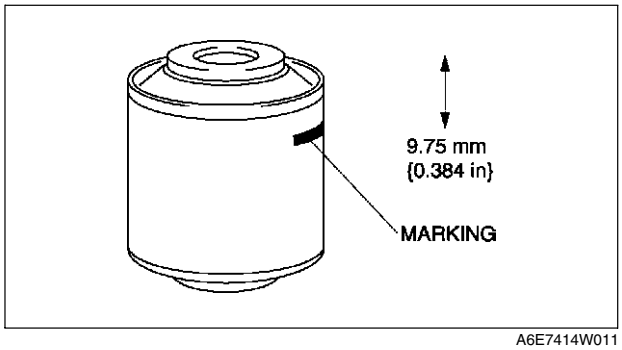

A6E7414W011

2. Press the bushing in to the marking using the **SSTs**.

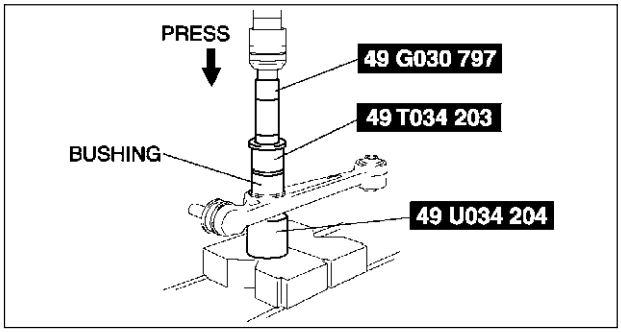

A6E7414W012

3. Verify that clearance distance A—B is **8.75 mm—10.75 mm {0.3445 in—0.4232 in}**.

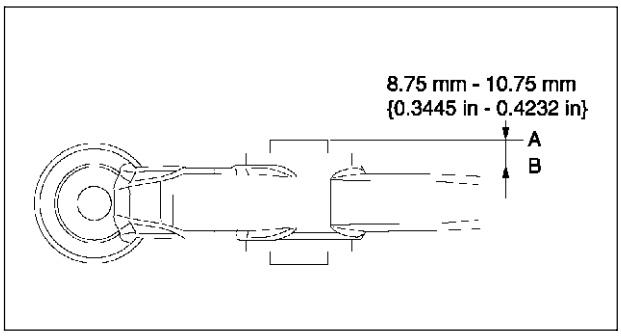

A6E7414W003

Front Lower Arm (Front) Bushing (Inner Side) Installation Note

1. Mark the new bushing as shown in the figure.

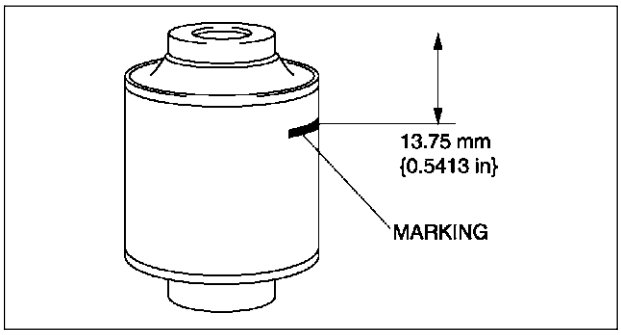

A6E7414W013

2. Press the bushing in to the marking using the **SSTs**.

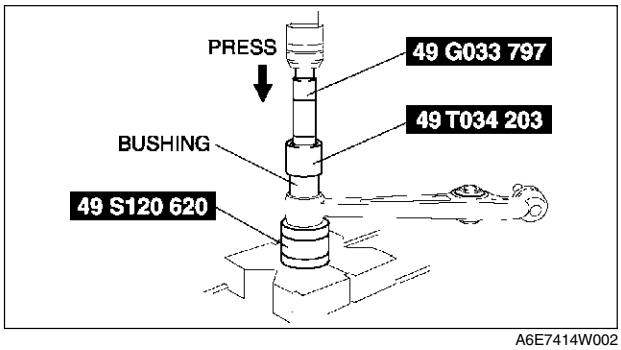

A6E7414W002

R

3. Verify that clearance distance A—B is **12.75 mm—14.75 mm {0.5020 in—0.5807 in}**.

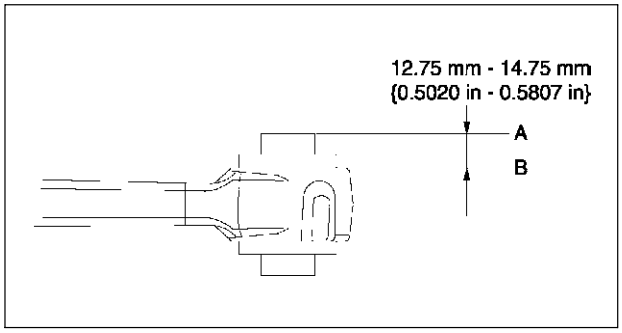

A6E7414W007

Clip Installation Note

1. Wipe the grease off the ball stud.
2. Fill the inside of the new dust boot with grease.
3. Install the boot on the ball joint.
4. Install the new clip using the **SST**.
5. Verify that the clip is installed securely to the groove.
6. Wipe away the excess grease.

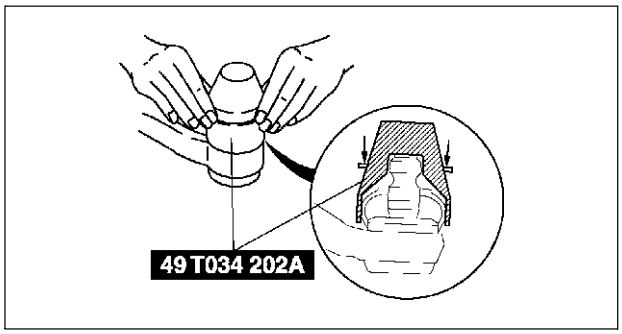

A6E7414W025

FRONT LOWER ARM (FRONT) INSPECTION

A6E741434300W03

1. Remove the lower arm (front) from the vehicle.
2. Inspect for damage, cracks, and bending.
3. Inspect the ball joint rotation torque.
   (1) Rotate the ball joint five times.
   (2) Measure the rotation torque using a suitable allen socket and a torque wrench.
      - If not within the specification, replace the lower arm component.

Rotation torque
1.18—2.23 N·m
{12.1—22.7 kgf·cm, 10.5—19.7 in·lbf}

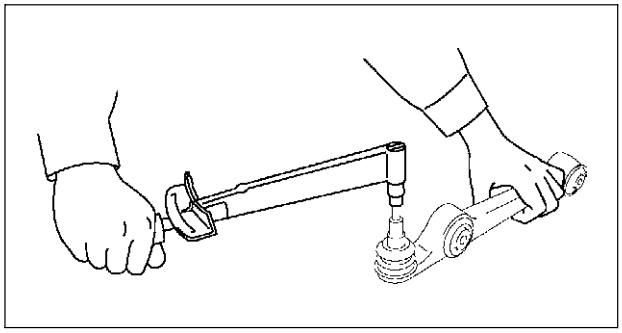

A6E7414W044

FRONT LOWER ARM (REAR) REMOVAL/INSTALLATION

A6E741434300W02

1. Remove the front crossmember component.
   (See R–23 FRONT CROSSMEMBER REMOVAL/INSTALLATION.)
2. Remove in the order indicated in the table.
3. Install in the reverse order of removal.
4. Inspect the front wheel alignment.
   (See R–5 FRONT WHEEL ALIGNMENT.)

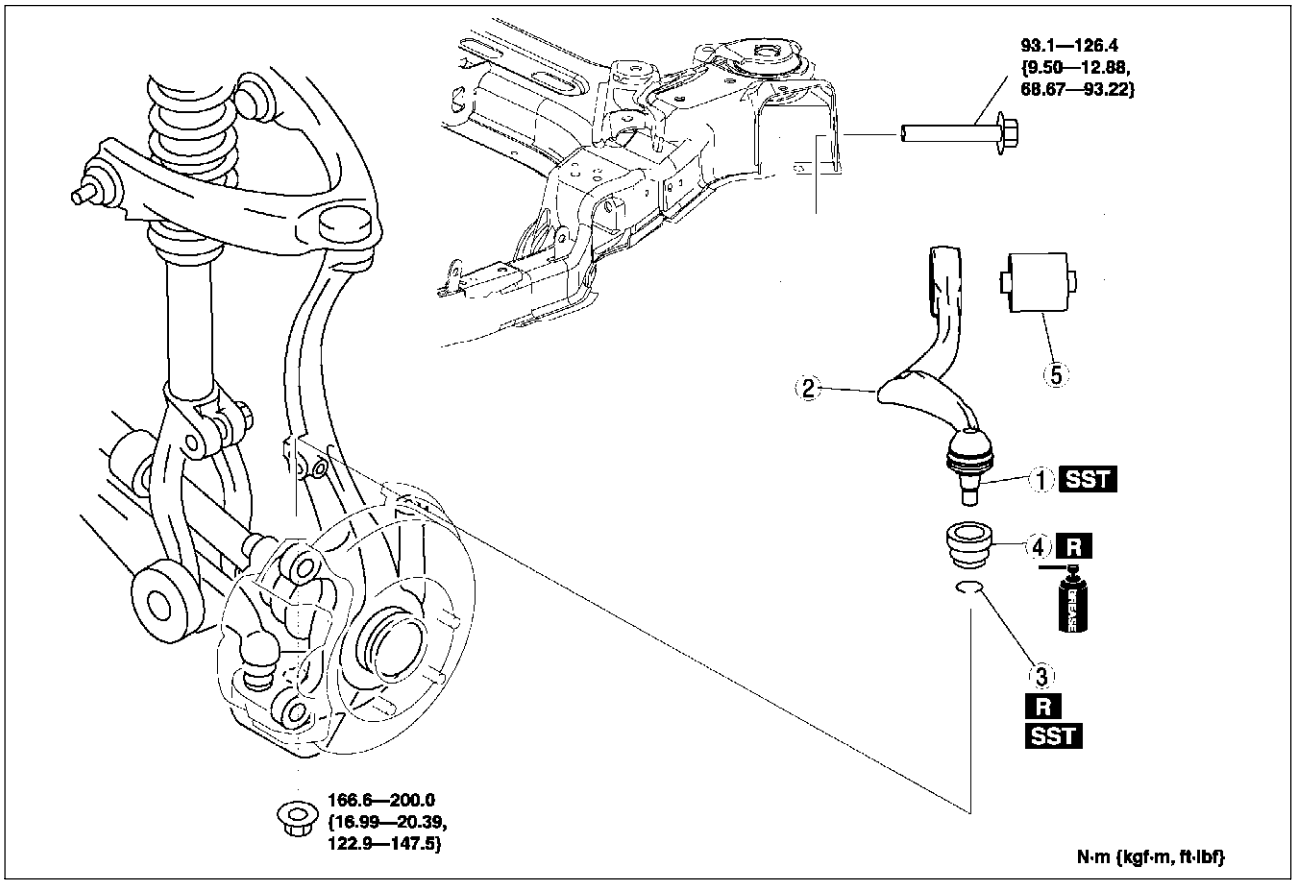

A6E7414W019

1	Front lower arm (rear) ball joint (See R–19 Front Lower Arm (Rear) Ball Joint Removal Note)
2	Front lower arm (rear) (See R–21 Front Lower Arm (Rear) Installation Note)
3	Clip R–21 Clip Installation Note

4	Dust boot
5	Front lower arm (rear) bushing (See R–20 Front Lower Arm (Rear) Bushing Removal Note) (See R–20 Front Lower Arm (Rear) Bushing Installation Note)

Front Lower Arm (Rear) Ball Joint Removal Note

1. Separate the ball joint from the knuckle using the **SSTs**.

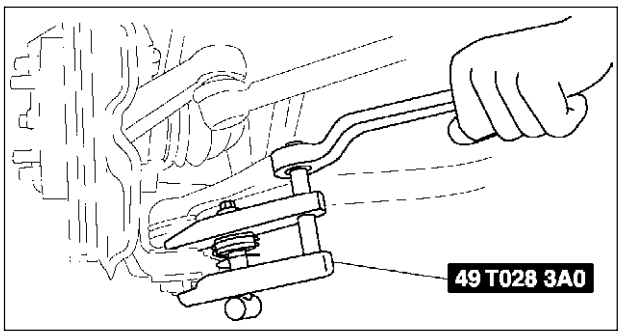

A6E7414W031

Front Lower Arm (Rear) Bushing Removal Note

1. Press the bushing out using the **SSTs**.
2. Remove the front lower arm (rear) from the press and tap the bushing out with a hammer.

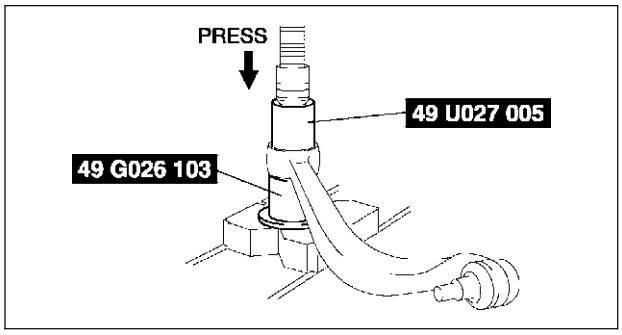

A6E7414W014

Front Lower Arm (Rear) Bushing Installation Note

1. Mark the new bushing as shown in the figure.

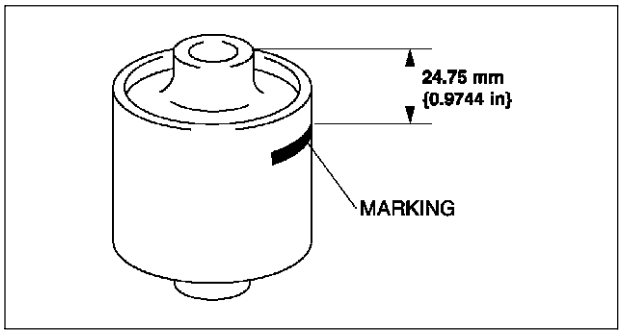

A6E7414W026

2. Press the bushing in to the marking using the **SSTs**.

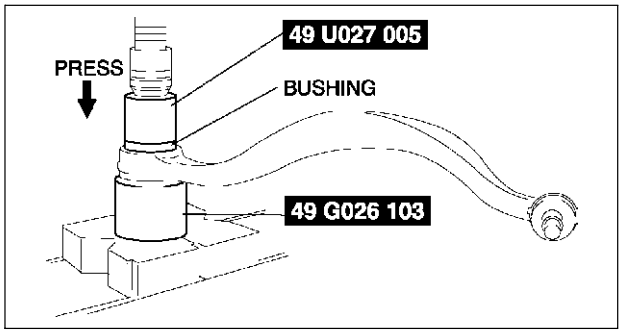

A6E7414W027

3. Verify that clearance distance A—B is **23.75 mm—25.75 mm {0.936 in—1.013 in}**.

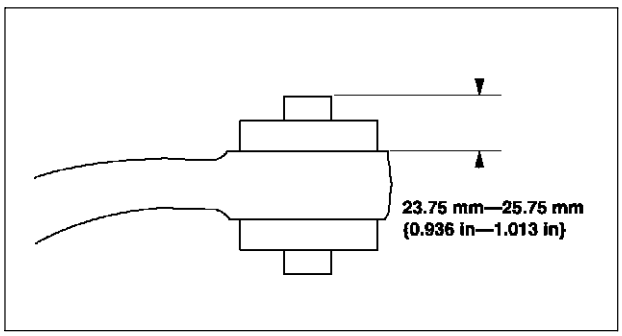

A6E7414W028

Clip Installation Note

1. Wipe the grease off the ball stud.
2. Fill the inside of the new dust boot with grease.
3. Install the boot on the ball joint.
4. Install the new clip using the **SST**.
5. Verify that the clip is installed securely to the groove.
6. Wipe away the excess grease.

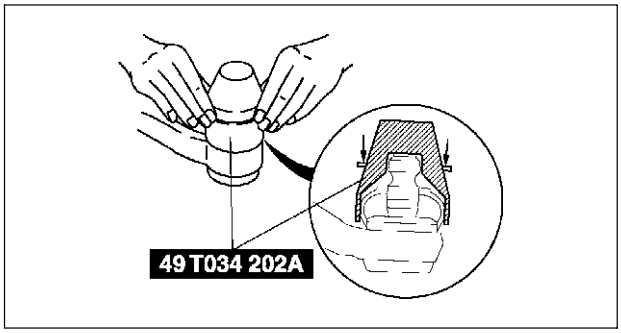

A6E7414W025

Front Lower Arm (Rear) Installation Note

1. Install the lower arm (rear) so that identification mark (L or R) faces toward the front of the vehicle.

FRONT LOWER ARM (REAR) INSPECTION

A6E741434300W04

1. Remove the lower arm (rear) from the vehicle.
2. Inspect for damage, cracks, and bending.
3. Inspect the ball joint rotation torque.
   (1) Rotate the ball joint five times.
   (2) Measure the rotation torque using a suitable allen socket and a torque wrench.
   - If not within the specification, replace the lower arm component.

Rotation torque
1.00—2.22 N·m
{10.2—22.6 kgf·cm, 8.86—19.6 in·lbf}

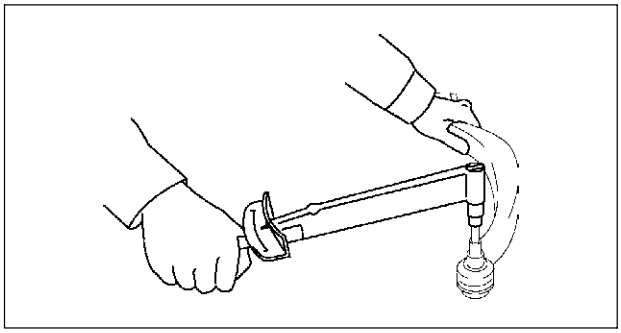

A6E7414W045

R

FRONT STABILIZER REMOVAL/INSTALLATION

1. Remove the front crossmember component. (See R–23 FRONT CROSSMEMBER REMOVAL/INSTALLATION.)
2. Remove in the order indicated in the table.
3. Install in the reverse order of removal.
4. Adjust the headlight zeroset. (See T–31 HEADLIGHT ZEROSET.)
5. Inspect the front wheel alignment. (See R–5 FRONT WHEEL ALIGNMENT.)

1	Stabilizer control link
2	Stabilizer bracket (See R–22 Stabilizer Bracket Installation Note)
3	Stabilizer bushing
4	Front stabilizer

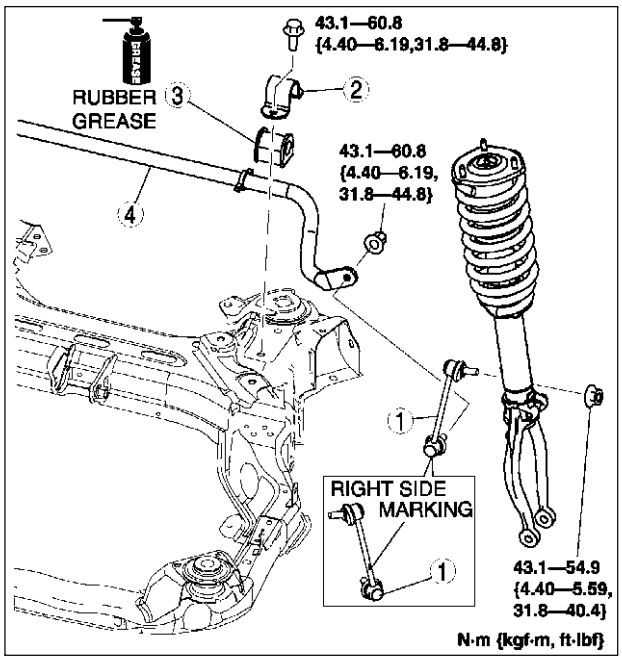

A6E7414W020

Stabilizer Bracket Installation Note

1. Apply rubber grease to the inside surface of the stabilizer bushing.
2. Align the bushing with the inside of positioning plate on the stabilizer bar.
3. Install the stabilizer bracket.

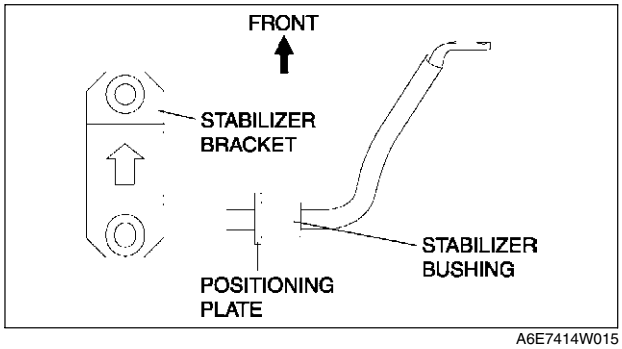

A6E7414W015

STABILIZER CONTROL LINK INSPECTION

A6E741434150W01

1. Remove the stabilizer control link from the vehicle.
2. Inspect for bending and damage.
3. Measure the ball joint starting torque.
   (1) Rock the ball joint stud side to side 10 times.
   (2) Rotate the ball joint stud 10 times.
   (3) Measure the starting torque using a suitable allen socket and a torque wrench.

Starting torque
0.23—0.47 N·m
{2.4—4.7 kgf·cm, 2.1—4.1 in·lbf}

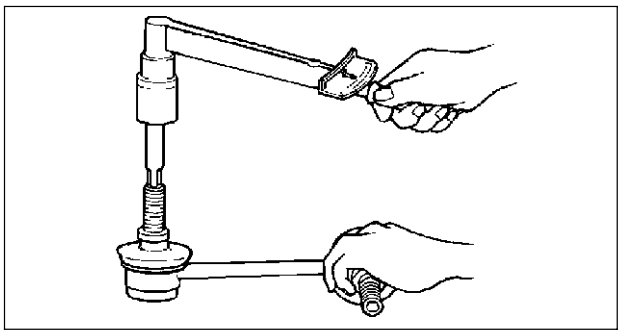

A6E7414W021

FRONT CROSSMEMBER REMOVAL/INSTALLATION

A6E741434800W01

1. Remove the under cover.
2. Remove the splash shield.
3. Remove the front auto leveling sensor.
   (See T–32 FRONT AUTO LEVELING SENSOR REMOVAL/INSTALLATION.)
4. Remove the transverse member.
   (See R–27 TRANSVERSE MEMBER REMOVAL/INSTALLATION.)
5. Remove the steering gear and linkage, and pipe assembly installation bolts from the front crossmember, then suspend the steering gear and linkage with a cable.

   Tightening torque
   - **Steering gear and linkage: 74.4—104.8 N·m {7.857—10.68 kgf·m, 54.88—77.29 ft·lbf}**
   - **Pipe assembly: 7.8—10.8 N·m {79.6—110.0 kgf·cm, 69.1—95.5 in·lbf}**

6. Remove in the order indicated in the table.
7. Install in the reverse order of removal.
8. Adjust the headlight zeroset.
   (See T–31 HEADLIGHT ZEROSET.)
9. Inspect the front wheel alignment.
   (See R–5 FRONT WHEEL ALIGNMENT.)

R

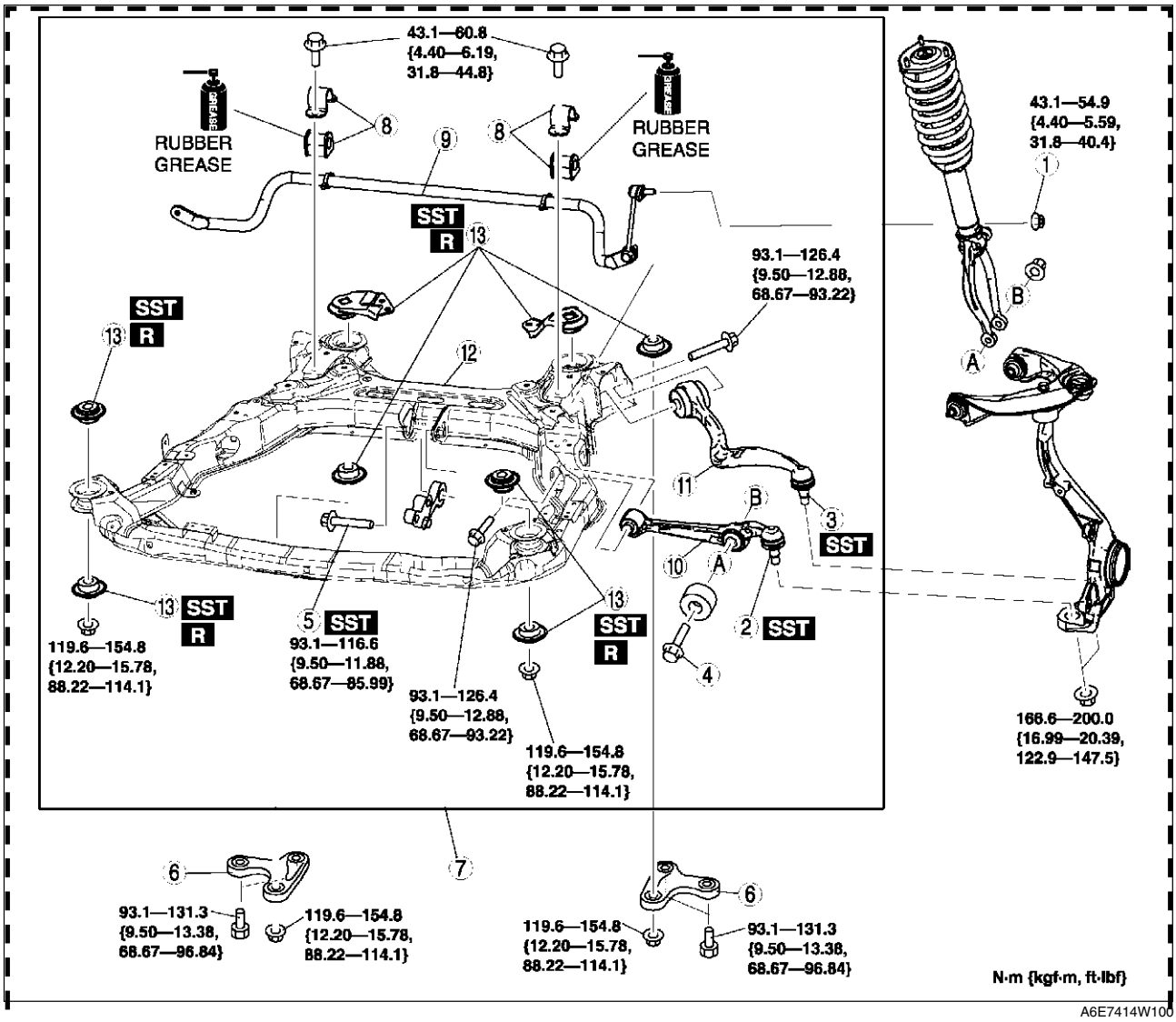

A6E7414W100

1	Nut (stabilizer control link)
2	Front lower arm (front) ball joint (See R–16 Front Lower Arm (Front) Ball Joint Removal Note)
3	Front lower arm (rear) ball joint (See R–19 Front Lower Arm (Rear) Ball Joint Removal Note)
4	Bolt (front shock absorber lower side)
5	No.1 engine mount center bolt (See R–25 No.1 Engine Mount Center Bolt Removal Note)
6	Crossmember bracket (See R–25 Crossmember Bracket Removal Note)

7	Crossmember component
8	Stabilizer bracket and bushing
9	Front Stabilizer
10	Front lower arm (front)
11	Front lower arm (rear)
12	Front crossmember
13	Front crossmember bushing (See R–25 Front Crossmember Bushing Removal Note) (See R–26 Front Crossmember Bushing Installation Note)

No.1 Engine Mount Center Bolt Removal Note

1. Suspend the engine using the **SST**.
2. Remove the No.1 engine mount center bolt.

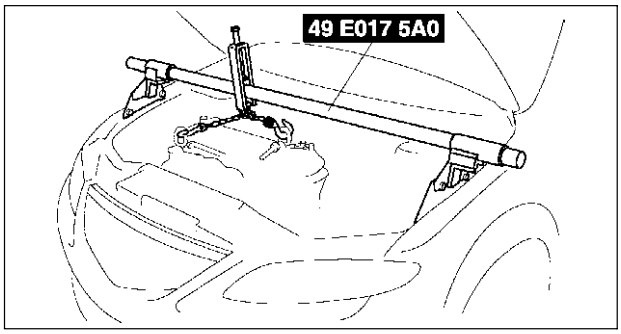

A6E7414W016

Crossmember Bracket Removal Note

Warning

- **Removing the crossmember is dangerous. The crossmember component could fall and cause serious injury or death. Verify that the jack securely supports the crossmember component before removing the crossmember bracket.**

1. Support the crossmember component with a jack and remove the nuts.
2. Remove the crossmember bracket.

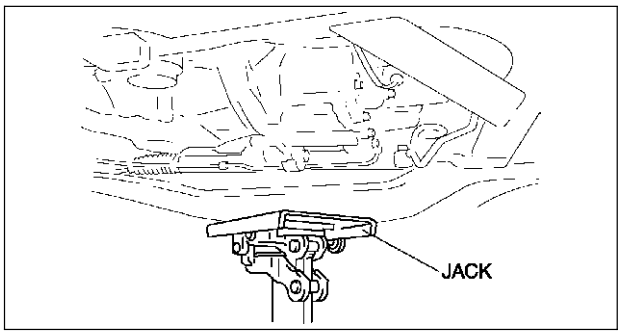

A6E7414W036

Front Crossmember Bushing Removal Note

1. Mark the crossmember as shown in the figure (rear upper side only).

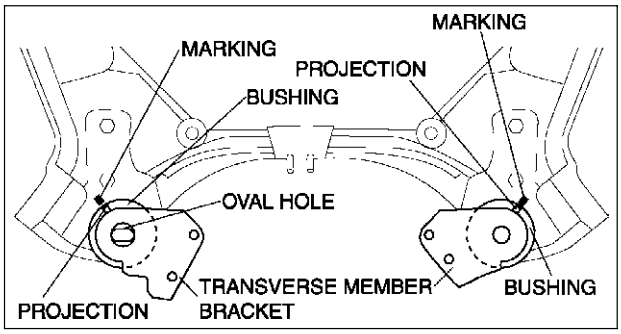

A6E7414W040

2. Remove the bushings using screw driver (-), being care not to damage the front crossmember.

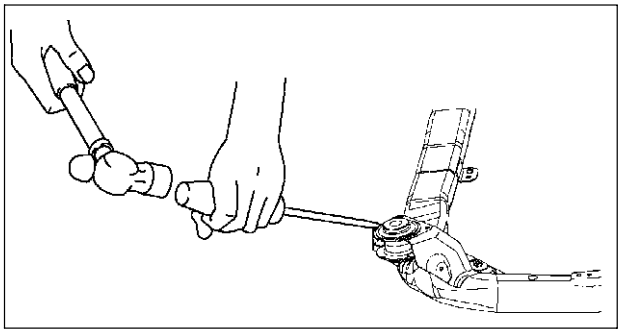

A6E7414W032

R

Front Crossmember Bushing Installation Note

1. Set the bushings as shown in the figure.

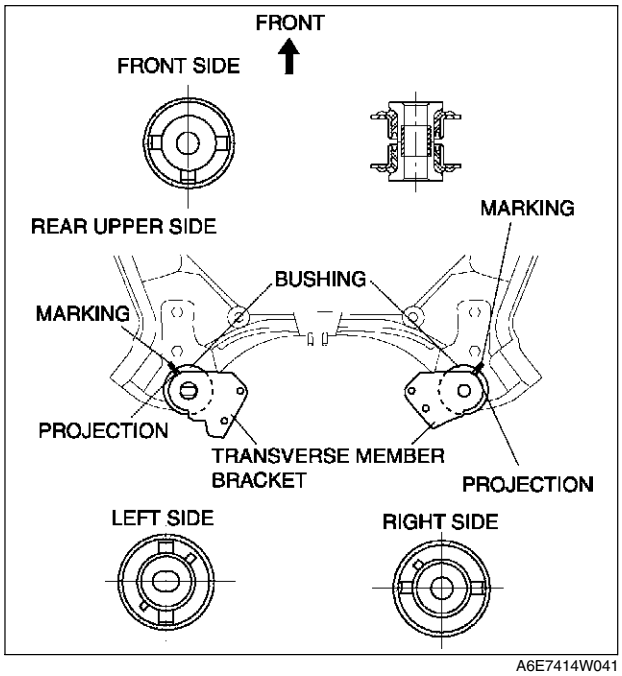

A6E7414W041

2. Install the bushing onto the crossmember using the **SSTs**.

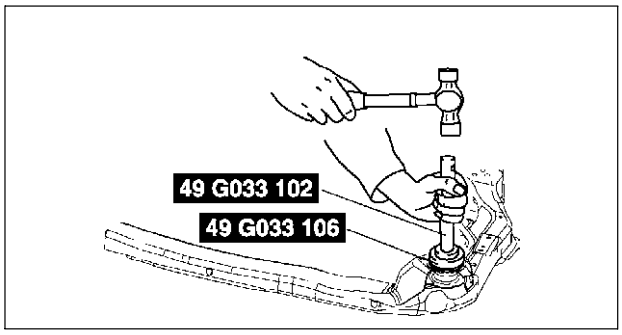

A6E7414W042

TRANSVERSE MEMBER REMOVAL/INSTALLATION

1. Remove in the order indicated in the table.

1	Transverse member and transverse cover
2	Transverse cover (European (L.H.D. U.K.) specs.) (See R–27 Transverse Cover Installation Note)
3	Transverse member

2. Install in the reverse order of removal.

A6E741434890W01

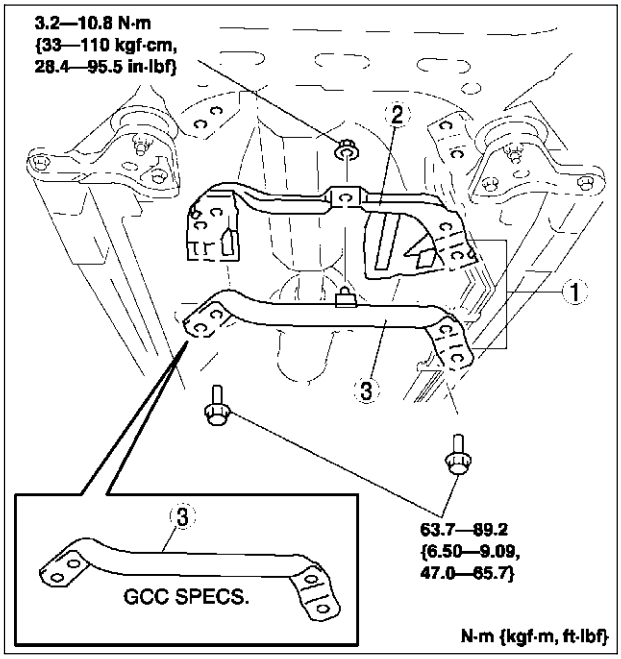

A6E7414W037

Transverse Cover Installation Note

1. Install the transverse cover.
2. Stake area A as shown in the figure.

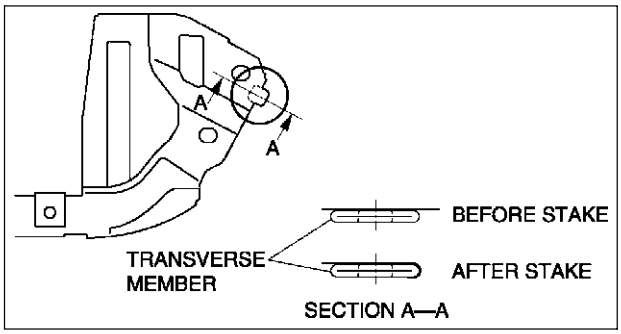

A6E7414W038

R

REAR SUSPENSION

REAR SHOCK ABSORBER REMOVAL/INSTALLATION

A6E741628700W01

Caution

- **Performing the following procedures without first removing the ABS wheel-speed sensor may possibly cause an open circuit in the harness if it is pulled by mistake. Before performing the following procedures, remove the ABS wheel-speed sensor (axle side) and fix it to an appropriate place where the sensor will not be pulled by mistake while servicing the vehicle.**

1. Remove in the order indicated in the table.
2. Install in the reverse order of removal.

1	Rear shock absorber and bracket
2	Bracket (See R–28 Bracket Installation Note)
3	Rear shock absorber

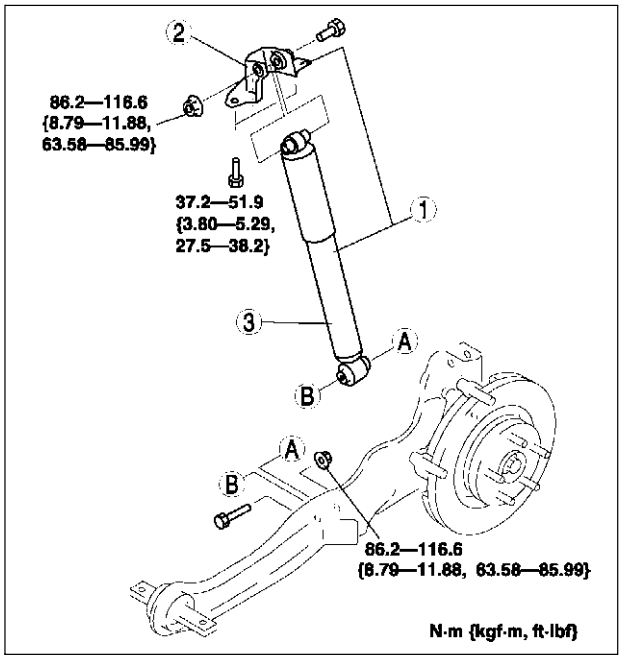

A6E7416W003

Bracket Installation Note

1. Install the bracket as shown in the figure.

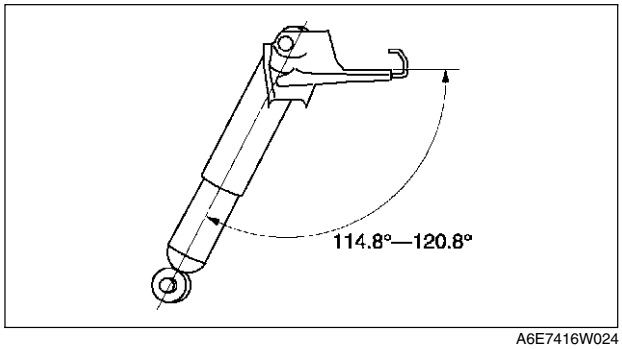

A6E7416W024

REAR SHOCK ABSORBER INSPECTION

A6E741628700W02

1. Inspect the rear shock absorber in the same way as the front shock absorber. (See R–12 FRONT SHOCK ABSORBER INSPECTION.)

REAR SHOCK ABSORBER DISPOSAL

A6E741628700W03

1. Dispose the rear shock absorber in the same way as the front shock absorber. (See R–12 FRONT SHOCK ABSORBER DISPOSAL.)

REAR COIL SPRING REMOVAL/INSTALLATION

A6E741628011W01

1. Remove the rear auto leveling sensor.
   (See T–32 REAR AUTO LEVELING SENSOR REMOVAL/INSTALLATION.)
2. Remove in the order indicated in the table.
3. Install in the reverse order of removal.
4. Adjust the headlight zeroset.
   (See T–31 HEADLIGHT ZEROSET.)
5. Inspect the rear wheel alignment.
   (See R–6 REAR WHEEL ALIGNMENT.)

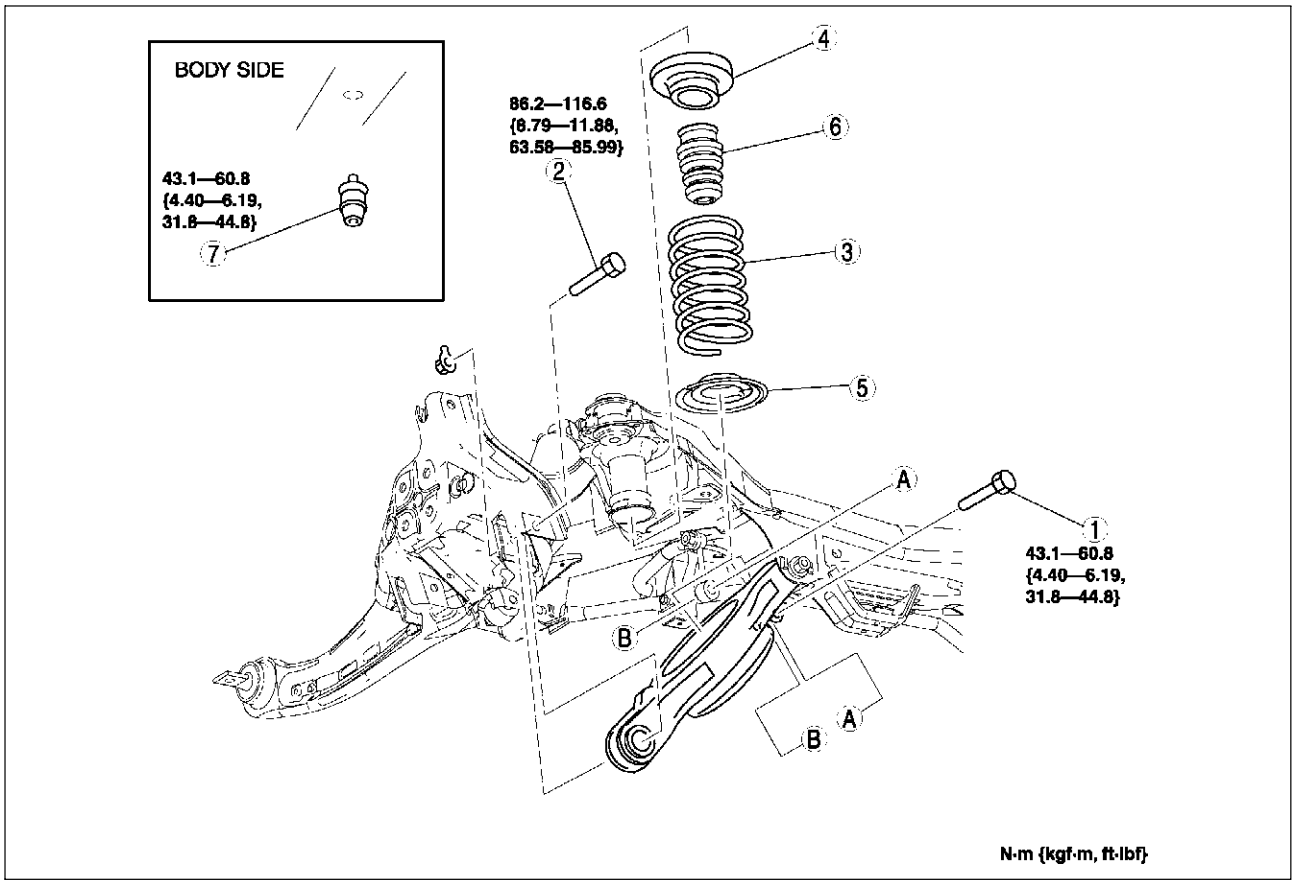

A6E7416W022

1	Bolt (stabilizer control link lower side)
2	Bolt (rear lower arm outer side) (See R–29 Bolt (Rear Lower Arm Outer Side) Removal Note)
3	Rear coil spring (See R–30 Rear Coil Spring Installation Note)

4	Upper spring seat rubber
5	Lower spring seat
6	Bound stopper (spring side)
7	Bound stopper (body side) (See R–30 Bound Stopper (Body Side) Removal/ Installation Note)

Bolt (Rear Lower Arm Outer Side) Removal Note

1. Support the lower arm with a jack.
2. Loosen the inner bolt of the lower arm.
3. Remove the outer bolt of the lower arm.

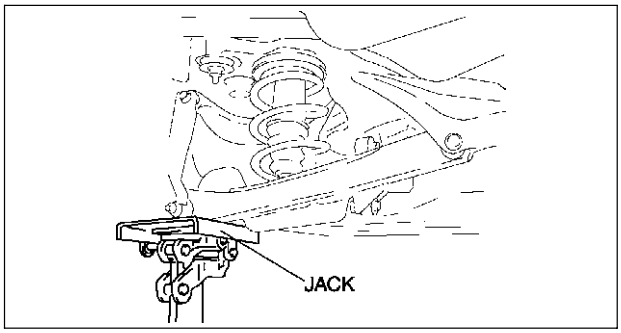

A6E7416W019

Bound Stopper (Body Side) Removal/Installation Note

1. Remove or/and install the bound stopper (body side) using the extension bar.

Rear Coil Spring Installation Note

1. Install the coil spring so that the distinguisher mark is located on under side.
2. Position the jack under the lower arm and jack up slowly.

   Warning
   - **Installing the coil spring is dangerous. The coil spring could fly off, and cause serious injure of death.**

3. Install the lower arm (outer side) bolt.

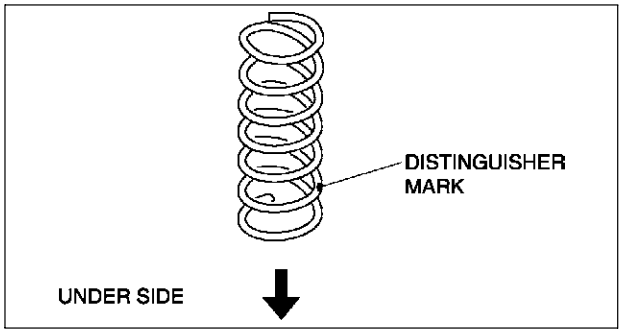

A6E7416W015

REAR LOWER ARM REMOVAL/INSTALLATION

A6E741628310W01

1. Remove in the order indicated in the table.
2. Install in the reverse order of removal.
3. Inspect the rear wheel alignment.
   (See R–6 REAR WHEEL ALIGNMENT.)

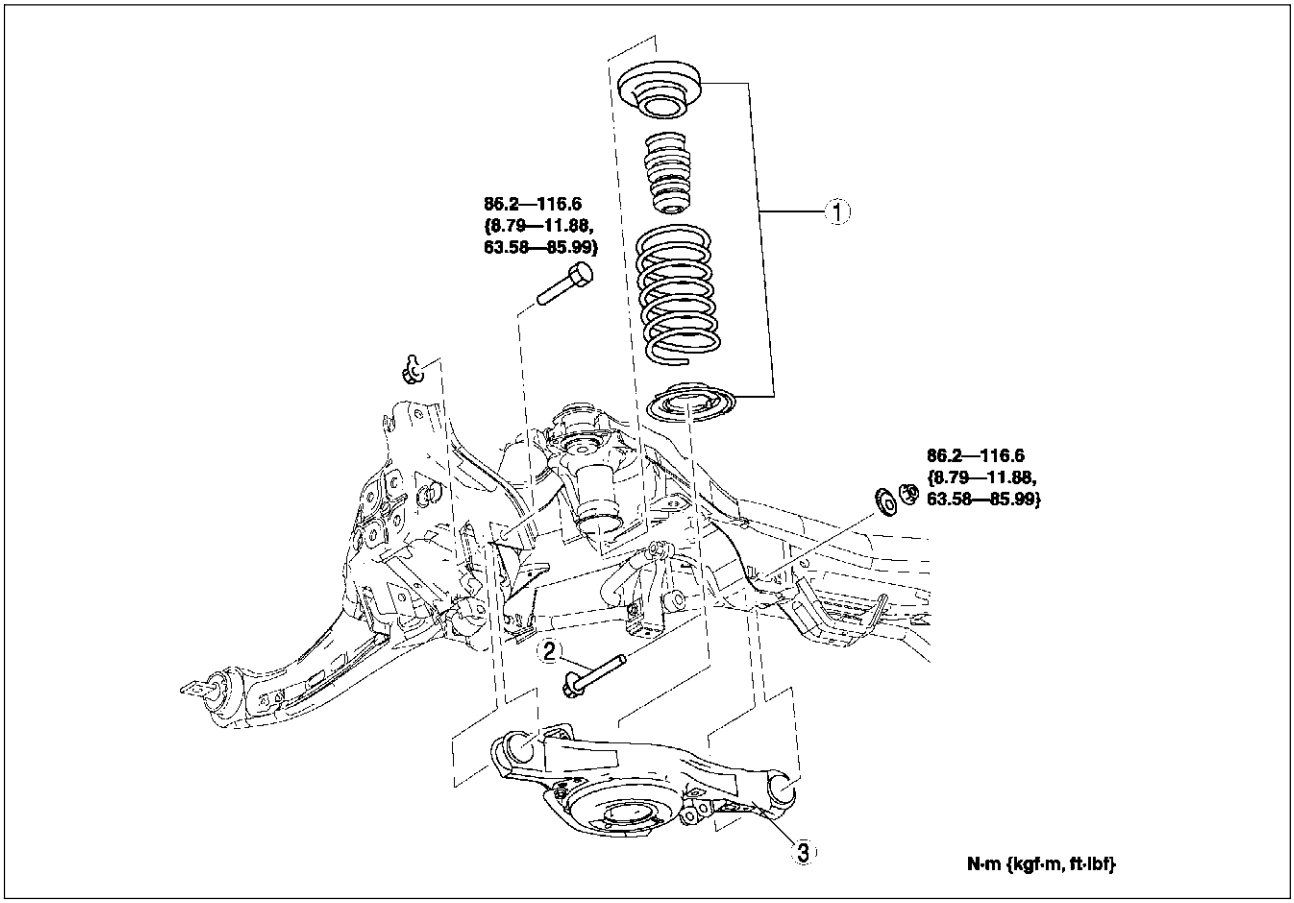

A6E7416W008

1	Rear coil spring component (See R–29 REAR COIL SPRING REMOVAL/INSTALLATION)
2	Bolt (rear lower arm inner side)
3	Rear lower arm

REAR UPPER ARM REMOVAL/INSTALLATION

A6E741628210W01

Caution

- **Performing the following procedures without first removing the ABS wheel-speed sensor may possibly cause an open circuit in the harness if it is pulled by mistake. Before performing the following procedures, remove the ABS wheel-speed sensor (axle side) and fix it to an appropriate place where the sensor will not be pulled by mistake while servicing the vehicle.**

1. Remove in the order indicated in the table.
2. Install in the reverse order of removal.
3. Inspect the rear wheel alignment.
   (See R–6 REAR WHEEL ALIGNMENT.)

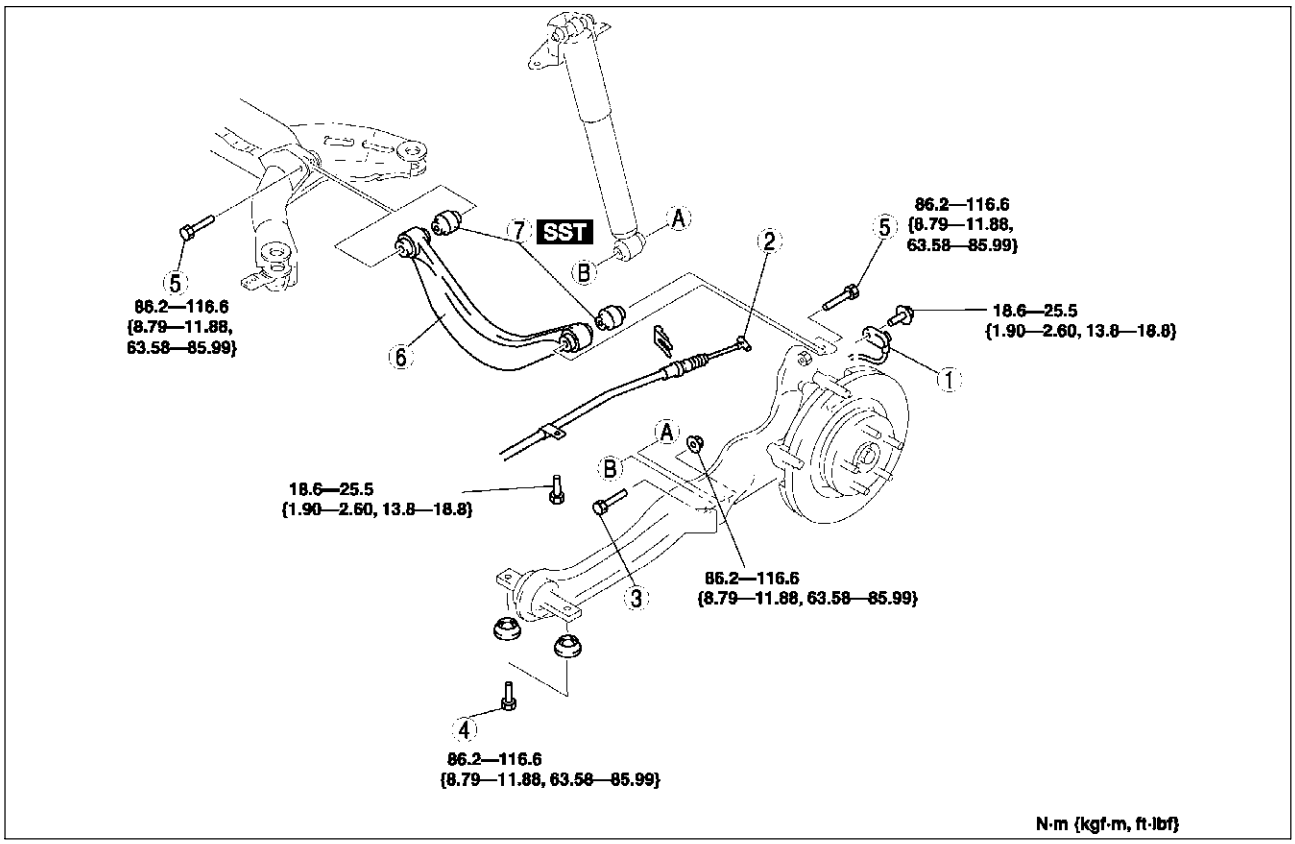

A6E7416W009

1	ABS wheel-speed sensor
2	Parking brake cable
3	Bolt (rear shock absorber lower side) (See R–32 Bolt (Rear Shock Absorber Lower Side) Removal Note)
4	Bolt (trailing link front side)

5	Bolt (rear upper arm) (See R–32 Bolt (Rear Upper Arm) Removal Note)
6	Rear upper arm
7	Rear upper arm bushing (See R–32 Rear Upper Arm Bushing Removal Note) (See R–32 Rear Upper Arm Bushing Installation Note)

Bolt (Rear Shock Absorber Lower Side) Removal Note

1. Support the trailing link with a jack.

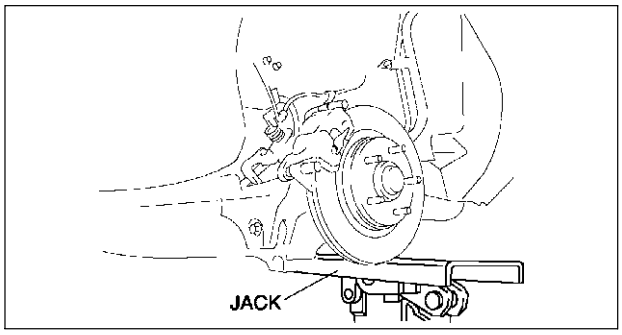

A6E7416W005

Bolt (Rear Upper Arm) Removal Note

1. Loosen the bolts on the inner and outer side of the lateral link.

Rear Upper Arm Bushing Removal Note

1. Press the upper arm bushing out using the **SSTs**.

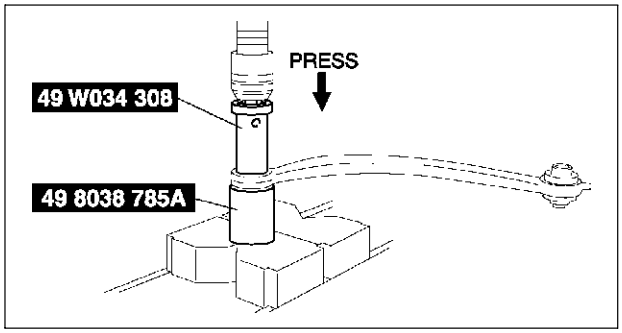

A6E7416W010

Rear Upper Arm Bushing Installation Note

1. Mark the new bushing as shown in the figure.

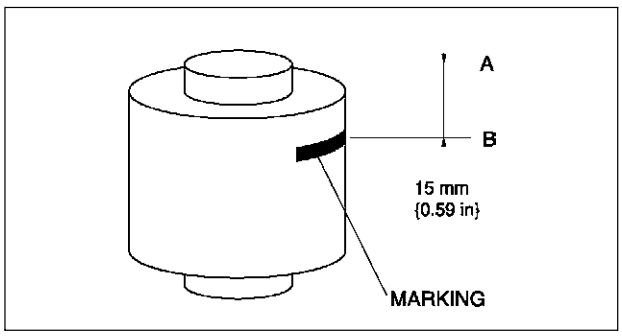

A6E7416W011

2. Press the bushing in to the marking using the **SSTs**.

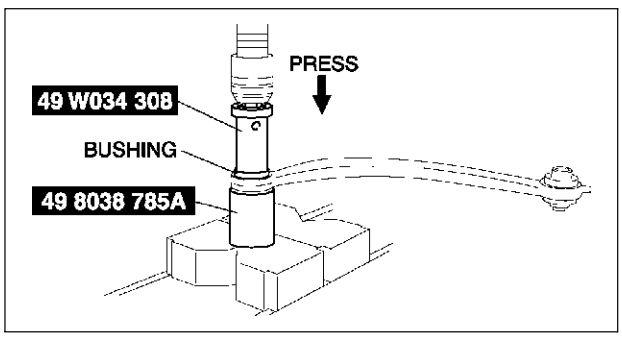

A6E7416W012

3. Verify that clearance distance A—B is **14.0 mm—16.0 mm {0.56 in-0.62 in}**.

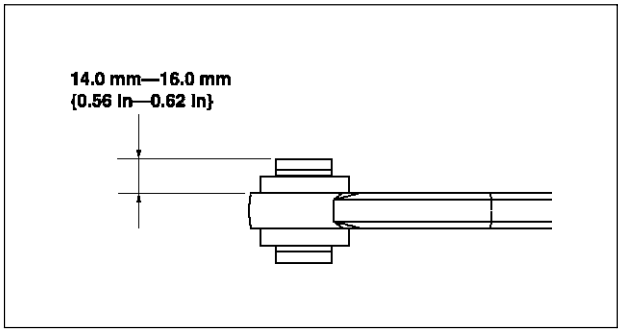

A6E7416W013

REAR LATERAL LINK REMOVAL/INSTALLATION

A6E741628600W01

Caution

- **Performing the following procedures without first removing the ABS wheel-speed sensor may possibly cause an open circuit in the harness if it is pulled by mistake. Before performing the following procedures, remove the ABS wheel-speed sensor (axle side) and fix it to an appropriate place where the sensor will not be pulled by mistake while servicing the vehicle.**

1. Remove in the order indicated in the table.
2. Install in the reverse order of removal.
3. Inspect the rear wheel alignment.
   (See R–6 REAR WHEEL ALIGNMENT.)

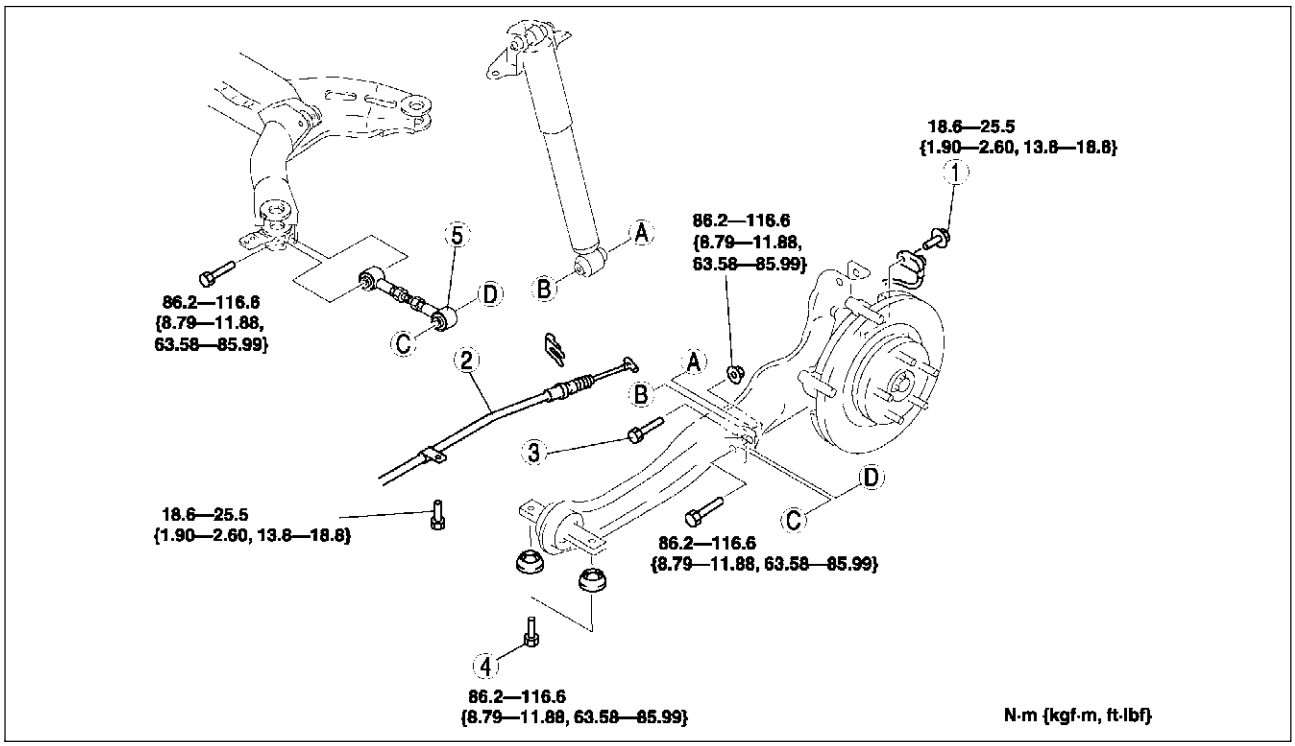

A6E7416W017

1	ABS wheel-speed sensor
2	Parking brake cable
3	Bolt (rear shock absorber lower side) (SeeR–34 Bolt (Rear Shock Absorber Lower Side) Removal Note)
4	Bolt (trailing link front side)
5	Rear lateral link

Bolt (Rear Shock Absorber Lower Side) Removal Note

1. Support the trailing link with a jack.

Caution

- **Removing the trailing link is dangerous. The trailing link could fall and cause serious injury or death. Verify that the jack securely supports the trailing link.**

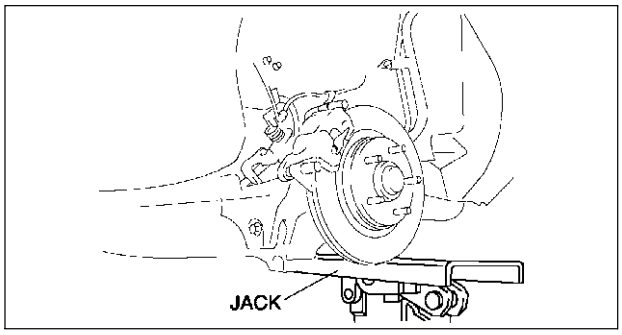

A6E7416W005

REAR STABILIZER REMOVAL/INSTALLATION

A6E741628100W01

1. Remove the rear auto leveling sensor.
   (See T–32 REAR AUTO LEVELING SENSOR REMOVAL/INSTALLATION.)
2. Remove in the order indicated in the table.
3. Install in the reverse order of removal.
4. Adjust the headlight zeroset.
   (See T–31 HEADLIGHT ZEROSET.)

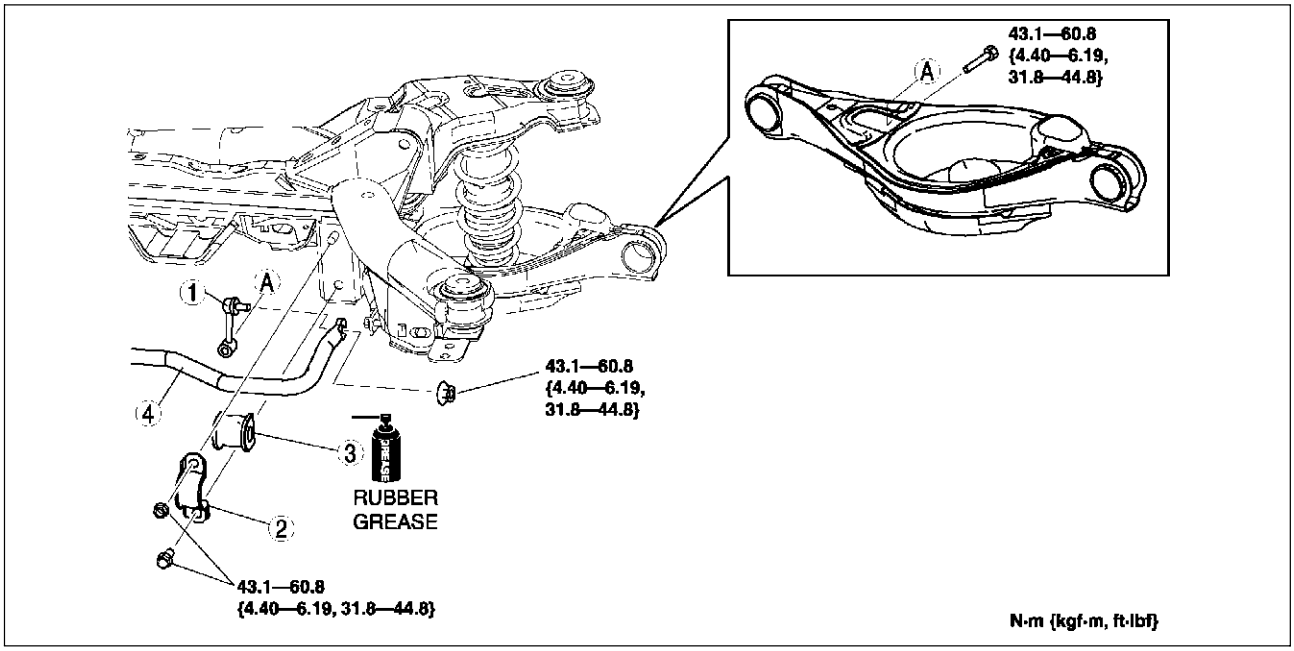

A6E7416W004

1	Stabilizer control link
2	Stabilizer bracket

3	Bushing
4	Rear stabilizer

STABILIZER CONTROL LINK INSPECTION

A6E741634150W01

1. Remove the stabilizer control link from the vehicle.
2. Inspect for bending and damage.
3. Measure the ball joint starting torque.
   (1) Rock the ball joint stud side to side 10 times.
   (2) Rotate the ball joint stud 10 times.
   (3) Measure the starting torque using a suitable Allen socket and a torque wrench.

Starting torque
0.23—0.47 N·m
{2.4—4.7 kgf·cm, 2.1—4.1 in·lbf}

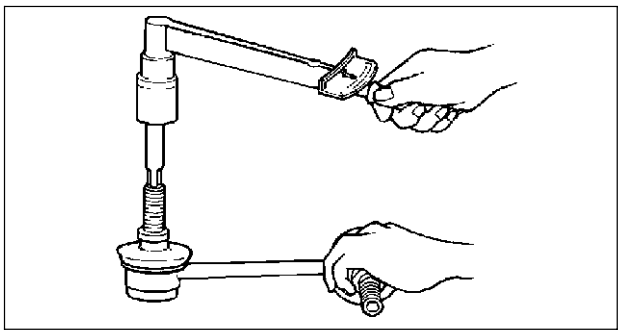

A6E7414W021

TRAILING LINK REMOVAL/INSTALLATION

A6E741628200W01

Caution
- **Performing the following procedures without first removing the ABS wheel-speed sensor may possibly cause an open circuit in the harness if it is pulled by mistake. Before performing the following procedures, remove the ABS wheel-speed sensor (axle side) and fix it to an appropriate place where the sensor will not be pulled by mistake while servicing the vehicle.**

1. Remove the rear auto leveling sensor.
   (See T–32 REAR AUTO LEVELING SENSOR REMOVAL/INSTALLATION.)
2. Remove in the order indicated in the table.
3. Install in the reverse order of removal.
4. Adjust the headlight zeroset.
   (See T–31 HEADLIGHT ZEROSET.)
5. Inspect the rear wheel alignment.
   (See R–6 REAR WHEEL ALIGNMENT.)

R

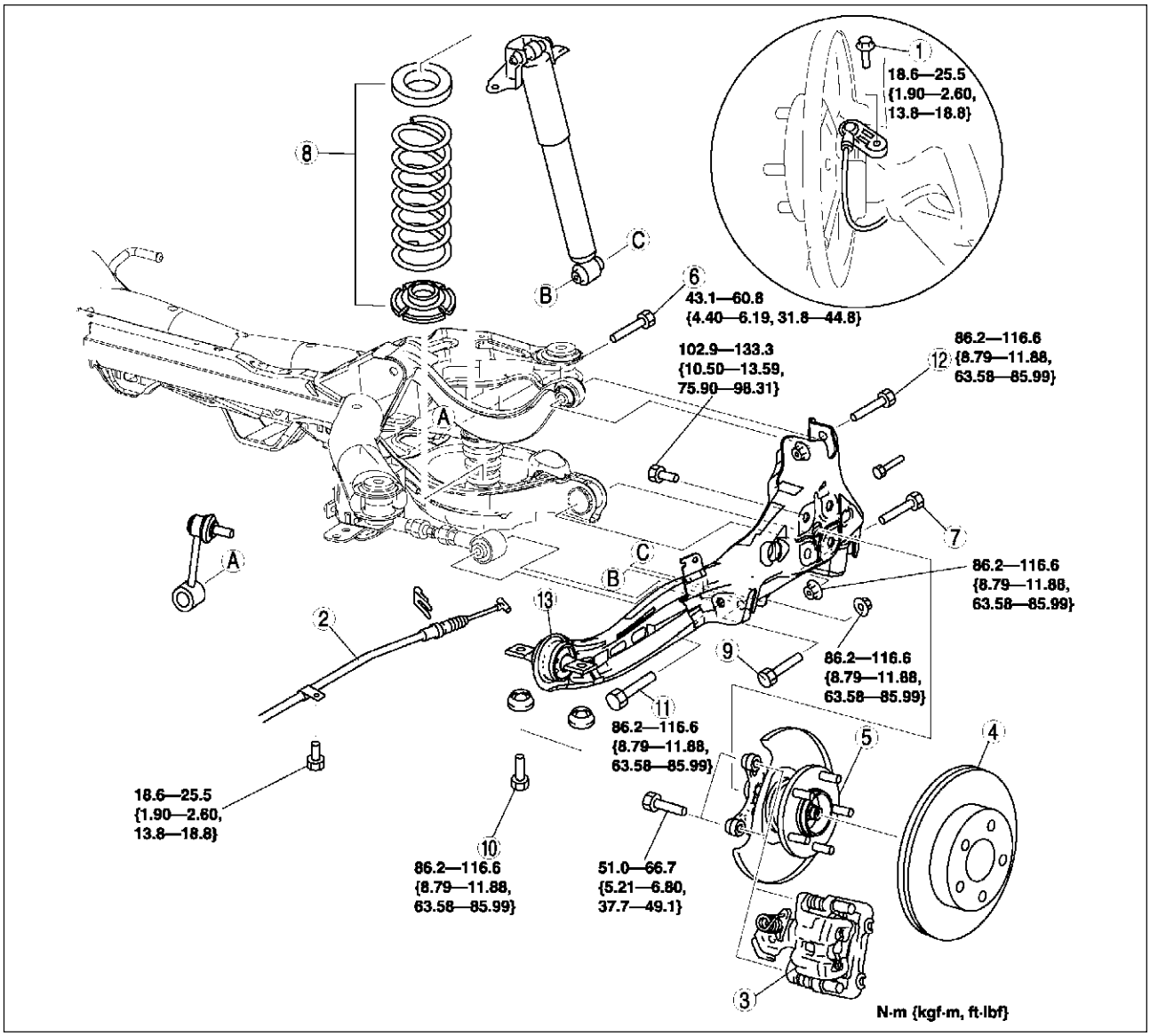

A6E7416W018

1	ABS wheel-speed sensor
2	Parking brake cable
3	Calliper component (See R–37 Caliper Component Removal Note)
4	Disc plate
5	Spindle and hub component (See M–10 WHEEL HUB, HUB SPINDLE REMOVAL/INSTALLATION)
6	Bolt (stabilizer control link lower side)
7	Bolt (rear lower arm outer side) (See R–29 Bolt (Rear Lower Arm Outer Side) Removal Note)
8	Spring component

9	Bolt (rear shock absorber lower side)
10	Bolt (trailing link front side) (See R–37 Bolt (Trailing Link Front Side) Removal Note) (See R–37 Bolt (Trailing Link Front Side) Installation Note)
11	Bolt (rear lateral link outer side) (See R–37 Bolt (Rear Lateral Link Outer Side) Removal Note)
12	Bolt (rear upper arm outer side)
13	Trailing link

Caliper Component Removal Note

1. Suspend the caliper aside with cable.

Bolt (Trailing Link Front Side) Removal Note

1. Support the trailing link with a jack.

Caution

- **Removing the trailing link is dangerous. The trailing link could fall and cause serious injury or death. Verify that the jack securely supports the trailing link.**

2. Remove the bolts (trailing link front side).

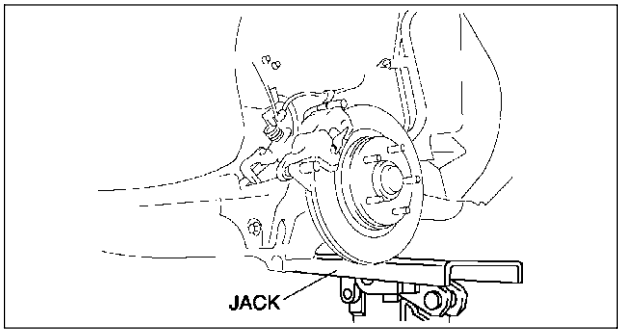

A6E7416W005

Bolt (Rear Lateral Link Outer Side) Removal Note

1. Loosen the bolt (lateral link inner side).
2. Remove the bolt (lateral link outer side).

Bolt (Trailing Link Front Side) Installation Note

1. Support the trailing link with a jack.
2. Tighten the bolts (trailing link front side).

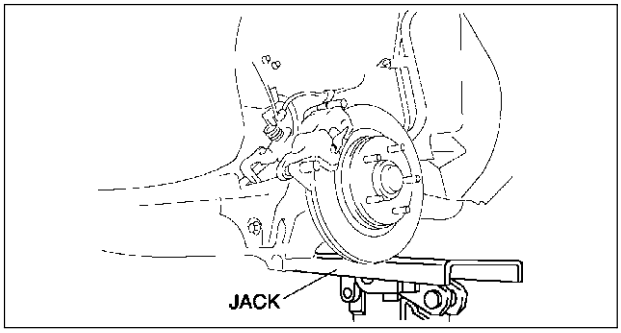

A6E7416W005

REAR CROSSMEMBER REMOVAL/INSTALLATION

A6E741628400W01

Caution

- **Performing the following procedures without first removing the ABS wheel-speed sensor may possibly cause an open circuit in the harness if it is pulled by mistake. Before performing the following procedures, remove the ABS wheel-speed sensor (axle side) and fix it to an appropriate place where the sensor will not be pulled by mistake while servicing the vehicle.**

1. Remove the rear auto leveling sensor and harness.
   (See T–32 REAR AUTO LEVELING SENSOR REMOVAL/INSTALLATION.)
2. Remove the middle pipe.
   (See F–35 EXHAUST SYSTEM REMOVAL/INSTALLATION.)
3. Remove in the order indicated in the table.
4. Install in the reverse order of removal.
5. Adjust the headlight zeroset.
   (See T–31 HEADLIGHT ZEROSET.)
6. Inspect the rear wheel alignment.
   (See R–6 REAR WHEEL ALIGNMENT.)

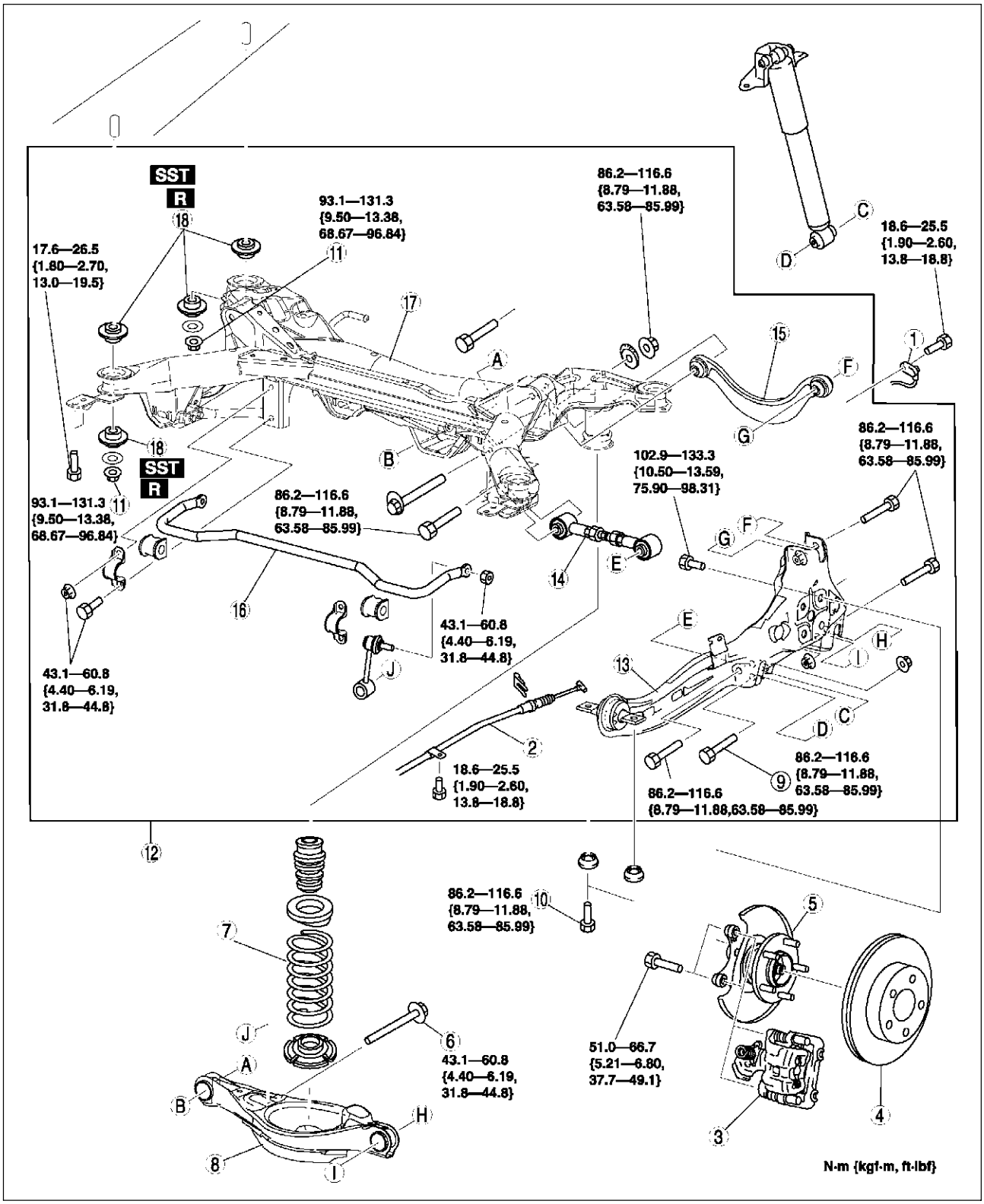

A6E7416W020

1	ABS wheel-speed sensor
2	Parking brake cable
3	Caliper component (See R–39 Caliper Component Removal Note)
4	Disc plate

5	Spindle and hub component (See M–10 WHEEL HUB, HUB SPINDLE REMOVAL/INSTALLATION)
6	Bolt (stabilizer control link)
7	Rear coil spring (See R–29 REAR COIL SPRING REMOVAL/INSTALLATION)

8	Rear lower arm (See R–30 REAR LOWER ARM REMOVAL/ INSTALLATION)
9	Bolt (rear shock absorber lower side)
10	Bolt (trailing link front side) (See R–39 Bolt (Trailing Link Front Side) Removal Note) (See R–40 Bolt (Trailing Link Front Side) Installation Note)
11	Nut (crossmember)
12	Crossmember component (See R–39 Crossmember Component Removal Note)
13	Trailing link
14	Rear lateral link
15	Rear upper arm
16	Rear stabilizer
17	Rear crossmember
18	Rear crossmember Bushing (See R–39 Rear Crossmember Bushing Removal Note) (See R–40 Rear Crossmember Bushing Installation Note)

Caliper Component Removal Note

1. Remove the caliper, and suspend it aside with cable.

Bolt (Trailing Link Front Side) Removal Note

1. Support the trailing link with a jack.
2. Loosen the bolt (lateral link inner side).

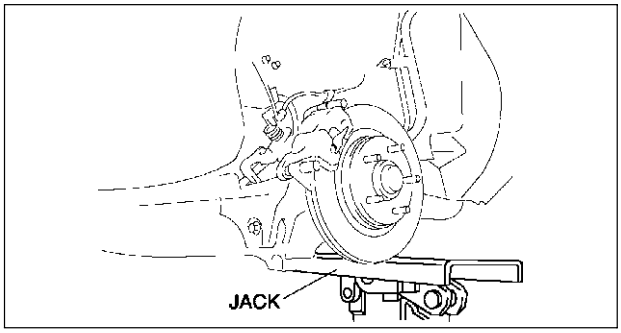

A6E7416W005

Crossmember Component Removal Note

1. Support the crossmember component using a jack and remove the nuts.

   Warning
   - **Removing the crossmember is dangerous. The crossmember component could fall and cause serious injury or death. Verify that the jack securely supports the crossmember component.**

2. Remove the crossmember component.

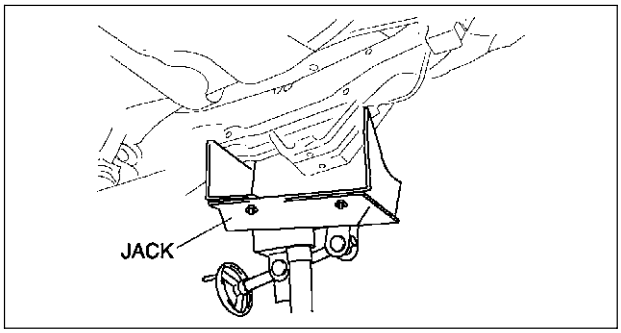

A6E7416W014

Rear Crossmember Bushing Removal Note

1. Remove the bushing using screw driver (-), being care not to damage the rear crossmember.

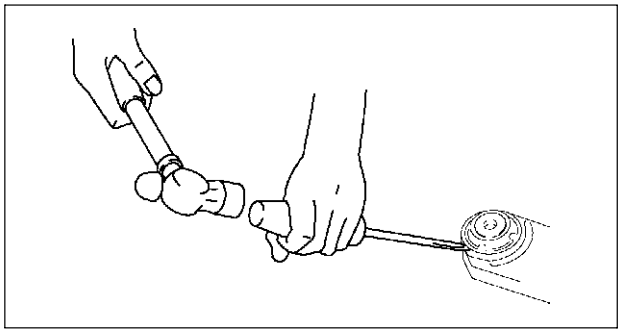
A6E7416W001

R

Rear Crossmember Bushing Installation Note

1. Set the bushings as shown in the figure.

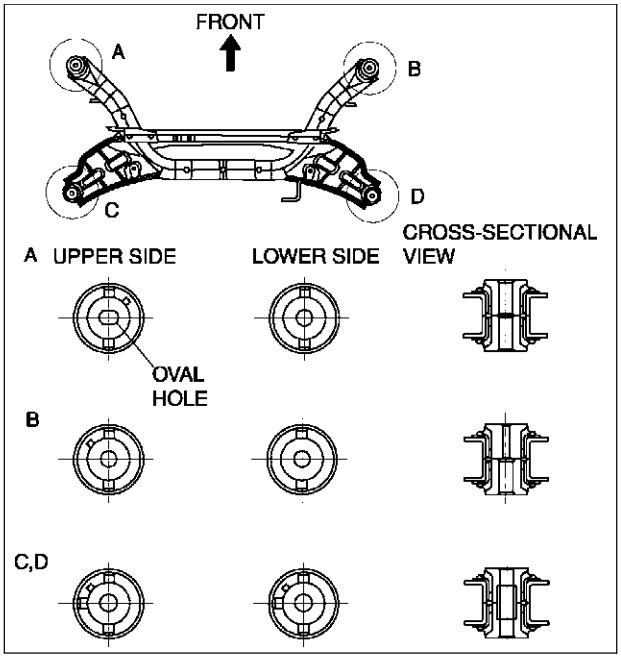

A6E7416W021

2. Tap the bushing onto the rear crossmember using the **SSTs**.

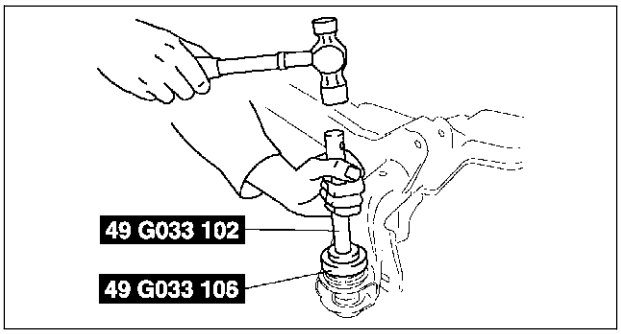

A6E7416W002

Bolt (Trailing Link Front Side) Installation Note

1. Support the trailing link with a jack.
2. Tighten the bolts (trailing link front side).

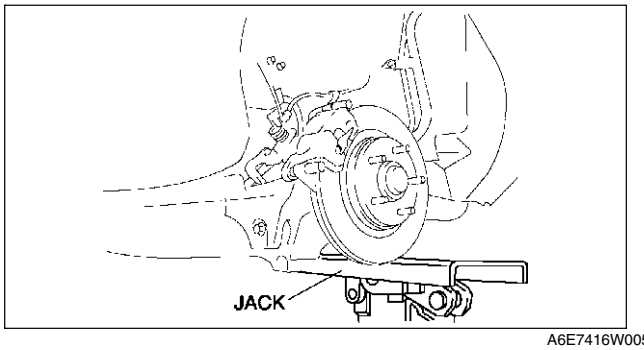

A6E7416W005

BODY

LOCATION INDEX S-4
EXTERIOR S-4
INTERIOR S-6
DOOR S-9
BONNET S-10
BONNET REMOVAL/INSTALLATION S-10
BONNET ADJUSTMENT S-10
FRONT FENDER PANEL S-12
FRONT FENDER PANEL REMOVAL/INSTALLATION S-12
DOOR S-13
FRONT DOOR STRUCTURAL VIEW S-13
REAR DOOR STRUCTURAL VIEW S-14
FRONT DOOR REMOVAL/INSTALLATION S-15
REAR DOOR REMOVAL/INSTALLATION S-15
DOOR ADJUSTMENT S-16
FRONT DOOR GLASS REMOVAL/INSTALLATION S-16
REAR DOOR GLASS REMOVAL/INSTALLATION S-17
FRONT DOOR UNIT REMOVAL/INSTALLATION S-18
REAR DOOR UNIT REMOVAL/INSTALLATION S-18
FRONT DOOR LATCH AND LOCK ACTUATOR REMOVAL/INSTALLATION S-19
REAR DOOR LATCH AND LOCK ACTUATOR REMOVAL/INSTALLATION S-19
FRONT DOOR KEY CYLINDER REMOVAL/INSTALLATION S-20
FRONT OUTER HANDLE REMOVAL/INSTALLATION S-21
REAR OUTER HANDLE REMOVAL/INSTALLATION S-21
INNER HANDLE REMOVAL/INSTALLATION S-22
REGULATOR HANDLE REMOVAL S-22
REGULATOR HANDLE INSTALLATION S-22
POWER WINDOW SYSTEM S-23
INITIAL SETTING S-23
TWO-STEP DOWN FUNCTION OPERATIVE/NON-OPERATIVE SWITCHING PROCEDURE S-23
DOOR GLASS POSITION CHANGE PROCEDURE S-24
POWER WINDOW SWITCH REMOVAL/INSTALLATION S-25
POWER WINDOW MAIN SWITCH INSPECTION S-26
POWER WINDOW SUBSWITCH INSPECTION S-28
POWER WINDOW REGULATOR REMOVAL/INSTALLATION S-28
POWER WINDOW MOTOR REMOVAL/INSTALLATION S-29
POWER WINDOW MOTOR INSPECTION S-29
POWER DOOR LOCK SYSTEM S-30
FRONT DOOR LOCK ACTUATOR INSPECTION S-30
REAR DOOR LOCK ACTUATOR INSPECTION S-32
TRUNK LID LOCK ACTUATOR INSPECTION S-32
LIFTGATE LOCK ACTUATOR INSPECTION S-33
DOOR LOCK TIMER UNIT REMOVAL/INSTALLATION S-33
DOOR LOCK TIMER UNIT INSPECTION S-34
DOOR LOCK TIMER UNIT ID CODE CHANGE S-36
TRANSMITTER BATTERY REPLACEMENT S-37
TRANSMITTER BATTERY INSPECTION S-38
TRUNK LID S-39
TRUNK LID REMOVAL/INSTALLATION S-39
TRUNK LID DISASSEMBLY/ASSEMBLY S-40
TRUNK LID ADJUSTMENT S-41
STAY DAMPER DISPOSAL S-41
LIFTGATE S-42
LIFTGATE REMOVAL/INSTALLATION S-42
LIFTGATE DISASSEMBLY/ASSEMBLY S-44
STAY DAMPER DISPOSAL S-44
LIFTGATE ADJUSTMENT S-45
FUEL-FILLER LID AND OPENER S-46
FUEL-FILLER LID AND OPENER REMOVAL/INSTALLATION S-46
FUEL-FILLER LID ADJUSTMENT S-46
BUMPER S-47
FRONT BUMPER REMOVAL/INSTALLATION S-47
FRONT BUMPER DISASSEMBLY/ASSEMBLY S-48
BUMPER REINFORCEMENT REMOVAL/INSTALLATION S-48
REAR BUMPER REMOVAL/INSTALLATION S-49
EXTERIOR ATTACHMENT S-50
RADIATOR GRILLE REMOVAL/INSTALLATION S-50
COWL GRILLE REMOVAL/INSTALLATION S-50
FRONT FLAP REMOVAL/INSTALLATION S-51
REAR FLAP REMOVAL/INSTALLATION S-51
REAR DOOR GARNISH REMOVAL S-51
REAR DOOR GARNISH INSTALLATION S-52
SIDE PROTECTOR REMOVAL S-52
SIDE PROTECTOR INSTALLATION S-53
EXTRACTOR CHAMBER REMOVAL/INSTALLATION S-53
REAR FINISHER REMOVAL/INSTALLATION S-54
REAR SPOILER REMOVAL/INSTALLATION S-54
ROOF CARRIER BRACKET REMOVAL/INSTALLATION S-54

MOLDING S-55
FRONT BELTLINE MOLDING REMOVAL S-55
FRONT BELTLINE MOLDING INSTALLATION S-55
REAR BELTLINE MOLDING REMOVAL S-56
REAR BELTLINE MOLDING INSTALLATION S-56
ROOF MOLDING REMOVAL S-57
ROOF MOLDING INSTALLATION S-57
OUTSIDE MIRROR S-58
POWER OUTSIDE MIRROR REMOVAL/INSTALLATION S-58
POWER OUTSIDE MIRROR DISASSEMBLY/ASSEMBLY S-58
POWER OUTSIDE MIRROR INSPECTION S-59
POWER OUTSIDE MIRROR SWITCH REMOVAL/INSTALLATION S-60
POWER OUTSIDE MIRROR SWITCH INSPECTION S-60
REARVIEW MIRROR S-61
REARVIEW MIRROR REMOVAL S-61
REARVIEW MIRROR INSTALLATION S-61
BASE REMOVAL S-61
BASE INSTALLATION S-62
REAR WINDOW DEFROSTER S-63
FILAMENT REPAIR S-63
FILAMENT INSPECTION S-63
WINDOW GLASS S-64
WINDSHIELD REMOVAL S-64
WINDSHIELD INSTALLATION S-65
QUARTER WINDOW GLASS REMOVAL/INSTALLATION S-67
REAR WINDOW GLASS REMOVAL S-68
REAR WINDOW GLASS INSTALLATION S-70
SLIDING SUNROOF S-74
DEFLECTOR REMOVAL/INSTALLATION S-74
GLASS PANEL REMOVAL/INSTALLATION S-74
GLASS PANEL ADJUSTMENT S-75
FRONT DRAIN HOSE REMOVAL S-75
FRONT DRAIN HOSE INSTALLATION S-75
REAR DRAIN HOSE REMOVAL S-76
REAR DRAIN HOSE INSTALLATION S-76
SUNROOF UNIT REMOVAL/INSTALLATION S-76
SUNROOF UNIT DISASSEMBLY/ASSEMBLY S-77
SUNROOF MOTOR REMOVAL S-79
SUNROOF MOTOR INSTALLATION S-79
SUNROOF MOTOR INSPECTION S-79
SUNROOF RELAY INSPECTION S-80
SUNROOF SWITCH REMOVAL/INSTALLATION S-81
SUNROOF SWITCH INSPECTION S-81
DASHBOARD AND CONSOLE S-82
DASHBOARD REMOVAL/INSTALLATION S-82
DASHBOARD DISASSEMBLY/ASSEMBLY S-83
SIDE PANEL REMOVAL/INSTALLATION S-83
COLUMN COVER REMOVAL/INSTALLATION S-84
METER HOOD REMOVAL/INSTALLATION S-84
LOWER PANEL REMOVAL/INSTALLATION S-84
CENTER BOX REMOVAL/INSTALLATION S-85
GLOVE COMPARTMENT REMOVAL/INSTALLATION S-85
CONSOLE REMOVAL/INSTALLATION S-86
CONSOLE DISASSEmBLY/ASSEMBLY S-86
TRIM S-87
A-PILLAR TRIM REMOVAL S-87
A-PILLAR TRIM INSTALLATION S-87
B-PILLAR LOWER TRIM REMOVAL/INSTALLATION S-88
B-PILLAR UPPER TRIM REMOVAL/INSTALLATION S-88
FRONT SIDE TRIM REMOVAL/INSTALLATION S-88
FRONT SCUFF PLATE REMOVAL/INSTALLATION S-89
REAR SCUFF PLATE REMOVAL/INSTALLATION S-89
C-PILLAR TRIM REMOVAL/INSTALLATION S-89
FRONT DOOR TRIM REMOVAL/INSTALLATION S-90
REAR DOOR TRIM REMOVAL/INSTALLATION S-90
TIRE HOUSE TRIM REMOVAL/INSTALLATION S-91
REAR PACKAGE TRIM REMOVAL/INSTALLATION S-92
TRUNK SIDE TRIM REMOVAL/INSTALLATION S-92
TRUNK SIDE UPPER TRIM REMOVAL/INSTALLATION S-93
TRUNK LID TRIM REMOVAL/INSTALLATION S-93
TRUNK END TRIM REMOVAL/INSTALLATION S-93
LIFTGATE UPPER TRIM REMOVAL/INSTALLATION S-94
LIFTGATE SIDE TRIM REMOVAL/INSTALLATION S-94
LIFTGATE LOWER TRIM REMOVAL/INSTALLATION S-95
HEADLINER S-96
HEADLINER REMOVAL/INSTALLATION S-96
SHOCK ABSORBING PAD REMOVAL/INSTALLATION S-97
ASSIST HANDLE REMOVAL/INSTALLATION S-97
SUNVISOR REMOVAL/INSTALLATION S-98
FLOOR COVERING S-99
FRONT FLOOR COVERING REMOVAL/INSTALLATION S-99
SEAT BELT S-100
FRONT SEAT BELT REMOVAL/INSTALLATION S-100
REAR SIDE SEAT BELT REMOVAL/INSTALLATION S-101
REAR CENTER SEAT BELT REMOVAL/INSTALLATION S-101
FRONT BUCKLE REMOVAL/INSTALLATION S-102
REAR BUCKLE REMOVAL/INSTALLATION S-102
SEAT BELT INSPECTION S-103
BUCKLE SWITCH INSPECTION S-104
CHILD RESTRAINT SEAT ANCHOR REMOVAL/INSTALLATION S-104

SEAT S-105
FRONT SEAT REMOVAL/INSTALLATION S-105
FRONT SEAT DISASSEMBLY/ASSEMBLY ... S-106
REAR SEAT REMOVAL/INSTALLATION S-110
REAR SEAT DISASSEMBLY/ASSEMBLY S-112
REMOTE HANDLE LEVER REMOVAL/INSTALLATION S-114
SEAT BACK STRIKER REMOVAL/INSTALLATION S-115
POWER SEAT SWITCH INSPECTION S-115
FRONT TILT MOTOR INSPECTION S-116
REAR TILT MOTOR INSPECTION S-116
SLIDE MOTOR INSPECTION S-116
RECLINER MOTOR INSPECTION S-116
SEAT WARMER SWITCH REMOVAL/INSTALLATION S-117
SEAT WARMER SWITCH INSPECTION S-117
SEAT WARMER UNIT INSPECTION S-118
BODY SHELL S-119
SHROUD PANEL REMOVAL/INSTALLATION S-119
COWL PANEL REMOVAL/INSTALLATION S-119
TROUBLESHOOTING [POWER WINDOW SYSTEM] S-120
INTERMITTENT CONCERN TROUBLESHOOTING S-120
FOREWORD S-120
BASIC POWER WINDOW SYSTEM INSPECTION S-121
TROUBLESHOOTING INDEX S-123
NO. 1 DRIVER-SIDE FRONT WINDOW DOES NOT GO UP AND DOWN IN AUTOMATIC MODE S-123
NO. 2 DRIVER-SIDE FRONT WINDOW DOES NOT REVERSE, EVEN WHEN ENCOUNTERING A FOREIGN OBJECT IN ITS PATH S-126
NO. 3 DRIVER-SIDE FRONT WINDOW REVERSES EVEN THOUGH THE GLASS DOES NOT ENCOUNTER A FOREIGN OBJECT WHILE IT IS GOING UP IN AUTOMATIC MODE S-127
TROUBLESHOOTING [KEYLESS ENTRY SYSTEM] S-128
FOREWORD S-128
KEYLESS ENTRY SYSTEM CHECK SHEET S-129
KEYLESS ENTRY SYSTEM PRELIMINARY INSPECTION S-129
ON-BOARD DIAGNOSTIC FUNCTION S-130
TROUBLESHOOTING INDEX S-131
NO. 1 ONE OR MORE ON-BOARD DIAGNOSTIC FUNCTIONS INOPERATIVE S-131
NO. 2 ALL ON-BOARD DIAGNOSTIC FUNCTIONS INOPERATIVE S-132
NO. 3 TRANSMITTER ID CODE CANNOT BE REPROGRAMMED S-133

LOCATION INDEX

EXTERIOR

Front

A6E770001086W01

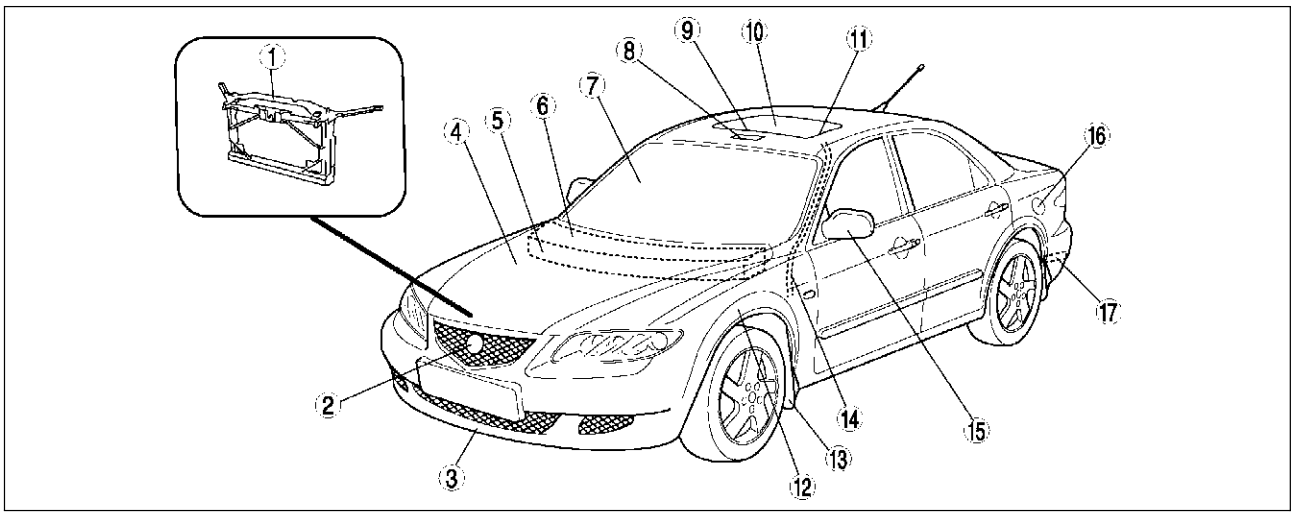

A6E7700W001

1	Shroud panel (See S–119 SHROUD PANEL REMOVAL/INSTALLATION)
2	Radiator grille (See S–50 RADIATOR GRILLE REMOVAL/INSTALLATION)
3	Front bumper (See S–47 FRONT BUMPER REMOVAL/INSTALLATION) (See S–48 FRONT BUMPER DISASSEMBLY/ASSEMBLY) Bumper reinforcement (See S–48 BUMPER REINFORCEMENT REMOVAL/INSTALLATION)
4	Bonnet (See S–10 BONNET REMOVAL/INSTALLATION) (See S–10 BONNET ADJUSTMENT)
5	Cowl panel (See S–119 COWL PANEL REMOVAL/INSTALLATION)
6	Cowl grille (See S–50 COWL GRILLE REMOVAL/INSTALLATION)
7	Windshield (See S–64 WINDSHIELD REMOVAL) (See S–65 WINDSHIELD INSTALLATION)
8	Sunroof motor and relay (See S–79 SUNROOF MOTOR REMOVAL) (See S–79 SUNROOF MOTOR INSTALLATION) (See S–79 SUNROOF MOTOR INSPECTION) (See S–80 SUNROOF RELAY INSPECTION)
9	Deflector (See S–74 DEFLECTOR REMOVAL/INSTALLATION)
10	Glass panel (See S–74 GLASS PANEL REMOVAL/INSTALLATION) (See S–75 GLASS PANEL ADJUSTMENT)
11	Sunroof unit (See S–76 SUNROOF UNIT REMOVAL/INSTALLATION) (See S–77 SUNROOF UNIT DISASSEMBLY/ASSEMBLY)
12	Front fender panel (See S–12 FRONT FENDER PANEL REMOVAL/INSTALLATION)
13	Front flap (See S–51 FRONT FLAP REMOVAL/INSTALLATION)
14	Front drain hose (See S–75 FRONT DRAIN HOSE REMOVAL) (See S–75 FRONT DRAIN HOSE INSTALLATION)
15	Power outside mirror (See S–58 POWER OUTSIDE MIRROR REMOVAL/INSTALLATION) (See S–58 POWER OUTSIDE MIRROR DISASSEMBLY/ASSEMBLY) (See S–59 POWER OUTSIDE MIRROR INSPECTION)
16	Fuel-filler lid and opener (See S–46 FUEL-FILLER LID AND OPENER REMOVAL/INSTALLATION) (See S–46 FUEL-FILLER LID ADJUSTMENT)
17	Extractor chamber (See S–53 EXTRACTOR CHAMBER REMOVAL/INSTALLATION)

Rear

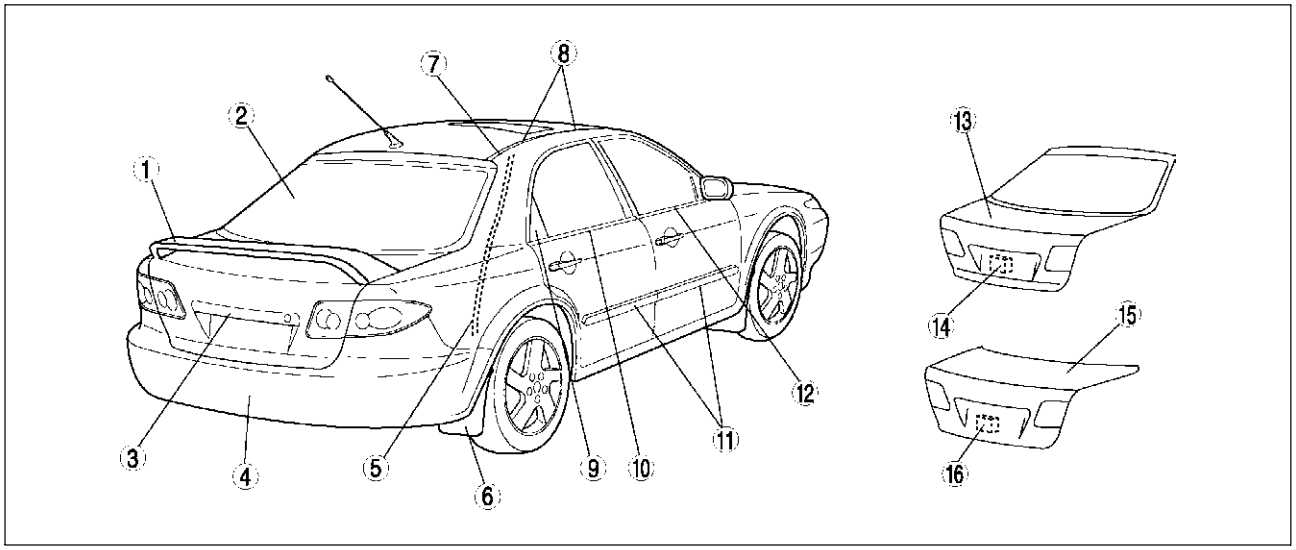

A6E7700W002

1	Rear spoiler (See S–54 REAR SPOILER REMOVAL/INSTALLATION)
2	Rear window glass (See S–68 REAR WINDOW GLASS REMOVAL) (See S–70 REAR WINDOW GLASS INSTALLATION) Filament (See S–63 FILAMENT REPAIR) (See S–63 FILAMENT INSPECTION)
3	Rear finisher (See S–54 REAR FINISHER REMOVAL/INSTALLATION)
4	Rear bumper (See S–49 REAR BUMPER REMOVAL/INSTALLATION)
5	Rear drain hose (See S–76 REAR DRAIN HOSE REMOVAL) (See S–76 REAR DRAIN HOSE INSTALLATION)
6	Rear flap (See S–51 REAR FLAP REMOVAL/INSTALLATION)
7	Roof molding (See S–57 ROOF MOLDING REMOVAL) (See S–57 ROOF MOLDING INSTALLATION)
8	Roof carrier bracket (See S–54 ROOF CARRIER BRACKET REMOVAL/INSTALLATION)
9	Rear door garnish (5HB) (See S–51 REAR DOOR GARNISH REMOVAL) (See S–52 REAR DOOR GARNISH INSTALLATION)
10	Rear beltline molding (See S–56 REAR BELTLINE MOLDING REMOVAL) (See S–56 REAR BELTLINE MOLDING INSTALLATION)

11	Side protector (See S–52 SIDE PROTECTOR REMOVAL) (See S–53 SIDE PROTECTOR INSTALLATION)
12	Front beltline molding (See S–55 FRONT BELTLINE MOLDING REMOVAL) (See S–55 FRONT BELTLINE MOLDING INSTALLATION)
13	Liftgate (See S–42 LIFTGATE REMOVAL/INSTALLATION) (See S–44 LIFTGATE DISASSEMBLY/ASSEMBLY) (See S–45 LIFTGATE ADJUSTMENT) Liftgate upper trim (See S–94 LIFTGATE UPPER TRIM REMOVAL/INSTALLATION) Liftgate side trim (See S–94 LIFTGATE SIDE TRIM REMOVAL/INSTALLATION) Liftgate lower trim (See S–95 LIFTGATE LOWER TRIM REMOVAL/INSTALLATION)
14	Liftgate lock actuator (See S–33 LIFTGATE LOCK ACTUATOR INSPECTION)
15	Trunk lid (See S–39 TRUNK LID REMOVAL/INSTALLATION) (See S–40 TRUNK LID DISASSEMBLY/ASSEMBLY) (See S–41 TRUNK LID ADJUSTMENT) Trunk lid trim (See S–93 TRUNK LID TRIM REMOVAL/INSTALLATION)
16	Trunk lid lock actuator (See S–32 TRUNK LID LOCK ACTUATOR INSPECTION)

S

INTERIOR

Front

A6E770001086W02

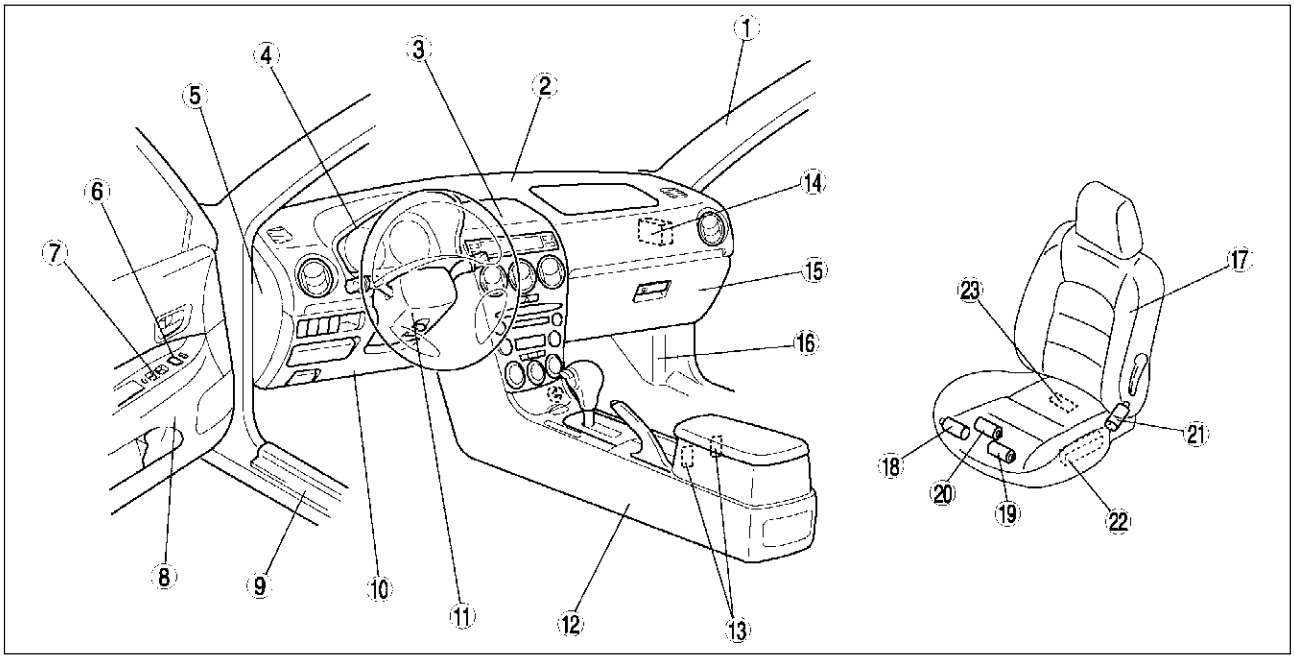

A6E7700W003

1	A-pillar trim (See S–87 A-PILLAR TRIM REMOVAL) (See S–87 A-PILLAR TRIM INSTALLATION)
2	Dashboard (See S–82 DASHBOARD REMOVAL/ INSTALLATION) (See S–83 DASHBOARD DISASSEMBLY/ ASSEMBLY)
3	Center box (See S–85 CENTER BOX REMOVAL/ INSTALLATION)
4	Meter hood (See S–84 METER HOOD REMOVAL/ INSTALLATION)
5	Side panel (See S–83 SIDE PANEL REMOVAL/ INSTALLATION)
6	Power outside mirror switch (See S–60 POWER OUTSIDE MIRROR SWITCH REMOVAL/INSTALLATION) (See S–60 POWER OUTSIDE MIRROR SWITCH INSPECTION)
7	Power window main switch (See S–25 POWER WINDOW SWITCH REMOVAL/ INSTALLATION) (See S–26 POWER WINDOW MAIN SWITCH INSPECTION) (See S–23 INITIAL SETTING) (See S–23 TWO-STEP DOWN FUNCTION OPERATIVE/NON-OPERATIVE SWITCHING PROCEDURE) (See S–24 DOOR GLASS POSITION CHANGE PROCEDURE)
8	Front door trim (See S–90 FRONT DOOR TRIM REMOVAL/ INSTALLATION)
9	Front scuff plate (See S–89 FRONT SCUFF PLATE REMOVAL/ INSTALLATION)

10	Lower panel (See S–84 LOWER PANEL REMOVAL/ INSTALLATION)
11	Column cover (See S–84 COLUMN COVER REMOVAL/ INSTALLATION)
12	Console (See S–86 CONSOLE REMOVAL/INSTALLATION) (See S–86 CONSOLE DISASSEmBLY/ ASSEMBLY)
13	Seat warmer switch (See S–117 SEAT WARMER SWITCH REMOVAL/ INSTALLATION) (See S–117 SEAT WARMER SWITCH INSPECTION)
14	Door lock timer unit (See S–33 DOOR LOCK TIMER UNIT REMOVAL/ INSTALLATION) (See S–34 DOOR LOCK TIMER UNIT INSPECTION) (See S–36 DOOR LOCK TIMER UNIT ID CODE CHANGE)
15	Glove compartment (See S–85 GLOVE COMPARTMENT REMOVAL/ INSTALLATION)
16	Front side trim (See S–88 FRONT SIDE TRIM REMOVAL/ INSTALLATION)
17	Front seat (See S–105 FRONT SEAT REMOVAL/ INSTALLATION) (See S–106 FRONT SEAT DISASSEMBLY/ ASSEMBLY)
18	Rear tilt motor (See S–116 REAR TILT MOTOR INSPECTION)
19	Front tilt motor (See S–116 FRONT TILT MOTOR INSPECTION)
20	Slide motor (See S–116 SLIDE MOTOR INSPECTION)

21	Recliner motor (See S–116 RECLINER MOTOR INSPECTION)
22	Power seat switch (See S–115 POWER SEAT SWITCH INSPECTION)

23	Seat warmer unit (See S–118 SEAT WARMER UNIT INSPECTION)

Rear

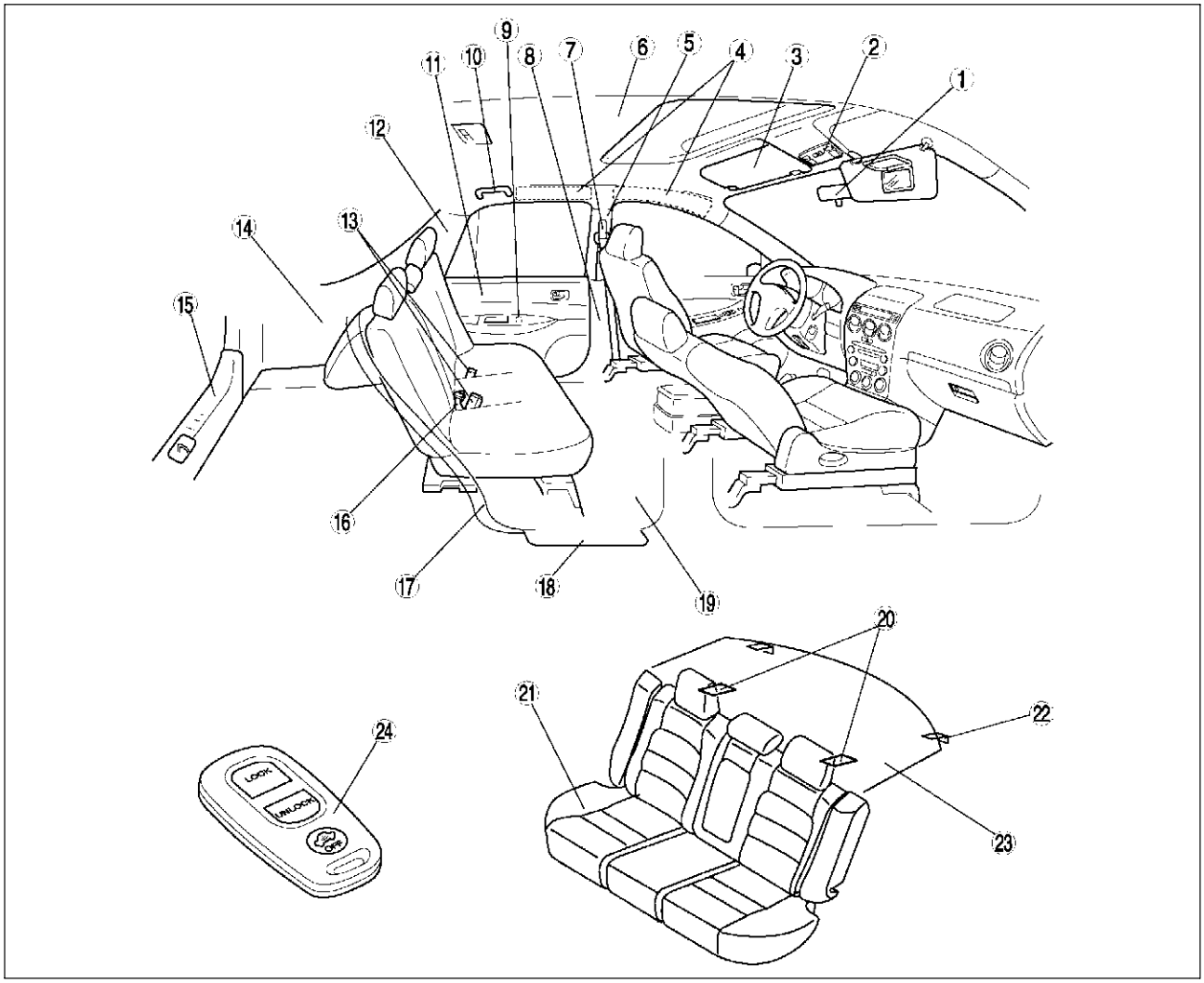

A6E7700W004

1	Rearview mirror (See S–61 REARVIEW MIRROR REMOVAL) (See S–61 REARVIEW MIRROR INSTALLATION) (See S–61 BASE REMOVAL) (See S–62 BASE INSTALLATION)
2	Sunroof switch (See S–81 SUNROOF SWITCH REMOVAL/ INSTALLATION) (See S–81 SUNROOF SWITCH INSPECTION)
3	Sunvisor (See S–98 SUNVISOR REMOVAL/ INSTALLATION)
4	Shock absorbing pad (See S–97 SHOCK ABSORBING PAD REMOVAL/ INSTALLATION)
5	B-pillar upper trim (See S–88 B-PILLAR UPPER TRIM REMOVAL/ INSTALLATION)

6	Headliner (See S–96 HEADLINER REMOVAL/ INSTALLATION)
7	Front seat belt (See S–100 FRONT SEAT BELT REMOVAL/ INSTALLATION) (See S–103 SEAT BELT INSPECTION)
8	B-pillar lower trim (See S–88 B-PILLAR LOWER TRIM REMOVAL/ INSTALLATION)
9	Power window subswitch (See S–25 POWER WINDOW SWITCH REMOVAL/ INSTALLATION) (See S–28 POWER WINDOW SUBSWITCH INSPECTION)
10	Assist handle (See S–97 ASSIST HANDLE REMOVAL/ INSTALLATION)

11	Rear door trim (See S–90 REAR DOOR TRIM REMOVAL/ INSTALLATION)
12	C-pillar trim (See S–89 C-PILLAR TRIM REMOVAL/ INSTALLATION)
13	Rear buckle (See S–102 REAR BUCKLE REMOVAL/ INSTALLATION)
14	Trunk side trim (See S–92 TRUNK SIDE TRIM REMOVAL/ INSTALLATION) Trunk side upper trim (See S–93 TRUNK SIDE UPPER TRIM REMOVAL/INSTALLATION)
15	Trunk end trim (See S–93 TRUNK END TRIM REMOVAL/ INSTALLATION)
16	Rear center seat belt (See S–101 REAR CENTER SEAT BELT REMOVAL/INSTALLATION) (See S–103 SEAT BELT INSPECTION)
17	Tire house trim (See S–91 TIRE HOUSE TRIM REMOVAL/ INSTALLATION)

18	Rear scuff plate (See S–89 REAR SCUFF PLATE REMOVAL/ INSTALLATION)
19	Front floor covering (See S–99 FRONT FLOOR COVERING REMOVAL/INSTALLATION)
20	Child restraint seat anchor (See S–104 CHILD RESTRAINT SEAT ANCHOR REMOVAL/INSTALLATION)
21	Rear seat (See S–110 REAR SEAT REMOVAL/ INSTALLATION) (See S–112 REAR SEAT DISASSEMBLY/ ASSEMBLY)
22	Remote handle lever (See S–114 REMOTE HANDLE LEVER REMOVAL/INSTALLATION)
23	Rear package trim (See S–92 REAR PACKAGE TRIM REMOVAL/ INSTALLATION)
24	Transmitter (See S–37 TRANSMITTER BATTERY REPLACEMENT) (See S–38 TRANSMITTER BATTERY INSPECTION)

DOOR

A6E770001086W03

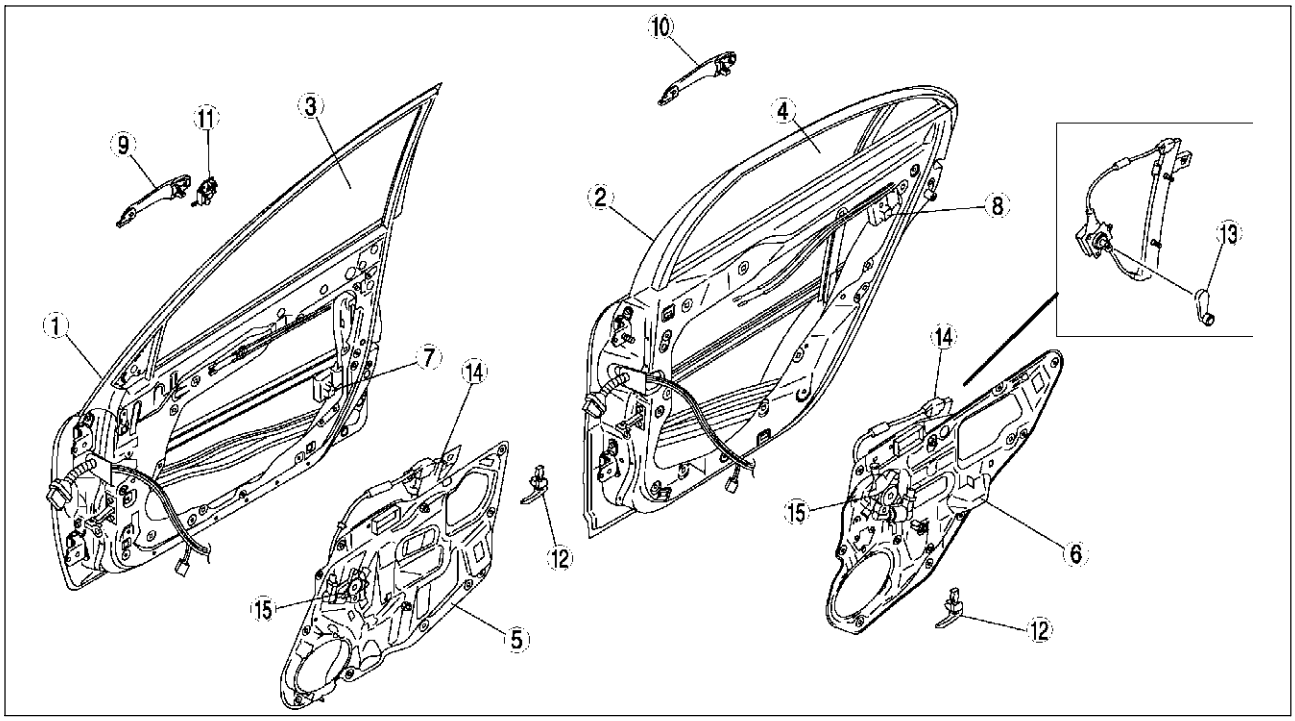

A6E7700WH01

1	Front door (See S–15 FRONT DOOR REMOVAL/ INSTALLATION) (See S–16 DOOR ADJUSTMENT)
2	Rear door (See S–15 REAR DOOR REMOVAL/ INSTALLATION) (See S–16 DOOR ADJUSTMENT)
3	Front door glass (See S–16 FRONT DOOR GLASS REMOVAL/ INSTALLATION)
4	Rear door glass (See S–17 REAR DOOR GLASS REMOVAL/ INSTALLATION)
5	Front door unit (See S–18 FRONT DOOR UNIT REMOVAL/ INSTALLATION)
6	Rear door unit (See S–18 REAR DOOR UNIT REMOVAL/ INSTALLATION)
7	Front door latch and lock actuator (See S–19 FRONT DOOR LATCH AND LOCK ACTUATOR REMOVAL/INSTALLATION) (See S–30 FRONT DOOR LOCK ACTUATOR INSPECTION)
8	Rear door latch and lock actuator (See S–19 REAR DOOR LATCH AND LOCK ACTUATOR REMOVAL/INSTALLATION) (See S–32 REAR DOOR LOCK ACTUATOR INSPECTION)

9	Front outer handle (See S–21 FRONT OUTER HANDLE REMOVAL/ INSTALLATION)
10	Rear outer handle (See S–21 FRONT OUTER HANDLE REMOVAL/ INSTALLATION)
11	Front door key cylinder (See S–20 FRONT DOOR KEY CYLINDER REMOVAL/INSTALLATION) (See S–30 FRONT DOOR LOCK ACTUATOR INSPECTION)
12	Inner handle (See S–22 INNER HANDLE REMOVAL/ INSTALLATION)
13	Regulator handle (See S–22 REGULATOR HANDLE REMOVAL) (See S–22 REGULATOR HANDLE INSTALLATION)
14	Power window regulator (See S–28 POWER WINDOW REGULATOR REMOVAL/installation)
15	Power window motor (See S–29 POWER WINDOW MOTOR REMOVAL/ INSTALLATION) (See S–29 POWER WINDOW MOTOR INSPECTION)

S

BONNET

BONNET REMOVAL/INSTALLATION

A6E771001084W01

Warning

- **Removing the bonnet without supporting can be dangerous. The bonnet may fall and injure you. Always perform the following procedure with at least another person.**

1. Disconnect the windshield washer hose.
2. To remove the bonnet hinge, remove the front fender panel.
3. To remove the bonnet lock, remove the radiator grille.
4. To remove the bonnet release cable, remove the driver-side mud guard.
5. Remove in the order indicated in the table.

1	Bonnet insulator
2	Shroud seal weatherstrip
3	Parting seal weatherstrip
4	Bonnet
5	Bonnet hinge
6	Bonnet stay
7	Bonnet switch connector (With theft-deterrent system)
8	Bonnet lock
9	Bonnet release lever
10	Bonnet release cable

6. Install in the reverse order of removal.
7. Adjust the bonnet. (See S–10 BONNET ADJUSTMENT.)

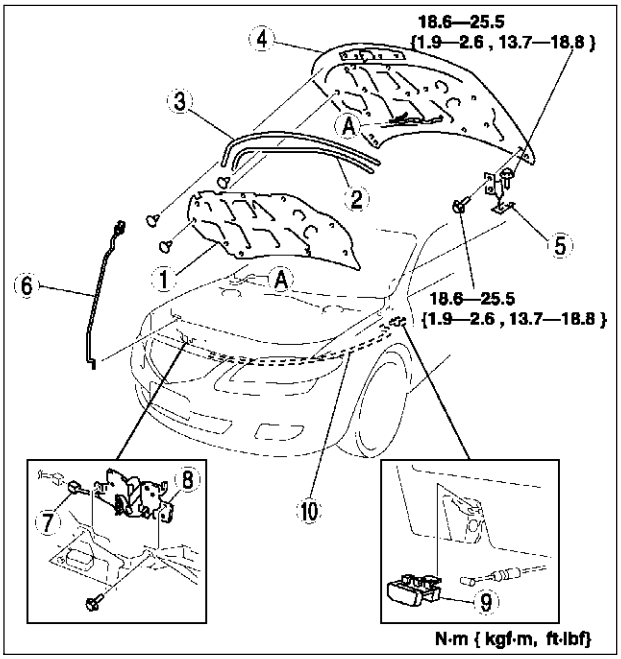

A6E7710W001

BONNET ADJUSTMENT

A6E771001084W02

Gap Adjustment

1. Remove the front fender.
2. Loosen the bonnet hinge installation bolts and reposition the bonnet.
3. Tighten the bolts.

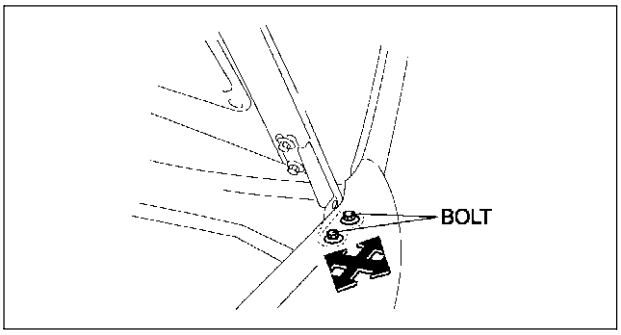

A6E7710W002

4. Verify that the gap between the bonnet and the body is within the specification.

Clearance
a: 2.5—4.5 mm {0.08—0.17 in}

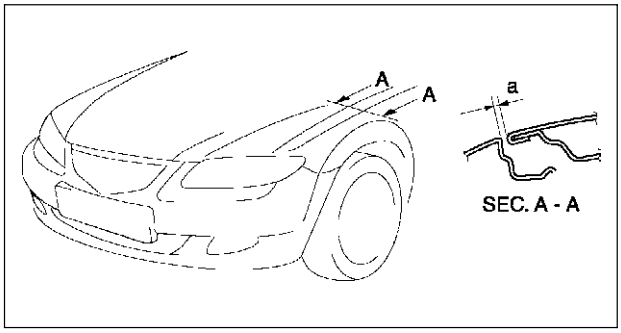

A6E7710W004

Height Adjustment

1. Turn the stop rubber to adjust the height of the bonnet.

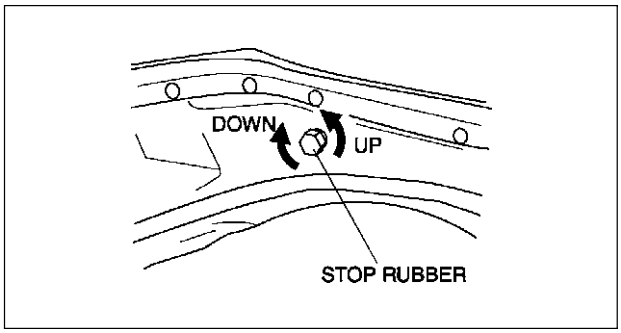

A6E7710W006

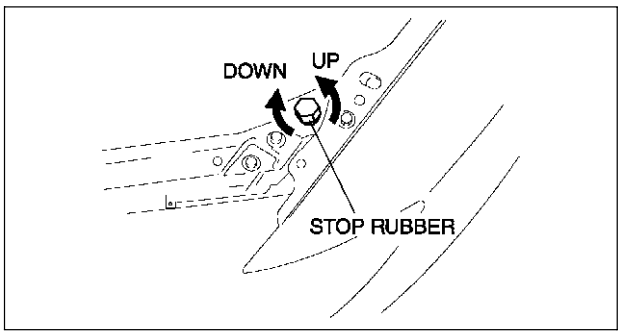

A6E7710W003

2. Verify that the height between the bonnet and the body is within the specification.

Clearance
a: 3.0—6.0 mm {0.12—0.23 in}
b: 3.0—6.0 mm {0.12—0.23 in}
c: -1.0—1.0 mm {-0.04—0.04 in}

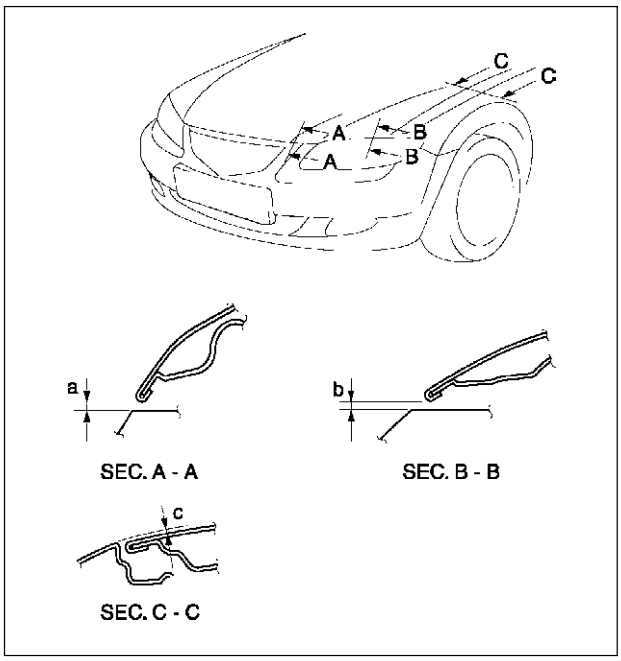

A6E7710W005

S

FRONT FENDER PANEL

FRONT FENDER PANEL REMOVAL/INSTALLATION

A6E771252110W01

1. Disconnect the negative battery cable.
2. Remove the front side turn light.
3. Remove the fender molding. (See S–50 COWL GRILLE REMOVAL/INSTALLATION.)
4. Remove the front bumper. (See S–47 FRONT BUMPER REMOVAL/INSTALLATION.)
5. Remove the front combination light. (See T–26 FRONT COMBINATION LIGHT REMOVAL/INSTALLATION.)
6. Remove in the order indicated in the table.

1	Front fender panel
2	Seal plate

7. Install in the reverse order of removal.

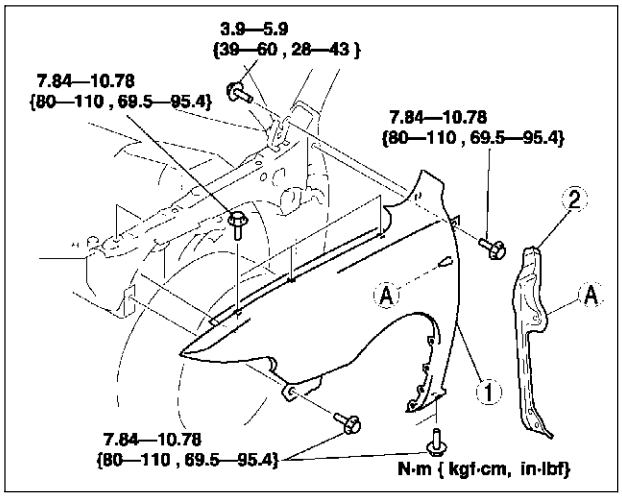

A6E7712W001

DOOR

FRONT DOOR STRUCTURAL VIEW

A6E771458010W01

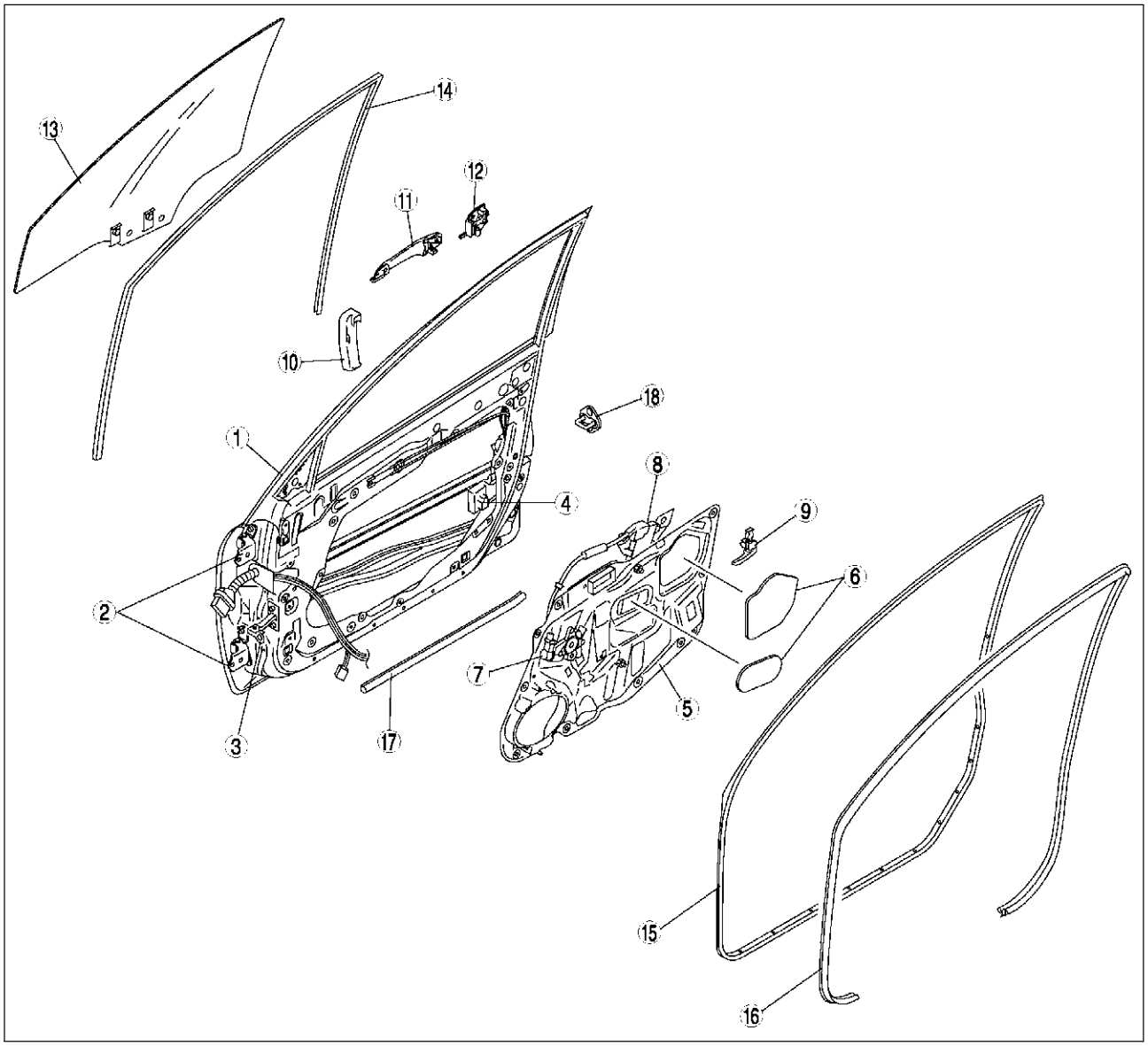

A6E7714W001

1	Front door
2	Front door hinge
3	Checker
4	Front door latch and lock actuator
5	Front door unit
6	Hole cover
7	Power window motor
8	Power window regulator
9	Inner handle

10	Protector
11	Outer handle
12	Front door key cylinder
13	Front door glass
14	Glass run channel
15	Front door weatherstrip A
16	Front door lower weatherstrip
17	Front door weatherstrip B
18	Striker

S

REAR DOOR STRUCTURAL VIEW

A6E771472010W01

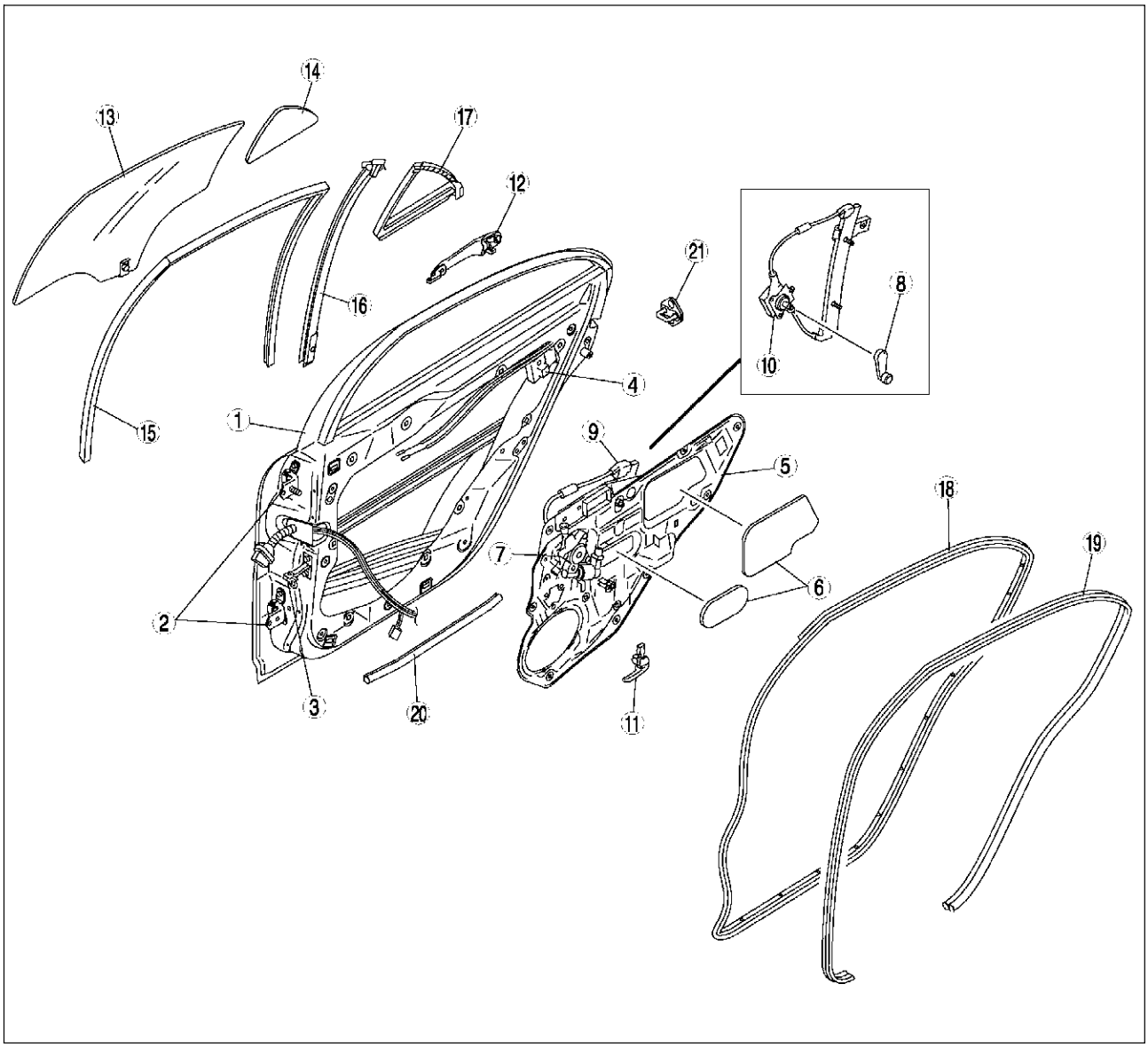

A6E7714W002

1	Rear door
2	Rear door hinge
3	Checker
4	Rear door latch and lock actuator
5	Rear door unit
6	Hole cover
7	Power window motor
8	Regulator handle
9	Power window regulator
10	Manual window regulator
11	Inner handle

12	Outer handle
13	Rear door glass
14	Quarter window glass
15	Glass run channel
16	Glass guide
17	Quarter window molding
18	Rear door weatherstrip A
19	Rear door lower weatherstrip
20	Rear door weatherstrip B
21	Striker

FRONT DOOR REMOVAL/INSTALLATION

A6E771458010W02

1. Disconnect the negative battery cable.
2. To remove the front door hinge, remove the front fender panel.
3. To remove the checker, remove the door speaker.
4. Remove in the order indicated in the table.

1	Connector (See S–15 Connector Removal Note)
2	Front door hinge
3	Front door
4	Checker

5. Install in the reverse order of removal.
6. Adjust the front door. (See S–16 DOOR ADJUSTMENT.)

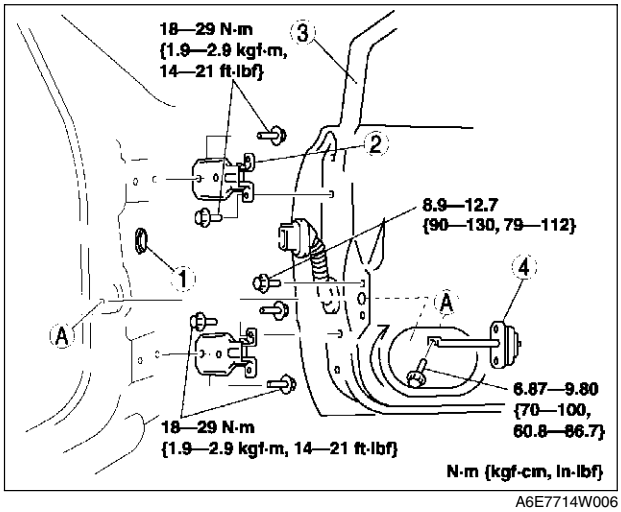

A6E7714W006

Connector Removal Note

1. Push the rubber boot backward.
2. Pull down the cover in the direction indicated by the arrow and disconnect the connector.

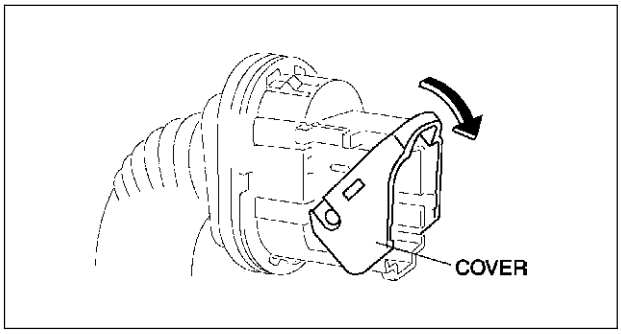

A6E7714W007

REAR DOOR REMOVAL/INSTALLATION

A6E771472010W02

Warning

- **Handling the side air bag sensor improperly can accidentally deploy the side air bag module, which may seriously injure you. Read AIR BAG SYSTEM SERVICE WARNINGS before working around the B-pillar areas. (See T–117 SERVICE WARNINGS.)**

Note

- The side air bag sensor is located in the B-pillar.

1. Disconnect the negative battery cable.
2. To remove the checker, turn the rear door speaker.
3. Remove in the order indicated in the table.

1	Connector
2	Rear door hinge
3	Rear door
4	Checker

4. Install in the reverse order of removal.
5. Adjust the rear door. (See S–16 DOOR ADJUSTMENT.)

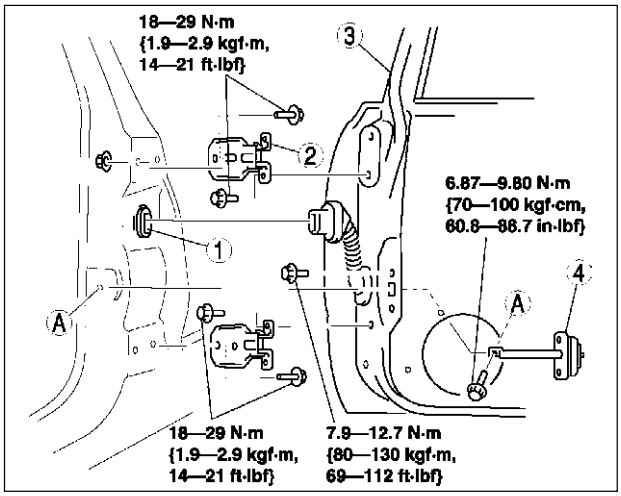

A6E7714W023

DOOR ADJUSTMENT

A6E771458010W03

1. Measure the gap and height between the front or rear door and the body.
2. If not as specified, loosen the front or rear door hinge installation bolts or the door lock striker installation screws, and reposition the door.

Clearance
a: 2.5—4.5 mm {0.10—0.18 in}
b: -0.8—1.2 mm {-0.03—0.05 in}
c: -0.3—1.7 mm {-0.01—0.07 in}
d: -1.0—1.0 mm {-0.04—0.04 in}
e: -0.5—1.5 mm {-0.02—0.06 in}

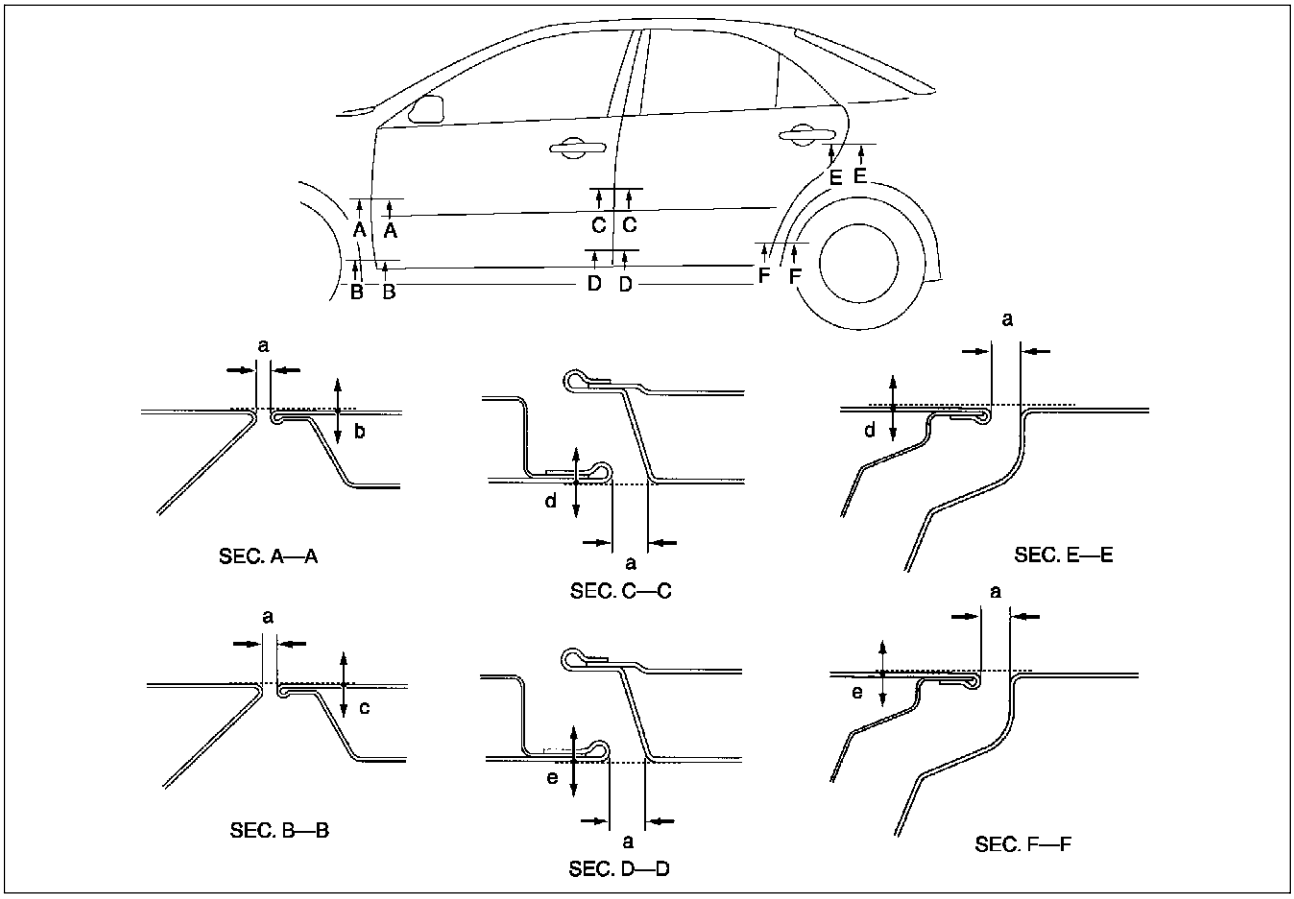

A6E7714W025

3. Tighten the bolts or screws.

FRONT DOOR GLASS REMOVAL/INSTALLATION

A6E771458510W01

1. Operate the front door glass so that the distance from the top of the front door glass to the upper part of the rear beltline molding is **210 mm {8.3 in}**.
2. Disconnect the negative battery cable.
3. Remove the front door trim.
4. Remove the hole cover.

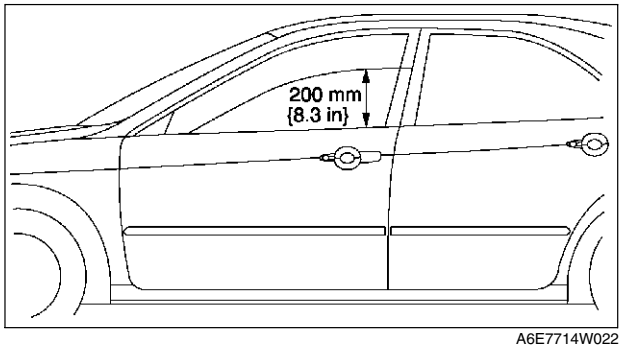

A6E7714W022

5. Remove the screws.
6. Insert your hand in hole of the front door unit, and lift out the front door glass.
7. Install in the reverse order of removal.

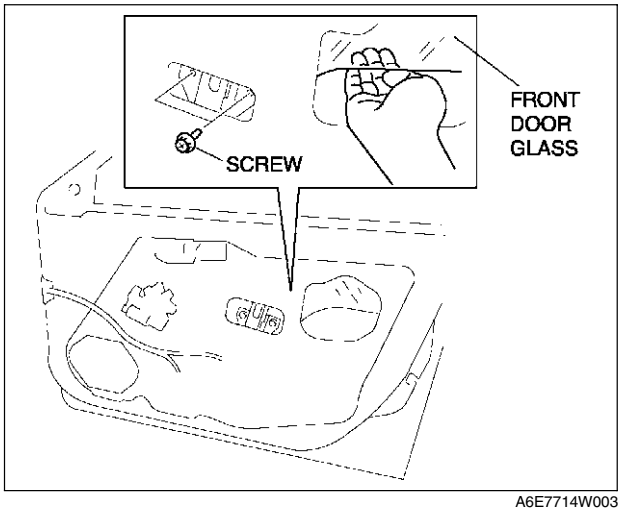

A6E7714W003

REAR DOOR GLASS REMOVAL/INSTALLATION

A6E771472510W01

1. Fully down the rear door glass.
2. Remove the rear door trim.
3. Remove the hole cover.
4. Pull up the rear door weatherstrip and remove the screw.
5. Remove the bolt.
6. Remove the glass run channel from the rear door glass guide.

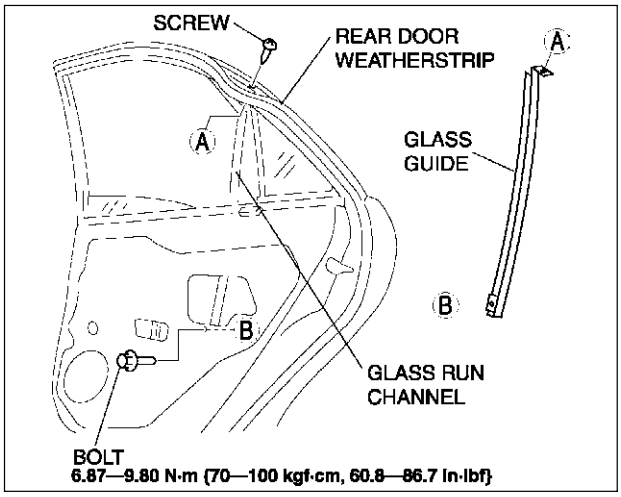

A6E7714W014

7. Lift the rear door glass to the position where the rear door glass installation screw is visible.
8. Remove the screw.
9. Insert your hand through the rear door unit hole and lift out the rear door glass.
10. Install in the reverse order of removal.

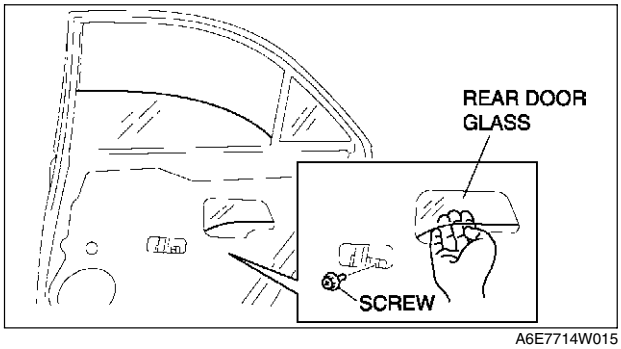

A6E7714W015

FRONT DOOR UNIT REMOVAL/INSTALLATION

A6E771458971W01

1. Remove the front door glass.
2. Remove the inner handle.
3. Remove the front door speaker.
4. Disconnect the power window motor connector, front door lock actuator connector, power outside mirror connector.
5. Remove the door harness from the front door unit.
6. Remove the bolts.
7. Remove the screw.
8. Remove the front door actuator hook from the front door unit.
9. Pull the front door unit slightly towards you, and while keeping the power window regulator from catching on the door, remove the door unit from the door.
10. Pull out the inner handle cable and door lock knob cable from the hole.

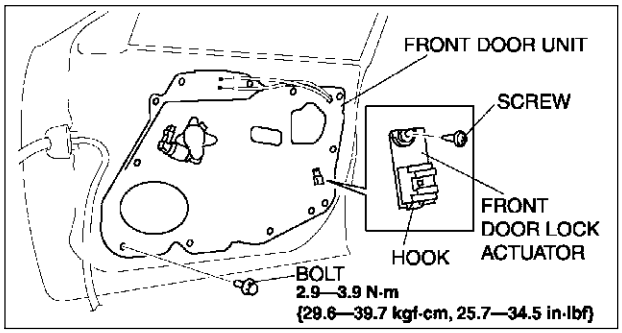

A6E7714W011

11. Remove the power window motor and power window regulator from the door unit.
12. Install in the reverse order of removal.

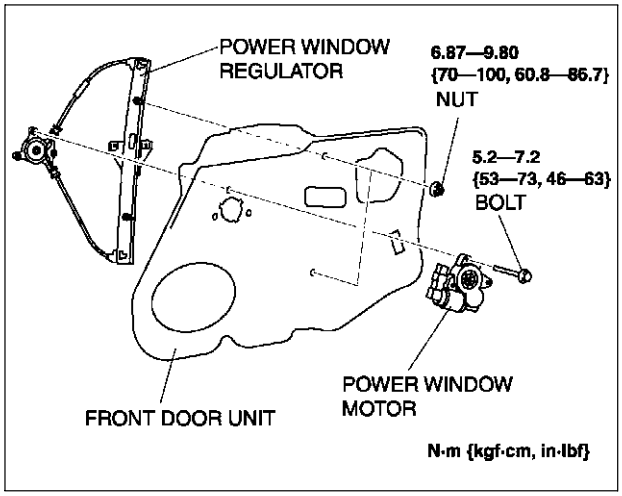

A6E7714W012

REAR DOOR UNIT REMOVAL/INSTALLATION

A6E771458971W02

1. Remove the rear door glass.
2. Remove the inner handle.
3. Remove the rear door speaker.
4. Disconnect the power window motor connector, and power door lock actuator connector.
5. Remove the rear door harness from the rear door unit.
6. Remove the bolts.
7. Remove the rear door lock actuator hook from the rear door unit.
8. Pull the rear door unit slightly towards you, and while keeping the power window regulator or manual window regulator from catching on the door, remove the door unit from the door.
9. Pull out the inner handle cable and door lock knob cable from the hole.

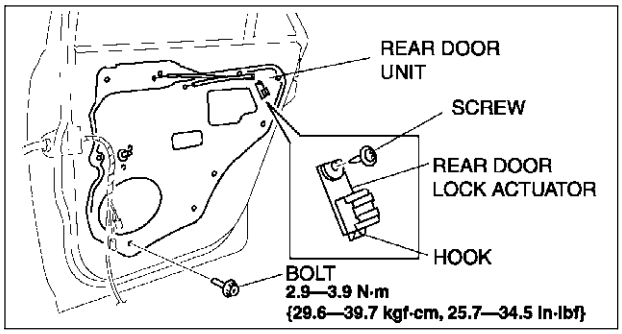

A6E7714W016

10. For power window system-equipped vehicles, remove the power window motor and power window regulator from the door unit. For manual window system-equipped vehicles, remove the regulator handle and manual window regulator.
11. Install in the reverse order of removal.

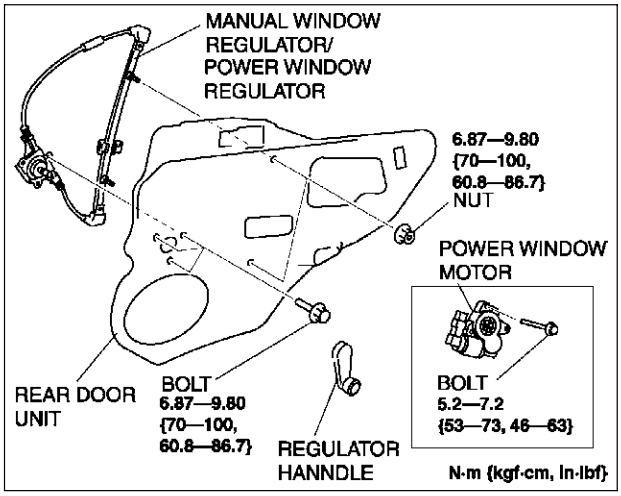

A6E7714W017

FRONT DOOR LATCH AND LOCK ACTUATOR REMOVAL/INSTALLATION

A6E771458310W01

1. Remove the front door unit.
2. Remove the screws, then remove the front door latch and door lock actuator.
3. Install in the reverse order of removal.

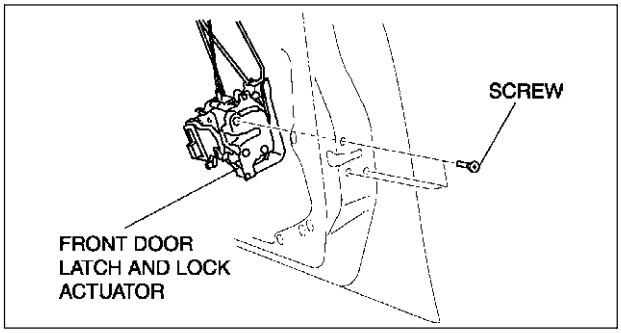

A6E7714W013

REAR DOOR LATCH AND LOCK ACTUATOR REMOVAL/INSTALLATION

A6E771472310W01

1. Remove the rear door unit.
2. Remove the screws, then remove the rear door latch and lock actuator.
3. Install in the reverse order of removal.

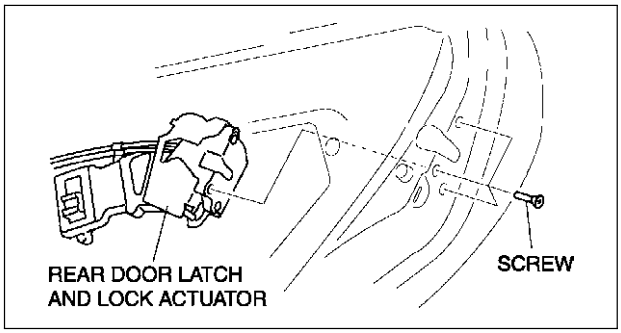

A6E7714W020

S

FRONT DOOR KEY CYLINDER REMOVAL/INSTALLATION

A6E771458310W03

1. Remove the front door unit.
2. Remove the cover, then remove the bolt.

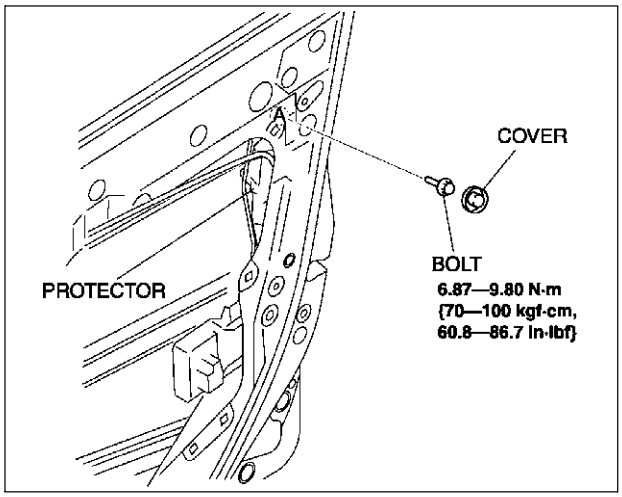

A6E7714W027

3. For protector-equipped vehicles, pull out the protector tab from the latch and remove the protector.
4. Disconnect the rod.
5. Remove the front outer handle.

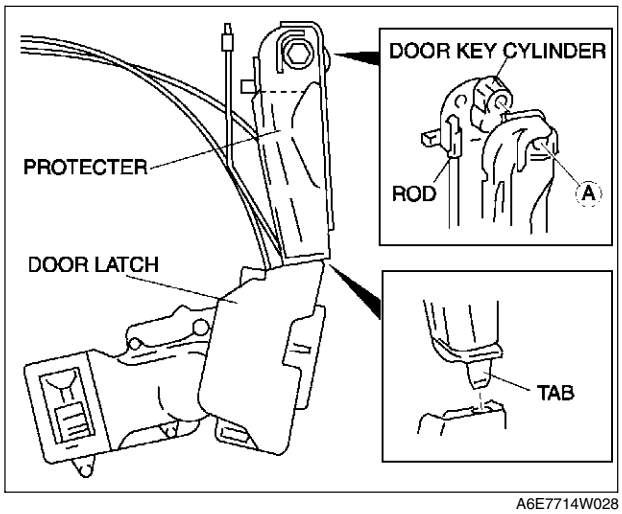

A6E7714W028

6. Turn the key cylinder in the direction indicated by the arrow (1) and move the hook to the notch.
7. Pull the key cylinder towards you (2) to remove it.
8. Install in the reverse order of removal.

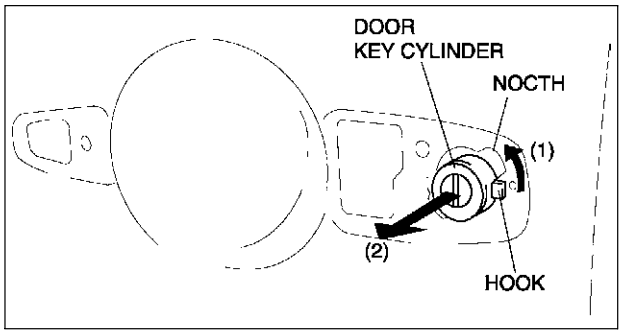

A6E7714W029

FRONT OUTER HANDLE REMOVAL/INSTALLATION

A6E771458410W01

1. Remove the front door glass.
2. Detach the outer handle and front door latch rod.
3. For protector-equipped vehicles, refer to key cylinder removal/installation to remove the protector.
4. Remove the bolts.

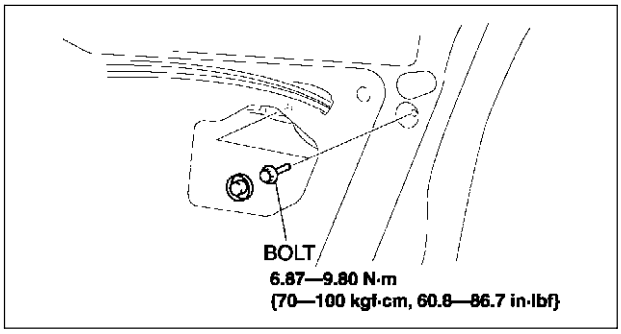

A6E7714W004

5. With the rear side of the outer handle fixed and the outer handle lever pulled out (1), remove the rear side of the outer handle from the front door.
6. Pull out the front side of the outer handle from the front door.
7. Install in the reverse order of removal.

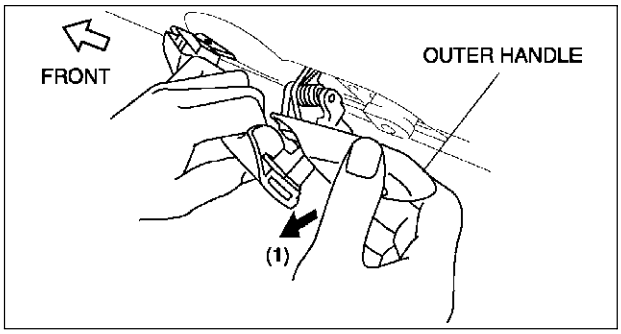

A6E7714W005

S

REAR OUTER HANDLE REMOVAL/INSTALLATION

A6E771458410W02

1. Remove the rear door glass.
2. Remove the rear door unit.
3. Remove the rear door latch.
4. Remove the bolts.
5. Detach the rear outer handle and rear door latch rod.

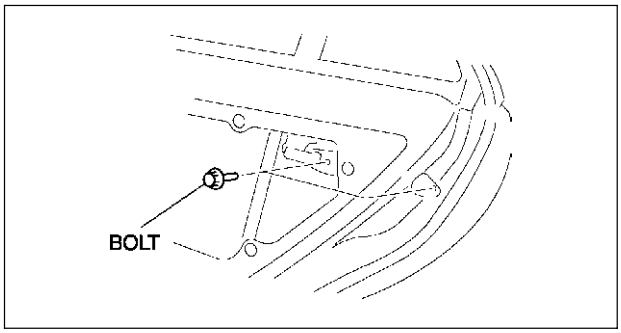

A6E7714W018

6. With the rear side of the rear outer handle fixed and the outer handle lever pulled out (1), remove the rear side of the rear outer handle from the rear door.
7. Pull out the front side of the rear outer handle from the rear door.
8. Install in the reverse order of removal.

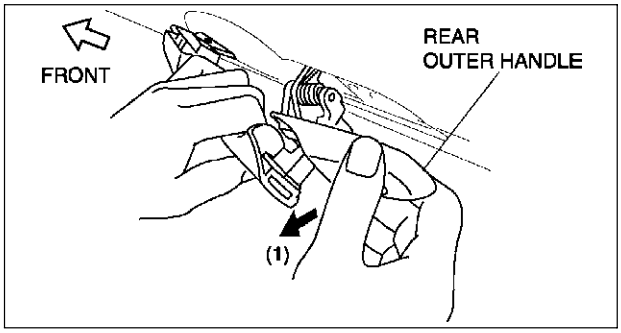

A6E7714W019

INNER HANDLE REMOVAL/INSTALLATION

1. Remove the front door trim.
2. Using a flathead screwdriver, press and hold the hook in the direction indicated by arrow (1), and pull the shaft in the direction indicated by arrow (2), remove the shaft.
3. Pull off the inner handle, and remove the door lock knob cable and inner handle cable.
4. Install in the reverse order of removal.

A6E771458330W01

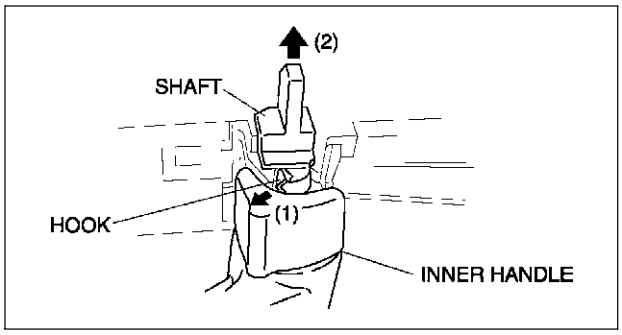

A6E7714W010

REGULATOR HANDLE REMOVAL

1. Remove the regulator handle clip using a rag as shown.

A6E771458580W01

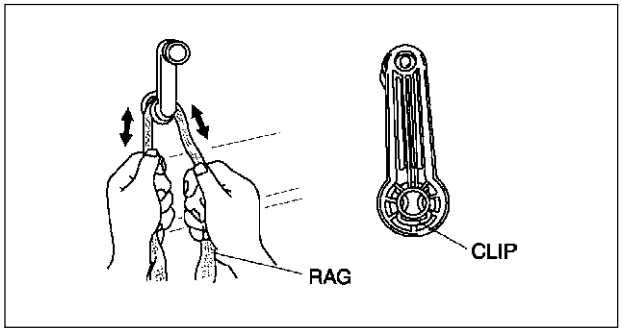

A6E7714W008

REGULATOR HANDLE INSTALLATION

1. Install the clip in the regulator handle.
2. Close the door glass fully and push the regulator handle on as shown.

A6E771458580W02

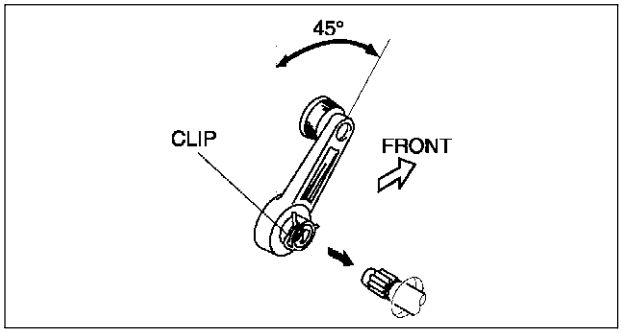

A6E7714W009

POWER WINDOW SYSTEM

INITIAL SETTING

A6E771666350W01

Note

- A driver side window will not fully close automatically under following the conditions:
  - — The battery has been disconnected during vehicle maintenance or for other reasons.
  - — The power window main switch connector, or driver-side power window motor connector has been disconnected.
- Carry out the following procedure to resume operation:

1. Turn the ignition switch to the ON position.
2. Press the driver side power window main switch and fully open the driver side window.
3. Pull up the driver side power window main switch to manual-up position to fully close the driver side window, and keep holding the switch up at the position for **about 2 seconds** to complete initial setting.

TWO-STEP DOWN FUNCTION OPERATIVE/NON-OPERATIVE SWITCHING PROCEDURE

A6E771666350W02

Note

- By following the procedure below, the two-step down function is switched to non-operative when it is operative, and to operative when it is non-operative.

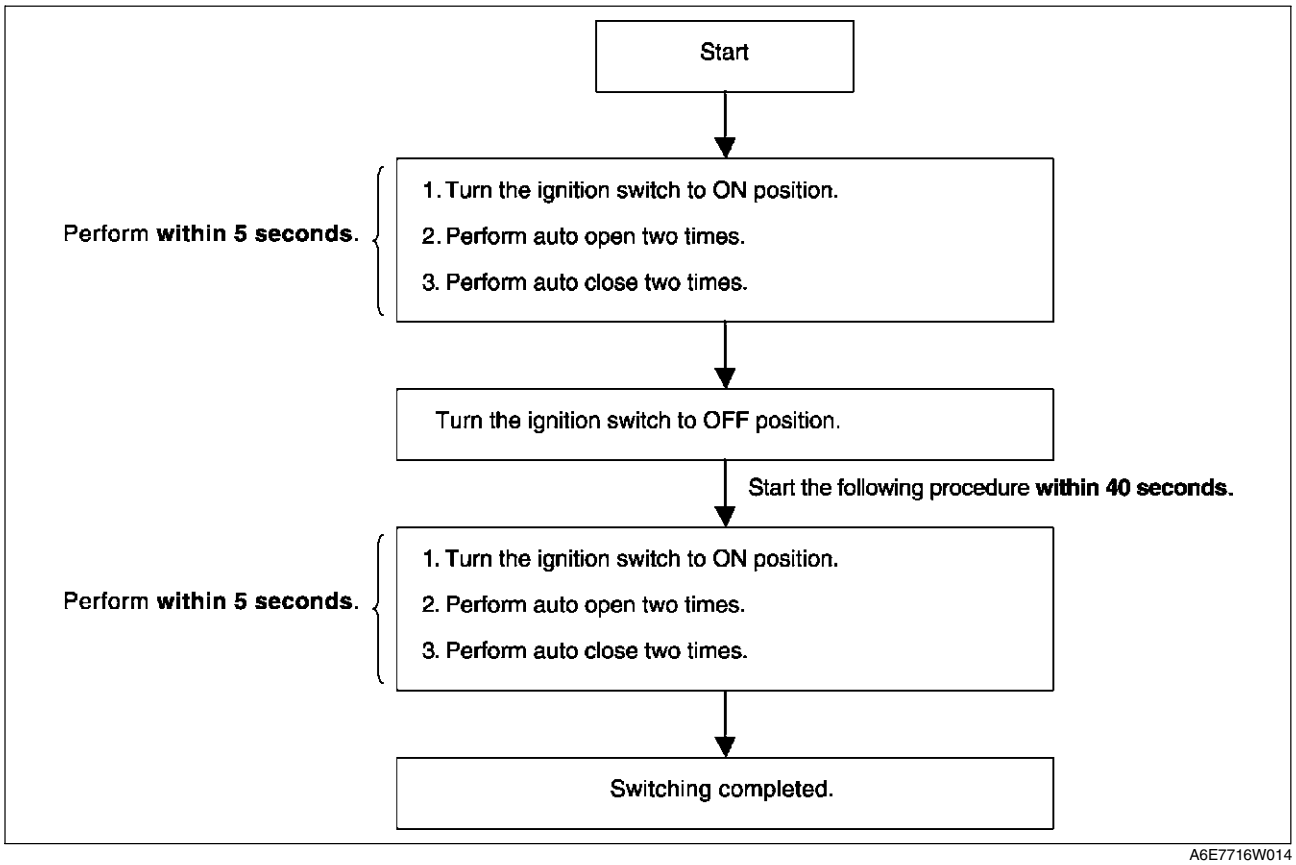

A6E7716W014

S

DOOR GLASS POSITION CHANGE PROCEDURE

A6E771666350W03

Note

- After performing the following procedure, verify that the two-step down function operates normally and the door glass position has changed. If the two-step down function does not operate or the door glass position has not changed, the procedure was not performed properly. Repeat the procedure from the beginning.

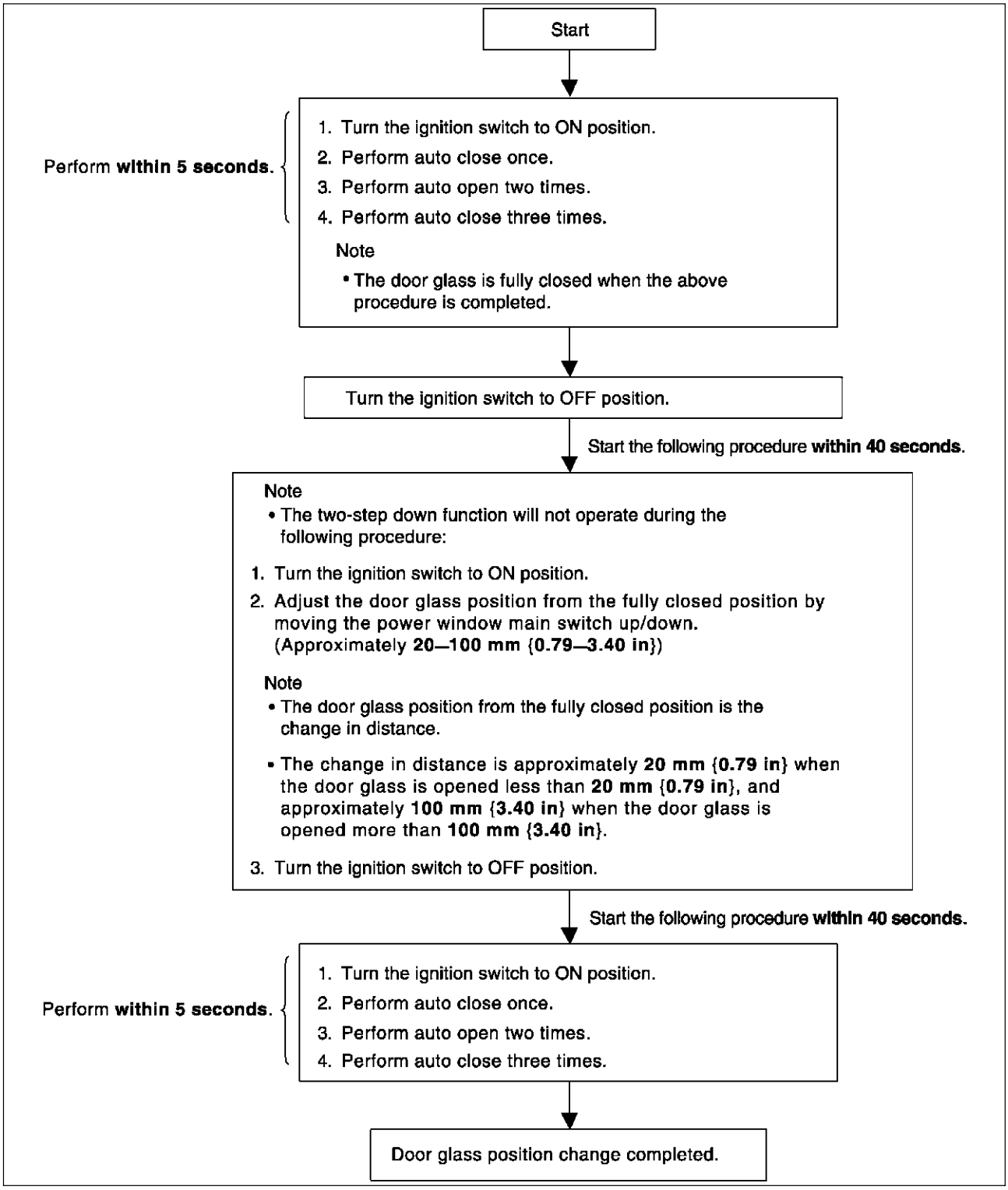

A6E7716W015

POWER WINDOW SWITCH REMOVAL/INSTALLATION

A6E771666350W04

1. Disconnect the negative battery cable.
2. Remove the front door trim or rear door trim.
3. Remove the screws, then the power window switch.
4. Install in the reverse order of removal.

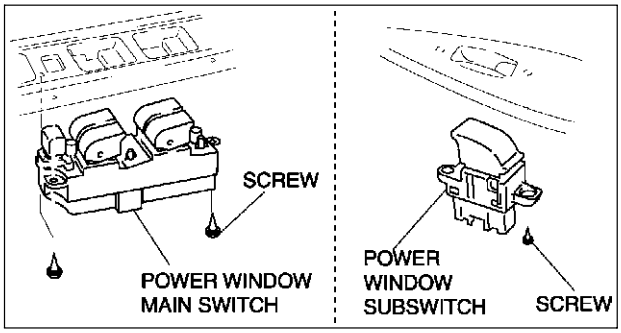

A6E7716W003

S

POWER WINDOW MAIN SWITCH INSPECTION

A6E771666350W05

Driver's side

1. Remove the driver-side front door trim.
2. Connect the power window main switch connector.
3. Measure the voltage at the power window main switch terminals as indicated below.
4. Disconnect the power window main switch connector before inspecting for continuity at terminals 1M (1J*2) and 1F (1L*2).
   - If not as specified, inspect the parts listed under "Action."
   - If the parts and wiring harnesses are okay but the system still does not work properly, replace the power window main switch.

Terminal voltage list (Reference)

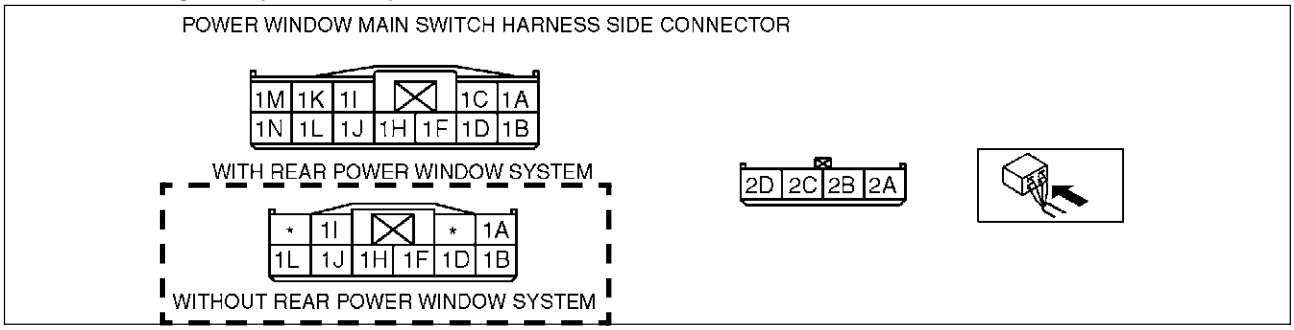

A6E7716W001

Terminal	Signal	Connected to	Test condition	Voltage (V)/ Continuity	Action
1N*1 1F*2 1B*3	Open output	Power window motor	While door glass is opening	B+	• Power window motor • Inspect related harness
			While door glass is closing	Below 1.0	
1L*1 1D	Close output	Power window motor	While door glass is opening	Below 1.0	• Power window motor • Inspect related harness
			While door glass is closing	B+	
1F 1L*2	Door switch	Door switch	Any door is open (door switch is on): inspect for continuity to ground	Yes	• Inspect door switch • Inspect related harness
			All doors are closed (door switch is off): inspect for continuity to ground	No	
1H 1B*2	IG1	P. WIND 30 A fuse	Ignition switch is at ON position	B+	• Inspect P. WIND 30 A fuse • Inspect related harness
			Ignition switch is at LOCK position	Below 1.0	
1J 1H*2	Power supply	P. WIND 20 A fuse	Under any condition	B+	• P. WIND 20 A fuse • Inspect related harness
1M 1J*2	Ground	GND	Under any condition: inspect for continuity to ground	Yes	• Inspect GND
2A	Ground	Power window motor	Under any condition: inspect for continuity to ground	Yes	• Power window motor • Inspect related harness
2B	Pulse 2	Power window motor	Door glass is in motion	Alternates between 0 and 5	• Power window motor • Inspect related harness
			Door glass is not in motion	0 or 5	
2C	Pulse 1	Power window motor	Door glass is in motion	Alternates between 0 and 5	• Power window motor • Inspect related harness
			Door glass is not in motion	0 or 5	
2D	Power supply	Power window motor	Under any condition	9	• Power window motor • Inspect related harness

*1 : With rear power window system (L.H.D.)
*2 : Without rear power window system (L.H.D.)
*3 : R.H.D.

Except driver's side

1. Turn the power-cut switch to UNLOCK.
2. Inspect for continuity between the power window main switch terminals using an ohmmeter.
   - If not as specified, replace the power window main switch.

PASSENGER'S SIDE

○—○ : Continuity

Switch position	Terminal			
	1H 1B*2	1M 1J*2	1D*1 1A*2 1L*3	1B*1 1I*2 1N*3
CLOSE	○	○	○	○
OFF		○	○	○
OPEN	○	○	○	○

*1: With rear power window system (L.H.D.)
*2: Without rear power window system (L.H.D.)
*3: R.H.D.

REAR RIGHT

○—○ : Continuity

Switch position	Terminal			
	1H	1M	1A	1C
CLOSE	○		○	
OFF	○	○	○	○
OPEN	○			○

REAR LEFT

○—○ : Continuity

Switch position	Terminal			
	1H	1M	1K	1I
CLOSE	○	○		○
OFF		○	○	○
OPEN	○	○		○

POWER-CUT SWITCH

○—○ : Continuity

Switch position	Terminal								
	1M 1J*2	1L*1 1D	1N*1 1F*2 1B*3	1D*1 1A*2 1L*3	1B*1 1I*2 1N*3	1A	1C	1K	1I
UNLOCK	○	○	○	○	○	○	○	○	○
LOCK	○	○	○	○	○	○	○	○	○

*1: With rear power window system (L.H.D.)
*2: Without rear power window system (L.H.D.)
*3: R.H.D.

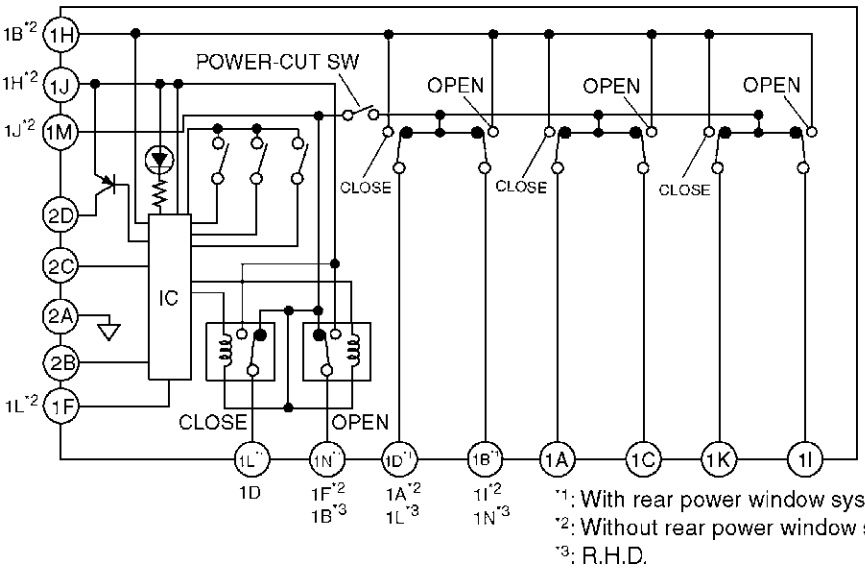

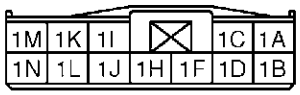

WITH REAR POWER WINDOW SYSTEM



WITHOUT REAR POWER WINDOW SYSTEM



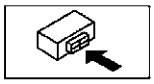

*1: With rear power window system (L.H.D.)
*2: Without rear power window system (L.H.D.)
*3: R.H.D.

A6E7716W009

S

POWER WINDOW SUBSWITCH INSPECTION

1. Inspect for continuity between the power window subswitch terminals.
   - If not as specified, replace the power window subswitch.

○—○ : Continuity

Switch position	Terminal A	B	C	E	F
CLOSE			○	○	
		○			○
OFF	○	○	○	○	
OPEN	○	○			
			○		○

A6E7716W013

A6E771666370W01

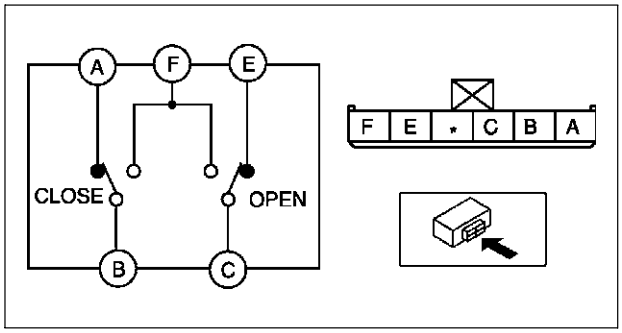

A6E7716W011

POWER WINDOW REGULATOR REMOVAL/INSTALLATION

A6E771658560W01

1. Disconnect the negative battery cable.
2. Remove the front door glass/rear door glass.
3. Remove the front door speaker/rear door speaker.
4. Remove the power window motor.
5. Remove the nuts.

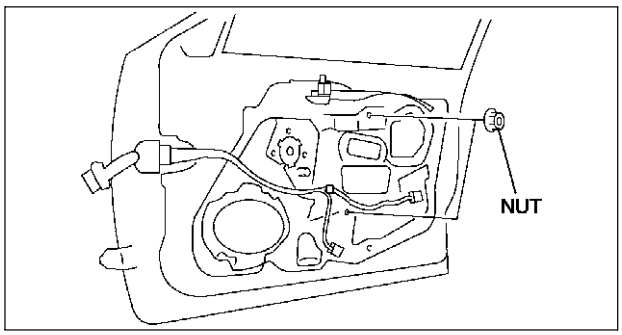

A6E7716W005

6. Insert hand through the speaker installation hole, rotate the regulator drum housing in the direction shown in the figure and disengage the regulator drum housing from the door unit connection hooks.

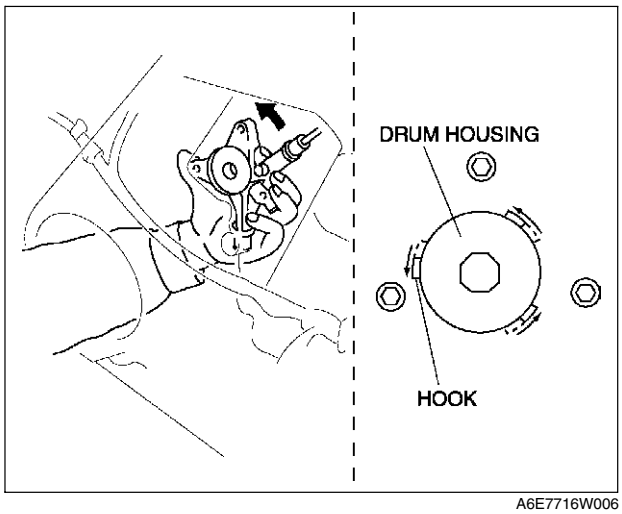

A6E7716W006

7. Remove the power window regulator from the speaker installation hole.
8. Install in the reverse order of removal.

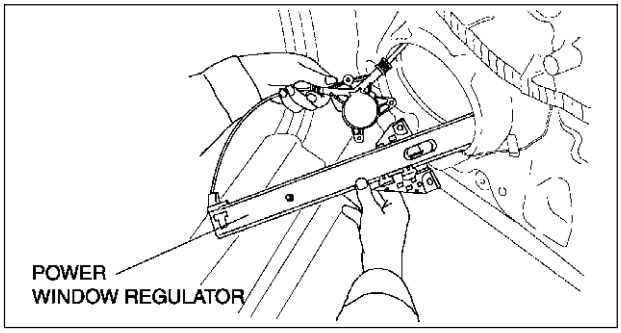

A6E7716W007

POWER WINDOW MOTOR REMOVAL/INSTALLATION

A6E771659560W01

1. Disconnect the negative battery cable.
2. Remove the front door trim or rear door trim.
3. Disconnect the power window motor connector.
4. Remove the bolts.
5. Remove the power window motor from the power window regulator drum.
6. Install in the reverse order of removal.

Note

- When installing the power window motor to the power window regulator drum, the drum housing hook may come off the door unit. If this happens, remove the door speaker, insert your hand in the speaker installation hole, connect the drum housing hooks, and while supporting the drum housing, install the power window motor to the drum.

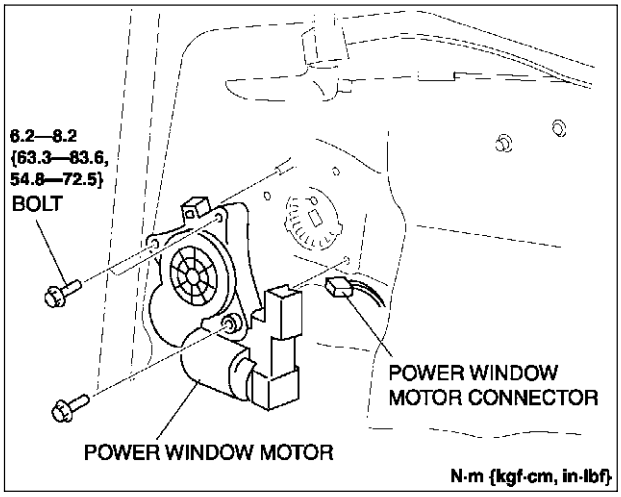

A6E7716W004

POWER WINDOW MOTOR INSPECTION

A6E771659560W02

Driver's Side

1. Disconnect the power window motor connector.
2. Apply battery positive voltage to the power window motor terminals E and F and inspect the operation the power window motor operation.
   - If not as specified, replace the power window motor.

Motor operation	Terminal	
	F	E
UP	GND	B+
DOWN	B+	GND

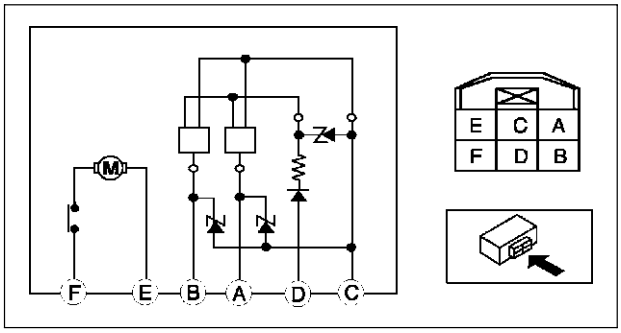

A6E7716W008

3. Apply **battery positive voltage** to the power window motor terminal D and connect terminal C to ground.
4. Measure the voltage at terminal B and A while performing Step 3.
   - If not as specified, replace the power window motor.

Voltage
Pulse wave: MAX. 5 V, MIN. 0 V

S

Except Driver's Side

1. Apply battery positive voltage to the power window motor terminals and inspect the operation of the power window motor.
   - If not as specified, replace the power window motor.

Motor operation	Terminal	
	F	E
UP	GND	B+
DOWN	B+	GND

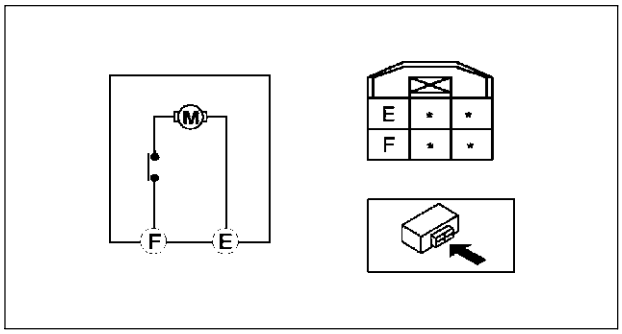

A6E7716W010

POWER DOOR LOCK SYSTEM

FRONT DOOR LOCK ACTUATOR INSPECTION

A6E771858310W01

Door Lock Actuator

1. Disconnect the front door lock actuator connector.
2. Apply battery positive voltage to the front door lock actuator terminals and inspect the operation of the front door lock actuator.
   - If not as specified, replace the front door lock actuator.

With double locking system

Actuator operation	Connection	
	B+	GND
Lock	A (F)	C (D)
Double lock	A (F)	B (E)
Unlock	C and B (D and E)	A (F)

( ) : RH

Without double locking system

Actuator operation	Connection	
	B+	GND
Lock	A (F)	B (E)
Unlock	A (F)	B (E)

( ) : RH

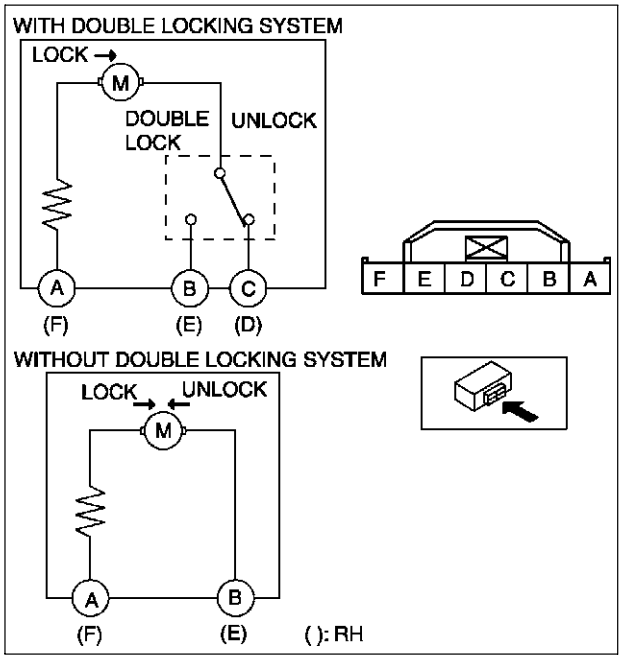

A6E7718W011

Door Lock-link Switch

1. Disconnect the front door lock actuator connector.
2. Inspect for continuity between the door lock-link switch terminals using an ohmmeter.
   - If not as specified, replace the front door lock actuator.

○—○ : Continuity

Lock knob position	Terminal		
	E (B)	F (A)	D (C)
Lock		○	○
Unlock	○	○	

( ): RH

A6E7718W012

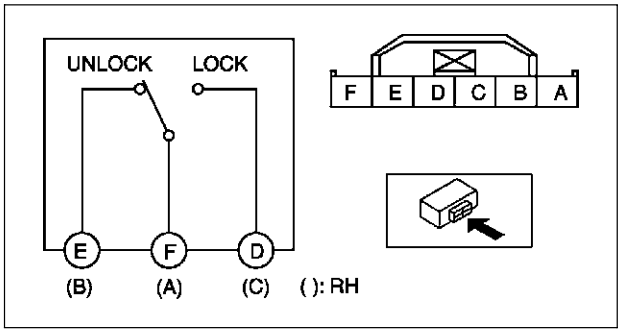

A6E7718W008

Door Key Cylinder Switch

1. Disconnect the front door lock actuator connector.
2. Inspect for continuity between the door lock-link switch terminals using an ohmmeter.
   - If not as specified, replace the front door lock actuator.

WITH DOUBLE LOCKING SYSTEM

○—○ : Continuity ○WW○ : Resistance

Key cylinder position	Terminal		
	A		B
Neutral			
Lock	○	WW ○	R
Unlock	○		○

R: 950—1050 Ω

WITHOUT DOUBLE LOCKING SYSTEM

○—○ : Continuity ○WW○ : Resistance

Key cylinder position	Terminal		
	C (A)		D (F)
Neutral			
Lock	○	WW ○	R
Unlock	○		○

( ): RH

R: 950—1050 Ω

A6E7718W022

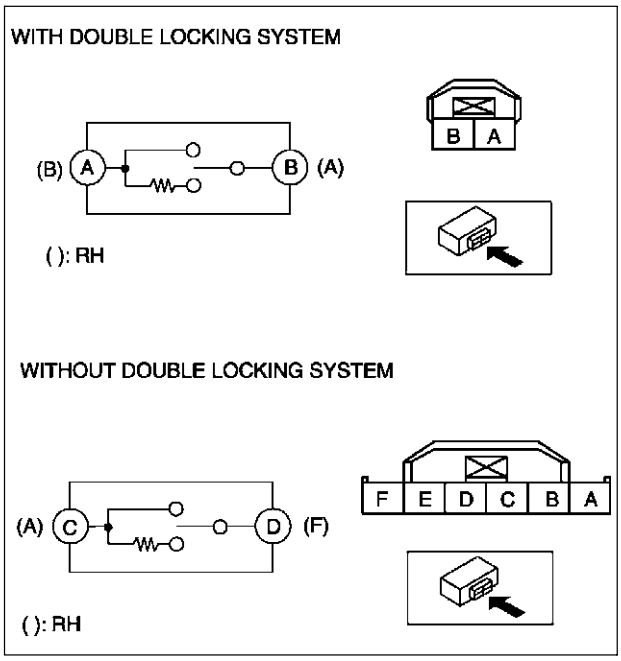

A6E7718W015

S

REAR DOOR LOCK ACTUATOR INSPECTION

A6E771872310W01

Door Lock Actuator

1. Disconnect the front door lock actuator connector.
2. Apply battery positive voltage to the front door lock actuator terminals and inspect the operation of the front door lock actuator.
   - If not as specified, replace the front door lock actuator.

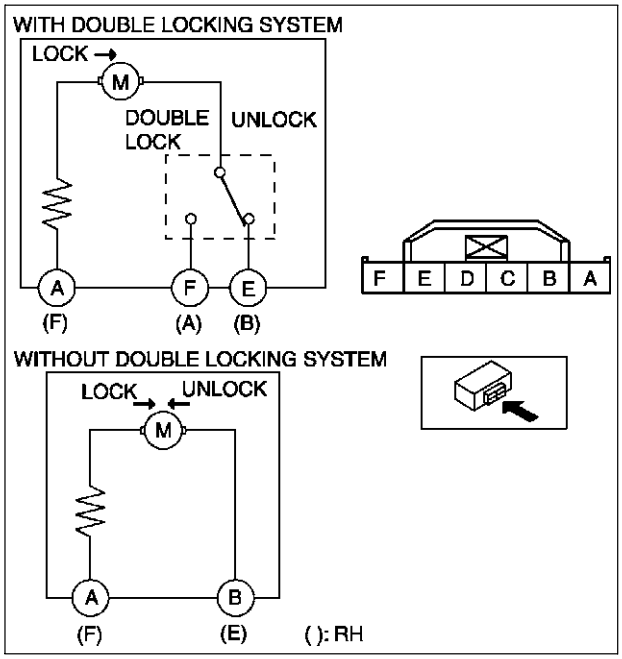

A6E7718W018

With double locking system

Connection		Actuator operation
B+	GND	
A (F)	F (A)	Lock
F (A)	A (F)	Double lock
F and E (A and B)	E (A)	Unlock

( ) : RH

Without double locking system

Actuator operation	Connection	
	B+	GND
Lock	A (F)	B (E)
Unlock	B (E)	A (F)

( ) : RH

Door Lock-link Switch (With Theft-deterrent System

1. Disconnect the front door lock actuator connector.
2. Inspect for continuity between the door lock-link switch terminals using an ohmmeter.
   - If not as specified, replace the front door lock actuator.

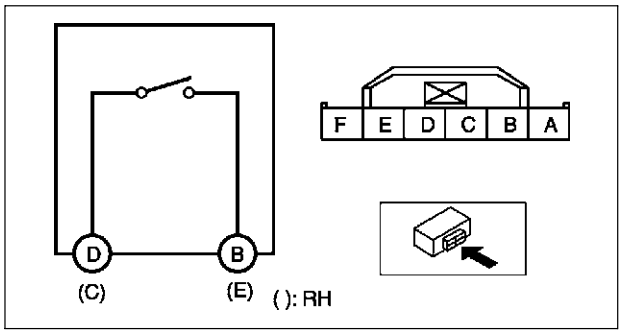

A6E7718W010

○—○ : Continuity

Lock knob position	Terminal	
	D (C)	B (E)
Lock		
Unlock	○	○

( ): RH

A6E7718W019

TRUNK LID LOCK ACTUATOR INSPECTION

A6E771856840W02

1. Disconnect the trunk lid lock actuator connector.
2. Apply battery positive voltage to the trunk lid lock actuator terminals and inspect the operation of the trunk lid lock actuator.
   - If not as specified, replace the trunk lid lock.

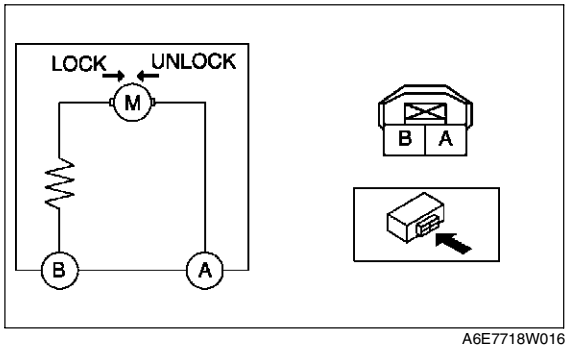

A6E7718W016

Actuator operation	Connection	
	B+	GND
Lock	A	B
Unlock	B	A

LIFTGATE LOCK ACTUATOR INSPECTION

A6E771862310W01

1. Disconnect the liftgate lock actuator connector.
2. Apply battery positive voltage to the liftgate lock actuator terminals and inspect the operation of the liftgate lock actuator.
   - If not as specified, replace the liftgate lock.

Actuator operation	Connection	
	B+	GND
Lock	A	B
Unlock	B	A

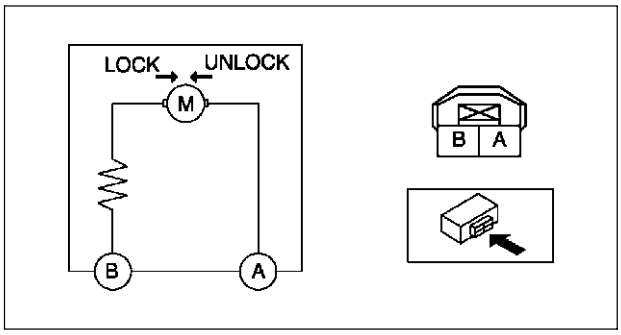

A6E7718W016

DOOR LOCK TIMER UNIT REMOVAL/INSTALLATION

A6E771867830W01

1. Disconnect the negative battery cable.
2. Remove the glove compartment. (L.H.D.)
3. Remove the bolt.
4. While inclining the door lock timer unit along the body panel in the direction indicated by the arrow, disengage the bracket hook from the hole in the body panel.
5. Disconnect the door lock timer unit connector.
6. Remove the door lock timer unit.

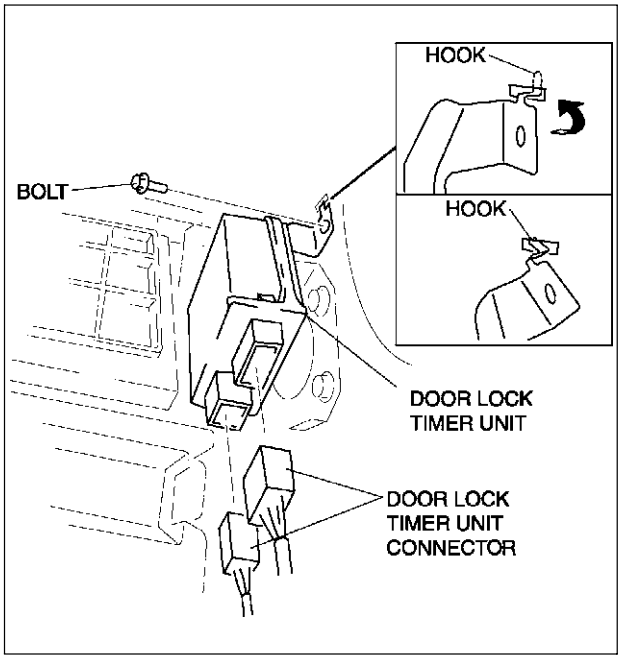

A6E7718W004

7. Remove the screw, then remove the bracket.

   Note
   - The screw which fixes the door lock timer unit and bracket is for a body ground connection. Be sure to secure the screw when installing.

8. Install in the reverse order of removal.

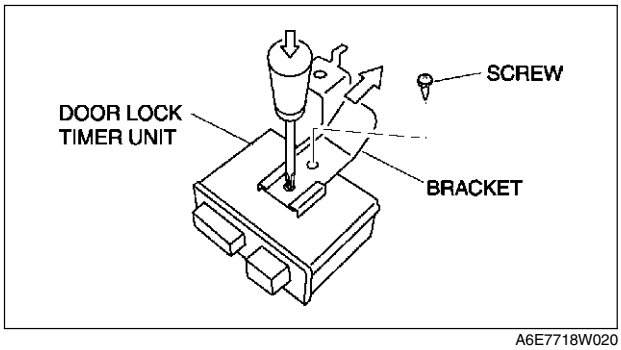

A6E7718W020

S

DOOR LOCK TIMER UNIT INSPECTION

A6E771867830W02

1. Measure the voltage at the door lock timer unit terminals (other than terminal 1E and 2W) as indicated below.
   - If not as specified, inspect the parts listed under “Action.”
2. Disconnect the negative battery cable.
3. Disconnect the door lock timer unit connector and inspect for continuity between terminal 1E or 2W and the bracket.
4. Inspect for continuity at terminal 1E and 2W as indicated below.
5. If the parts and wiring harnesses are okay but the system still does not work properly, perform the troubleshooting.

Terminal voltage list (Reference)

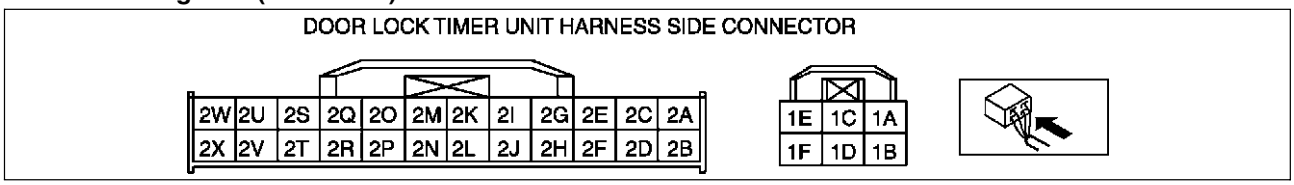

A6E7718W017

Terminal	Signal	Connected to	Test condition	Voltage (V)/ Continuity	Action
1A	Power supply	D. LOCK 30 A fuse	Under any condition	B+	• Inspect D. LOCK 30 A fuse • Inspect the vehicle battery • Inspect related harness
1B	Room light control	• Front map light • Rear map light • Courtesy light	Any door is open	Below 1.0	• Inspect ROOM 15 A fuse • Inspect door switch • Inspect front map light • Inspect rear map light • Inspect courtesy light • Inspect related harness
1C	Unlock output	• Door lock actuator • Trunk lid lock actuator (4SD) • Liftgate lock actuator (5HB)	While lock actuator is unlocking	Below 1.0→B+→Below 1.0	• Inspect door lock actuator • Inspect trunk lid lock actuator (4SD) • Inspect liftgate lock actuator (5HB) • Inspect D. LOCK 30 A fuse • Inspect related harness
			Other	Below 1.0	
1D	Lock output	• Door lock actuator • Trunk lid lock actuator (4SD) • Liftgate lock actuator (5HB)	While lock actuator is locking	Below 1.0→B+→Below 1.0	• Inspect door lock actuator • Inspect trunk lid lock actuator (4SD) • Inspect liftgate lock actuator (5HB) • Inspect D. LOCK 30 A fuse • Inspect related harness
			Other	Below 1.0	
1E	Power ground	GND	Under any condition: inspect for continuity to ground	Yes	• Inspect GND
1F*1	Double lock output	Door lock actuator	Door lock actuators are double locked	Below 1.0→B+→Below 1.0	• Inspect door lock actuator • Inspect related harness
			Other	Below 1.0	
2A	Power supply	METER IG 15 A fuse	Under any condition	B+	• Inspect METER IG 15 A fuse • Inspect related harness
2B	IG1	ROOM 15 A fuse	Ignition switch is at ON position	B+	• Inspect ROOM 15 A fuse • Inspect related harness
			Ignition switch is at LOCK or ACC position	Below 1.0	
2C	-	-	-	-	-

Terminal	Signal	Connected to	Test condition		Voltage (V)/ Continuity	Action
2D	-	-	-		-	-
2E	-	-	-		-	-
2F	Key reminder switch	Key reminder switch	Key reminder switch at on		B+	• Inspect key reminder switch • Inspect related harness
			Other		Below 1.0	
2G	Liftgate open/closed	Door switch	Lliftgate is open (cargo compartment light switch is on)		Below 1.0	• Inspect cargo compartment light switch • Inspect related harness
			Liftgate are closed (cargo compartment light switch are off)		B+	
2H	-	-	-		-	-
2I	Hazard	Flasher unit	Except vehicles with theft-deterrent system	Transmitter LOCK button is pressed	B+→Below 1.0→B+	• Inspect flasher unit • Inspect related harness
				Transmitter UNLOCK button is pressed	B+→Below 1.0→B+→Below 1.0→B+	
				No transmitter buttons are pressed	B+	
			Vehicles with theft-deterrent system	Under any condition	B+	• Inspect theft-deterrent control module • Inspect related harness
2J*1	Security light output	Instrument cluster	Double locking system operated		1.4	• Inspect instrument cluster • Inspect related harness
			Other		B+	
2K	Door open/ closed	Door switch	Any door is open (any door switch is on)		Below 1.0	• Inspect door switches • Inspect related harness
			All door are closed (door switches are off)		B+	
2L	-	-	-		-	-
2N	-	-	-		-	-
2M	-	-	-		-	-
2O	-	-	-		-	-
2P*2	Theft-deterrent alarm control	Theft-deterrent control module	Ignition switch is at ON position		B+→Below 1.0→B+	• Inspect theft-deterrent control module • Inspect related harness
			Other		B+	
2Q	Lock input	Door lock-link switch	Driver's side door is locked: inspect for continuity to ground		Yes	• Inspect door lock-link switch • Inspect related harness
			Driver's side door is unlocked: inspect for continuity to ground		No	
2R	Unlock input	Door lock-link switch	Driver's side door is locked: inspect for continuity to ground		No	• Inspect door lock-link switch • Inspect related harness
			Driver's side door is unlocked: inspect for continuity to ground		Yes	
2S	Lock/Unlock input	• Door key cylinder switch (driver's side)*1 • Door key cylinder switch (passenger's side)	At the moment of key cylinder is locked		Approx. 2.5	• Inspect key cylinder switch • Inspect related harness
			At the moment of key cylinder is unlocked		Below 1.0	
			Key cylinder at neutral position		Approx. 5	
2T	-	-	-		-	-
2U	-	-	-		-	-
2V	-	-	-		-	-
2W	Signal ground	GND	Under any condition: inspect for continuity to ground		Yes	• Inspect GND
2X	-	-	-		-	-

*1 : Vehicles with double locking system
*2 : Vehicles with theft-deterrent system

S

DOOR LOCK TIMER UNIT ID CODE CHANGE

A6E771801097W01

Note

- When programming the ID code into a door lock timer unit, verify that other transmitters are not being operated in the vicinity.

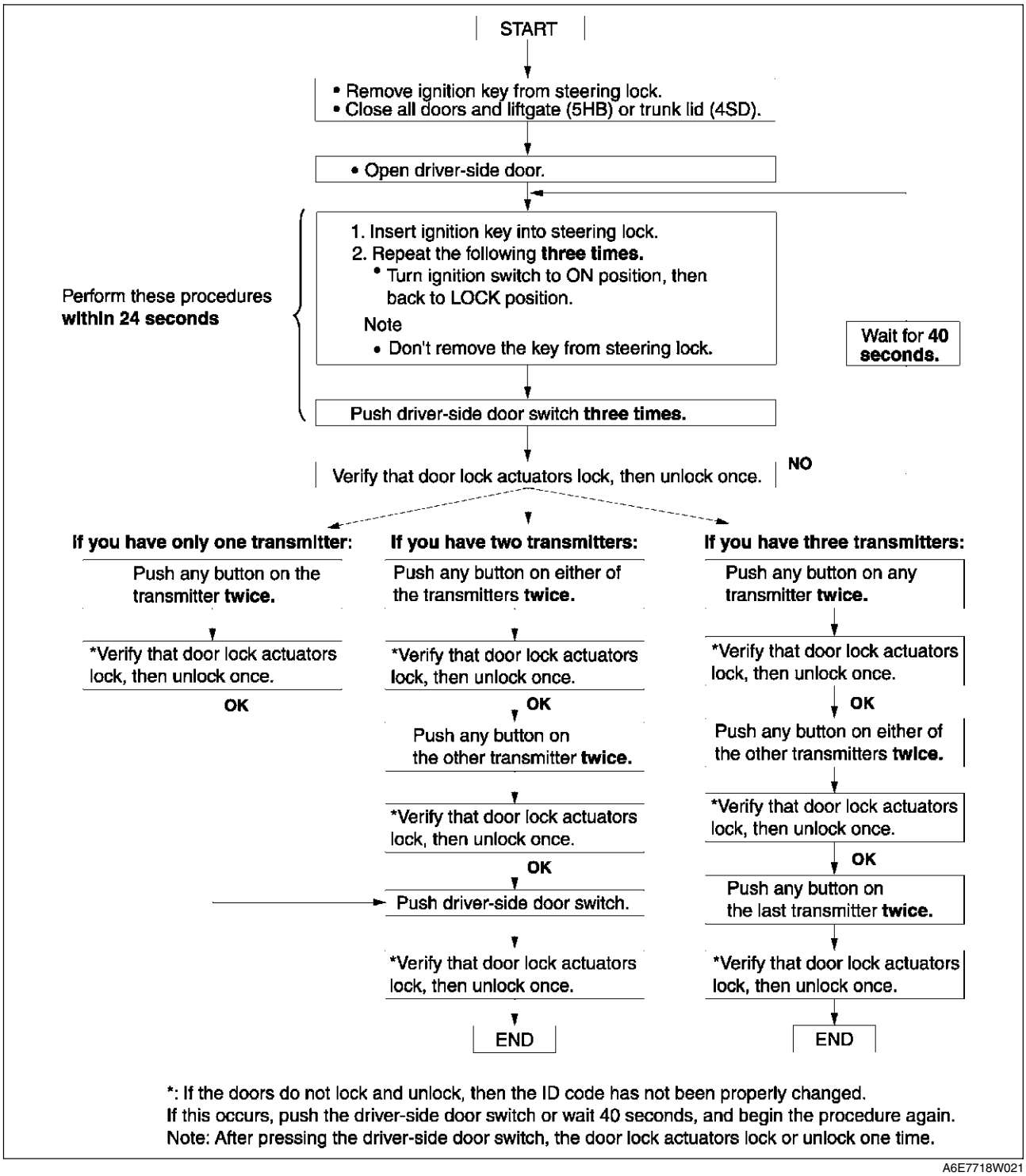

A6E7718W021

TRANSMITTER BATTERY REPLACEMENT

1. Insert a small screwdriver into the slot and gently pry open the transmitter.

A6E771800110W01

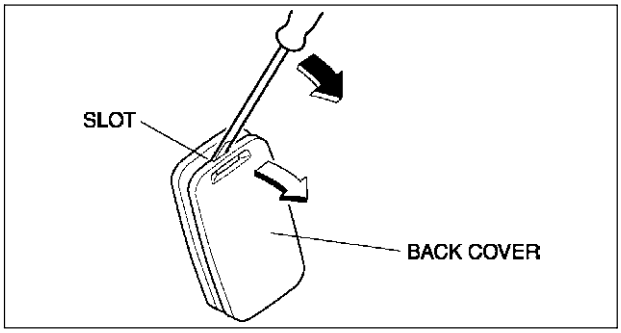

A6E7718W001

2. Press the portion of the battery indicated by A and remove the battery.
3. Install a new battery (CR2025) into the front portion of the holder with the positive pole (+) facing up. Press on the B portion of the battery to set the battery.

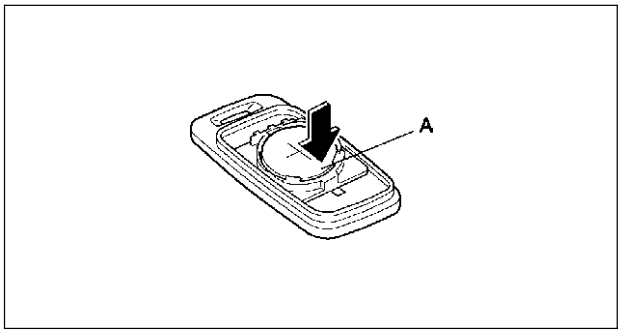

A6E7718W002

4. Align the front and back covers and snap the transmitter shut.

Battery specification
Lithium CR2025 × 1

Note
- The batteries will last about **2 years** when used **10 times** a day.

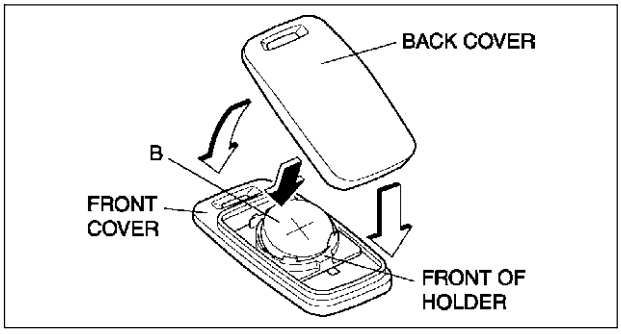

A6E7718W003

S

TRANSMITTER BATTERY INSPECTION

A6E771800110W02

Caution

- **Since the battery voltage does not drop fully if the button is pushed for only 4 seconds or less, it can not be properly examined to see whether it is good or bad. Always push the button for 5 seconds.**

Note

- A correct measurement can not be obtained if the battery temperature is low. Make sure the battery is at **18 °C {64 °F} or more** for **at least 30 minutes** before reinspecting if a measurement value is under the standard voltage.

1. Remove the transmitter cover.
2. Apply the circuit tester leads to the positions as indicated in the figure.

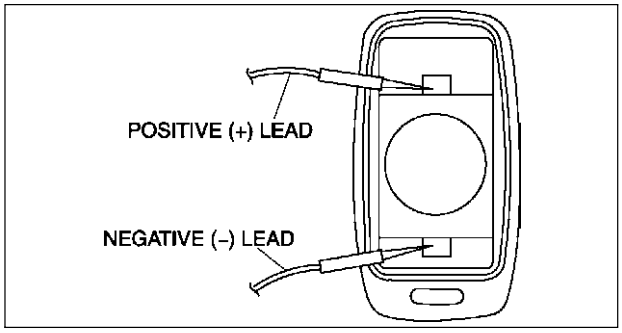

A6E7718W005

3. While pressing the battery as shown in the figure, press the LOCK and UNLOCK buttons on the transmitter at the same time to start measurement of the voltage.
4. Release the buttons after **5 seconds**.
5. Verify that the minimum voltage is the standard voltage or more for **10 seconds** after starting measurement.
   - If the voltage is under the standard voltage, replace the battery.

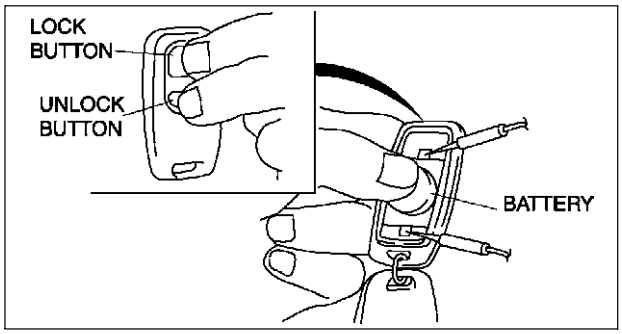

A6E7718W006

Standard voltage
2.7 V

TRUNK LID

TRUNK LID REMOVAL/INSTALLATION

A6E772052610W01

Warning

- **Removing the stay damper without supporting the trunk lid can be dangerous. The trunk lid may fall and injure you. Open the trunk lid fully and support it before removing the stay damper.**

1. Disconnect the negative battery cable.
2. Disconnect the trunk lid harness connector, pull the trunk lid harness out from the cabin.

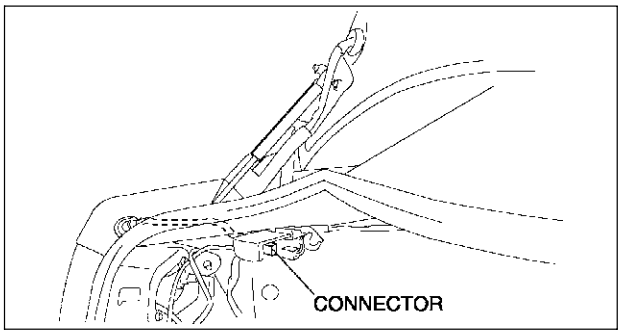

A6E7720W001

3. Disconnect the hooks, which secure the trunk lid harness to the trunk lid hinge.

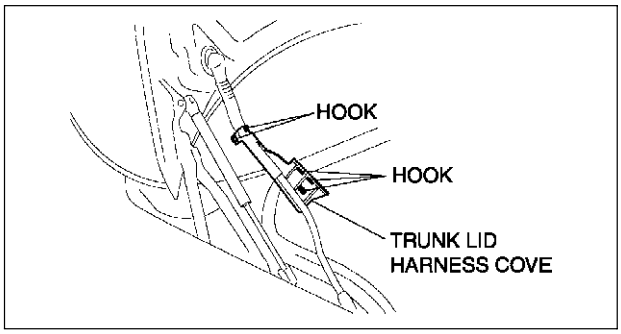

A6E7720W004

4. Pry away the stay damper's band with a screwdriver.
5. Pry out the connecting part of the stay damper and the hinge with a screwdriver to disconnect them. Then remove the stay damper.

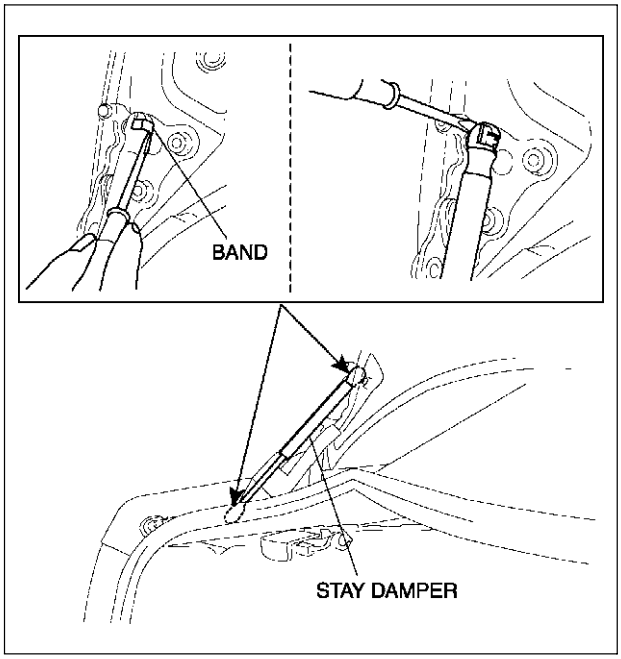

A6E7720W002

6. Remove the nuts, then remove the trunk lid.
7. Remove the bolts, then remove the trunk lid hinge.
8. Install in the reverse order of removal.
9. Adjust the trunk lid. (See S–41 TRUNK LID ADJUSTMENT.)

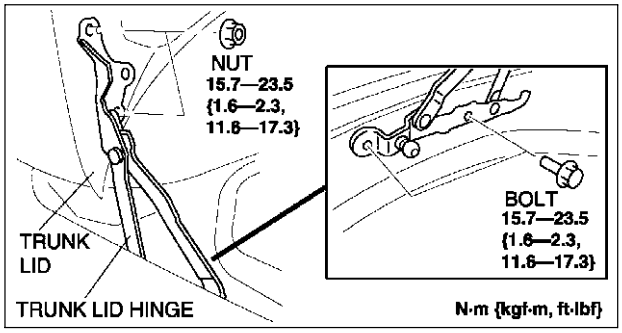

A6E7720W007

TRUNK LID DISASSEMBLY/ASSEMBLY

A6E772052610W02

1. Disconnect the negative battery cable.
2. Remove the trunk lid trim.
3. To remove the trunk lid outer handle and trunk lid key cylinder, remove the rear finisher.
4. Disassemble in the order indicated in the table.
5. Assemble in the reverse order of disassembly.

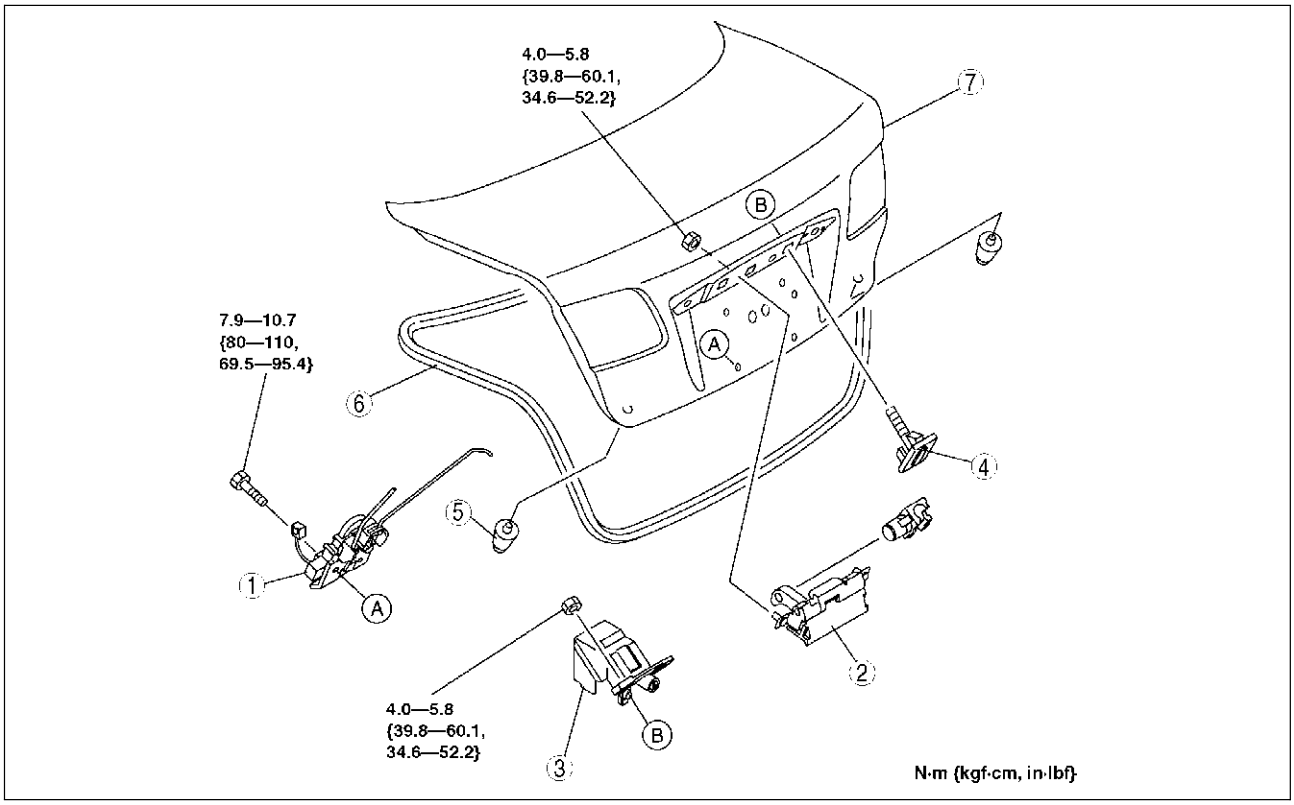

A6E7720W006

1	Trunk Lid latch and lock actuator
2	Trunk Lid outer handle
3	Trunk Lid key cylinder
4	Clip

5	Stopper
6	Trunk Lid weatherstrip
7	Trunk Lid

TRUNK LID ADJUSTMENT

A6E772052610W03

1. Measure the gap and height between the front door and the body.
2. If not as specified, loosen the door hinge installation bolts or the door lock striker installation screws, and reposition the door.

   Clearance
   a: 2.5—4.5 mm {0.10—0.18 in}
   b: -1.0—1.0 mm {-0.04—0.04 in}
   c: 4.0—8.0 mm {0.16—0.31 in}

3. Tighten the bolts or screws.

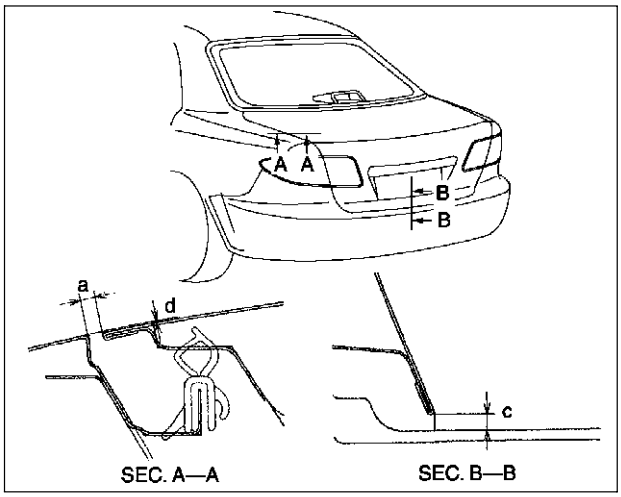

A6E7720W005

STAY DAMPER DISPOSAL

A6E772052610W04

Note
- The gas in the stay damper is colorless, odorless, and non-toxic.

1. Wear protective eye wear.
2. Lay the stay damper flat.
3. Saw through the stay damper body using a hacksaw.
4. Allow the gas to escape from the stay damper.
5. Discard the stay damper.

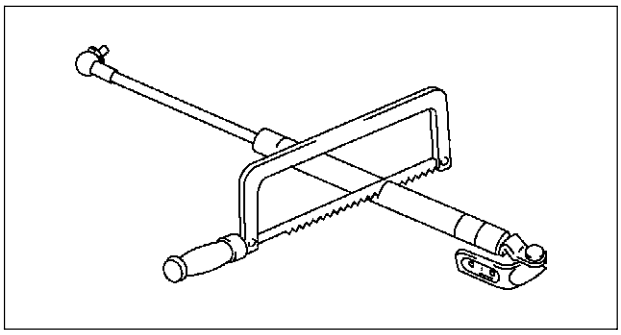

A6E7722W006

S

LIFTGATE

LIFTGATE REMOVAL/INSTALLATION

A6E772262010W01

Warning

- **Removing the stay damper without supporting the liftgate can be dangerous. The liftgate may fall and injure you. Open the liftgate fully and support it before removing the stay damper.**

1. Disconnect the negative battery cable.
2. Remove the liftgate lower upper trim.
3. Press the liftgate harness connector's bracket, which is attached to the liftgate, to the (1) direction shown in the figure, and then detach the fit. Then remove the connector toward the (2) direction shown in the figure.
4. Disconnect the vehicle harness connector and the liftgate connector. Then remove the grommet from the liftgate.

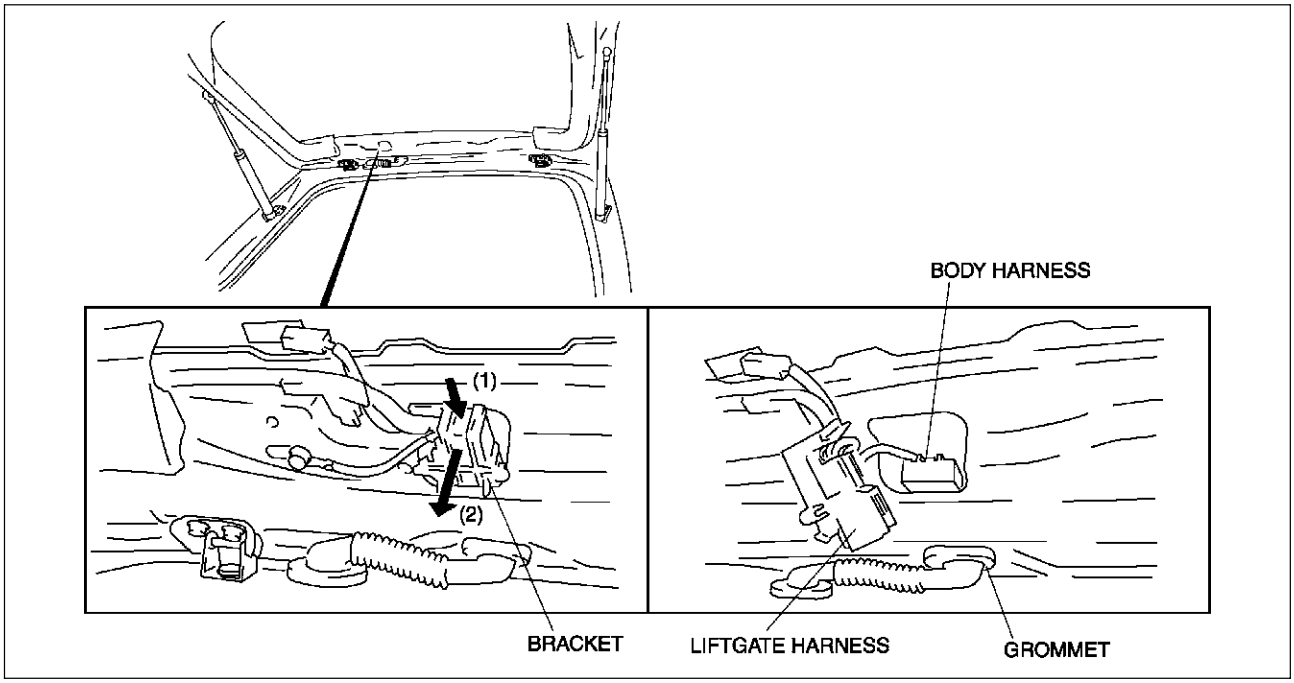

A6E7722W003

5. Pry away the stay damper's band with a screwdriver.
6. Pry out the connecting part of the stay damper and the hinge with a screwdriver to disconnect them. Then remove the stay damper.
7. Remove the bolts A, then remove the liftgate.
8. To remove the hinge, remove the headliner and the nut.

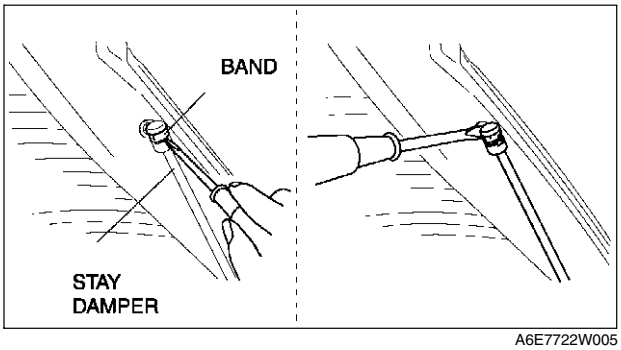

A6E7722W005

9. To remove the stay damper, remove the bolt B.

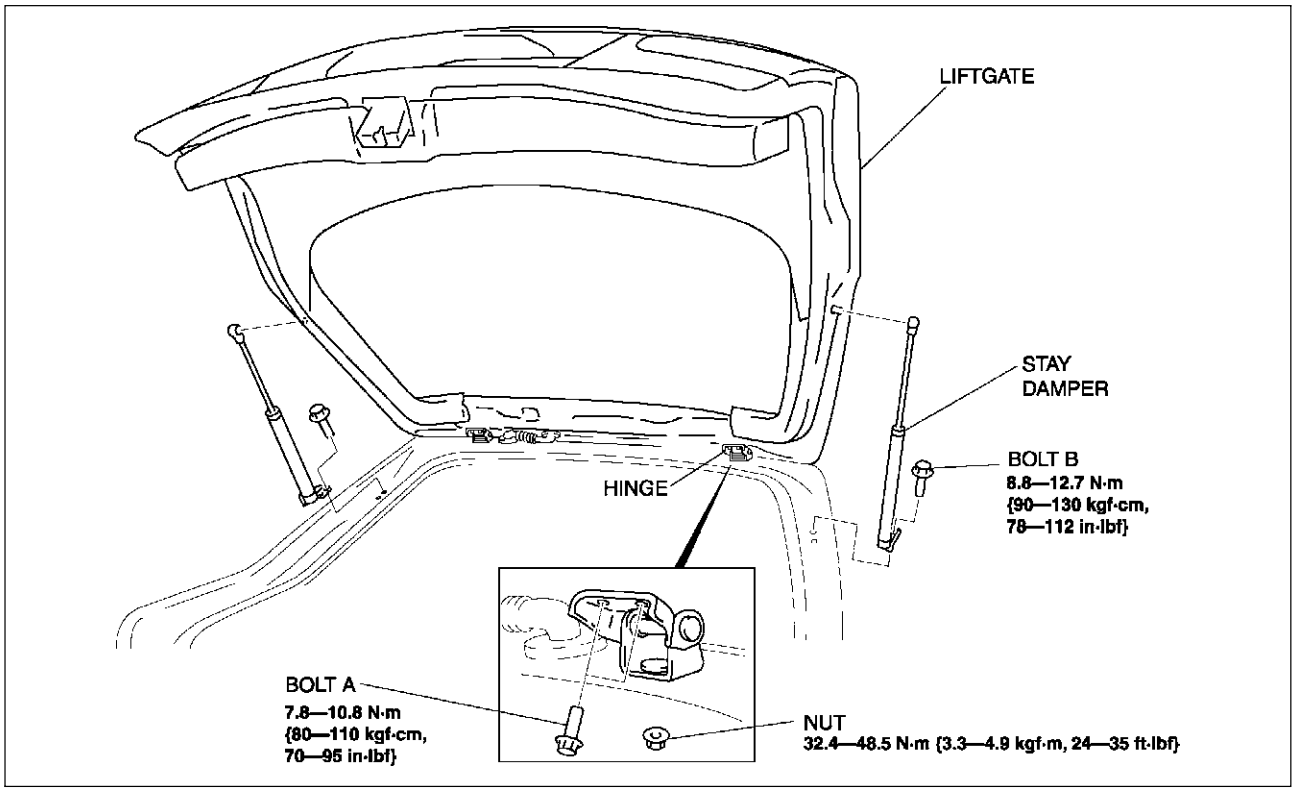

A6E7722W001

10. Install in the reverse order of removal.

LIFTGATE DISASSEMBLY/ASSEMBLY

A6E772262010W02

1. Disconnect the negative battery cable.
2. Remove the liftgate lower trim.
3. To remove the liftgate outer handle and liftgate key cylinder, remove the rear finisher.
4. To remove the stud ball, separate the stud ball and the stay damper.
5. Disassemble in the order indicated in the table.
6. Assemble in the reverse order of disassembly.

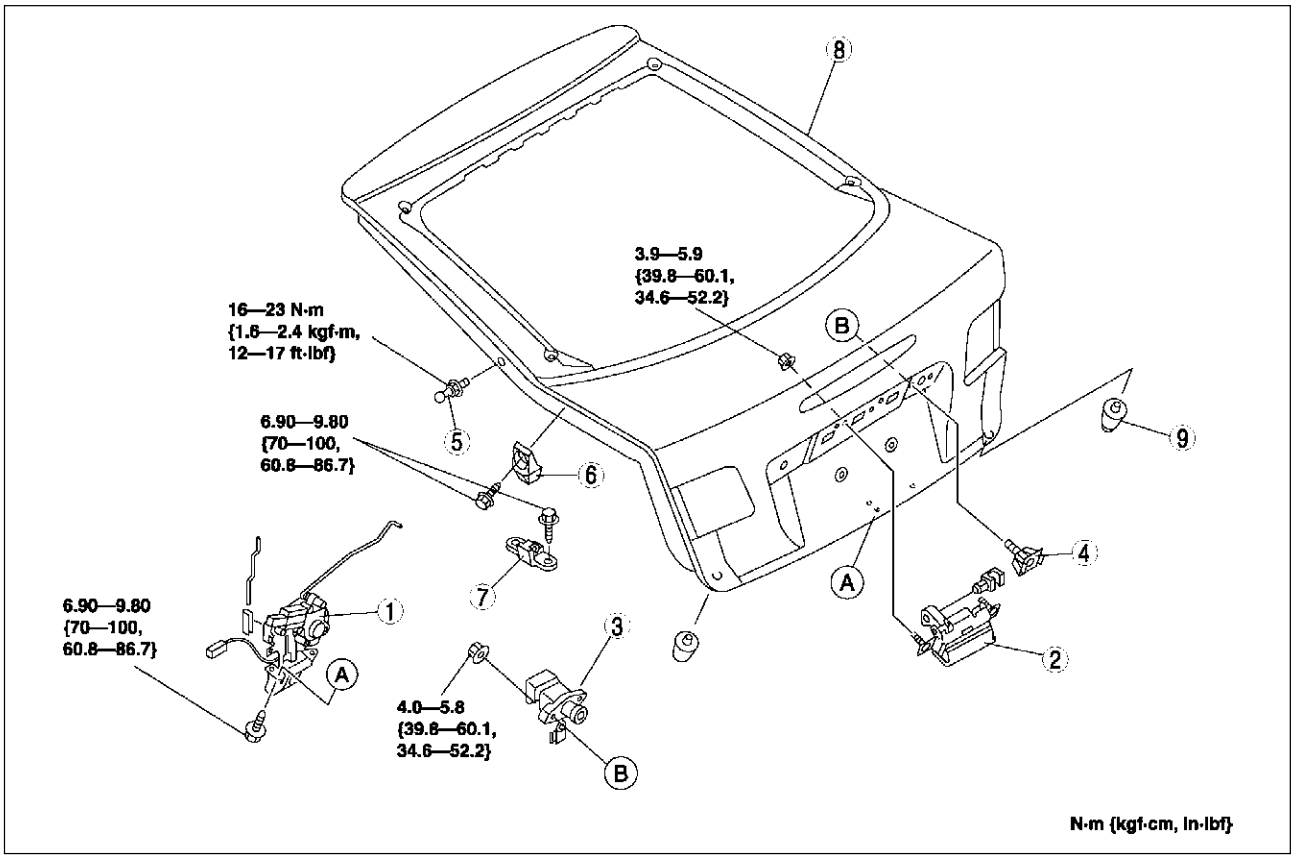

A6E7722W007

1	Liftgate latch and lock actuator
2	Liftgate outer handle
3	Liftgate key cylinder
4	Clip
5	Stud ball

6	Liftgate wedge
7	Liftgate dovetail
8	Liftgate
9	Stpper

STAY DAMPER DISPOSAL

A6E772262620W01

1. Referring to procedures for trunk lid stay damper disposal, dispose of the liftgate stay damper.

LIFTGATE ADJUSTMENT

A6E772262010W03

1. Measure the gap and height between the liftgate and the body.
2. If not as specified, loosen the liftgate hinge installation bolts or the liftgate striker installation screws, and reposition the liftgate.

   Clearance
   a: 3.0—7.0 mm {0.12—0.28 in}
   b: -1.0—3.4 mm {-0.04—013 in}
   c: 2.8—5.2 mm {0.11—0.24 in}
   d: -1.2—1.2 mm {0.05—0.05 in}
   e: 2.8—5.8 mm {0.11—0.22 in}
   f:4.0—8.0 mm {0.16—0.31 in}

3. Tighten the bolts or screws.

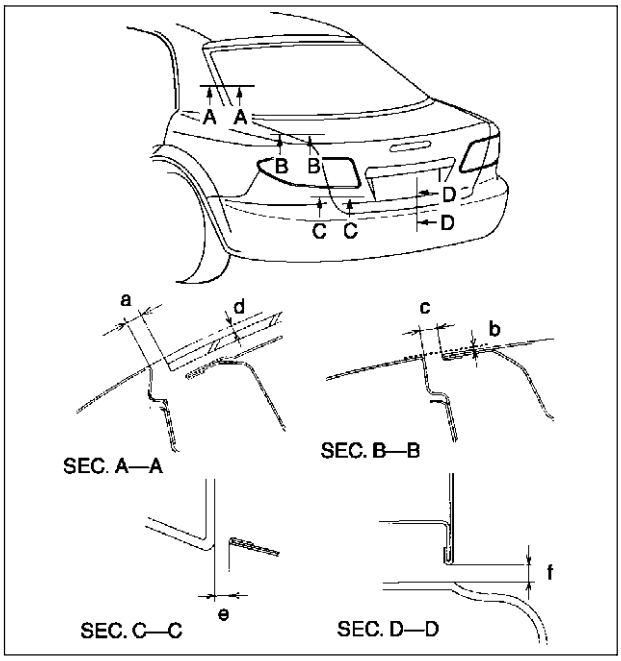

A6E7722W004

S

FUEL-FILLER LID AND OPENER

FUEL-FILLER LID AND OPENER REMOVAL/INSTALLATION

A6E772456890W01

1. To remove the fuel-filler lid opener, remove the left side trunk side trim (4SD) or trunk side lower trim (5HB).
2. To remove the fuel-filler lid opener cable, perform the following and turn over the floor covering.
   (1) Remove the driver-side front seat.
   (2) Remove the driver-side front scuff plate.
   (3) Remove the driver-side rear scuff plate.
   (4) Remove the driver-side B-pillar lower trim.
   (5) Remove the driver-side tire house trim.
   (6) Remove the rear seat cushion. (R.H.D., 4SD)
   (7) Remove the rear seat installation bolts (front side), then lift the rear seat cushion. (R.H.D., 5HB)
3. Remove in the order indicated in the table.

1	Fuel-filler lid
2	Lift spring
3	Fuel-filler lid opener
4	Cover
5	Fuel-filler lid opener lever
6	Fuel-filler lid opener cable

4. Install in the reverse order of removal.
5. Adjust the fuel-filler lid. (See S–46 FUEL-FILLER LID ADJUSTMENT.)

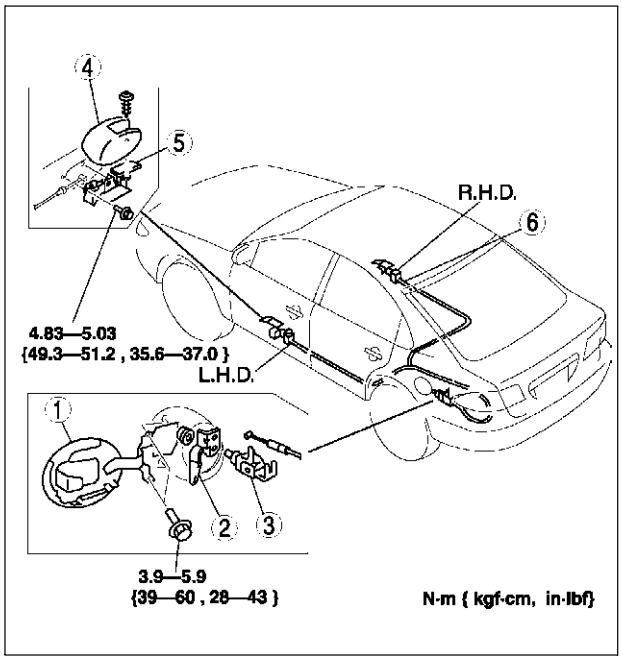

A6E7724W001

FUEL-FILLER LID ADJUSTMENT

A6E772442410W01

1. If not as specified, loosen the fuel-filler lid installation bolts, and reposition the fuel-filler lid.
2. Measure the gap and height between the fuel-filler lid and the body.

Clearance
a: 1.7—3.7 mm {0.067—0.145 in}
b: -0.5—1.5 mm {-0.019—0.059 in}

3. Tighten the bolts.

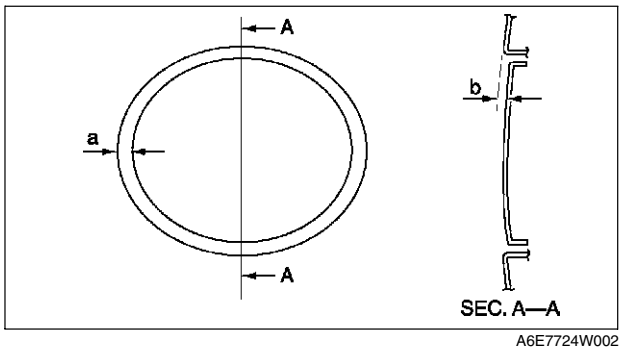

A6E7724W002

BUMPER

FRONT BUMPER REMOVAL/INSTALLATION

A6E772650031W01

1. Disconnect the negative battery cable.
2. Remove in the order indicated in the table.

1	Screw A
2	Fastener A
3	Screw B
4	Bolt
5	Fastener B
6	Front bumper (See S–47 Front Bumper Removal Note) (See S–48 Front Bumper Installation Note)

3. Install in the reverse order of removal.

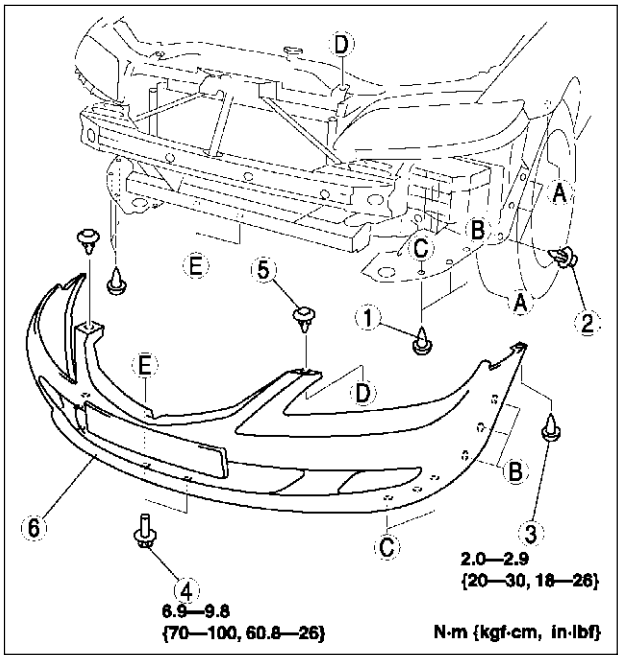

A6E7726W003

S

Front Bumper Removal Note

1. Pull the front bumper ends (wheel arch) outward to disengage from the bumper slider.

Caution

- **If only one side of the front bumper is disengaged from the bumper slider and the bumper falls, it could be damaged. When disengaging the front bumper from the slider, secure the bumper so that it does not fall.**

2. Remove the front bumper from the body.

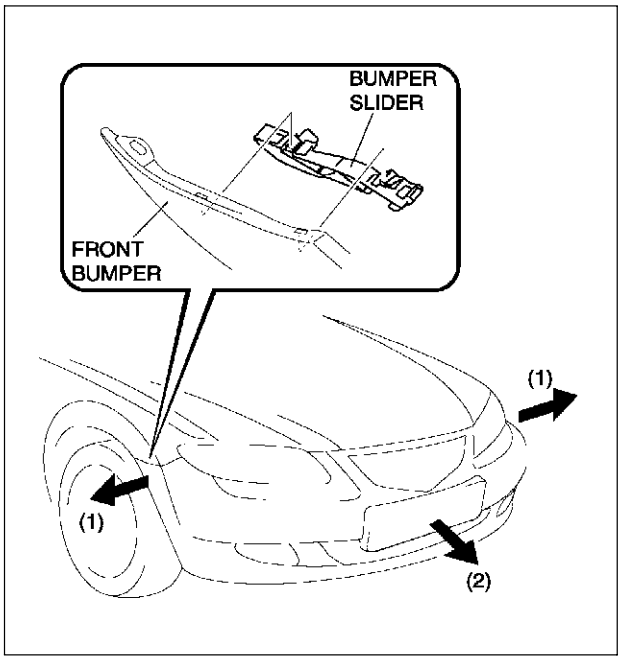

A6E7726W006

Front Bumper Installation Note

1. Spread the front bumper ends (wheel arches) apart.
2. Attach the front bumper to the body.
3. Press the front bumper connection portion into the body to engage with the bumper slider.

FRONT BUMPER DISASSEMBLY/ASSEMBLY

1. Disassemble in the order indicated in the table.

1	Front bumper mesh
2	Front bumper fascia

2. Assemble in the reverse order of disassembly.

A6E772650031W02

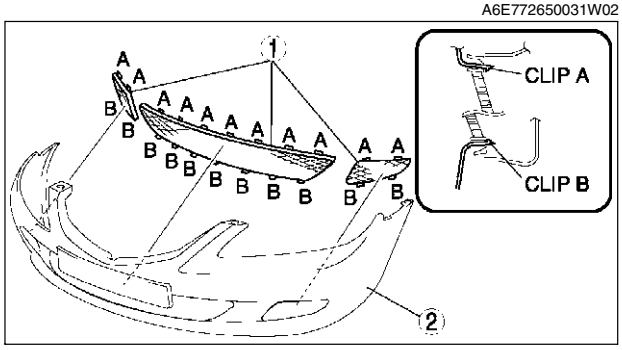

A6E7726W004

BUMPER REINFORCEMENT REMOVAL/INSTALLATION

A6E772650031W03

1. Disconnect the negative battery cable.
2. Remove the front bumper. (See S–47 FRONT BUMPER REMOVAL/INSTALLATION.)
3. Remove the headlight. (See T–26 FRONT COMBINATION LIGHT REMOVAL/INSTALLATION.)
4. Suport the radiator and the condenser using the wire.
5. Remove the bolt.
6. Remove the bumper reinforcement.
7. Install in the reverse order of removal.

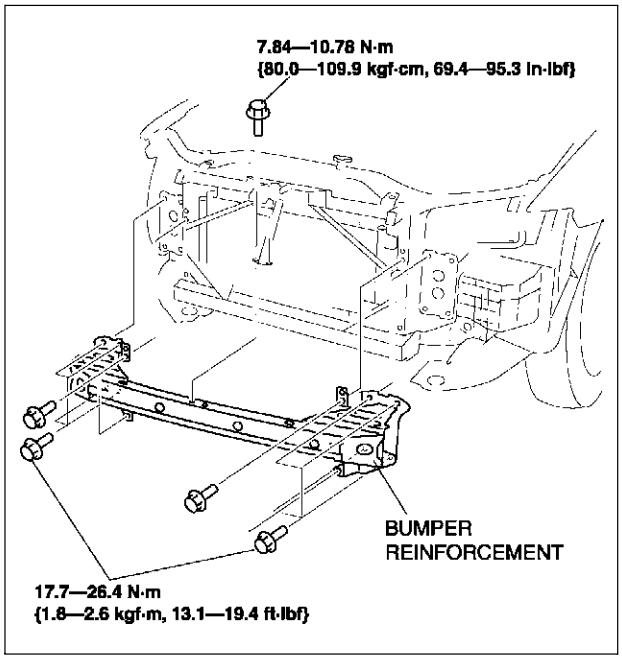

A6E7726W005

REAR BUMPER REMOVAL/INSTALLATION

A6E772650221W01

1. Disconnect the negative battery cable.
2. Remove the rear combination light.
3. Remove in the order indicated in the table.

1	Screw A
2	Screw B
3	Screw C
4	Fastener A
5	Bolt A
6	Fastener B
7	Rear bumper (See S–49 Rear Bumper Removal Note) (See S–49 Rear Bumper Installation Note)
8	Refractor (See S–50 Refractor Removal Note)
9	Bolt B
10	Rear bumper reinforcement

4. Install in the reverse order of removal.

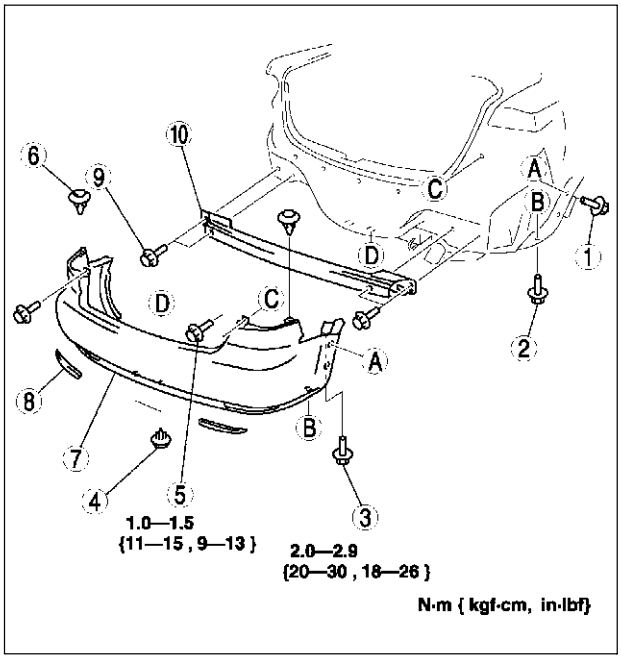

A6E7726W001

Rear Bumper Removal Note

1. Pull the rear bumper ends (wheel arch) outward to disengage with the bumper slider.

Caution

- **If only one side of the rear bumper is disengaged from the bumper slider and the bumper falls, it could be damaged. When disengaging the rear bumper from the slider, secure the bumper so that it does not fall.**

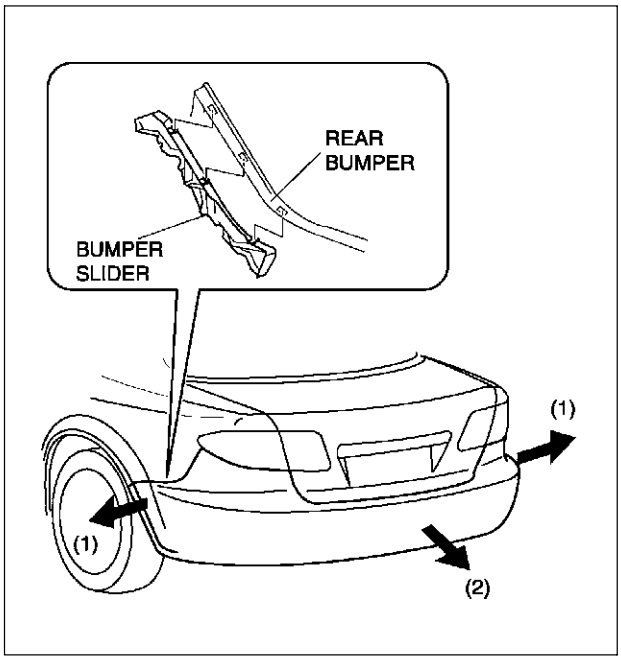

A6E7726W007

Rear Bumper Installation Note

1. Spread the rear bumper ends (wheel arches) apart.
2. Attach the rear bumper to the body.
3. Press the rear bumper connection portion into the body to engage with the bumper slider.

Refractor Removal Note

1. Lift the refractor up in the direction of the arrow, then unhook it from the rear bumper.

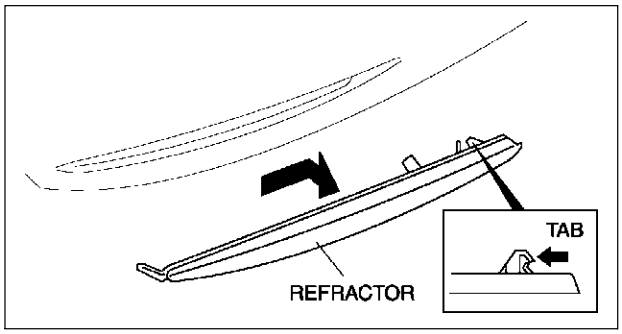

A6E7726W002

EXTERIOR ATTACHMENT

RADIATOR GRILLE REMOVAL/INSTALLATION

A6E772850710W01

1. Remove the screws.
2. Press clip A in the direction of the arrow, pll the radiator grille outward and remove from the front bumper.
3. Install in the reverse order of removal.

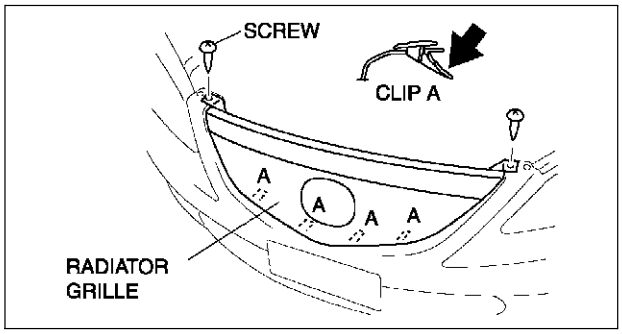

A6E7728W005

COWL GRILLE REMOVAL/INSTALLATION

A6E772850790W01

1. Remove the windshield wiper arm and blade. (See T–57 WINDSHIELD WIPER ARM AND BLADE REMOVAL/INSTALLATION.)
2. Remove in the order indicated in the table.

1	Front fender molding
2	Weatherstrip
3	Cowl grille

3. Install in the reverse order of removal.

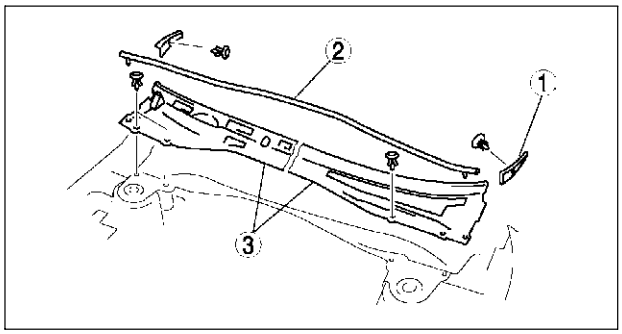

A6E7728W004

FRONT FLAP REMOVAL/INSTALLATION

A6E772851840W01

1. Remove the screws and fastner.
2. Remove the front flap.
3. Install in the reverse order of removal.

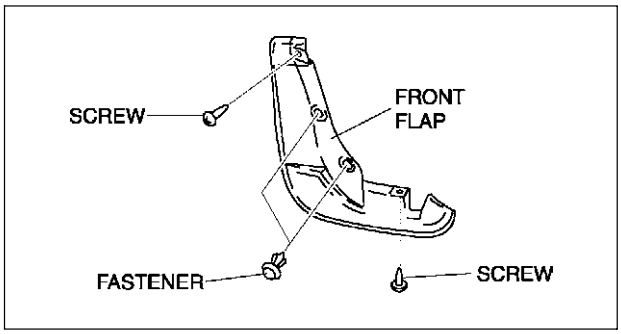

A6E7728W011

REAR FLAP REMOVAL/INSTALLATION

A6E772851940W01

1. Remove the screws.
2. Remove the rear flap.
3. Install in the reverse order of removal.

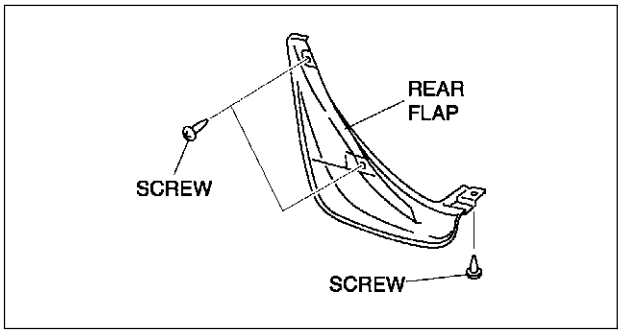

A6E7728W012

S

REAR DOOR GARNISH REMOVAL

A6E772850030W01

1. Disengage the door garnish clips using a fastener remover.
2. While cutting the double-sided adhesive tape using a screwdriver or a razor, separate the rear door garnish from the body.

Warning

- **Using a razor with bare hands can cause injury. Always wear gloves when using a razor.**

3. Remove the rear door garnish.

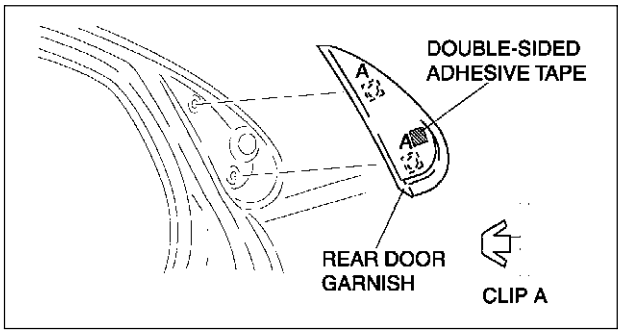

A6E7728W009

REAR DOOR GARNISH INSTALLATION

A6E772850030W02

Note
- Double-sided adhesive tape has already been attached to the new rear door garnish.

Warning
- **Using a razor with bare hands can cause injury. Always wear gloves when using a razor.**

1. When installing a new rear door garnish, follow the procedure below:
   (1) Remove the adhesive remaining on the body using razor.
   (2) Remove any grease or dirt from the adhesion surface of the body.
2. When reusing the rear door garnish, follow the procedure below:
   (1) Remove the adhesive remaining on the rear door garnish and the body using a razor.
   (2) Remove any grease or dirt from the adhesion surface of the rear door garnish and the body.
   (3) Apply primer to the bonding area of the rear door garnish.
   (4) Attach double-sided adhesive tape to the rear door garnish as shown.
3. Peel off the backing of the double-sided adhesive tape, then install the rear door garnish to the body.

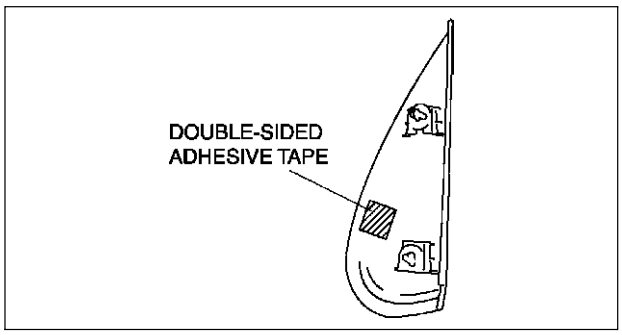

A6E7728W010

SIDE PROTECTOR REMOVAL

A6E772850680W01

1. Pry the side protector end **20—30 mm {0.8—1.1 in}** using a flathead screwdriver or a razor.

Warning
- **Using a razor with bare hands can cause injury. Always wear gloves when using a razor.**

Note
- The side protector is installed with double-sided adhesive tape. If the side protector is difficult to remove, soften the double-sided adhesive tape using a hot air blower.

2. Pull the side protector toward you, then remove it.

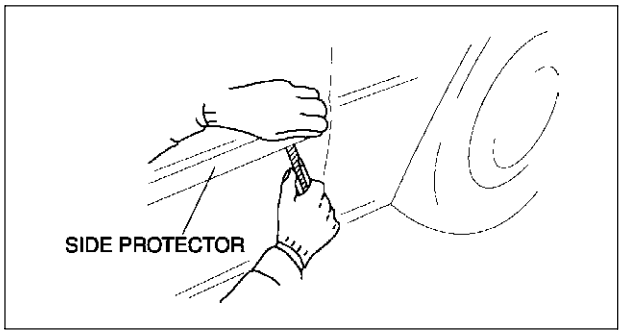

A6E7728W006

SIDE PROTECTOR INSTALLATION

A6E772850680W02

1. Remove the adhesive remaining on the side protector (if it will be reused) and the body using a razor.
2. Remove any grease or dirt from the adhesion surface of the side protector (if it will be reused) and the body.
3. Attach double-sided adhesive tape to the side protector as shown (if it will be reused).

Clearance
a: 30.0 mm {1.18 in}
b: 3.0 mm {0.11 in}
c: 12.0 mm {0.47 in}
d: 3.0 mm {0.11 in}
e: 3.0 mm {0.11 in}
f: 1.0—3.0 mm {0.04—0.11 in}
g: 5.0 mm {0.19 in}
h: 2.0 mm {0.07 in}

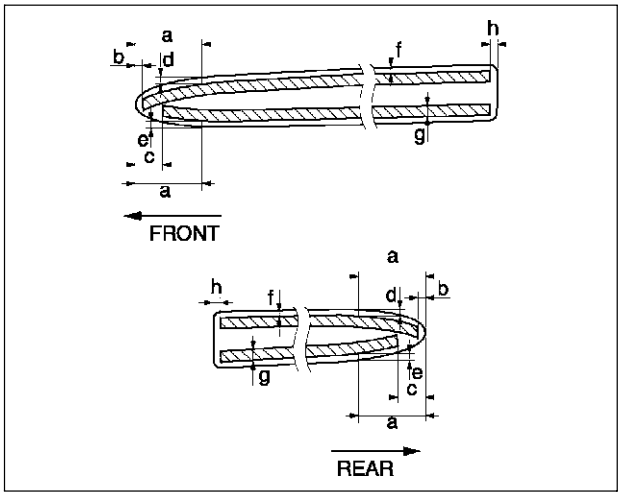

A6E7728W007

4. Peel off the backing paper from the double-sided adhesive tape and attach the side protector onto the body as shown.

Clearance
a: 1.2—4.2 mm {0.05—0.16 in}
b: 3.2—6.2 mm {0.13—0.24 in}

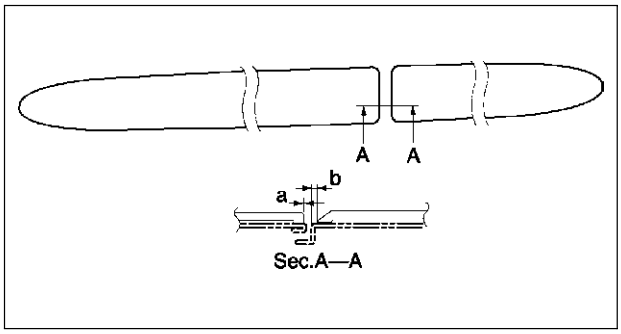

A6E7728W008

S

EXTRACTOR CHAMBER REMOVAL/INSTALLATION

A6E772851920W01

1. Remove the rear bumper. (See S–49 REAR BUMPER REMOVAL/INSTALLATION.)
2. Remove the left side trunk side trim.
3. Remove the screw.
4. Squeeze the clips with your fingers and remove the extractor chamber from the vehicle side.
5. Install in the reverse order of removal.

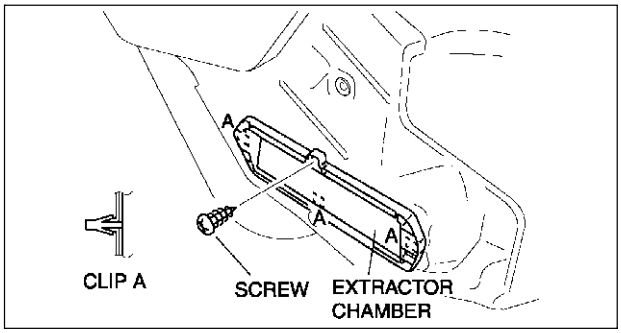

A6E7728W001

REAR FINISHER REMOVAL/INSTALLATION

A6E772850850W01

1. Remove the trunk lid trim (4SD).
2. Remove the liftgate lower trim (5HB).
3. Remove the nuts.
4. Pull the rear finisher toward you, then disengage clip A from the body.
5. Install in the reverse order of removal.

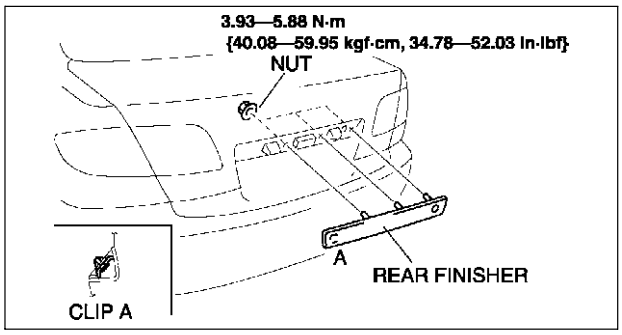

A6E7728W002

REAR SPOILER REMOVAL/INSTALLATION

A6E772851920W02

1. Remove the trunk lid trim. (4SD)
2. Remove the liftgate lower trim. (5HB)
3. Remove the bolts.
4. Disconnect the high-mount brake light connector. (4SD)
5. Remove the rear spoiler.
6. Install in the reverse order of removal.

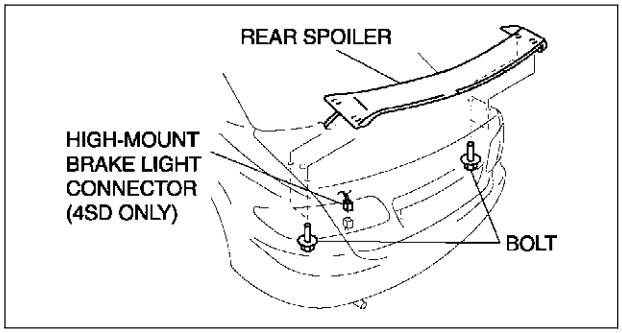

A6E7728W003

ROOF CARRIER BRACKET REMOVAL/INSTALLATION

A6E772870600W01

1. Remove the headliner.
2. Remove the nuts.
3. Remove the roof carrier bracket.
4. Install in the reverse order of removal.

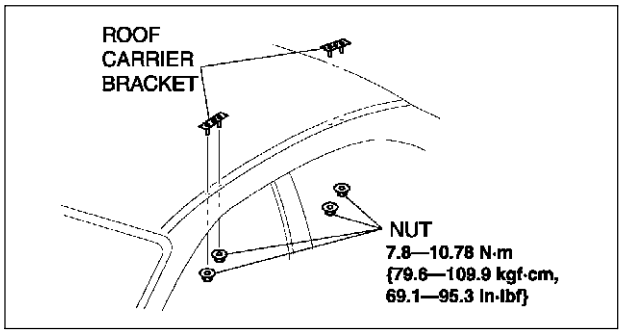

A6E7728W013

MOLDING

FRONT BELTLINE MOLDING REMOVAL

A6E773050640W01

Note
- When removing the front beltline molding, the clip may be damaged. If the clip is damaged, replace it with a new one.

1. Pull the A section upward and remove the clip.
2. Rotate the B section of the front beltline molding in direction (2), along the direction (1) shown in the figure and remove it from the body.

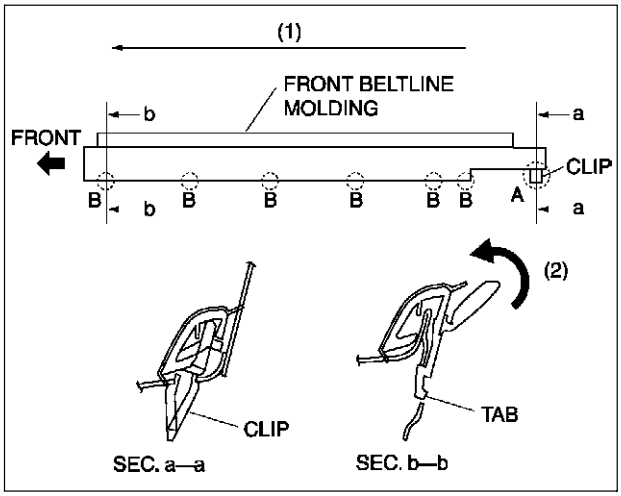

A6E7730W001

FRONT BELTLINE MOLDING INSTALLATION

A6E773050640W02

1. Press the clip into the body.
2. Press in the B section of the front beltline molding along the direction (1) shown in the figure to attach it to the body.

Note
- If the front beltline molding is difficult to attach, apply soapy water.

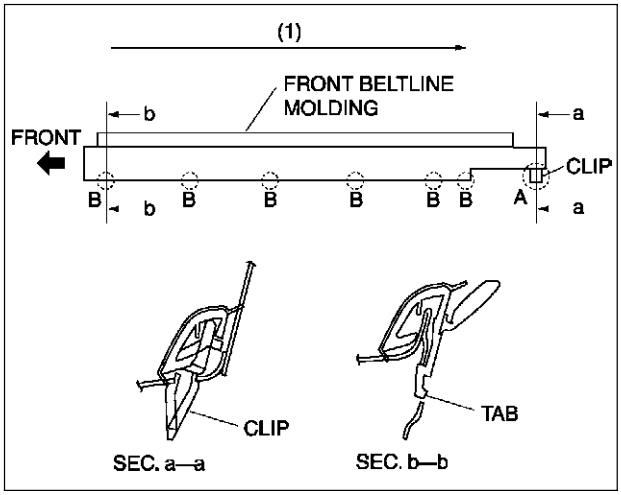

A6E7730W003

S

REAR BELTLINE MOLDING REMOVAL

A6E773050660W01

Note
- When removing the rear beltline molding, the clip may be damaged. If the clip is damaged, replace it with a new one.

1. Pull the A section upward and remove the clip.
2. Rotate the B section of the front beltline molding in direction (2), along the direction (1) shown in the figure and remove it from the body.
3. Pull the C section upward and remove the clip. Then remove the front beltline molding.

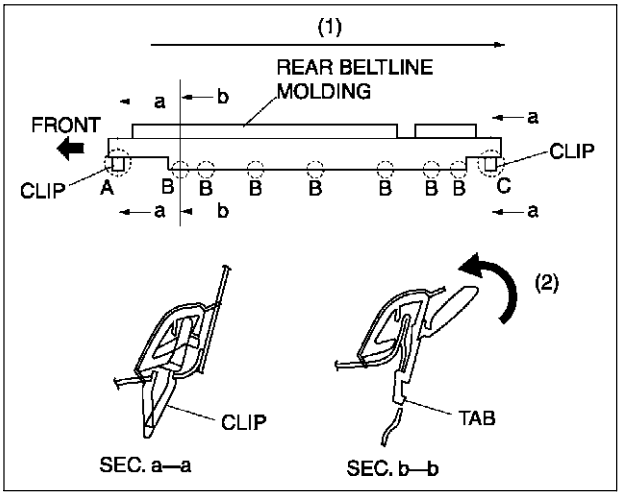

A6E7730W004

REAR BELTLINE MOLDING INSTALLATION

A6E773050660W02

1. Press the clip at the C section into the body.
2. Press in the B section of the rear beltline molding along the direction (1) to attach it to the body.
3. Press the clip at the A section in and attach the rear beltline molding.

Note
- If the rear beltline molding is difficult to attach, apply soapy water.

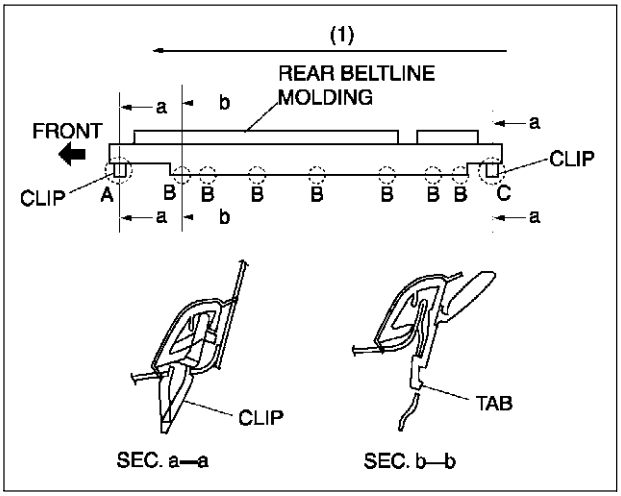

A6E7730W005

ROOF MOLDING REMOVAL

1. Detach the clips which secure A and B sections of roof molding, using a screwdriver or equivalent tool.
2. While pulling the roof molding up, detach the fit for the T stat of the A section and the roof molding and then remove the roof molding.

A6E773050620W01

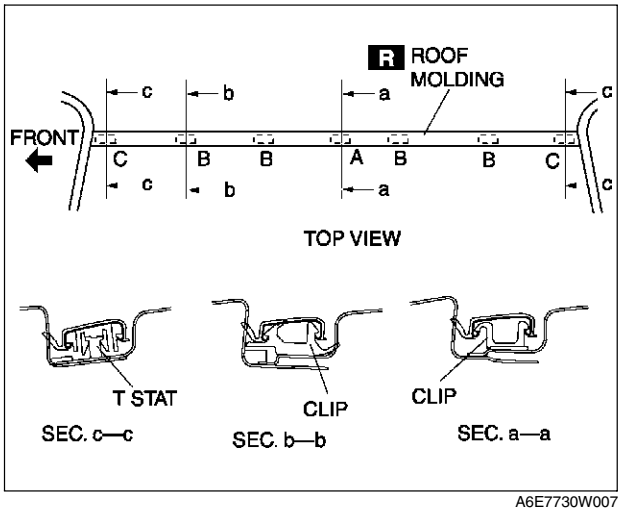

A6E7730W007

ROOF MOLDING INSTALLATION

1. Attach the roof molding to the T stud at the A section.
2. Press in the roof molding along the direction (1) shown in the figure and attach it to the clip A at the B section.
3. Hook the roof molding to the clip B at the C section, press it in, and attach the roof molding to the clip B.
4. Press the roof molding along the direction (2) shown in the figure and attach it to the clip A at the B section.
5. Attach the roof molding to the T stud at the D section.

A6E773050620W02

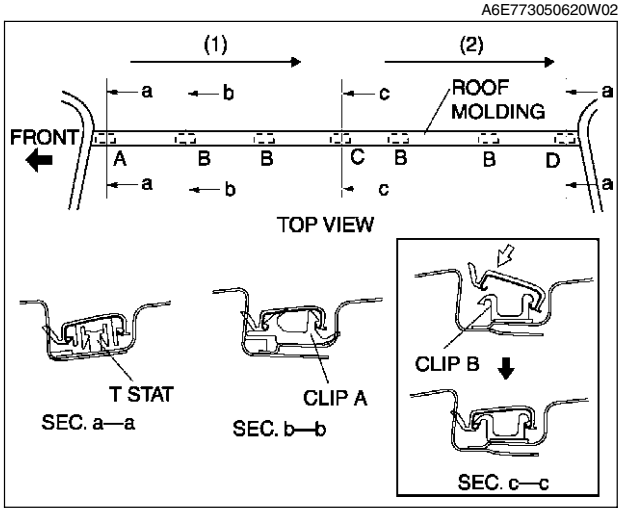

A6E7730W006

S

OUTSIDE MIRROR

POWER OUTSIDE MIRROR REMOVAL/INSTALLATION

A6E773269110W01

1. Disconnect the negative battery cable.
2. Remove the inner garnish.
3. Remove the front door trim.
4. Disconnect the power outside mirror connector.
5. Remove the screws and the mirror retention clips.
6. Remove the power outside mirror.
7. Install in the reverse order of removal.

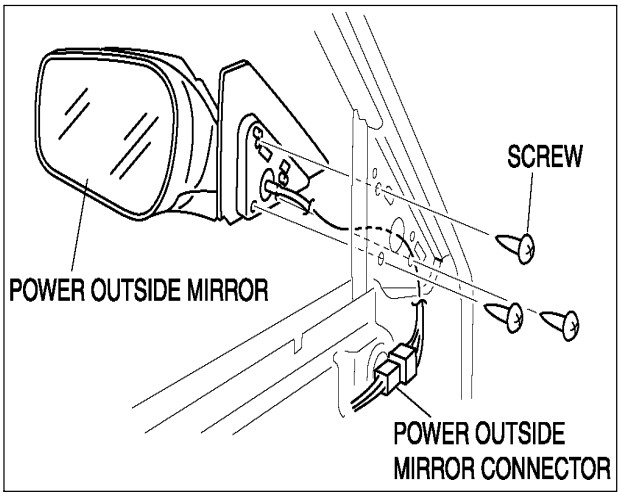

A6E7732W006

POWER OUTSIDE MIRROR DISASSEMBLY/ASSEMBLY

A6E773269110W02

1. Disassemble in the order indicated in the table.

1	Outside mirror glass (See S–58 Outside Mirror Glass Disassembly Note) (See S–59 Outside Mirror Glass Assembly Note)
2	Connector (with heated outside mirror)
3	Cover (See S–59 Cover Disassembly Note)
4	Outside mirror holder

2. Assemble in the reverse order of disassembly.

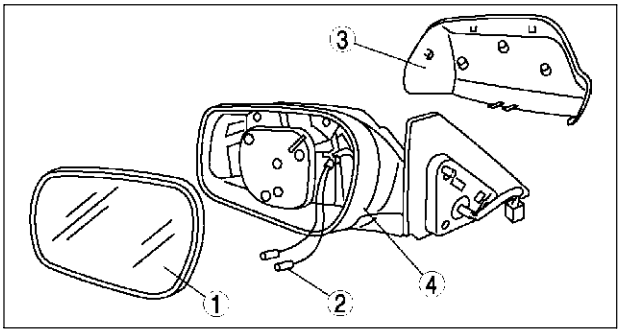

A6E7732W002

Outside Mirror Glass Disassembly Note

1. Press area A of the glass so that area B moves toward you.
2. Insert a screwdriver into the notch and remove the glass from the mirror base.

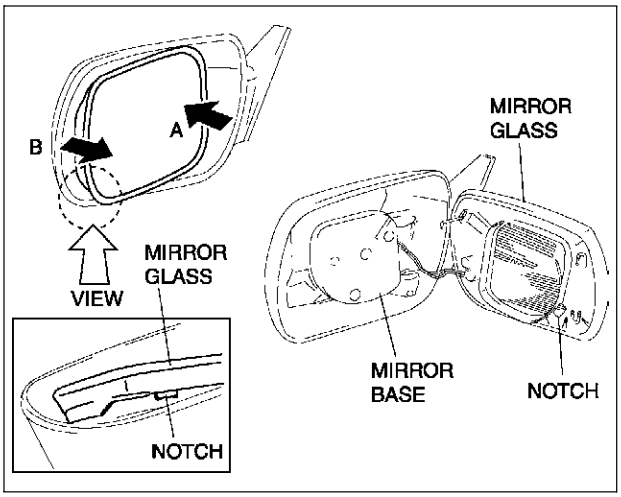

A6E7732W003

Cover Disassembly Note

1. Pull off the mirror holder tab with a screwdriver and press the mirror cover tab downward.

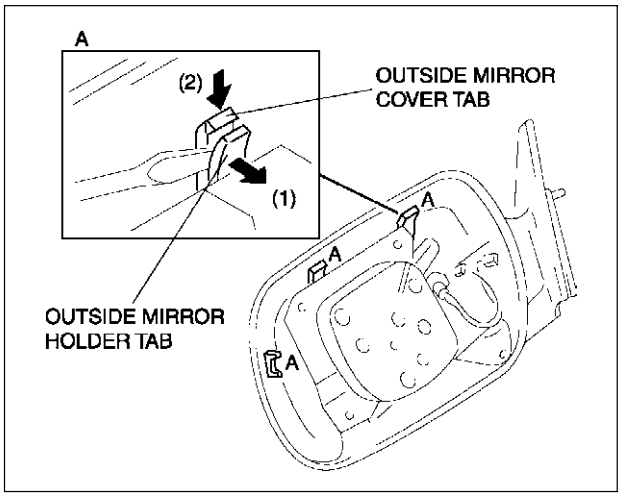

A6E7732W004

Outside Mirror Glass Assembly Note

1. Press the mirror into the base so that the pin does not dislodge.

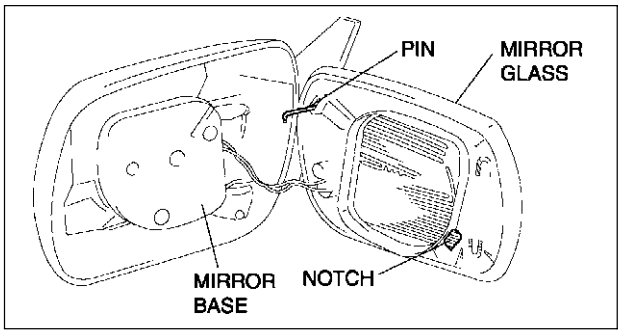

A6E7732W005

POWER OUTSIDE MIRROR INSPECTION

A6E773269110W03

1. Disconnect the power outside mirror connector.
2. Apply battery positive voltage to the power outside mirror terminals and inspect the operation of the power outside mirror.
   - If not as specified, replace the power outside mirror.

Mirror operation	Terminal	
	B+	GND
Up	B	D
Down	D	B
Left	F	D
Right	D	F

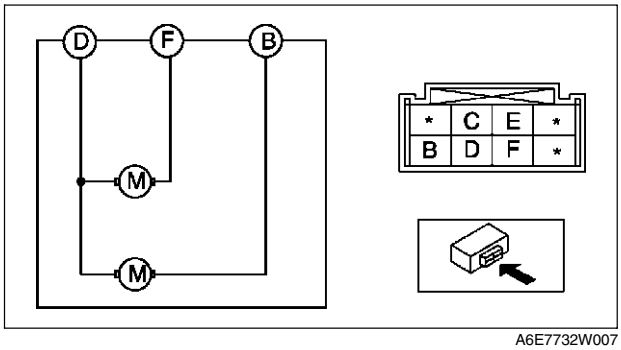

A6E7732W007

3. Inspect for continuity between the power outside mirror heater terminals.
   - If not as specified, replace the power outside mirror.

○—○ : Continuity

Mirror operation	Terminal	
	C	E
Heater	○	○

A6E7732W010

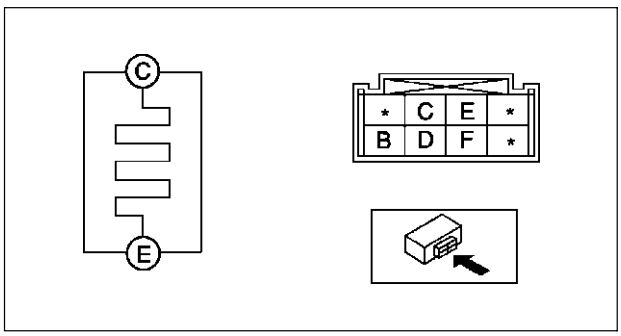

A6E7732W009

S

POWER OUTSIDE MIRROR SWITCH REMOVAL/INSTALLATION

A6E773266600W01

1. Disconnect the negative battery cable.
2. Remove the front door trim.
3. Remove the screws and the power outside mirror switch.
4. Install in the reverse order of removal.

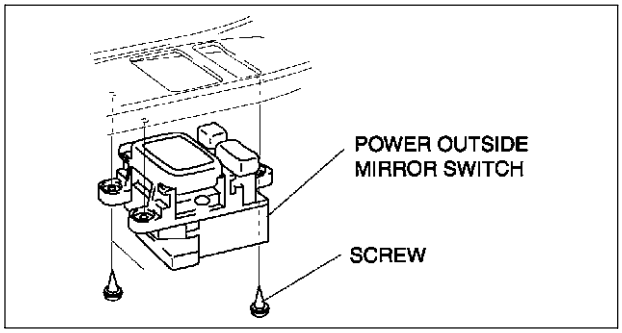

A6E7732W008

POWER OUTSIDE MIRROR SWITCH INSPECTION

A6E773266600W02

1. Inspect for continuity between the power outside mirror switch terminals using an ohmmeter.
   - If not as specified, replace the power outside mirror switch.

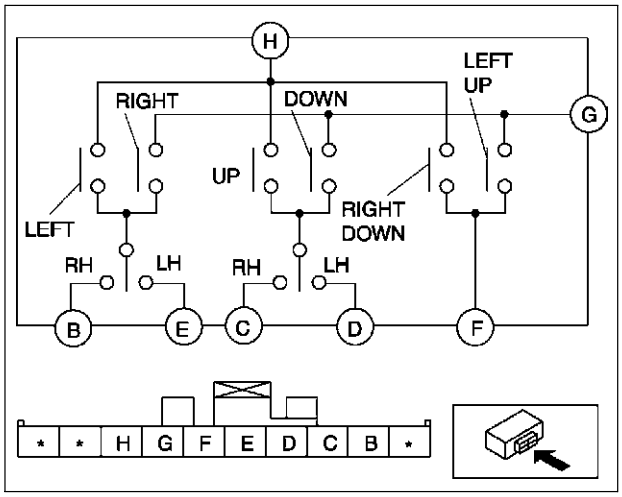

A6E7732W001

○—○ : Continuity

OPERATION		D	C	E	B	H	G	F
LH	UP	○		◌		○	○	○
	DOWN	○		◌		○	○	○
	LEFT	◌		○		○	○	○
	RIGHT	◌		○		○	○	○
RH	UP		○		◌	○	○	○
	DOWN		○		◌	○	○	○
	LEFT		◌		○	○	○	○
	RIGHT		◌		○	○	○	○

A6E7734W003

REARVIEW MIRROR

REARVIEW MIRROR REMOVAL

1. Insert a screwdriver between the mirror and the base.
2. Push the base pin down to remove the rearview mirror.

A6E773469220W01

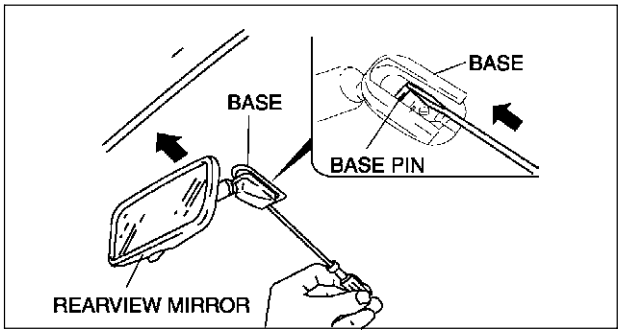

A6E7734W001

REARVIEW MIRROR INSTALLATION

1. Install the rearview mirror onto the base.

A6E773469220W02

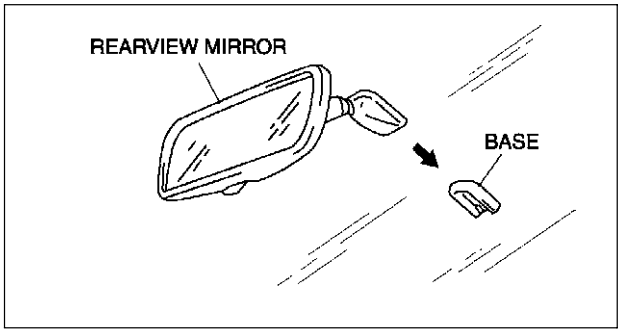

A6E7734W002

BASE REMOVAL

1. Remove the rearview mirror.
2. Wind each end of a wire around a bar.

Warning

- **Using a SST (piano wire) with bare hands can cause injury. Always wear gloves when using a SST (piano wire).**

Note

- Use a long sawing action to spread the work over the whole length of the **SST** (piano wire) to prevent it from breaking.

3. Saw through the sealant to remove the base.

A6E773469240W01

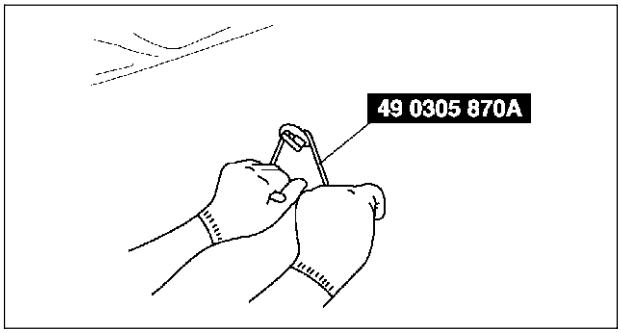

A6E7734W006

BASE INSTALLATION

A6E773469240W02

1. Cut away all of the original sealant using a razor.
2. Clean and degrease the ceramic coating on the glass and the base.
3. Apply primer to the bonding area of the glass and the base.

Caution

- **Keep the area free of dirt and grease, and do not touch the surface or the primer may not properly bond to the surface of the glass.**

4. Apply a height of **3.0 mm {0.12 in}** sealant to the base.

Note

- Use only glass primer on the glass, and body primer on the base. Allow the primer to dry for **approximately 30 minutes**.

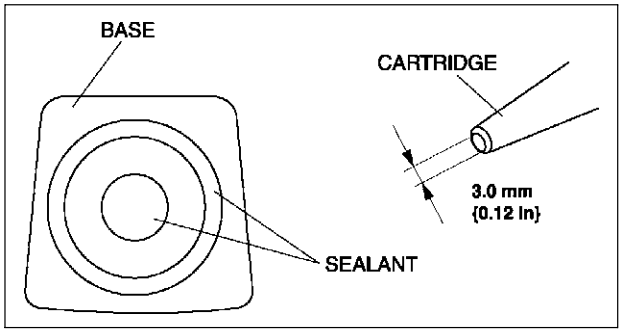

A6E7734W004

5. Center the base in the ceramic coating and press it onto the glass.
6. Use isopropyl alcohol to remove any excess repair sealant.

Hardening time of sealant

Temperature	Surface hardening time	Time required until vehicle can be put into service
5 °C {41 °F}	Approx. 1.5 h	Approx. 12 h
20 °C {68 °F}	Approx. 1 h	Approx. 4 h
35 °C {95 °F}	Approx. 10 min.	Approx. 2 h

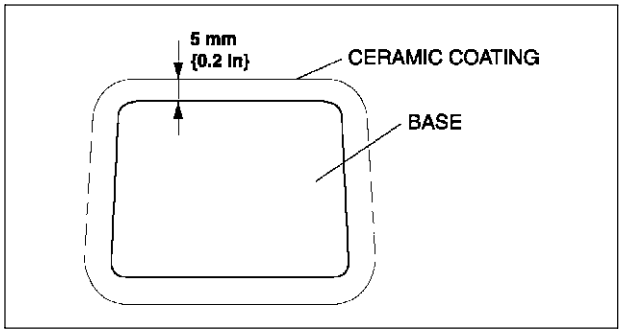

A6E7734W005

7. Install the rearview mirror.

REAR WINDOW DEFROSTER

FILAMENT REPAIR

A6E773663930W01

1. Use isopropyl alcohol to clean around the damaged section of the filament.
2. Attach tape above and below the damaged section of the filament.
3. Using a small brush or marking pen, repair the filament with silver paint or equivalent.
4. After **2—3 minutes**, carefully remove the tape without disturbing the repaired area.

Caution
- **Do not use the rear window defroster until the paint is completely dry. It may cause other malfunctions if it is used before the paint is dry.**

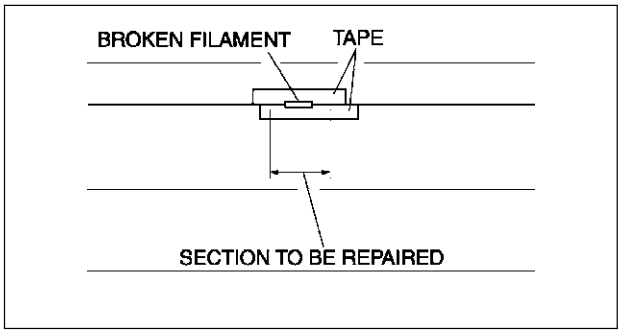

A6E7736W003

5. Use a hot air blower heated to **150 °C {302 °F}** for **30 minutes** or let the paint set for **24 hours** at **25 °C {77 °F}** to allow it to dry completely.

FILAMENT INSPECTION

A6E773663930W02

1. Turn the ignition switch to ON position.
2. Turn the rear window defroster switch on.

Caution
- **Directly touching the rear window defroster filament with the lead of the voltmeter will damage it. Wrap aluminum foil around the end of the lead and test the filament by touching it with the foil.**

3. Connect the positive (+) lead of the voltmeter to the positive side of each filament and the negative (–) lead to ground.
4. Gradually, slide the positive (+) lead from the positive side to the negative side and measure the voltage. Verify that the voltage decreases accordingly.
   - If the voltage is not as specified or it changes rapidly, the filament is faulty. Repair the filament.

Measurement place	Voltage (Reference value)
(1)→(2)	Approx. 12 V→ Approx. 0 V

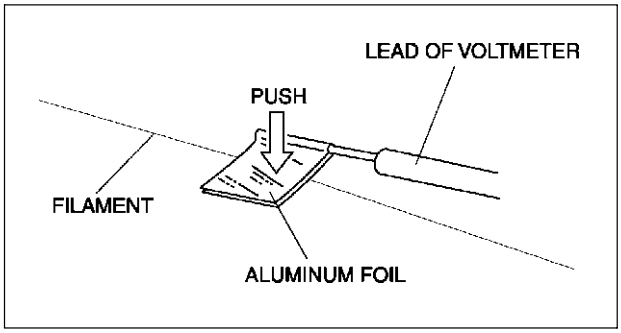

A6E7736W001

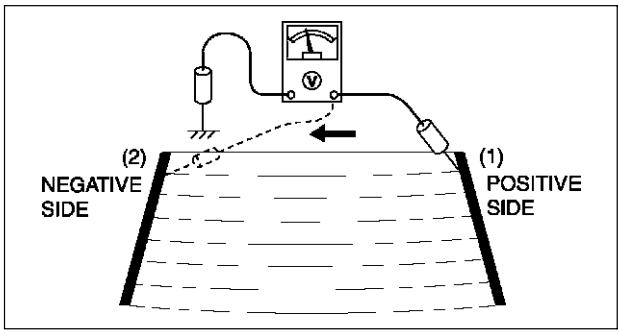

A6E7736W002

S

WINDOW GLASS

WINDSHIELD REMOVAL

A6E773863900W01

1. Remove the rearview mirror.
2. Remove the cowl grille.
3. Remove the headliner.
4. Apply protective tape along the edge of the body to protect it from damage.
5. Apply protective tape to the dashboard to protect it from damage.
6. Cut the lip of the windshield molding using a razor.

Warning

- **Using a razor with bare hands can cause injury. Always wear gloves when using a razor.**

Note

- The windshield molding is a replacement part.

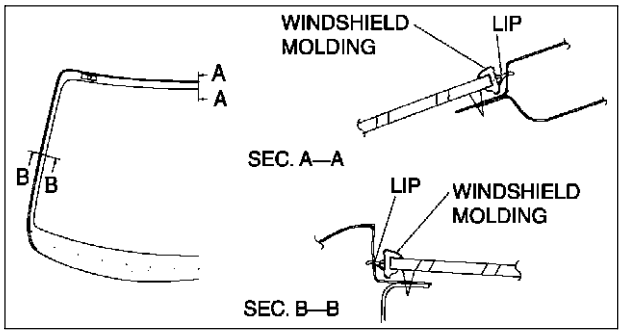

A6E7738W006

Not Reusing Windshield

1. Remove the base.

Note

- For the areas of the sealant that are difficult to cut, use a **SST** (piano wire) and follow the procedure under “Reusing Windshield.”

2. Use a **SST**, and insert the blade into the sealant.
3. Pull through the sealant around the edge of the glass.
4. Remove the winshield.

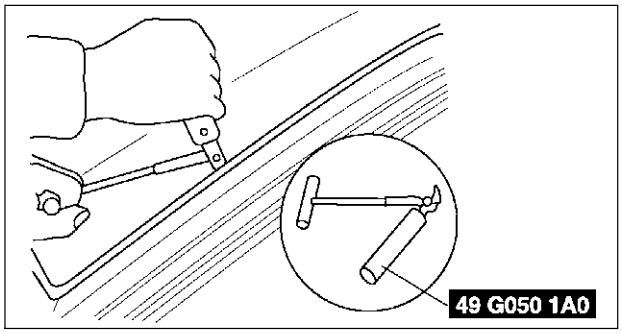

A6E7738W022

Reusing Windshield

Note

- Before removing the windshield from the body, mark the position of the windshield by affixing tape to the windshield and body panel.

1. Make a hole through the sealant, avoiding pins, from the inside of the vehicle using an awl.

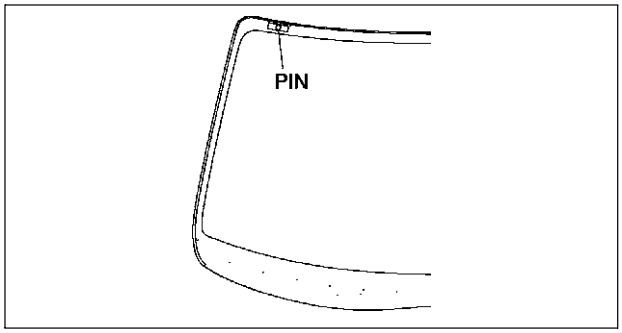

A6E7738W007

2. Pass the **SST** (piano wire) through the hole.

Warning
- **Using a SST (piano wire) with bare hands can cause injury. Always wear gloves when using a SST (piano wire).**

3. Wind each end of the **SST** (piano wire) around a bar.

Note
- Use a long sawing action to spread the work over the whole length of the **SST** (piano wire) to prevent it from breaking.

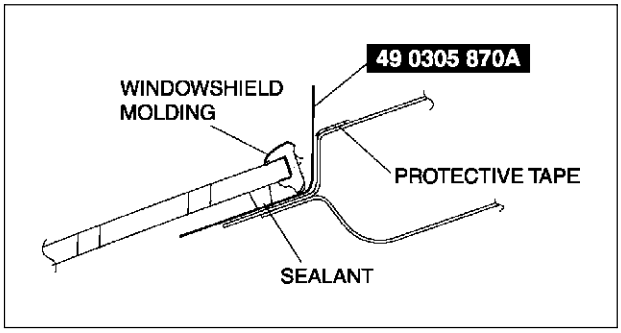

A6E7738W008

4. Working with another person, saw through the sealant around the edge of the glass.
5. Remove the windshield.
6. Remove the pins from the windshield.
7. Remove the winshield molding from the windshield glass.

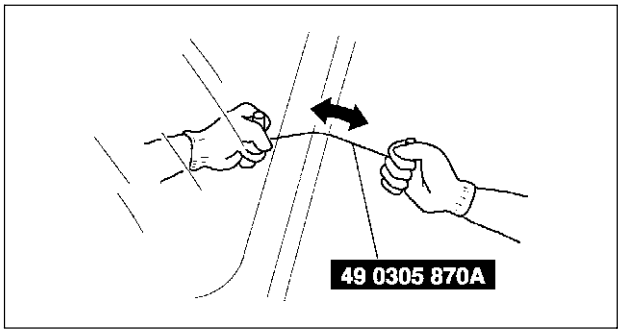

A6E7738W021

WINDSHIELD INSTALLATION

A6E773863900W02

S

Caution
- **To prevent the sealant from cracking or the glass from being pushed out by air pressure if a door is closed, open all of the windows and leave them open until the sealant has hardened.**

1. Cut away the old sealant using a razor so that **1—2 mm {0.04—0.07 in}** thickness of sealant remains around the circumference of the frame.

Warning
- **Using a razor with bare hands can cause injury. Always wear gloves when using a razor.**

2. If the sealant has come off completely in any one place, apply some primer after degreasing, and allow it **approximately 30 minutes** to dry. Then put on new sealant to create a **2 mm {0.08 in}** layer.
3. Clean and degrease an **approximately 50.0 mm {1.97 in}** wide strip around the circumference of the glass and the bonding area on the body.

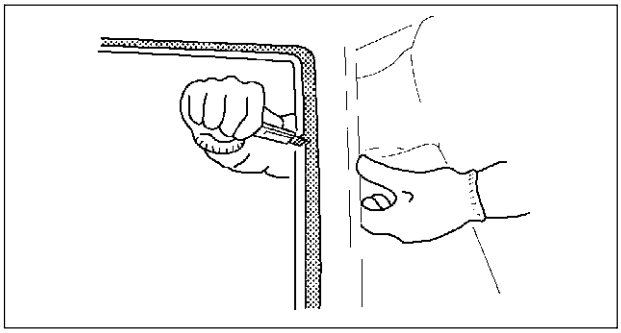
A6E7738W023

4. If installing reused glass, install pins at the ceramic void on the upper part of the windshield.
5. If installing reused glass, align the front windshield molding marking and the center of the upper section of the windshield, then install the molding to the winshield.
6. Use only glass primer on the glass, and body primer on the body and the molding. Allow it to dry for **approximately 30 minutes**.

Caution

- **Keep the area free of dirt and grease, and do not touch the surface or the primer may not properly bond to the surface of the glass and body, which may cause leaks to occur.**

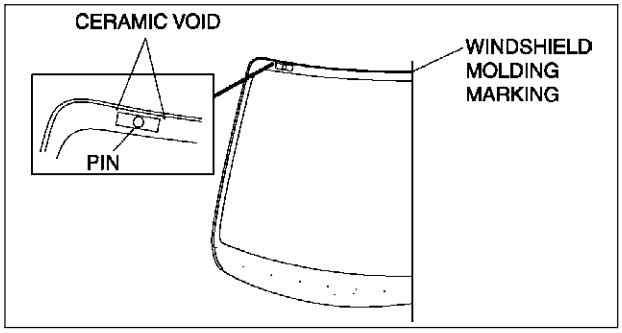

A6E7738W005

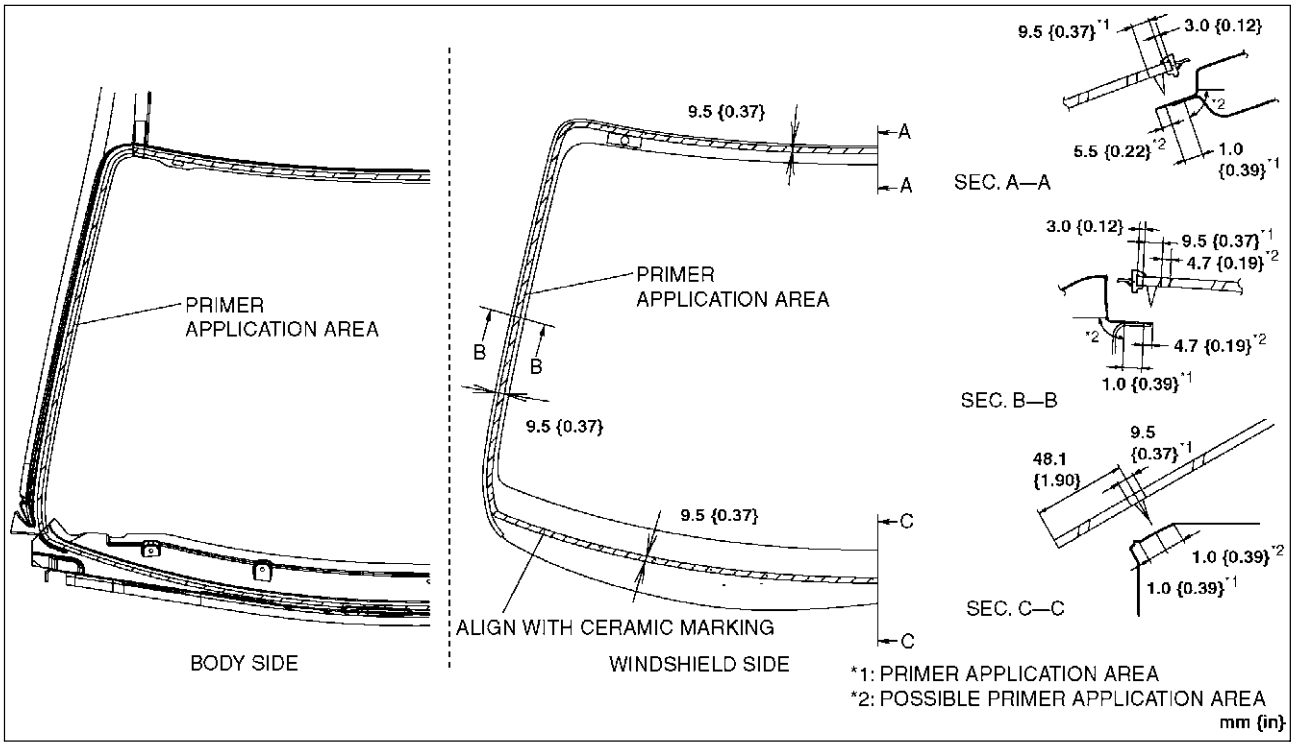

A6E7738W001

7. Apply urethane to the area of the glass surface as shown in the figure.
8. Set the the windshield in place and insert the pins into the body. Install the windshield.

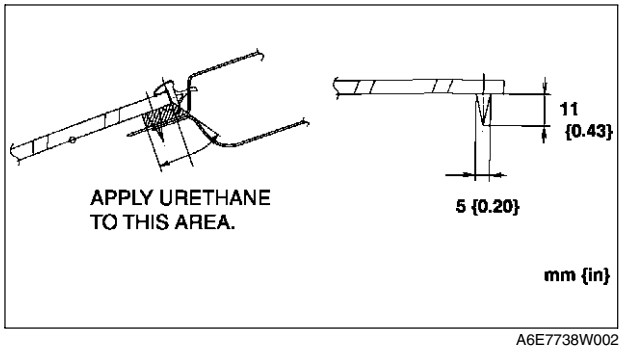

A6E7738W002

9. Verify that the gap of the A pillar part as shown the figure.

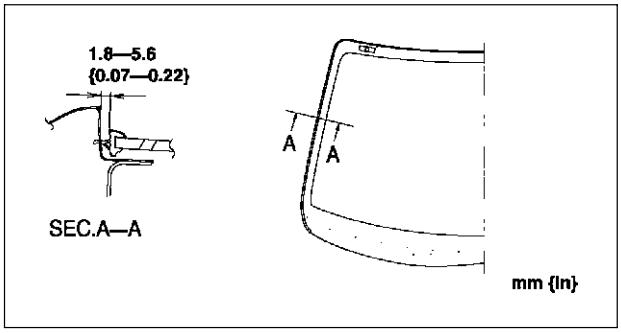

A6E7738W003

10. Keeping the measurement of the molding lip gap within specification, press completely along the perimeter of the glass.
11. Install the seaming welt.
12. Install the cowl grille.
13. Install the headliner
14. Install the interior light. (See T–48 FRONT MAP LIGHT REMOVAL/INSTALLATION.)
15. Allow the sealant to harden completely.

Sealant hardening time: 24 hours

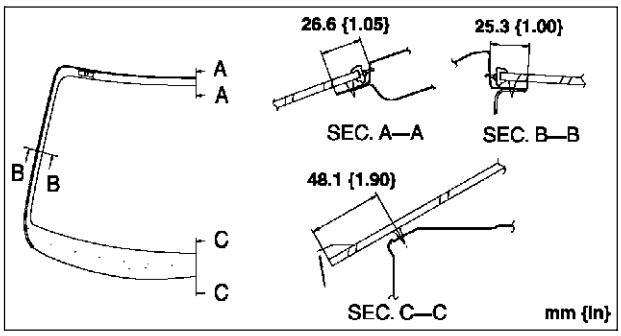

A6E7738W004

QUARTER WINDOW GLASS REMOVAL/INSTALLATION

A6E773862580W01

1. Remove the rear door trim.
2. Remove the screw and bolt, then remove the glass guide.
3. Remove the quarter window and the molding together in one piece.
4. Remove the molding from the glass.
5. Install in the reverse order of removal.

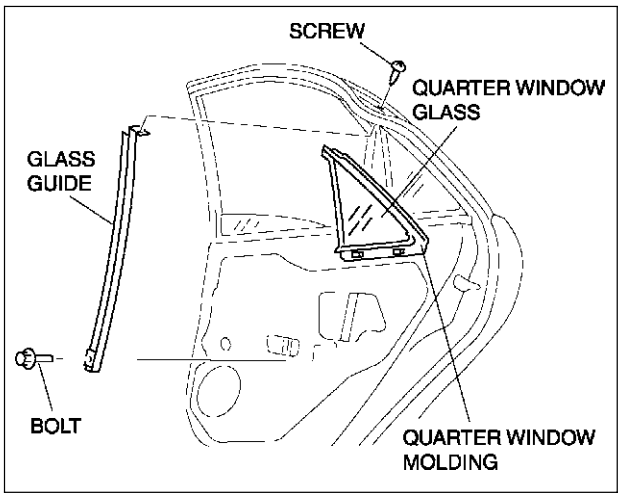

A6E7738W024

S

REAR WINDOW GLASS REMOVAL

A6E773863931W01

1. For the 4SD, remove the following parts:
   (1) Remove the headliner.
   (2) Remove the rear package trim.
2. For the 5HB, remove the following parts.
   (1) Remove the rear wiper arm and blade.
   (2) Remove the liftgate lower trim.
3. Apply protective tape along the edge of the body to protect it from damage.
4. Cut the lip of the rear window molding using a razor.

Warning

- **Using a razor with bare hands can cause injury. Always wear gloves when using a razor.**

Note

- The rear window molding is a replacement part.

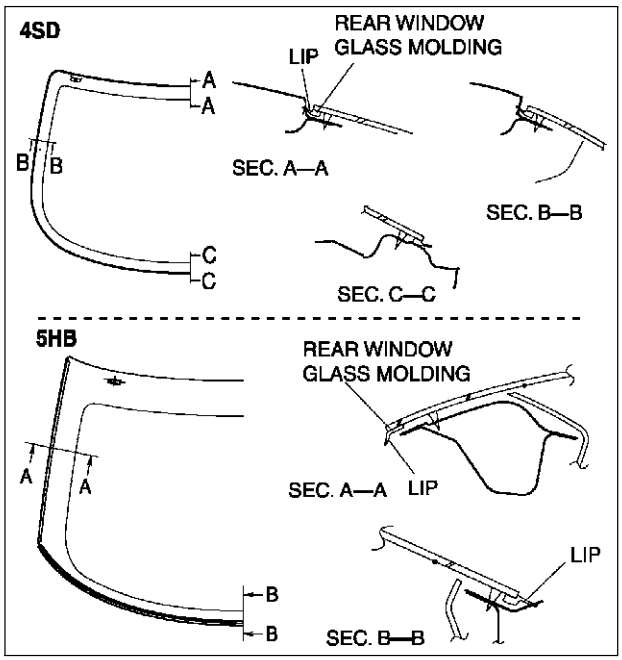

A6E7738W009

Not Reusing Glass

Note

- For the areas of the sealant that are difficult to cut, use a **SST** (piano wire) and follow the procedure under “Reusing Glass.”

1. Use a **SST**, and insert the blade into the sealant.
2. Pull through the sealant around the edge of the glass.
3. Remove the glass.

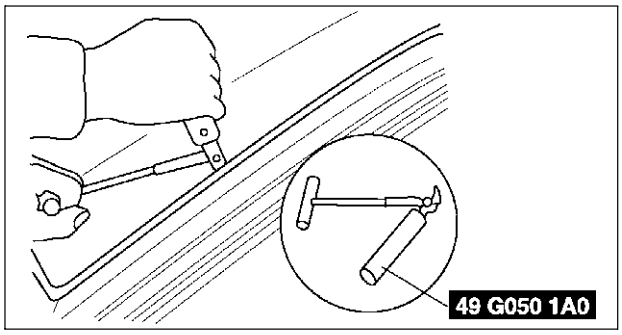

A6E7738W022

Reusing Glass

Note
- Before removing the rear window glass from the body, mark the position of the glass by affixing tape to the glass and body panel.

1. Make a hole through the sealant, avoiding pins, from the inside of the vehicle using an awl.

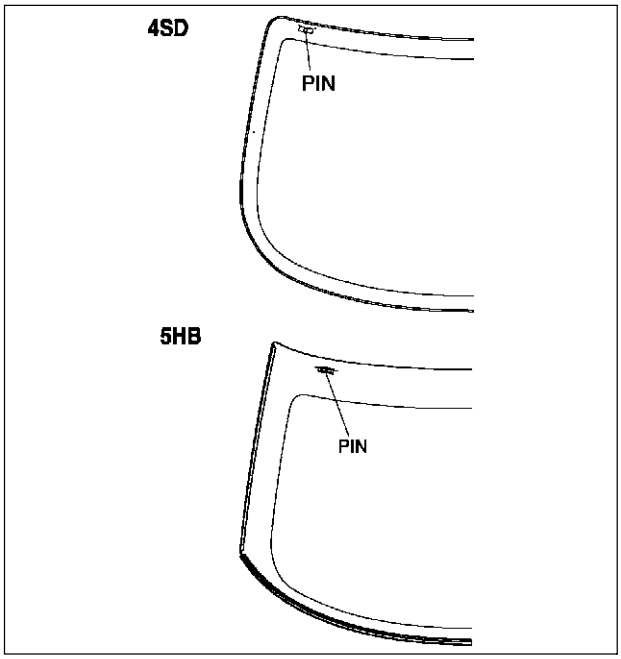

A6E7738W010

2. Pass the **SST** (piano wire) through the hole.

Warning
- **Using a SST (piano wire) with bare hands can cause injury. Always wear gloves when using a SST (piano wire).**

3. Wind each end of the **SST** (piano wire) around a bar.

Note
- Use a long sawing action to spread the work over the whole length of the **SST** (piano wire) to prevent it from breaking.

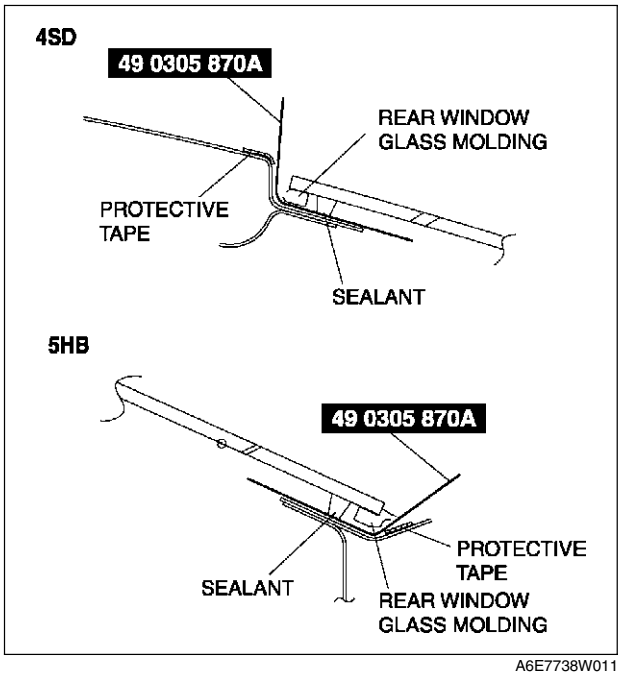

A6E7738W011

S

4. Working with another person, saw through the sealant around the edge of the glass.
5. Remove the rear window glass.
6. Remove the pins from the glass.
7. Remove the rear window molding from the glass.

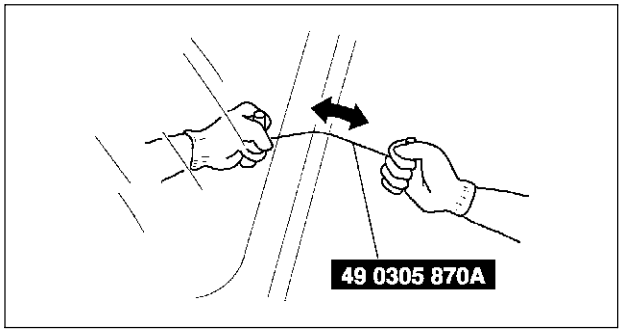

A6E7738W021

REAR WINDOW GLASS INSTALLATION

A6E773863931W02

Caution
- **To prevent the sealant from cracking or the glass from being pushed out by air pressure if a door is closed, open all of the windows and leave them open until the sealant has hardened.**

1. Cut away the old sealant using a razor so that **1—2 mm {0.04—0.07 in}** thickness of sealant remains around the circumference of the frame.

Warning
- **Using a razor with bare hands can cause injury. Always wear gloves when using a razor.**

2. If the sealant has come off completely in any one place, apply some primer after degreasing, and allow it **approximately 30 minutes** to dry. Then put on new sealant to create a **2 mm {0.08 in}** layer.
3. Clean and degrease an **approximately 50.0 mm {1.97 in}** wide strip around the circumference of the glass and the bonding area on the body.
4. Install the molding as shown in the figure.

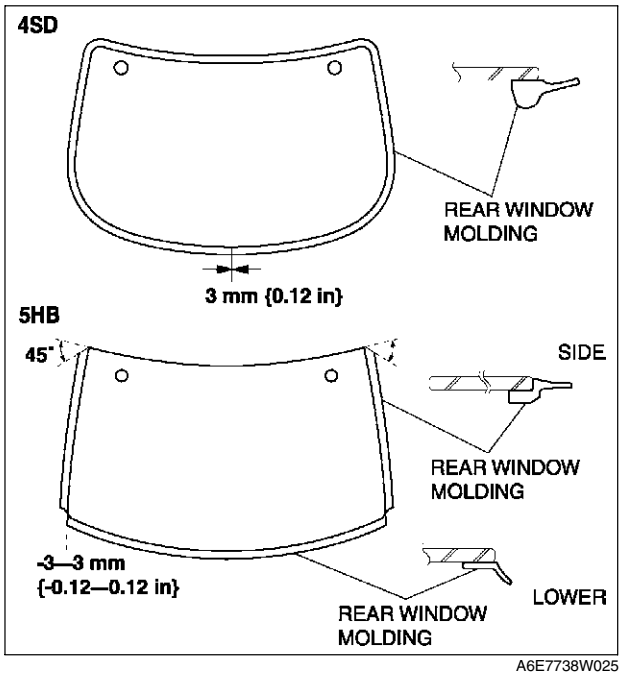

A6E7738W025

5. Use only glass primer on the glass, and body primer on the body and the molding. Allow it to dry for **approximately 30 minutes**.

Caution

- **Keep the area free of dirt and grease, and do not touch the surface or the primer may not properly bond to the surface of the glass and body, which may cause leaks to occur.**

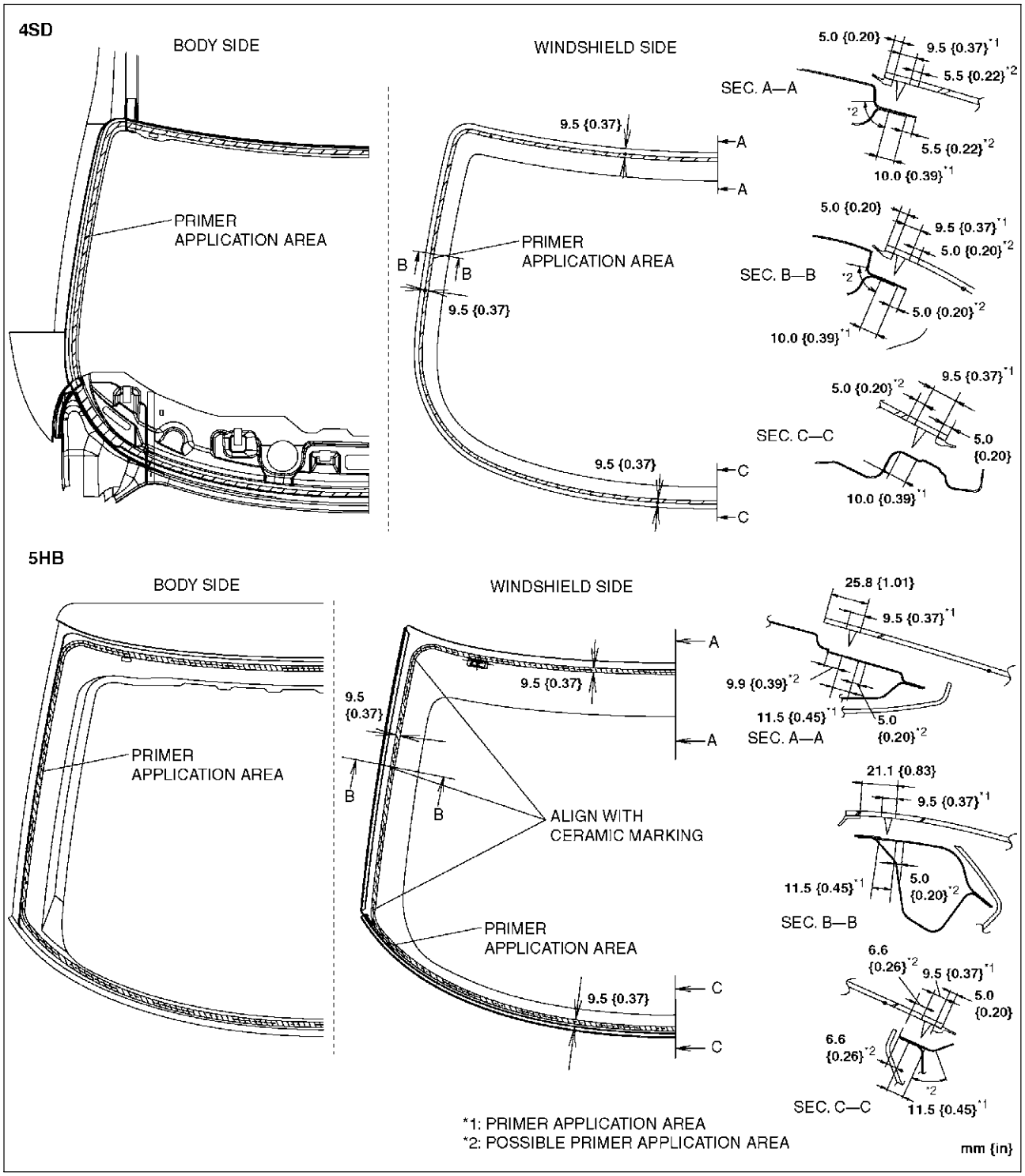

A6E7738W019

S

6. Apply urethane to the area of the glass surface as shown in the figure.

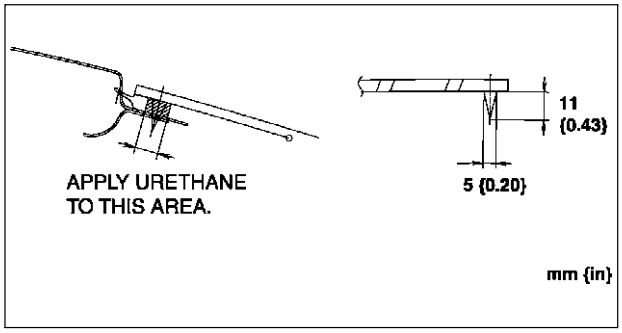

A6E7738W020

7. Set the position of the front windshield glass and insert a pin into the body. Install the glass.

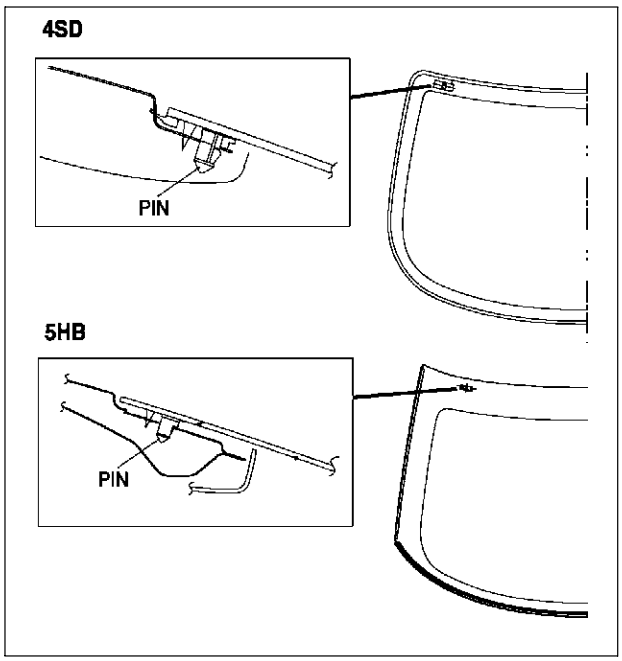

A6E7738W018

8. Verify that the gap of the upper part is **7.3 mm {0.29 in}** and the A pillar part is **6.8 mm {0.27 in}**. (Only for 4SD)

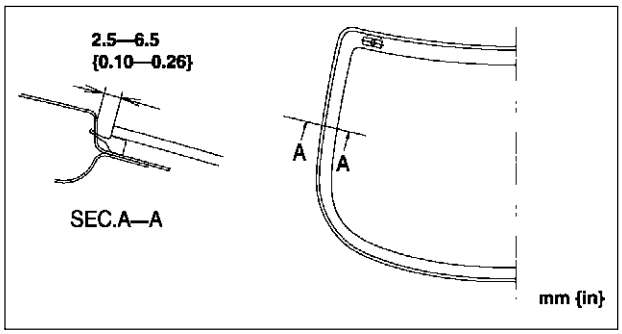

A6E7738W016

9. Keeping the measurement of the molding lip gap within specification, press completely along the perimeter of the glass.
10. For the 4SD, install the following parts:
    (1) Install the headliner.
    (2) Install the rear package trim.
11. For the 5HB, install the following points.
    (1) Install the rear wiper motor.
    (2) Install the liftgate lower trim.
12. Allow the sealant to harden completely.

Sealant hardening time: 24 hours

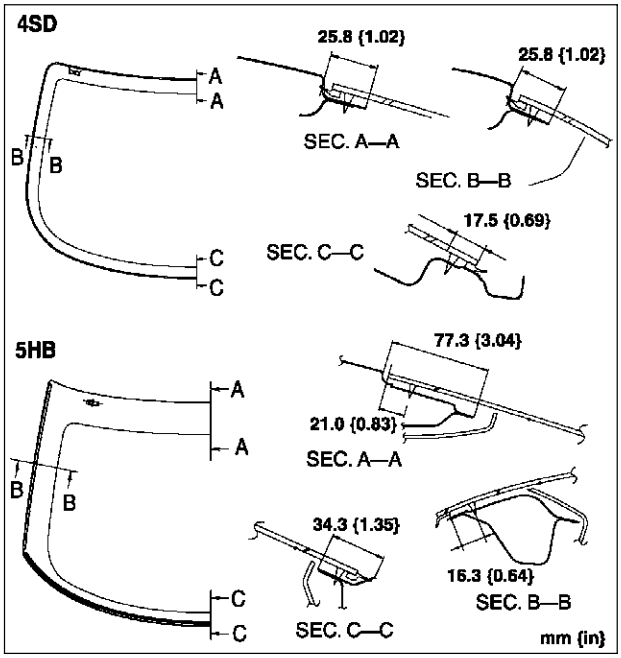

A6E7738W017

S

SLIDING SUNROOF

DEFLECTOR REMOVAL/INSTALLATION

A6E774069880W01

1. Fully open the glass panel.
2. Remove the headliner.
3. Remove the screws.
4. Disengage the hooks.
   (1) Press the rear end of each hook.
   (2) After sliding the hooks rearward, press them upward.
5. Remove the deflector.
6. Install in the reverse order of removal.

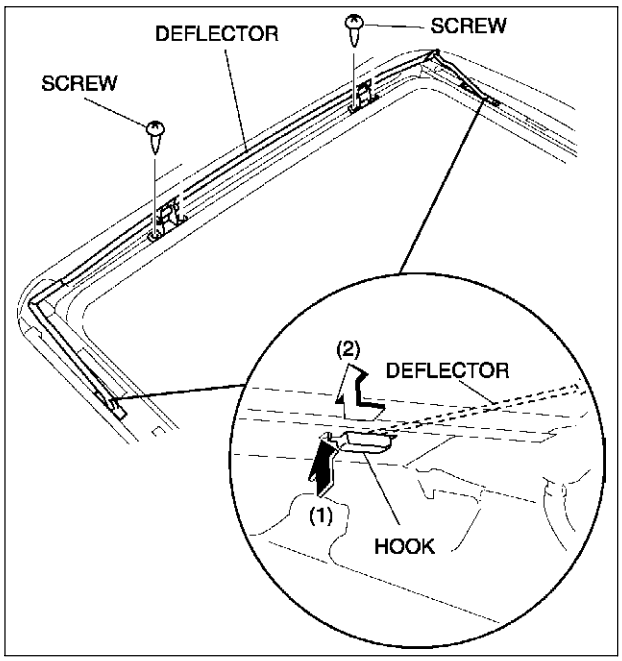

A6E7740W003

GLASS PANEL REMOVAL/INSTALLATION

A6E774069810W01

1. Fully close the glass panel.
2. Fully open the sunshade.
3. Remove the screws, and then remove the glass panel.

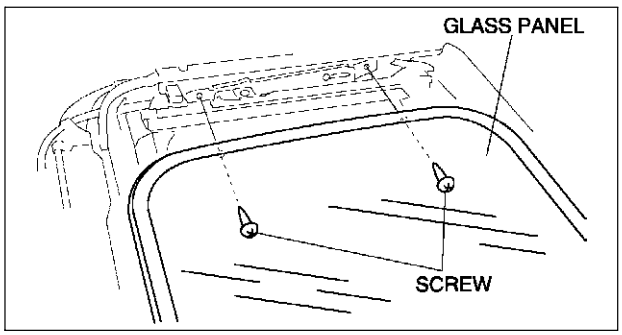

A6E7740W004

4. Peel the weatherstrip off the glass panel.
5. Install in the reverse order of removal.
6. Adjust the glass panel. (See S–75 GLASS PANEL ADJUSTMENT.)

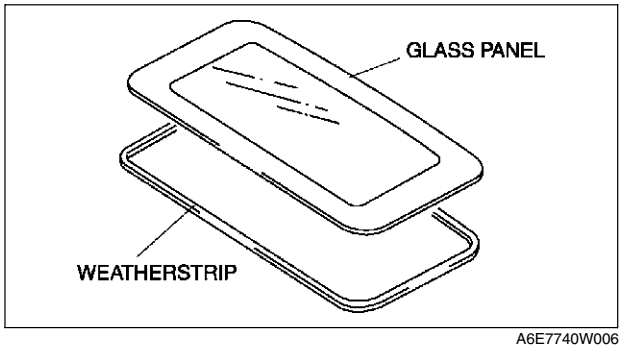

A6E7740W006

GLASS PANEL ADJUSTMENT

A6E774069810W02

1. Fully close the glass panel.
2. Measure the gap and height between the glass panel and body.
3. If not as specified, loosen the glass panel installation screws and reposition the glass panel.

Clearance
a: -0.8—1.2 mm {-0.032—0.047 in}
b: 0 mm {0 in}

4. Tighten the installation screws.
5. Insert a prepaid card between the weatherstrip and the body of the vehicle. Verify that the sunroof is shut tightly (there is resistance when the prepaid card is moved).
   - If the sunroof is not shut tightly, readjust by performing Steps 3 and 4.

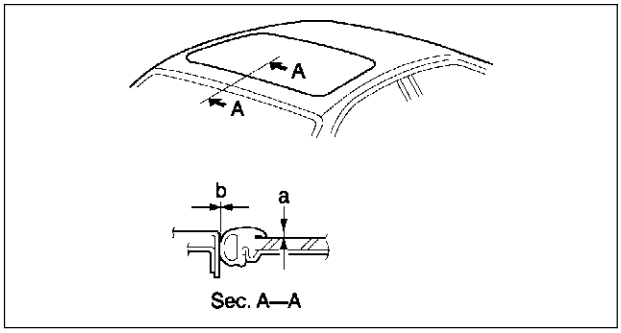

A6E7740W007

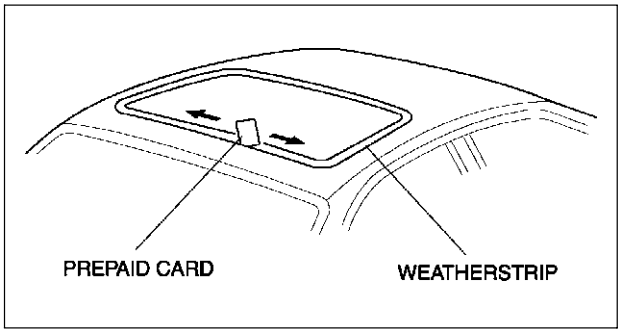

A6E7740W008

S

FRONT DRAIN HOSE REMOVAL

A6E774069920W01

1. Remove the headliner.
2. Disconnect the front drain hose from the sunroof frame.
3. Remove the front drain hose from the clips.
4. Pull the front drain hose into the room side.
5. Remove the front drain hose.

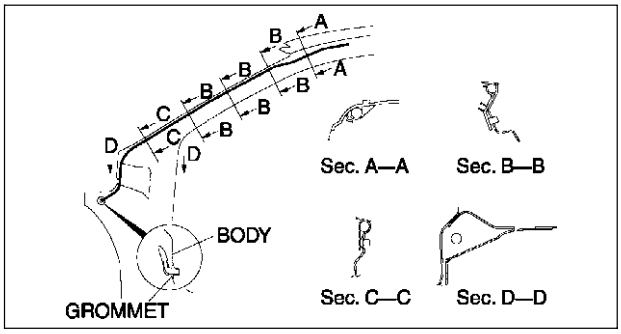

A6E7740W009

FRONT DRAIN HOSE INSTALLATION

A6E774069920W02

Caution
- **If the front drain hose is pinched or bent anywhere, the water in the hose may not discharge and enter the inside of the vehicle. During and after installation of the trims and the headliner, always make sure there is no interference with the front drain hose. Fix any problem if found.**

1. Apply soapy water to the front drain hose inserting area.
2. Insert one end (the wider end) of the front drain hose into the sunroof frame.
3. Install the front drain hose to the clips, parallel to the pillar and free of slack.
4. Insert the front drain hose joint into the hinge pillar inner hole.
5. Install the headliner.

REAR DRAIN HOSE REMOVAL

A6E774069922W01

1. Remove the headliner.
2. Remove the trunk side trim. (4SD)
3. Remove the trunk side upper trim and trunk side trim. (5HB)
4. Disconnect the rear drain hose from the sunroof frame.
5. Remove the rear drain hose from the clips.
6. Pull the rear drain hose into the room side.
7. Remove the rear drain hose.

4SD

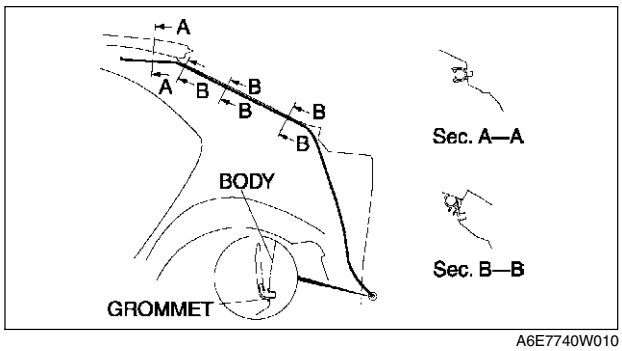

A6E7740W010

5HB

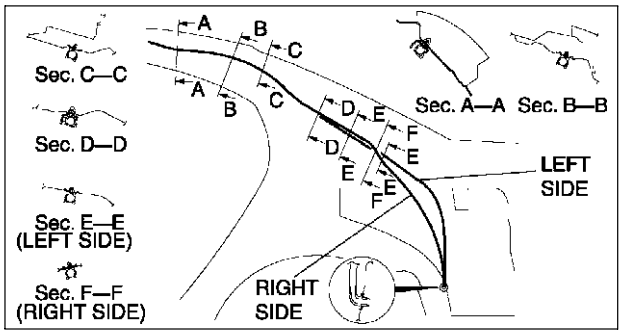

A6E7740W011

REAR DRAIN HOSE INSTALLATION

A6E774069922W02

Caution

- **If the rear drain hose is pinched or bent anywhere, the water in the hose may not discharge and enter the inside of the vehicle. During and after installation of the trims and the headliner, always make sure there is no interference with the rear drain hose. Fix any problem if found.**

1. Apply soapy water to the rear drain hose inserting area.
2. Insert one end (the wider side) of the rear drain hose into the sunroof frame.
3. Install the rear drain hose to the clips parallel to the pillar and free of slack.
4. Insert the rear drain hose joint into the rear pillar inner hole.
5. Install the trunk side trim. (4SD)
6. Install the trunk side upper trim and trunk side trim. (5HB)
7. Install the headliner.

SUNROOF UNIT REMOVAL/INSTALLATION

A6E774069850W01

1. Disconnect the negative battery cable.
2. Remove the headliner.
3. Remove the glass panel.
4. Disconnect the front and rear drain hose from the sunroof frame.
5. Remove the bolt A, and then remove the rear set bracket.

6. Remove the bolt B and nuts, and then remove the sunroof unit.
7. Install in the reverse order of removal.
8. Adjust the glass panel. (See S–75 GLASS PANEL ADJUSTMENT.)

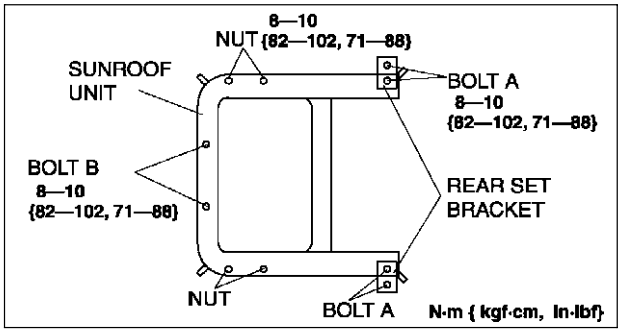

A6E7740W005

SUNROOF UNIT DISASSEMBLY/ASSEMBLY

A6E774069850W02

1. Disconnect the negative battery cable.
2. Remove the deflector.
3. Remove the glass panel.
4. Disassemble in the order indicated in the table.
5. Assemble in the reverse order of disassembly.

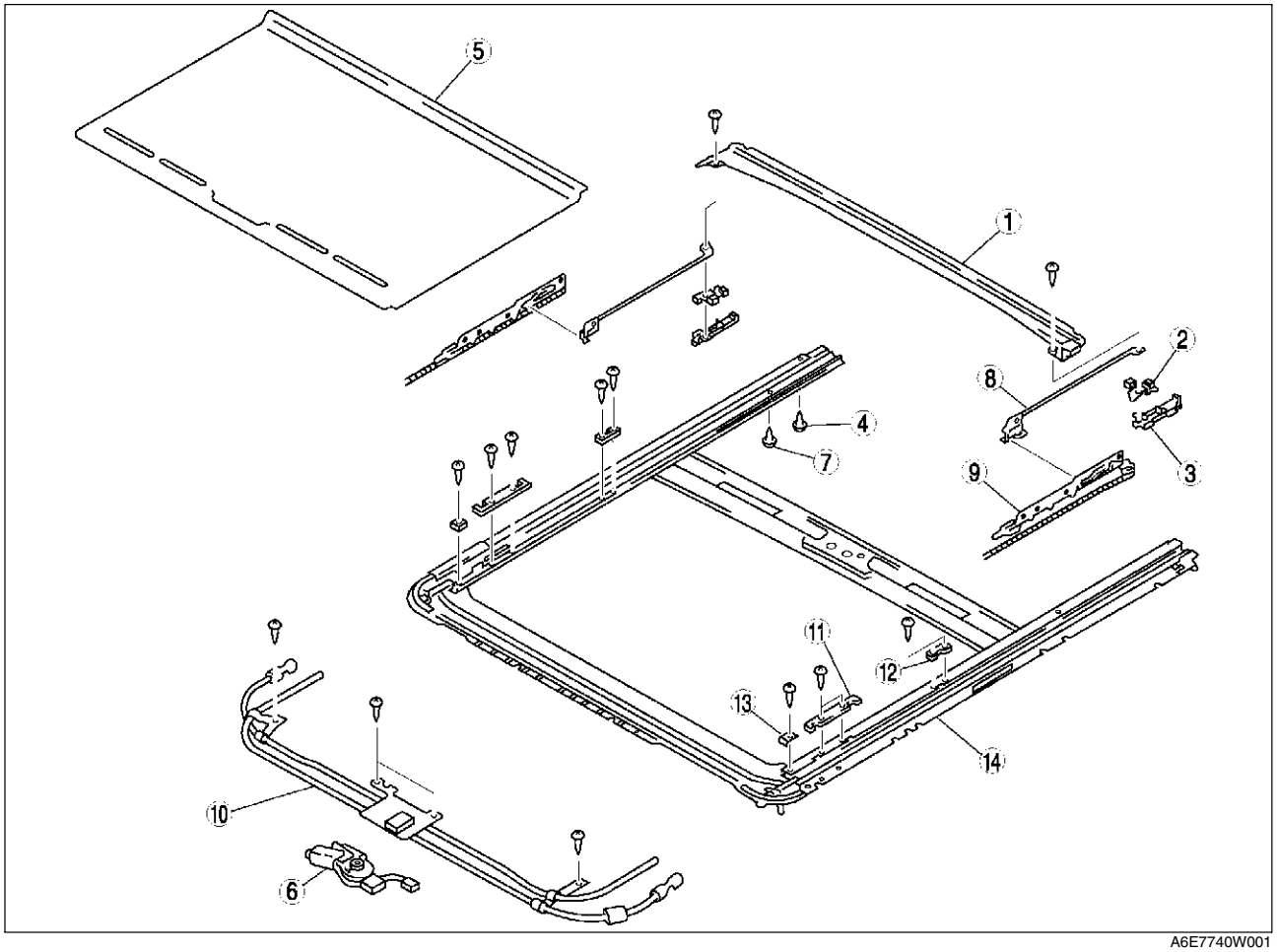

A6E7740W001

1	Drip rail
2	Position plate
3	Slider (See S–78 Slider Disassembly Note)
4	Rear stopper A
5	Sunshade
6	Sunroof motor
7	Rear stopper B
8	Decoration link (See S–78 Decoration Link Assembly Note)

9	Guide (See S–78 Guide Disassembly Note)
10	Drive unit (See S–78 Guide Assembly Note)
11	Set plate A
12	Set plate B
13	Front stopper
14	Frame

Slider Disassembly Note

1. Remove the screw.
2. Slide the slider rearward, and remove it from the sunroof frame.

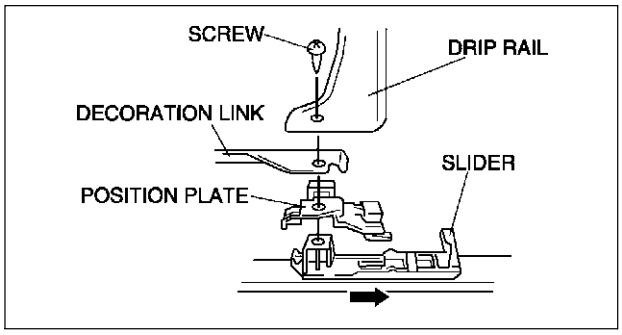

A6E7740W012

Guide Disassembly Note

1. Slide the guide rearward, and remove it from the sunroof frame.

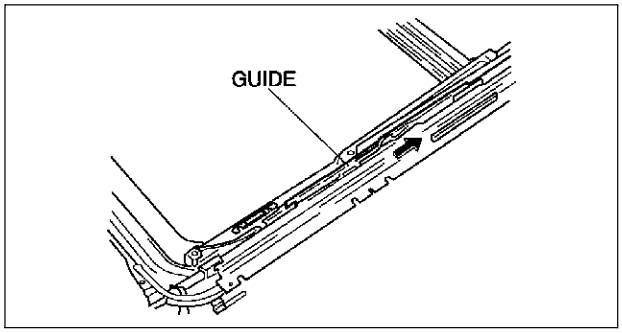

A6E7740W013

Decoration Link Assembly Note

1. Set the pin in the decoration link.

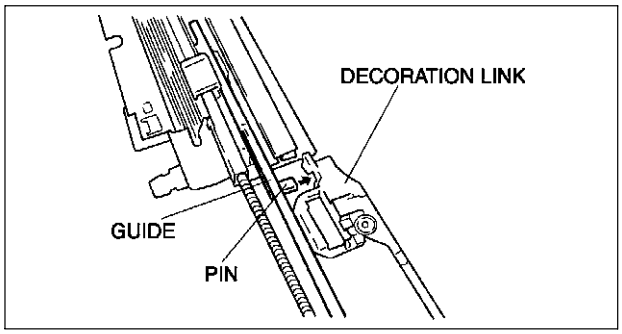

A6E7740W014

Guide Assembly Note

1. Move the guide by hand until it comes to the front stopper.
2. Move the guide by hand until center of pin comes between mark A and B.

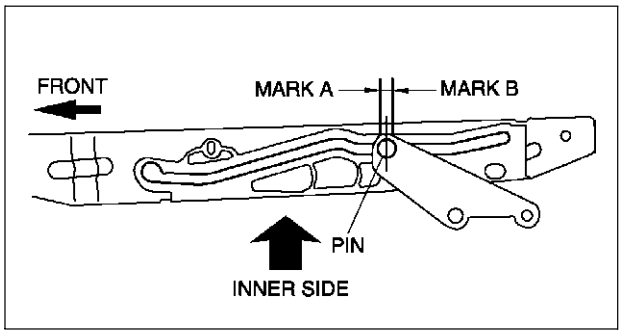

A6E7740W015

SUNROOF MOTOR REMOVAL

A6E774069870W01

1. Disconnect the negative battery cable.
2. Remove the headliner.
3. Disconnect the connector.
4. Remove the screws, and then remove the sunroof motor.

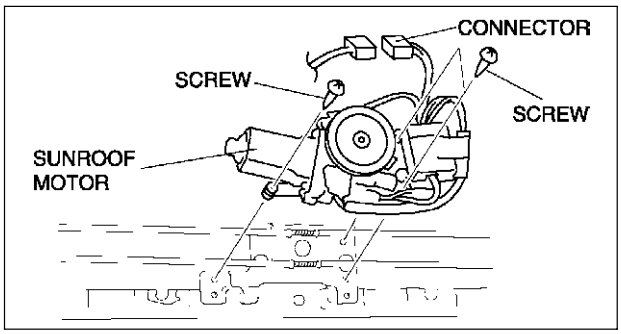

A6E7740W002

SUNROOF MOTOR INSTALLATION

A6E774069870W02

1. Connect the sunroof motor connector.
2. Connect the sunroof switch connector.
3. Connect the negative battery cable.
4. Turn the ignition switch to ON position.
5. Press the CLOSE side of the slide switch until the sunroof motor stops.
6. Disconnect the sunroof switch connector.
7. Install the screws, and then install the sunroof motor.
8. Install the headliner.

SUNROOF MOTOR INSPECTION

A6E774069870W03

Motor

1. Remove the sunroof motor.
2. Apply battery positive voltage to the sunroof motor terminals and inspect the operation of the sunroof motor.
   - If not as specified, replace the sunroof motor.

Connection		Motor operation
2A	2B	
B+	GND	Turn left (Slide close/Tilt up)
GND	B+	Turn right (Slide open/Tilt down)

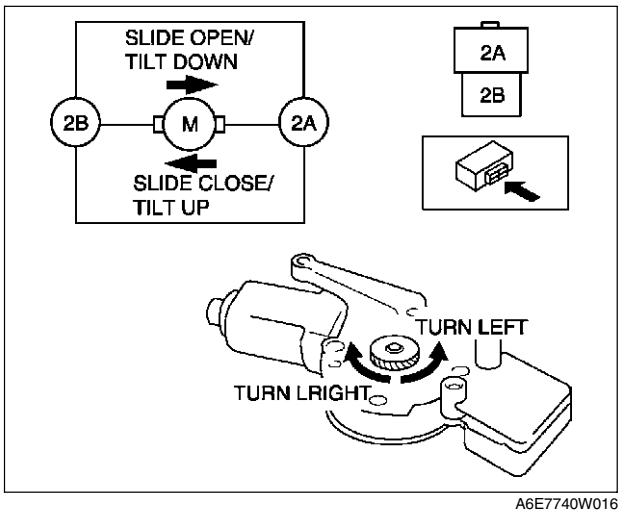

A6E7740W016

S

Limit Switch

1. Remove the headliner. (See S–96 HEADLINER REMOVAL/INSTALLATION.)
2. Verify the glass panel position.
3. Disconnect the connector.
4. Inspect for continuity between the sunroof motor terminals using an ohmmeter.
   - If not as specified, replace the sunroof motor.

○—○ : Continuity

Glass panel position	Terminal						
	1A	1D	1F	1H	GND	2A	2B
Fully open			○		○		○
Fully closed	○	○		○			○
Fully tilt up				○		○	○

A6E7740W021

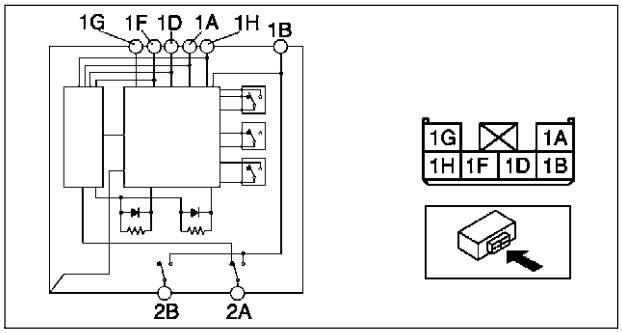

A6E7740W020

SUNROOF RELAY INSPECTION

A6E774069873W01

Note
- Sunroof relay is built in the sunroof motor.

1. Remove the headliner. (See S–96 HEADLINER REMOVAL/INSTALLATION.)
2. Connect the sunroof switch connector.
3. Measure the voltage at the sunroof relay terminals as indicated below.
4. Disconnect the sunroof relay connector before inspecting for continuity at terminal 1G.
   - If not as specified, inspect the parts listed under “Action” and the related wiring harnesses.
   - If the parts and wiring harnesses are okay but the system still does not work properly, replace the sunroof relay.
5. Connect the negative battery cable.

Terminal voltage list (Reference)

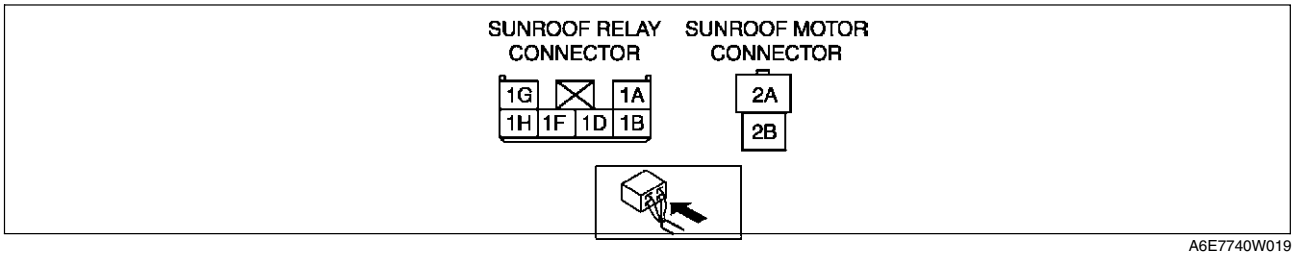

A6E7740W019

Terminal	Signal	Connected to	Test condition	Voltage (V)/ Continuity	Action
1A	Tilt down	Sunroof switch	Sunroof is tilting down. (Not including position when fully closed)	0	• Inspect sunroof switch (See S–81 SUNROOF SWITCH INSPECTION) • Inspect related harness
			Other	B+	
1B	IG2	Sunroof motor	Ignition switch is at ON position.	B+	• Inspect A/C 15 A fuse • Inspect sunroof switch (See S–81 SUNROOF SWITCH INSPECTION) • Inspect related harness
			Other	0	
1C	—	—	—	—	—
1D	Slide close	Sunroof switch	Sunroof is closing. (Including position when fully closed and open)	0	• Inspect sunroof switch (See S–81 SUNROOF SWITCH INSPECTION) • Inspect related harness
			Other	B+	
1E	—	—	—	—	—

Terminal	Signal	Connected to	Test condition	Voltage (V)/ Continuity	Action
1F	Slide open	Sunroof switch	Sunroof is fully opening.	0	• Inspect sunroof switch (See S–81 SUNROOF SWITCH INSPECTION) • Inspect related harness
			Other	B+	
1G	Sunroof relay ground	GND	Under any condition: inspect for continuity to ground.	Yes	• Inspect related harness
1H	Tilt up	Sunroof switch	Sunroof is tilting up. (Including position when fully closed)	0	• Inspect sunroof switch (See S–81 SUNROOF SWITCH INSPECTION) • Inspect related harness
			Other	B+	
2A	Slide close/ tilt up	Sunroof motor	Sunroof is opening/tilting down.	0	• Inspect sunroof switch (See S–81 SUNROOF SWITCH INSPECTION) • Inspect sunroof motor (See S–79 SUNROOF MOTOR INSPECTION) • Inspect related harness
			Sunroof is closing/tilting up.	B+	
			Other	0	
2B	Slide open/tilt down	Sunroof motor	Sunroof is opening/tilting down.	B+	• Inspect sunroof switch (See S–81 SUNROOF SWITCH INSPECTION) • Inspect sunroof motor (See S–79 SUNROOF MOTOR INSPECTION) • Inspect related harness
			Sunroof is closing/tilting up.	0	
			Other	0	

SUNROOF SWITCH REMOVAL/INSTALLATION

A6E774066560W01

Note
- The sunroof switch is together with the map light.

1. Disconnect the negative battery cable.
2. Remove the map light from the headliner.
3. Install in the reverse order of removal.

SUNROOF SWITCH INSPECTION

A6E774066560W02

1. Remove the sunroof switch.
2. Inspect for continuity between the sunroof switch terminals using an ohmmeter.
   - If not as specified, replace the sunroof switch.

○—○ : Continuity

Switch position	Terminal						
	1A	1D	1F	1G	1H	1B	2D
Slide open			○—○			○—○	
Slide closed		○		○		○—○	
Tilt up				○—○		○—○	
Tilt down	○			○		○—○	
Off						○—○	

A6E7740W022

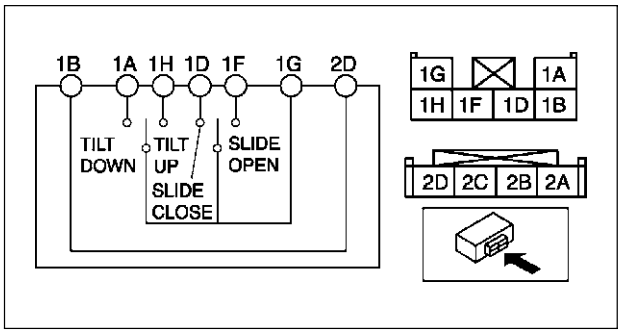

A6E7740W023

DASHBOARD AND CONSOLE

DASHBOARD REMOVAL/INSTALLATION

A6E774255100W01

1. Disconnect the negative battery cable.
2. Remove the glove compartment.
3. Remove the console.
4. Remove the meter hood.
5. Remove the instrument cluster.
6. Remove the column cover.
7. Remove the lower panel.
8. Remove the steering shaft.
9. Remove the A-pillar trims.
10. Remove the front scuff plates.
11. Remove the front side trims.
12. Remove the side panels.
13. For vehicles equipped with the wire-type climate control unit, disconnect the wires for the front A/C unit. (See to U–44 CLIMATE CONTROL UNIT REMOVAL.) (See to U–45 CLIMATE CONTROL UNIT INSTALLATION.)
14. Disconnect the dashboard harness connectors.
15. Remove the bolts.

Warning

- **Removing the dashboard without supporting it can be dangerous. The dashboard may fall and injure you. Always perform these procedures together with at least another person.**

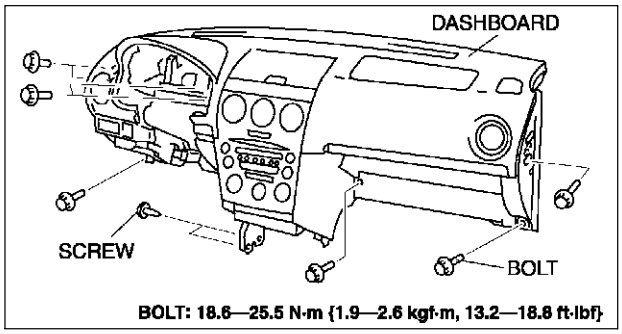

A6E7742W004

16. Pull out the support pins from the body to remove the dashboard.
17. Take the dashboard off from the driver-side door opening.
18. Install in the reverse order of removal.

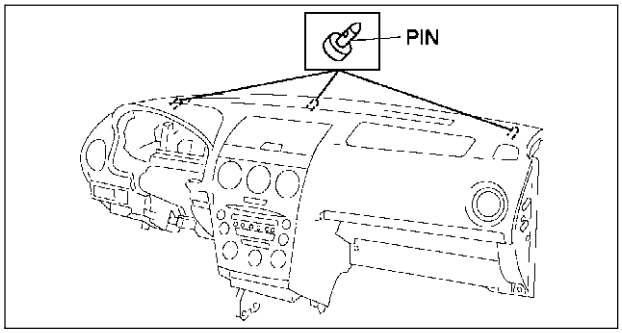

A6E7742W005

DASHBOARD DISASSEMBLY/ASSEMBLY

A6E774255100W02

1. Remove the passenger-side air bag module.
2. Remove the ventilator grilles.
3. Remove the audio unit.
4. Remove the climate control unit.
5. Disassemble in the order indicated in the table.
6. Assemble in the reverse order of disassembly.

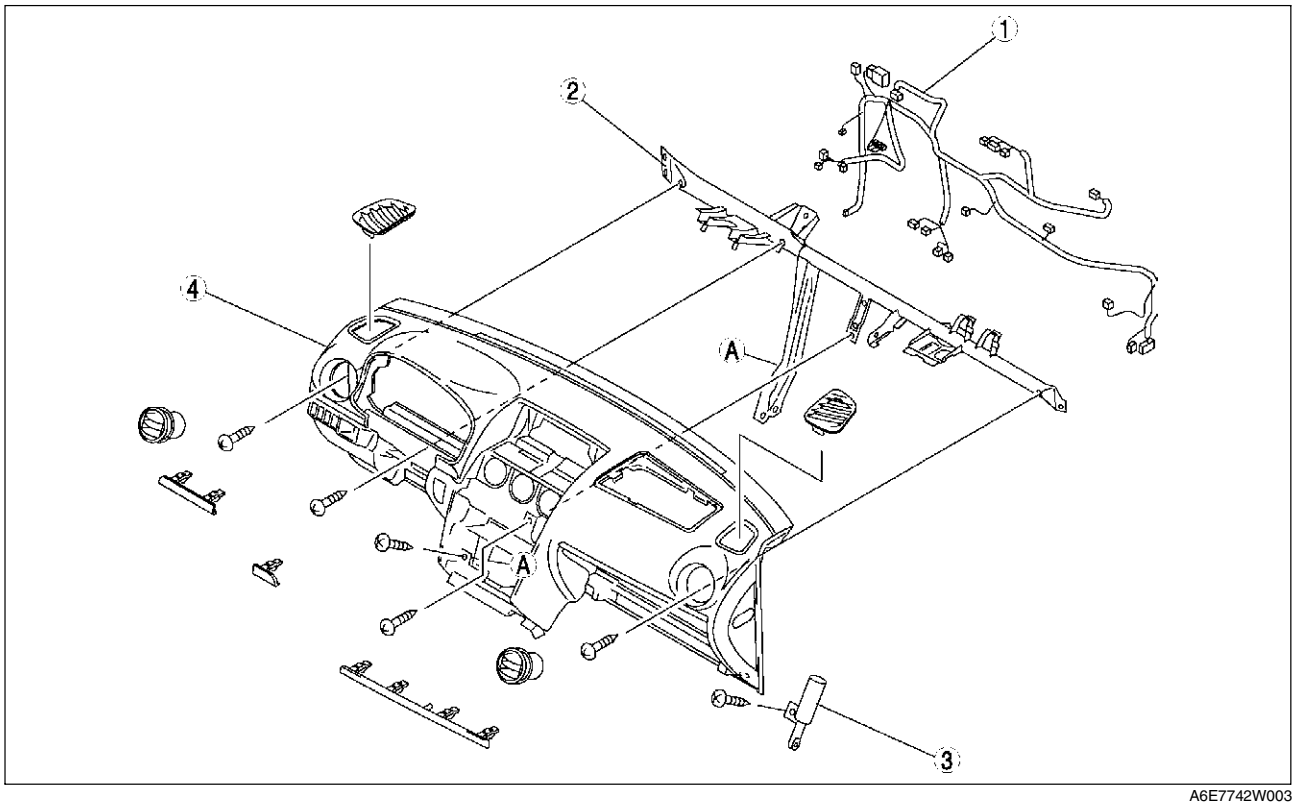

A6E7742W003

1	Dashboard harness
2	Dashboard member

3	Damper
4	Dashboard

SIDE PANEL REMOVAL/INSTALLATION

1. Disengage clips using a tape-wrapped flathead screwdriver.
2. Pull the side panel toward you, then disengage tabs from dashboard, and remove the side panel.
3. Install in the reverse order of removal.

A6E774264960W01

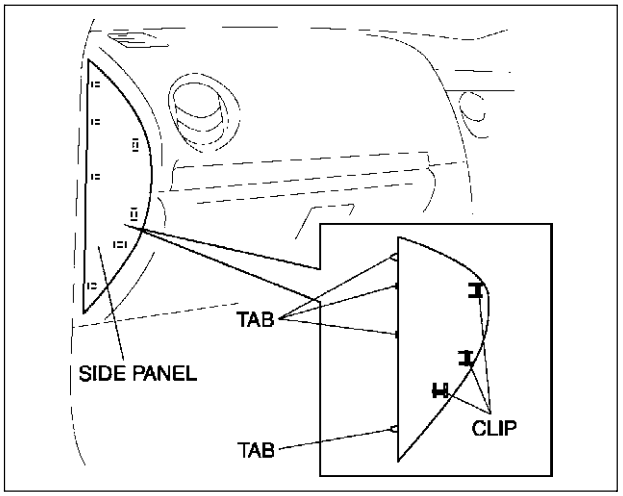

A6E7742W010

COLUMN COVER REMOVAL/INSTALLATION

1. Detach the fit of the upper column cover from the meter hood rubber.
2. Remove the upper column cover.
3. Remove the ignition key illumination.
4. Remove the screws.
5. Remove the lower column cover.
6. Install in the reverse order of removal.

A6E774260200W01

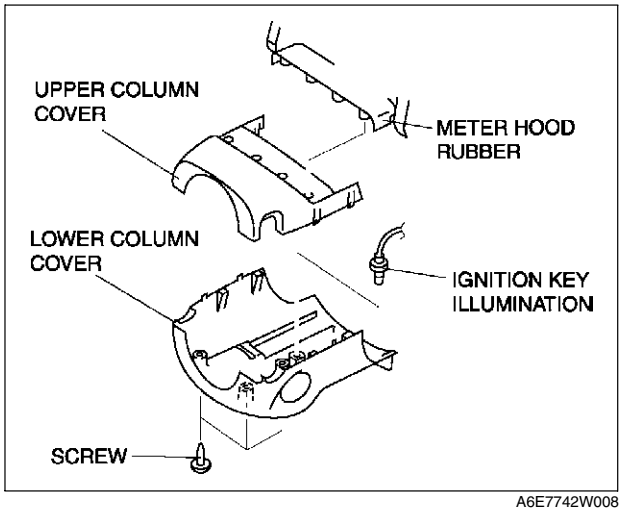

A6E7742W008

METER HOOD REMOVAL/INSTALLATION

1. Remove the screws.
2. Pull the meter hood toward you, then detach the column cover.
3. Install in the reverse order of removal.

A6E774255420W01

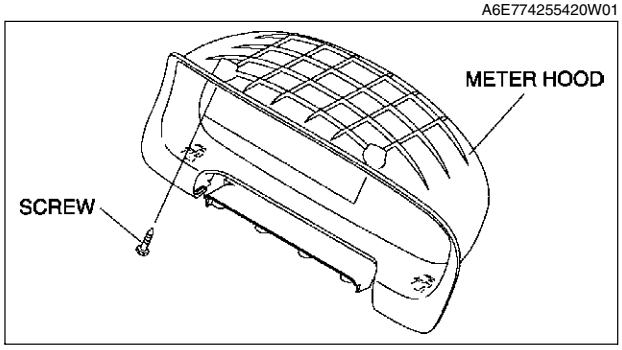

A6E7742W002

LOWER PANEL REMOVAL/INSTALLATION

1. Remove the bonnet release lever.
2. Remove the screws.
3. Pull the lower panel toward you, then disengage clips A and tabs B from the dashboard, and remove the lower panel.
4. Install in the reverse order of removal.

A6E774264280W01

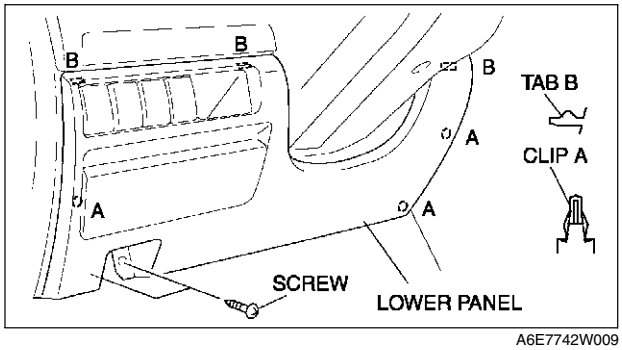

A6E7742W009

CENTER BOX REMOVAL/INSTALLATION

A6E774264030W01

1. Disconnect the negative battery cable.
2. Remove the center panel module.
3. Remove the screws.
4. Pull the center box forward, then disengage the tabs
5. Disconnect the LDC unit connector.
6. Install in the reverse order of removal.

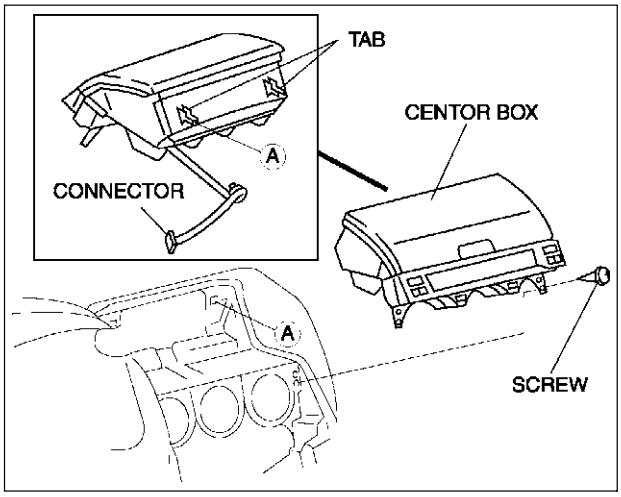

A6E7742W012

GLOVE COMPARTMENT REMOVAL/INSTALLATION

A6E774264030W02

1. Pull the stay damper to the direction shown in the figure. Then detach the fit for the glove compartment from the stay damper.

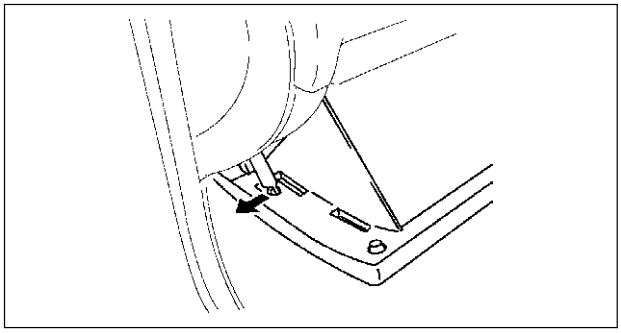

A6E7742W006

2. Bend the stoppers inward to remove.
3. Turn the glove compartment downward and pull the clips to remove it.
4. Install in the reverse order of removal.

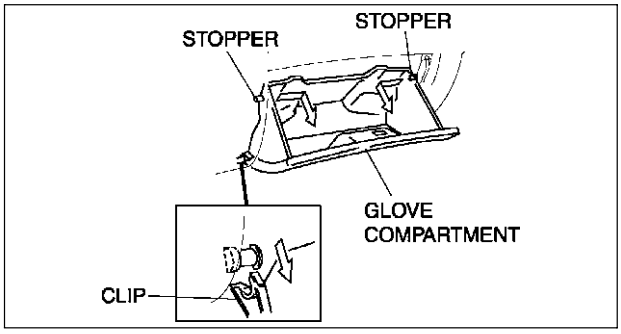

A6E7742W007

S

CONSOLE REMOVAL/INSTALLATION

A6E774264270W01

1. For MT vehicle, remove the shift lever knob.
2. Remove the cup holder panel using a tape-wrapped screwdriver.
3. Remove the boot panel using a tape-wrapped screwdriver, disconnect the cigarette lighter connector, and remove the front ashtray illumination.
4. Remove the bolts.
5. Install in the reverse order of removal.

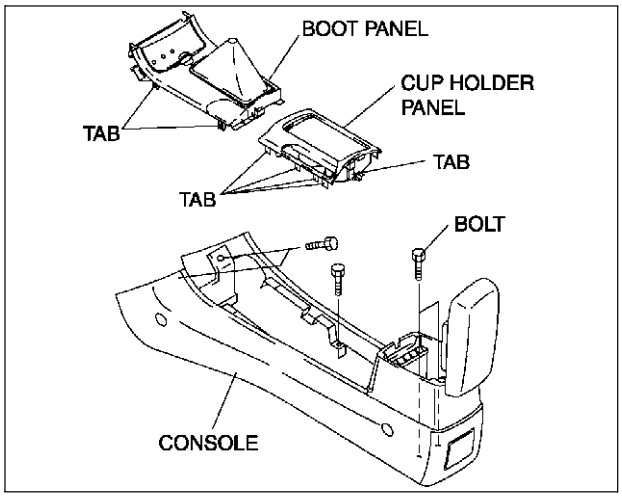

A6E7742W011

CONSOLE DISASSEMBLY/ASSEMBLY

A6E774264270W02

1. Disassemble in the order indicated in the table.

1	Console lid (only large console box)
2	Box
3	Rear ashtray case
4	Bracket
5	Console
6	Console cover
7	Box storage
8	Lock No.1
9	Inner console lid
10	Lid core
11	Lock No.2
12	Hinge
13	Outer console lid
14	Front ashtray
15	Boot
16	Boot panel
17	Cup holder
18	Cup holder panel

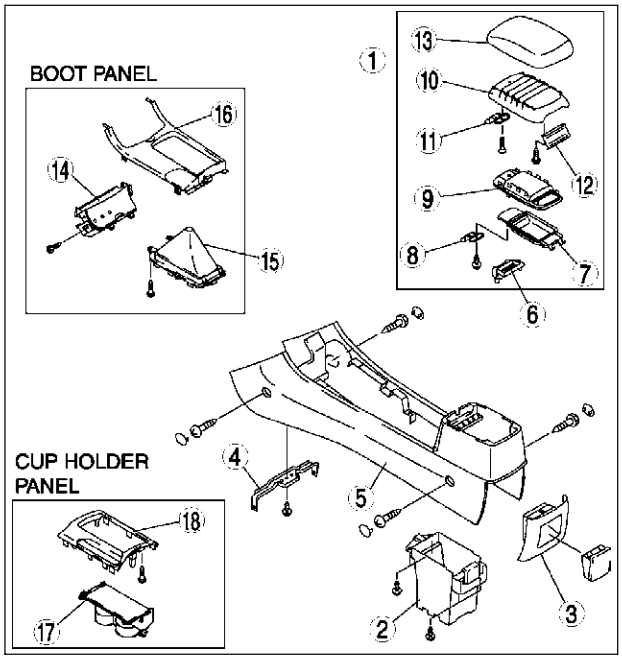

A6E7742W001

2. Assemble in the reverse order of disassembly.

TRIM

A-PILLAR TRIM REMOVAL

A6E774468160W01

1. Turn the seaming welt over.
2. Disengage clips A using a fastener remover.
3. Pull the A-pillar trim, then disengage clip B (1).
4. Pull the A-pillar trim upward, then disengage clip B from the A-pillar trim (2).

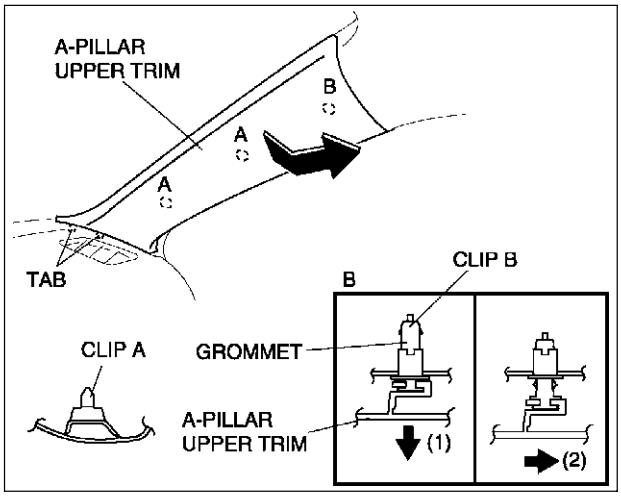

A6E7744W023

5. Pull clip B out, then rotate 45° .
6. Remove clip B from the grommet by pulling it toward you.

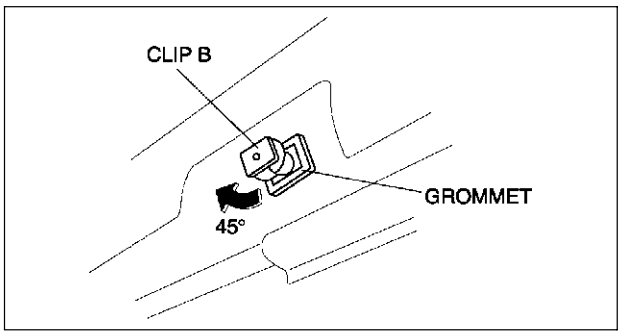

A6E7744W024

A-PILLAR TRIM INSTALLATION

A6E774468160W02

1. Cut A-pillar trim tab A to the same length as tab B.
2. Install clip B to the A-pillar trim.
3. Install the A-pillar trim by tapping the clip into the body.

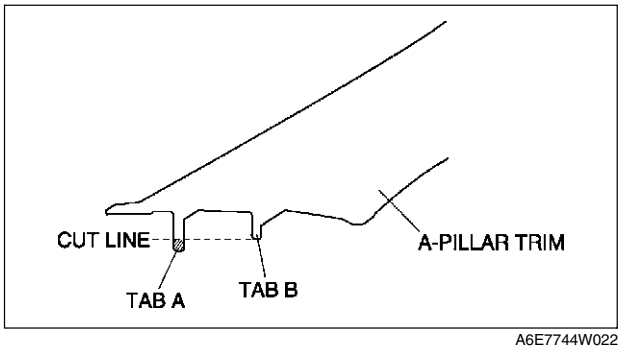

A6E7744W022

S

B-PILLAR LOWER TRIM REMOVAL/INSTALLATION

A6E774468220W01

1. Remove the front scuff plate.
2. Remove the rear scuff plate.
3. Pull the area marked A, then remove one side of the B-pillar lower trim.
4. Pull the B-pillar lower trim, then remove the pin from the body.
5. Remove the B-pillar lower trim.
6. Install in the reverse order of removal.

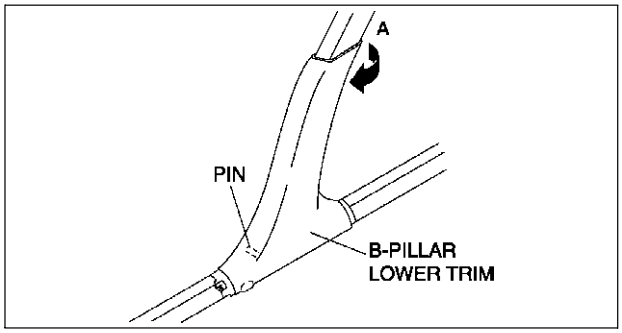

A6E7744W021

B-PILLAR UPPER TRIM REMOVAL/INSTALLATION

A6E774468210W01

1. Remove the upper anchor of the front seat belt.
2. Remove the B-pillar lower trim.
3. Turn the seaming welt over.
4. Pull the B-pillar upper trim toward you, then disengage, clip B, and pin C from the body.
5. Disengage hook A from the body, then remove B-pillar upper trim.
6. Install in the reverse order of removal.

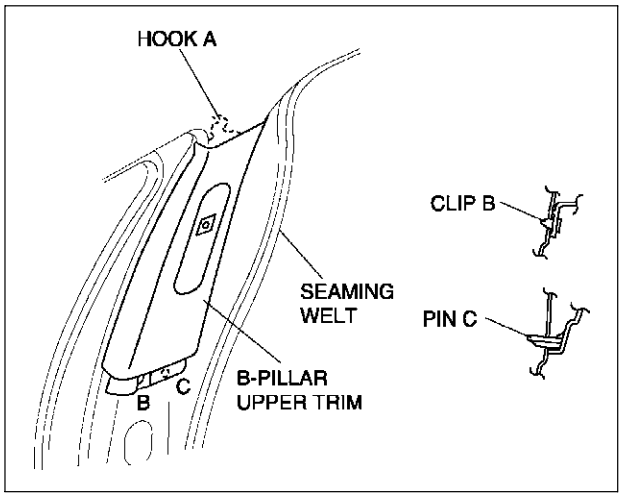

A6E7744W025

FRONT SIDE TRIM REMOVAL/INSTALLATION

A6E774468370W01

1. Remove the front scuff plate.
2. Turn the seaming welt over.
3. Pull the front side trim toward you, then disengage clip A and the stud bolt, then remove the front side trim.
4. Install in the reverse order of removal.

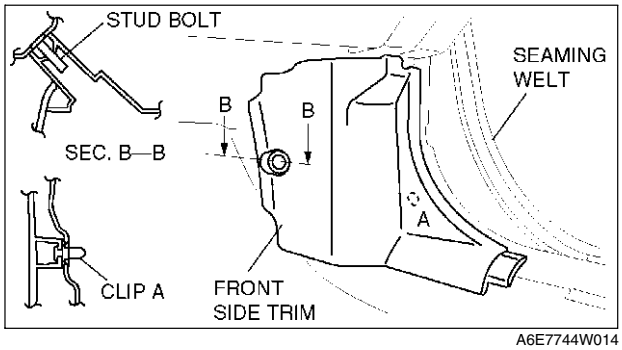

A6E7744W014

FRONT SCUFF PLATE REMOVAL/INSTALLATION

1. Pull the front scuff plate upward, then disengage clips B, pins C, D and hooks E from the body, and remove the front scuff plate.
2. Install in the reverse order of removal.

A6E774468710W01

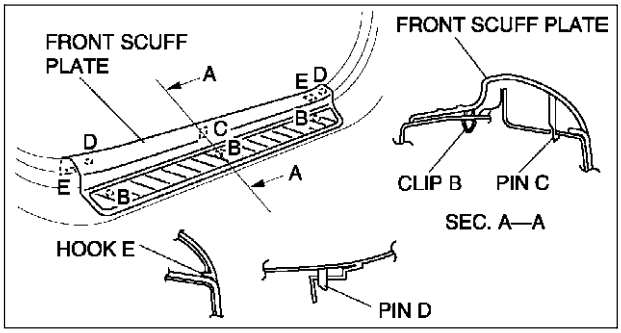

A6E7744W017

REAR SCUFF PLATE REMOVAL/INSTALLATION

1. Pull the rear scuff plate upward, then disengage clips A, pin B, and hooks C from the body, and remove the rear scuff plate.
2. Install in the reverse order of removal.

A6E774468730W01

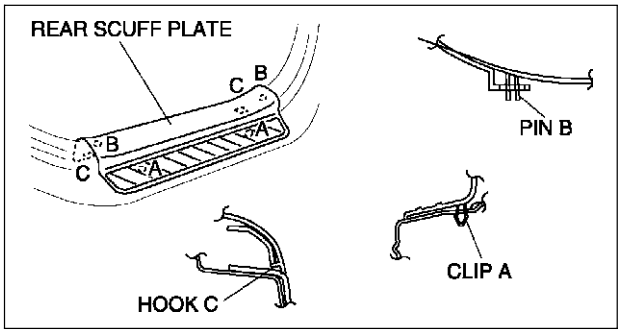

A6E7744W018

C-PILLAR TRIM REMOVAL/INSTALLATION

A6E774468240W01

S

4SD

1. Remove the tire house trim.
2. Turn the seaming welt over.
3. Remove the cap using a fastener remover, and remove the bolt (with curtain air bag system).
4. Disengage clips A and clip B using a fastener remover.
5. Pull the C-pillar trim forward, then disengage hook C from the body, and remove the C-pillar trim.
6. Install in the reverse order of removal.

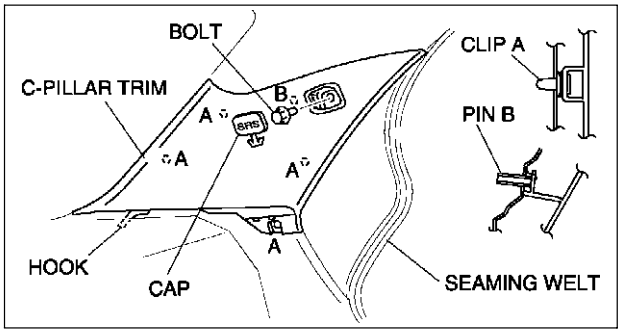

A6E7744W019

5HB

1. Remove the tire house trim.
2. Remove the trunk side upper trim
3. Turn the seaming welt over.
4. Remove the cap using a fastener remover the bolt. (with curtain air bag system)
5. Disengage clips A and pin B using a fastener remover.
6. Pull the C-pillar trim forward, then disengage the hook from the body.
7. Remove the rear center seat belt tongue from the C-pillar trim. (LH only)
8. Remove the C-pillar trim.
9. Install in the reverse order of removal.

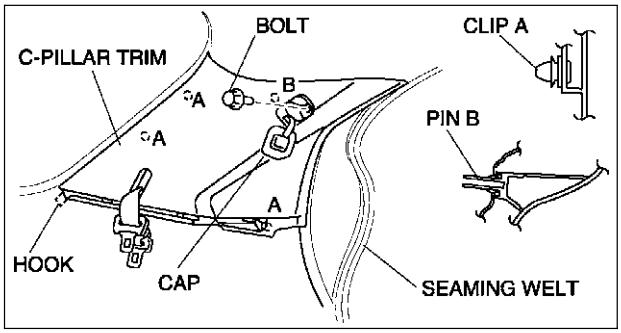

A6E7744W020

FRONT DOOR TRIM REMOVAL/INSTALLATION

A6E774468420W01

1. Disconnect the negative battery cable.
2. Open the cap using a small screwdriver, then remove the screw.
3. Remove the inner handle cover.
4. Remove the inner garnish.

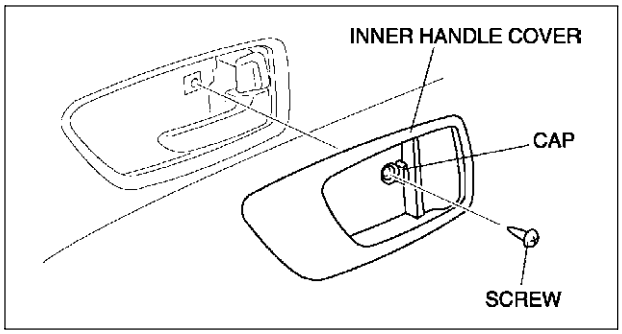

A6E7744W009

5. Remove the cover, then remove screw A.
6. Remove the lens cover, then remove screw B.
7. Disengage clips A from the front door using a fastener remover.
8. Pull the front door trim upward, then disengage hooks B from the front door.
9. Disconnect the power door mirror switch connector and the power window main switch connector (driver's side) or power window subswitch connector (passenger's side).
10. Remove the courtesy light.
11. Remove the front door trim.
12. Remove the switch panel from the front door trim.
13. Install in the reverse order of removal.

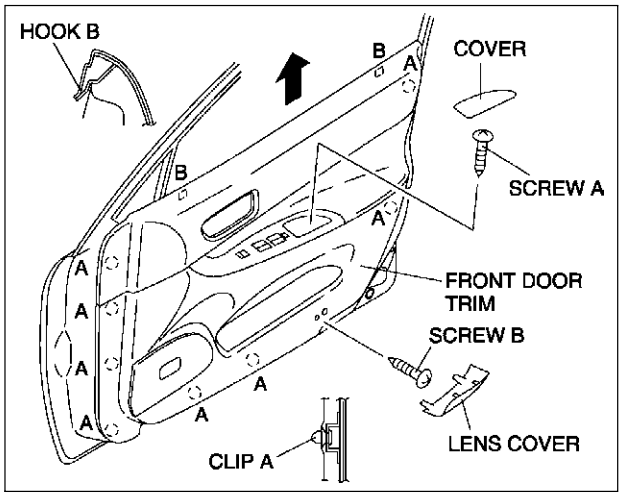

A6E7744W010

REAR DOOR TRIM REMOVAL/INSTALLATION

A6E774468520W01

1. Disconnect the negative battery cable if equipped with power window system.
2. Remove the regulator handle if equipped.
3. Open the cap using a small screwdriver, then remove the screw.
4. Remove the inner handle cover.
5. Remove the cover, then remove screw.
6. Disengage clips A from the rear door using a fastener remover.

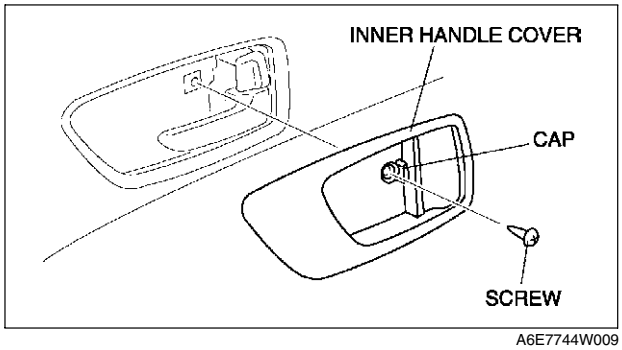

A6E7744W009

7. Pull the rear door trim upward, then disengage hooks B from the rear door.
8. Disconnect the power window subswitch connector if equipped.
9. Remove the rear door trim.
10. Remove the switch panel from the rear door trim.
11. Install in the reverse order of removal.

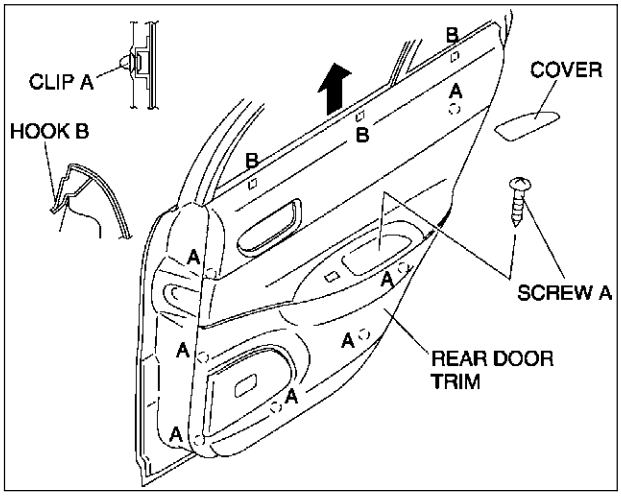

A6E7744W011

TIRE HOUSE TRIM REMOVAL/INSTALLATION

A6E774468760W01

4SD

1. Remove the rear scuff plate.
2. Remove the rear seat side.
3. Remove the fastener.
4. Pull the tire house trim upward, then disengage clips A from the body, and remove the tire house trim.
5. Install in the reverse order of removal.

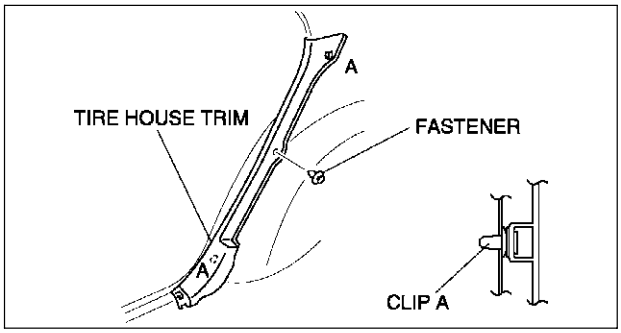

A6E7744W015

5HB

1. Remove the rear scuff plate.
2. Pull the tire house trim toward you, then disengage clip B from the body and clip A, hooks C, D from the trunk side trim.
3. Remove the tire house trim.
4. Install in the reverse order of removal.

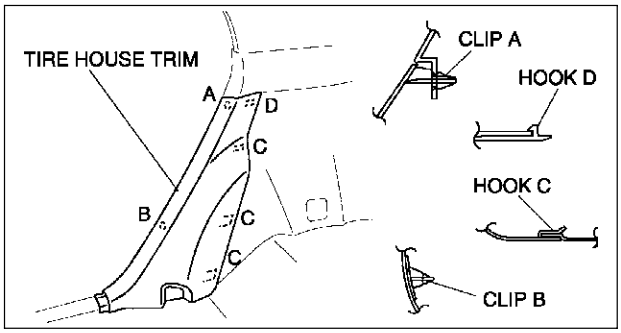

A6E7744W016

S

REAR PACKAGE TRIM REMOVAL/INSTALLATION

A6E774468320W01

1. Remove the high-mount brake light.
2. Fold the rear seat back.
3. Remove the fasteners.
4. Pull the rear package trim upward, then disengage the clips from the body.
5. Disengage the hooks, then remove the rear package trim.
6. Install in the reverse order of removal.

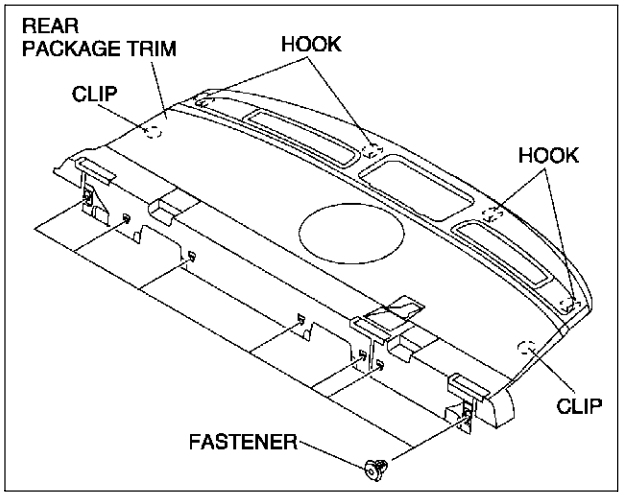

A6E7744W026

TRUNK SIDE TRIM REMOVAL/INSTALLATION

A6E774468860W01

4SD

1. Remove the trunk end trim.
2. Remove the fasteners, then remove the trunk side trim.
3. Install in the reverse order of removal.

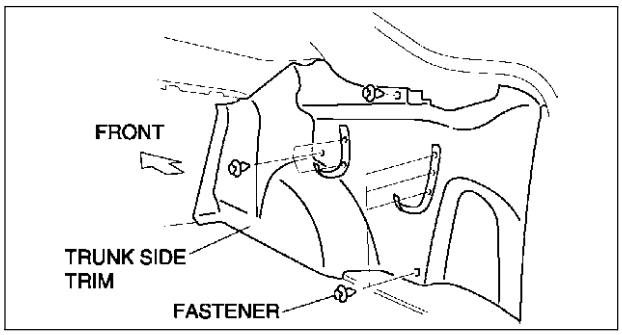

A6E7744W007

5HB

1. Remove the trunk end trim.
2. Remove the trunk side upper trim.
3. Remove the cargo hooks.
4. Remove the fasteners.
5. Pull the trunk side trim toward you, then disengage clips A from the body.
6. Install in the reverse order of removal.

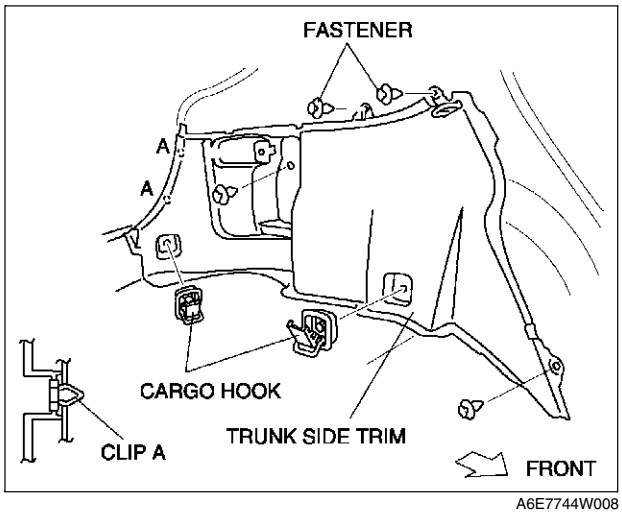

A6E7744W008

TRUNK SIDE UPPER TRIM REMOVAL/INSTALLATION

A6E774468860W02

1. Disconnect the negative battery cable. (LH only)
2. Remove the tire house trim.
3. Remove the rear seat remote lever.
4. Remove the screw.
5. Pull the trunk side upper trim toward you, then disengage clips A from the body.
6. Disconnect the cargo compartment light connector. (LH only)
7. Install in the reverse order of removal.

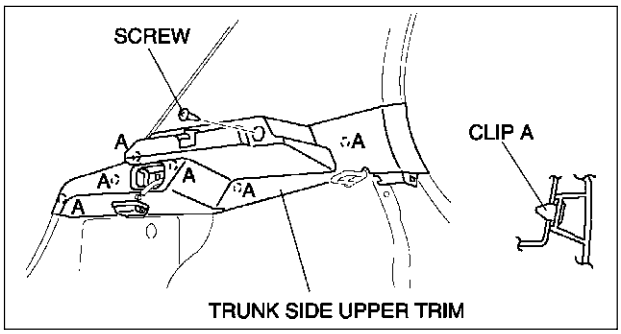

A6E7744W006

TRUNK LID TRIM REMOVAL/INSTALLATION

A6E774458800W01

1. Pull the handle toward you, then remove the handle.
2. Remove the fasteners, then remove the trunk lid trim.
3. Install in the reverse order of removal.

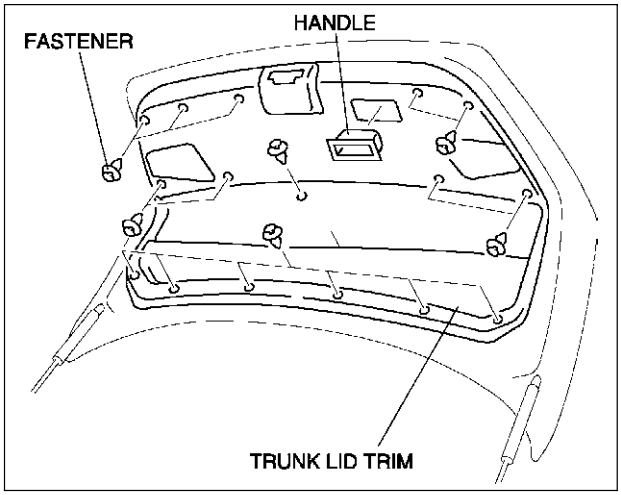

A6E7744W005

S

TRUNK END TRIM REMOVAL/INSTALLATION

A6E774468890W01

4SD

1. Remove the fasteners.
2. Pull the trunk end trim upward, then disengage clips A, pins B, and hooks.
3. Remove the trunk end trim.
4. Install in the reverse order of removal.

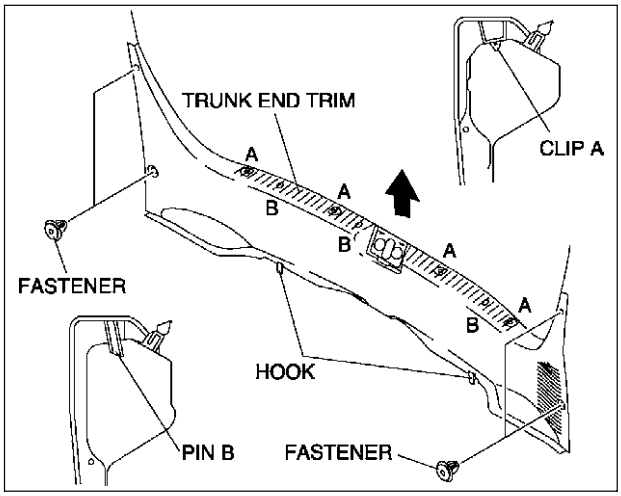

A6E7744W012

5HB

1. Pull the trunk end trim upward, then disengage clips A, pins B, and hooks.
2. Remove the trunk end trim.
3. Install in the reverse order of removal.

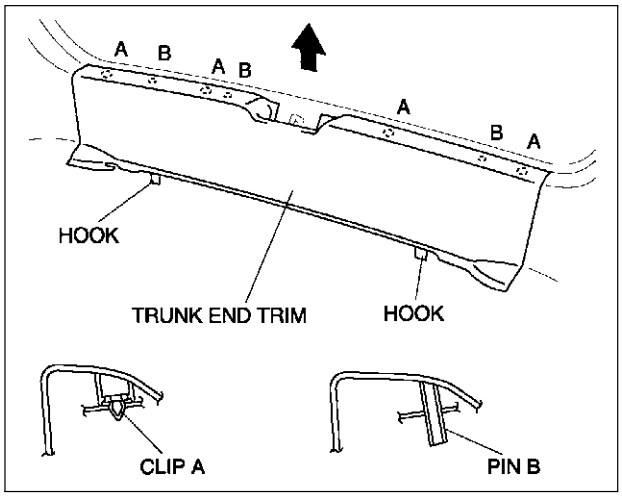

A6E7744W013

LIFTGATE UPPER TRIM REMOVAL/INSTALLATION

A6E774468930W01

1. Pull the liftgate upper trim toward you, then disengage clips A, and pin B from the body.
2. Remove the liftgate upper trim.
3. Install in the reverse order of removal.

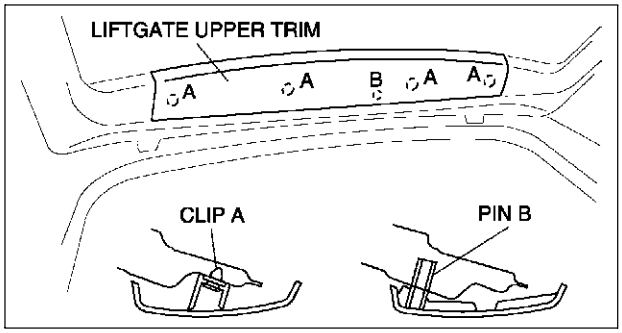

A6E7744W002

LIFTGATE SIDE TRIM REMOVAL/INSTALLATION

A6E774468940W01

1. Remove the liftgate upper trim.
2. Position the strap hanger as shown in the figure.

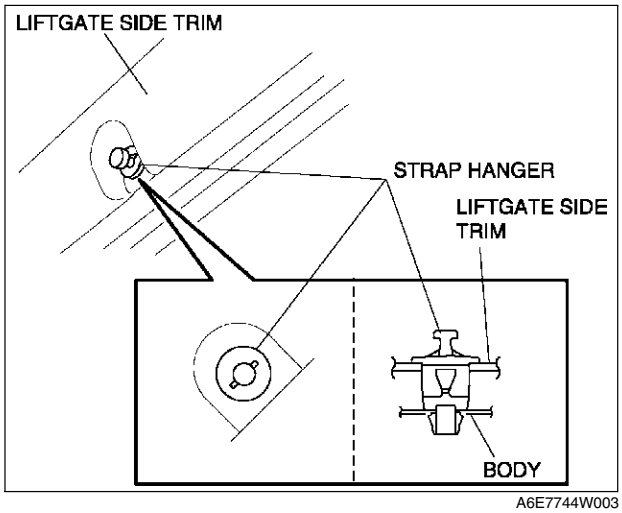

A6E7744W003

3. Pull the liftgate side trim toward you, then disengage clips A, pin B and the strap hanger from the body and pin B, hook C, D from the liftgate lower trim.
4. Remove the liftgate side trim.
5. Remove the hanger strap from the liftgate side trim.
6. Install in the reverse order of removal.

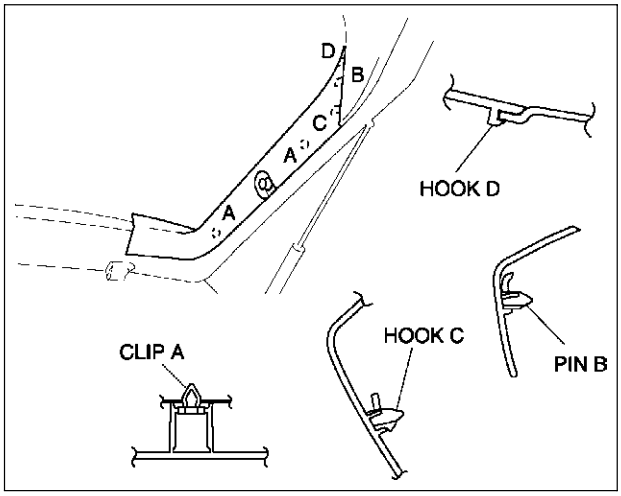

A6E7744W004

LIFTGATE LOWER TRIM REMOVAL/INSTALLATION

A6E774468960W01

1. Remove the liftgate upper trim.
2. Remove the liftgate side trim.
3. Pull the handle toward you, then remove the handle.
4. Pull the liftgate lower trim toward you, then disengage clips A, B and pins C, D from the body.
5. Remove the liftgate lower trim.
6. Install in the reverse order of removal.

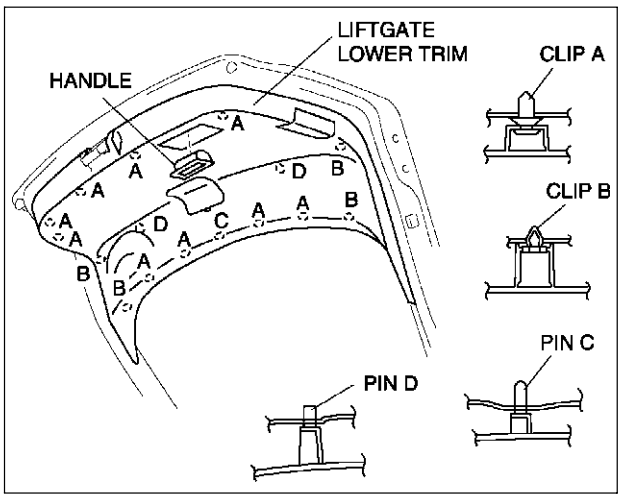

A6E7744W001

S

HEADLINER

HEADLINER REMOVAL/INSTALLATION

A6E774668030W01

1. Disconnect the negative battery cable.
2. Turn the seaming welt and weatherstrip over.
3. Remove the sunroof seaming welt. (vehicles with sunroof only)
4. Remove the A-pillar trims.
5. Remove the B-pillar upper trims.
6. Remove the C-pillar trims.
7. Remove the front and rear map light. (See T–48 FRONT MAP LIGHT REMOVAL/INSTALLATION.) (See T–49 REAR MAP LIGHT REMOVAL/INSTALLATION.)
8. Remove the sunvisors.
9. Remove the assist handle.
10. Disconnect the roof harness connector, remove the clip, and remove the connector.
11. Remove the fasteners.
12. Disconnect the front and rear drain hose.
13. Disconnect the rear washer hose (5HB).
14. Remove the hook holding the roof panel and remove the headliner.

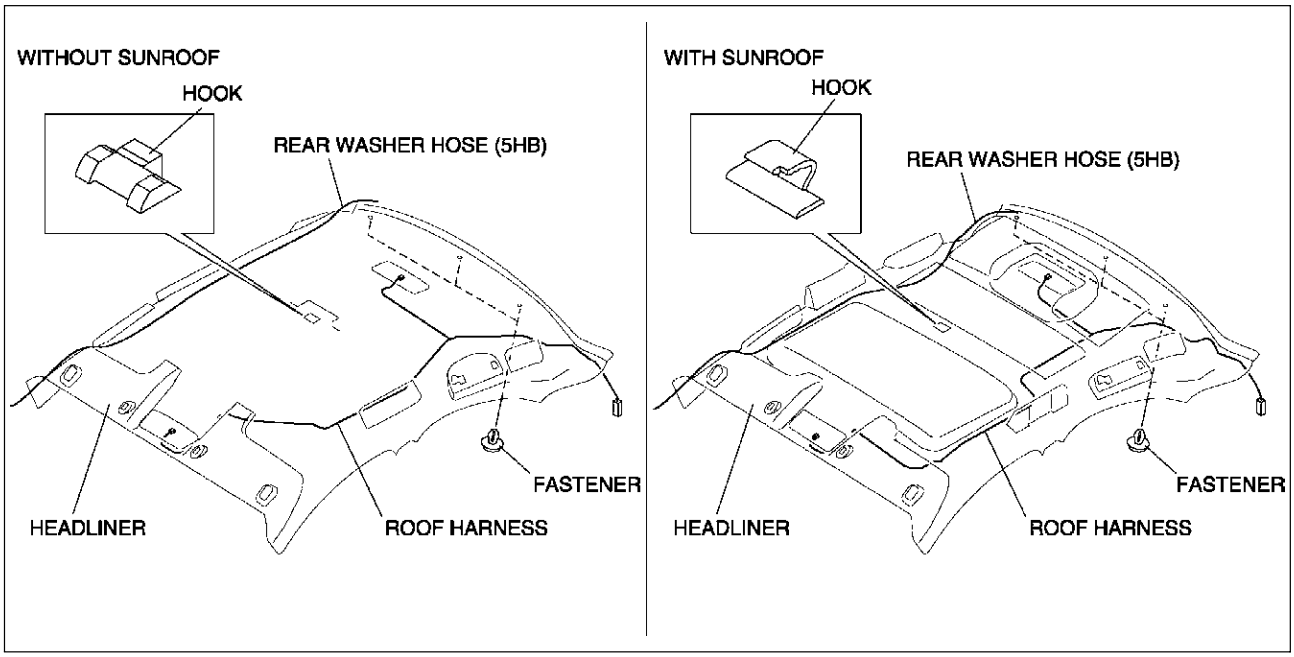

A6E7746W004

15. Take the headliner off from the passenger-side door opening.
16. Install in the reverse order of removal.

SHOCK ABSORBING PAD REMOVAL/INSTALLATION

A6E774668H10W01

1. Remove the headliner.
2. Remove the fastener, then remove the shock absorbing pad.
3. Install in the reverse order of removal.

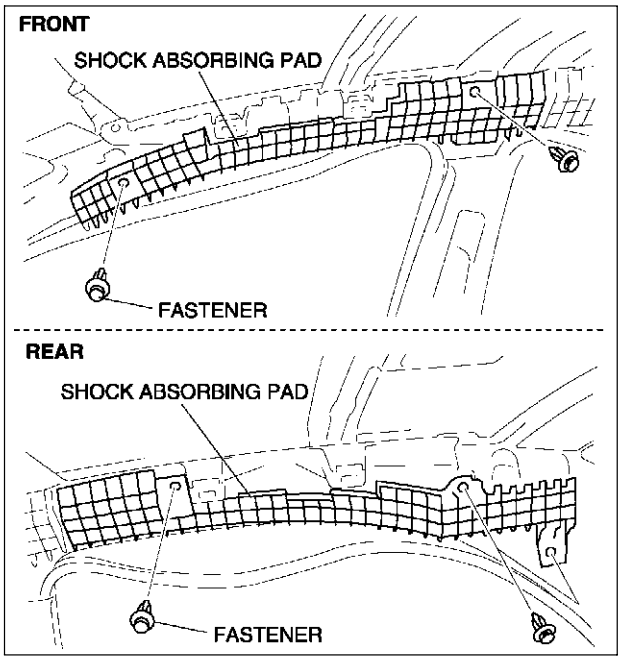

A6E7746W003

ASSIST HANDLE REMOVAL/INSTALLATION

A6E774669440W01

1. Insert a screwdriver into the assist handle notch and remove the assist handle cover.

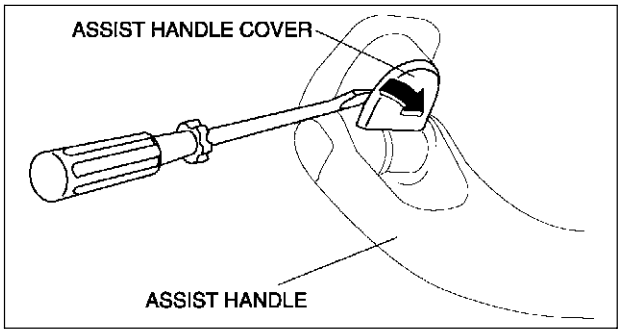

A6E7746W001

2. Pull the assist handle forward you, then remove the assist handle.
3. Install in the reverse order of removal.

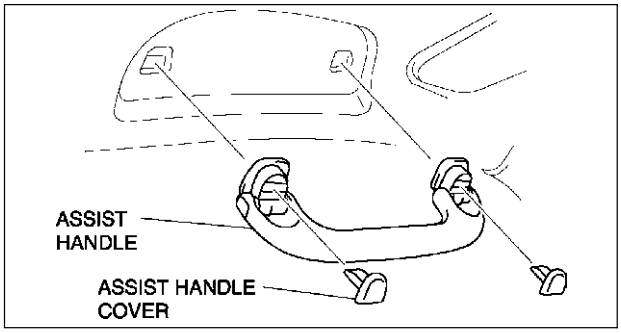

A6E7746W002

SUNVISOR REMOVAL/INSTALLATION

1. Remove the screws, then the sunvisor.

A6E774669270W01

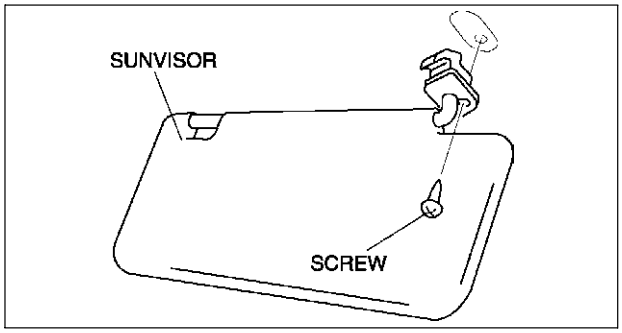

A6E7746W005

2. Disengage the center adapter (sunvisor stopper) from the body using a fastener remover.
3. Install in the reverse order of removal.

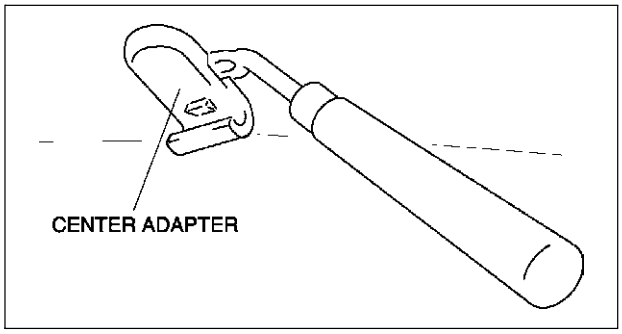

YTA7746W103

FLOOR COVERING

FRONT FLOOR COVERING REMOVAL/INSTALLATION

A6E774868670W01

1. Disconnect the negative battery cable.
2. Remove the front seats. (See S–105 FRONT SEAT REMOVAL/INSTALLATION.)
3. Remove the rear seat.
4. Remove the front scuff plates.
5. Remove the rear scuff plates.
6. Remove the console.
7. Remove the front side trims.
8. Remove the B-pillar lower trims.
9. Remove the lower anchor of the front seat belt installation bolts.
10. Remove the tire house trim. (5HB)
11. Remove the fuel-filler lid opener bezel.
12. Remove the fasteners.
13. Remove the cap nuts.
14. Remove the clips.

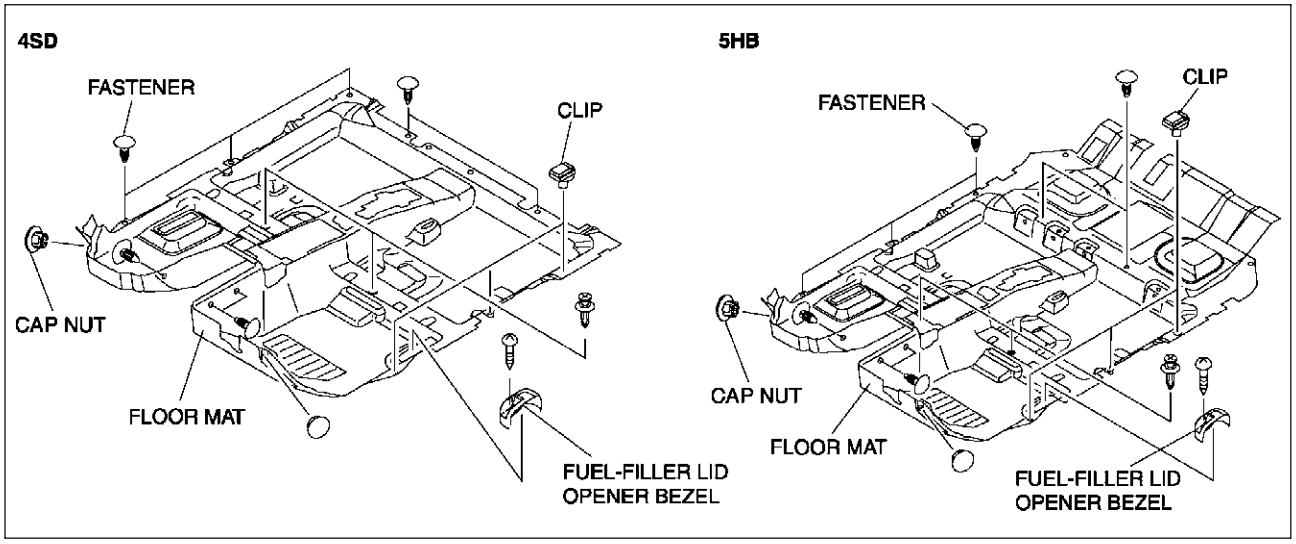

A6E7748W001

15. Take the front floor covering off from the passenger-side door opening.
16. Install in the reverse order of removal.

S

SEAT BELT

FRONT SEAT BELT REMOVAL/INSTALLATION

A6E775057630W01

Warning

- **Handling the front seat belt (pre-tensioner seat belt) improperly can accidentally deploy the pre-tensioner, which may seriously injure you. Read SERVICE WARNINGS before handling the front seat belt. (See T–117 SERVICE WARNINGS.)**

Warning

- **The side air bag sensor is attached to the lower part of the B-pillar. When working around the B-pillar, disconnect the negative battery cable or work carefully, avoiding excessive impact to the lower part of the B-pillar.**

Caution

- **The ELR has a spring that will unwind if the retractor's cover is removed. The spring cannot be rewound by hand. If this occurs, the ELR will not work properly. Therefore, do not disassemble the retractor.**

1. Turn the ignition switch to LOCK position.
2. Disconnect the negative battery cable and wait for **more than 1 minute**.
3. Remove the B-pillar lower trim.
4. Using a screwdriver, pry out the pre-tensioner seat belt connector's stopper plate.
5. Disconnect the pre-tensioner seat belt connector.

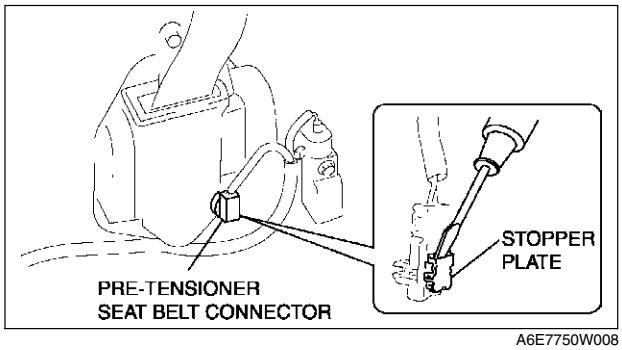

A6E7750W008

6. Remove the covers.
7. Remove the bolts and screw, then remove the front seat belt.
8. Install in the reverse order of removal.
9. Verify that the air bag system warning light illuminates for **approximately 6 seconds** and then goes off.
   - If the air bag system warning light does not operate in the manner described above, there are malfunction in the system. Inspect the system using the on-board diagnostic function.

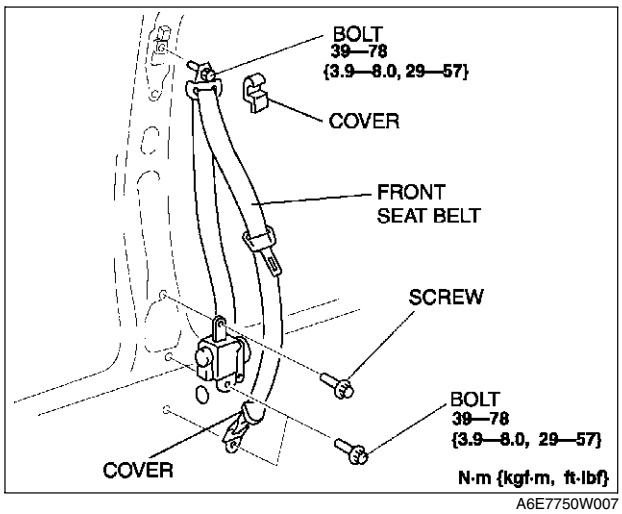

A6E7750W007

REAR SIDE SEAT BELT REMOVAL/INSTALLATION

A6E775057730W01

Caution

- **The ELR has a spring that will unwind if the retractor's cover is removed. The spring cannot be rewound by hand. If this occurs, the ELR will not work properly. Therefore, do not disassemble the retractor.**

4SD

1. Fold the rear seat back.
2. Remove the rear side seats.
3. Remove the rear package trim.
4. Remove the bolts.
5. Remove the rear seat belt.
6. Install in the reverse order of removal.

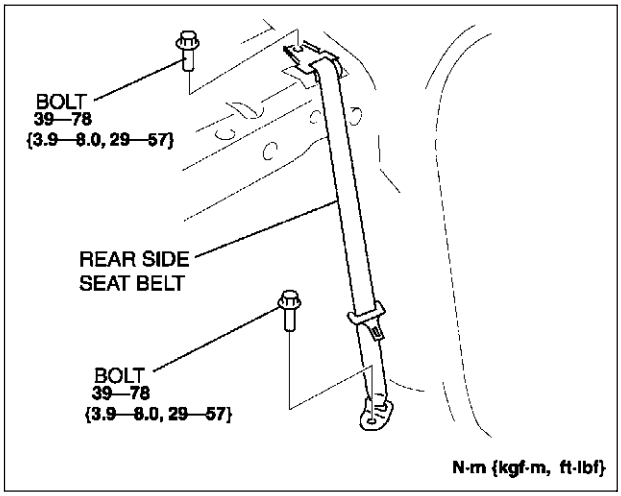

A6E7750W005

5HB

Note

- Rear side seat belts are embedded in the rear seat back. See rear seat disassembly/assembly, remove/install the rear center seat belt.

REAR CENTER SEAT BELT REMOVAL/INSTALLATION

A6E775057730W02

Caution

- **The ELR has a spring that will unwind if the retractor's cover is removed. The spring cannot be rewound by hand. If this occurs, the ELR will not work properly. Therefore, do not disassemble the retractor.**

4SD

1. Fold the rear seat back.
2. Remove the rear package trim.
3. Remove the bolt.
4. Remove the rear center seat belt.
5. Install in the reverse order of removal.

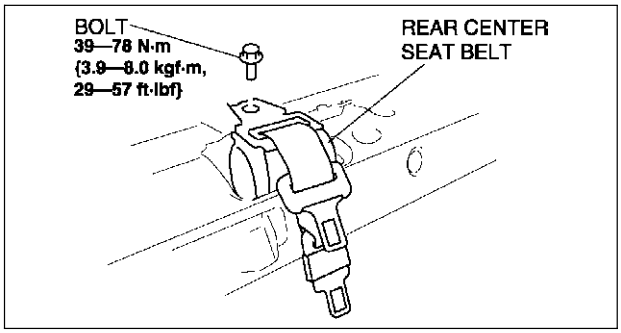

A6E7750W003

5HB

1. Remove the rear scuff plate.
2. Remove the tire house trim.
3. Remove the trunk side upper trim.
4. Remove the C-pillar trims.
5. Remove the bolts.
6. Remove the rear center seat belt.
7. Install in the reverse order of removal.

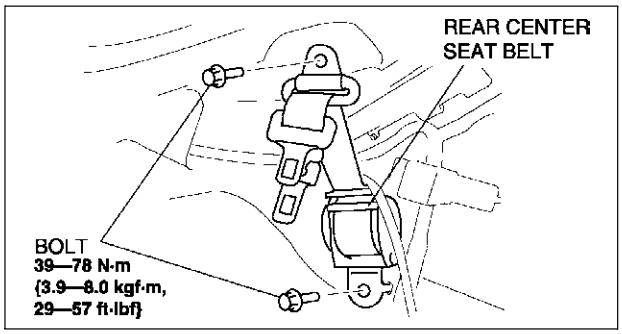

A6E7750W004

FRONT BUCKLE REMOVAL/INSTALLATION

A6E775057620W01

1. Perform the following procedure for vehicles with seat belt warning.
   (1) Disconnect the negative battery cable.
   (2) Remove the front seat.
   (3) Disconnect the buckle switch connector.
2. Perform the following procedure for vehicles without seat belt warning.
   (1) Remove the console.
3. Remove bolt.
4. Install in the reverse order of removal.

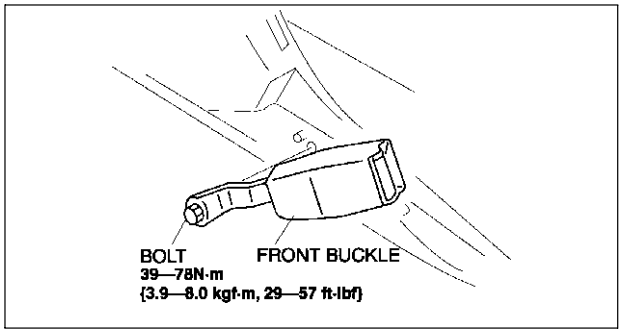

A6E7750W002.

REAR BUCKLE REMOVAL/INSTALLATION

A6E775057720W01

1. Remove the rear seat cushion.
2. Remove the bolts.
3. Remove the rear buckles.
4. Install in the reverse order of removal.

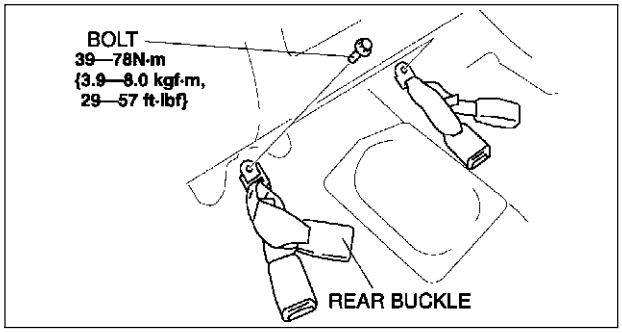

A6E7750W006

SEAT BELT INSPECTION

A6E775057000W01

Belt

1. Confirm that the seat belt is installed correctly.
2. Inspect the seat belt for damage and deformation of metal parts.
   - If any damage is found, replace as necessary.

ELR

1. Verify that the belt can be pulled out smoothly, and that it moves smoothly when wound.
   - If not as specified, replace the seat belt.
2. Verify that the retractor locks when the belt is quickly pulled.
   - If not as specified, replace the seat belt.
3. Remove the retractor.

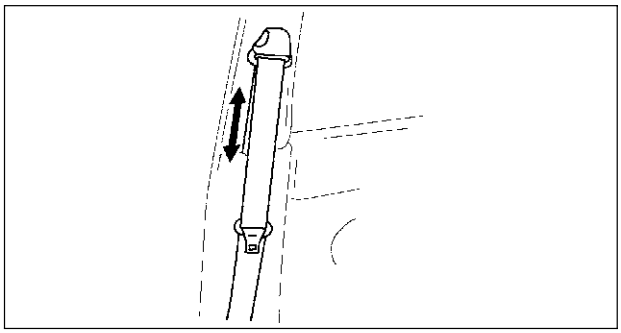

YMU811WB0

4. Make sure that the seat belt does not lock when the retractor is tilted slowly up to **15°** from the mounted position and locks when the retractor is tilted **40° or more**.
   - If not as specified, replace the seat belt.

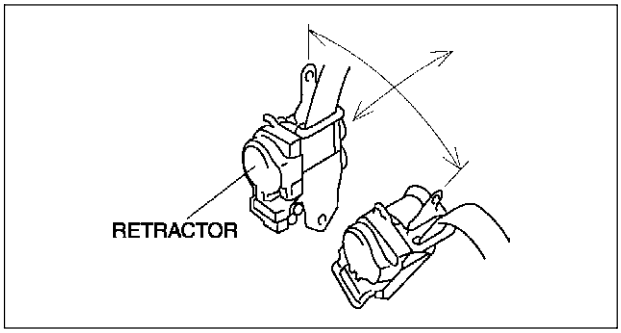

YMU811WA4

ALR

1. Pull the belt out fully and the lock mode changes from ELR to ALR.
2. Verify that retractor makes a clicking sound as the belt slowly retracts. If no sound is heard, the lock mode has not changed to ALR. If necessary, repeat the above Step 1.
   - If not as specified, replace the seat belt.
3. Verify that the belt locks when pulled.
   - If not as specified, replace the seat belt.
4. Verify that the lock mode changes to ELR when the belt fully retracts.
   - If not as specified, replace the seat belt.

Load Limiter Retractor

Warning

- **When the load limiter operates, the belt and anchor rub against each other strongly leaving a trace of wear. If the seat belt is used in this state, the seat belt will not function to its designed effect and there is the possibility of serious injury to passengers. Be sure to replace the seat belt once the load limiter operates.**

1. If the vehicle has been subjected to a shock in an accident, pull the belt from the retractor and confirm that there is no trace of wear (the load limiter has not operated) by visually inspecting and feeling the belt.
   - If not as specified, replace the seat belt.

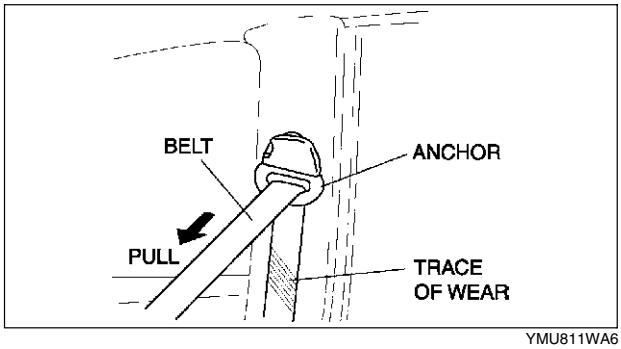

YMU811WA6

S

BUCKLE SWITCH INSPECTION

A6E775057620W02

Driver's Seat

1. Disconnect the negative battery cable.
2. Disconnect the buckle switch connector.
3. Inspect for continuity between the buckle switch terminals using an ohmmeter.
   - If not as specified, replace the front buckle.

○—○ : Continuity

Seat belt	Terminal	
	A	B
Fastened		
Unfastened	○	○

A6E7750W009

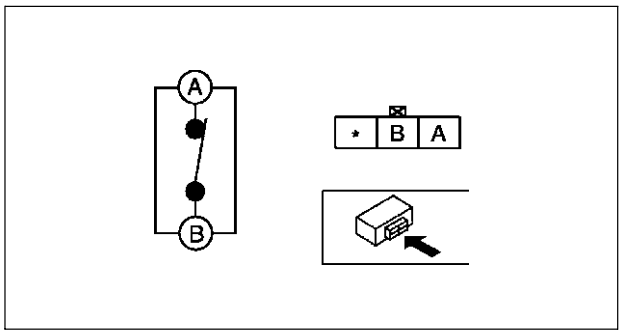

A6E7750W010

CHILD RESTRAINT SEAT ANCHOR REMOVAL/INSTALLATION

A6E77505777ZW01

1. Remove the cover.
2. Remove the bolt and child restraint seat anchor.
3. Install in the reverse order of removal.

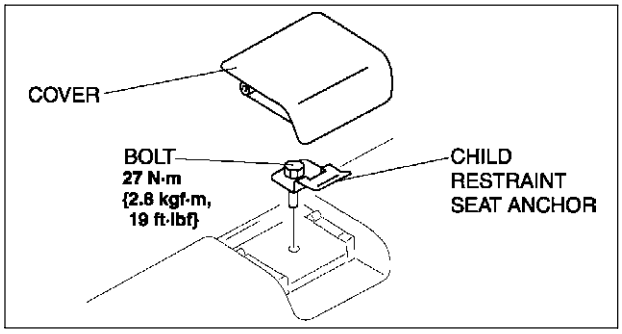

A6E7750W001

SEAT

FRONT SEAT REMOVAL/INSTALLATION

A6E775257100W01

Warning

- **Handling the front seat (side air bag) improperly can accidentally deploy the side air bag, which may seriously injure you. Read AIR BAG SYSTEM SERVICE WARNINGS before handling the front seat. (See T–117 SERVICE WARNINGS.)**

1. Turn the ignition switch to the LOCK position.
2. Disconnect the negative battery cable and wait for **more than 1 minute**.
3. Remove in the order indicated in the table.

1	Connector
2	Cover
3	Front seat

4. Install in the reverse order of removal.

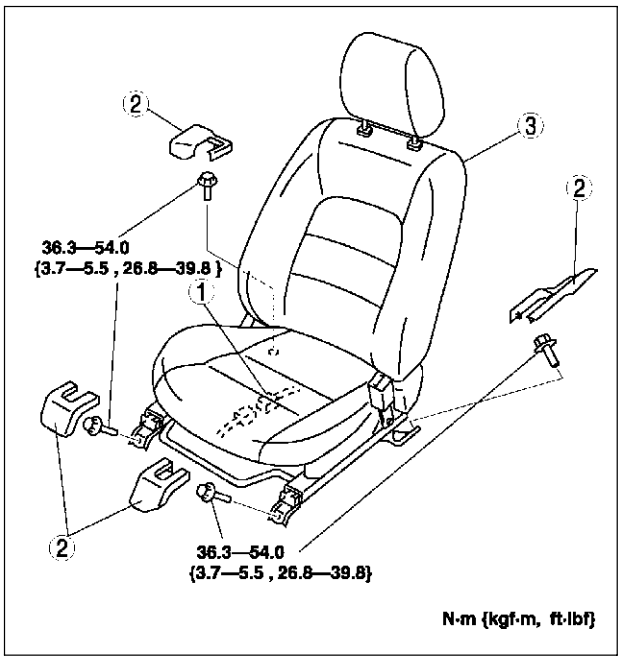

A6E7752W002

S

FRONT SEAT DISASSEMBLY/ASSEMBLY

A6E775257100W02

Warning

- **Handling the front seat (side air bag) improperly can accidentally deploy the side air bag, which may seriously injure you. Read AIR BAG SYSTEM SERVICE WARNINGS before handling the front seat. (See T–117 SERVICE WARNINGS.)**

1. Disconnect the negative battery cable and wait for **more than 1 minute**.
2. Remove the side air bag module. (See T–121 SIDE AIR BAG MODULE REMOVAL/INSTALLATION.)
3. Disassemble in the order indicated in the table.
4. Assemble in the reverse order of disassembly.

Driver's Seat (Normal Seat)

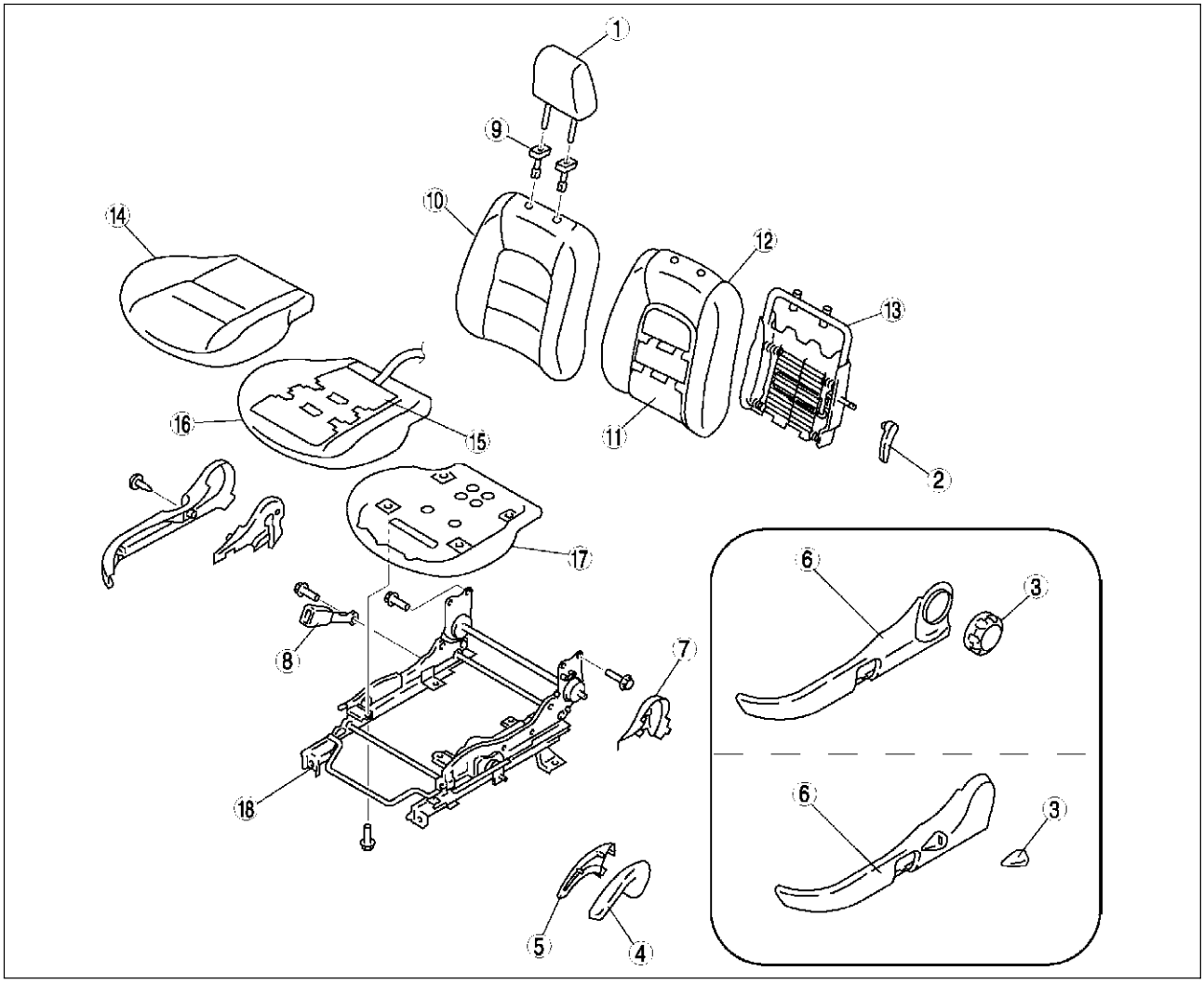

A6E7752W017

1	Headrest
2	Lumber support lever (See S–109 Lumber support lever disassembly note.)
3	Recliner dial (dial type) (See S–109 Recliner dial disassembly note.) Recliner lever (lever type)
4	Lift lever outer
5	Lift lever inner
6	Side cover (See S–109 Side cover disassembly note.)
7	Reverce cover

8	Front buckle
9	Pole guide
10	Seat back trim
11	Seat warmer unit (European (L.H.D.) specs. only)
12	Seat back pad
13	Seat back frame
14	Seat cushion trim
15	Seat warmer unit (European (L.H.D.) specs. only)
16	Seat cushion pad
17	Seat cushion frame
18	Slide adjuster

Driver's Seat (Power Seat)

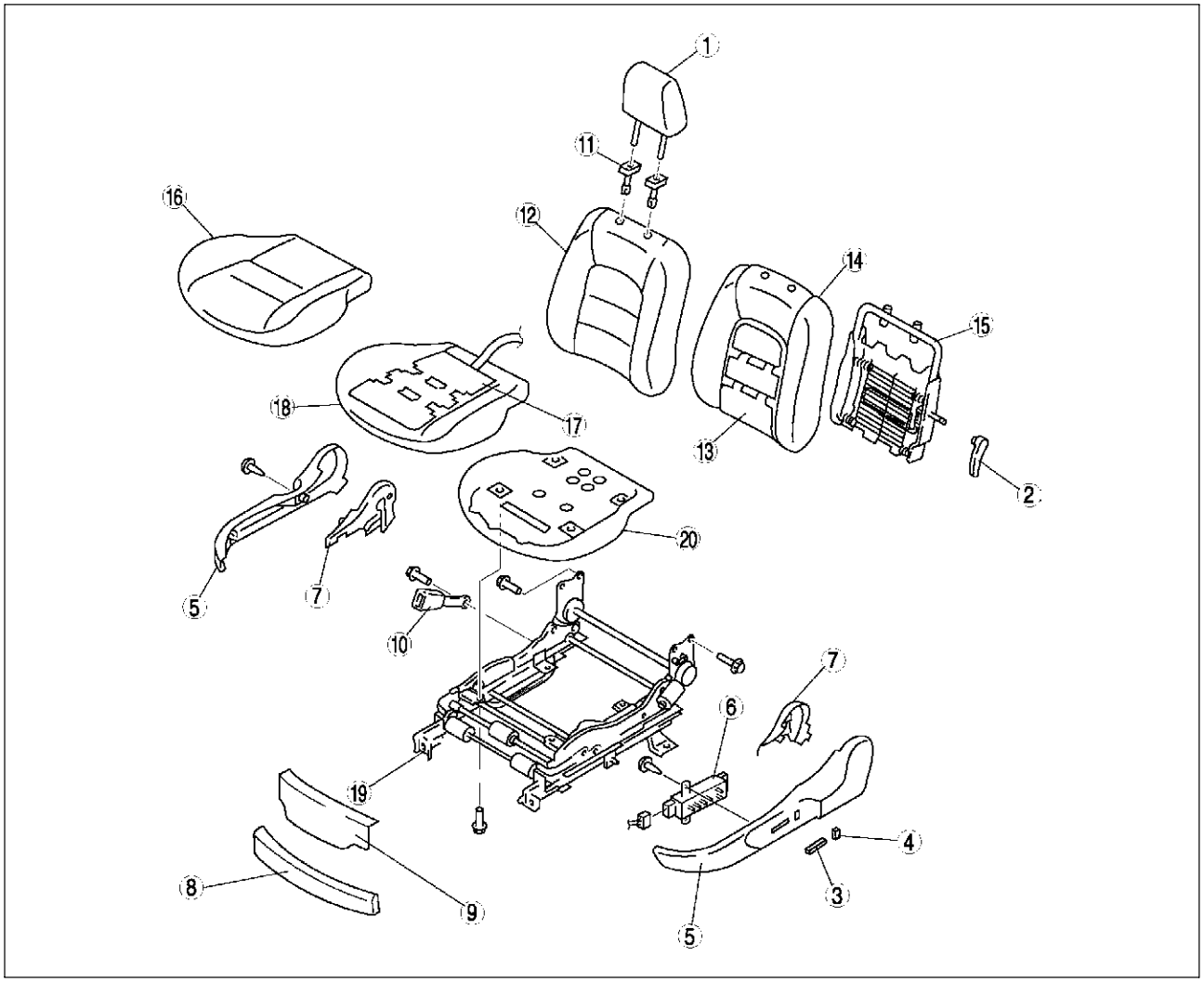

A6E7752W027

1	Headrest
2	Lumber support lever (See S–109 Lumber support lever disassembly note.)
3	Slider and lifter switch knob
4	Recliner switch knob
5	Side cover (See S–109 Side cover disassembly note.)
6	Power seat switch
7	Reverce cover
8	Front cover No. 1
9	Front cover No. 2

10	Front buckle
11	Pole guide
12	Seat back trim
13	Seat warmer unit (European (L.H.D.) specs. only)
14	Seat back pad
15	Seat back frame
16	Seat cushion trim
17	Seat warmer unit (European (L.H.D.) specs. only)
18	Seat cushion pad
19	Seat cushion frame
20	Slide adjuster

S

Passenger's Seat

Warning

- **Do not disassemble the seat cushion. Doing so will necessitate reassembly which may damage or press the occupancy sensor. This will cause the misoperation of the air bag system, which may seriously injure you.**

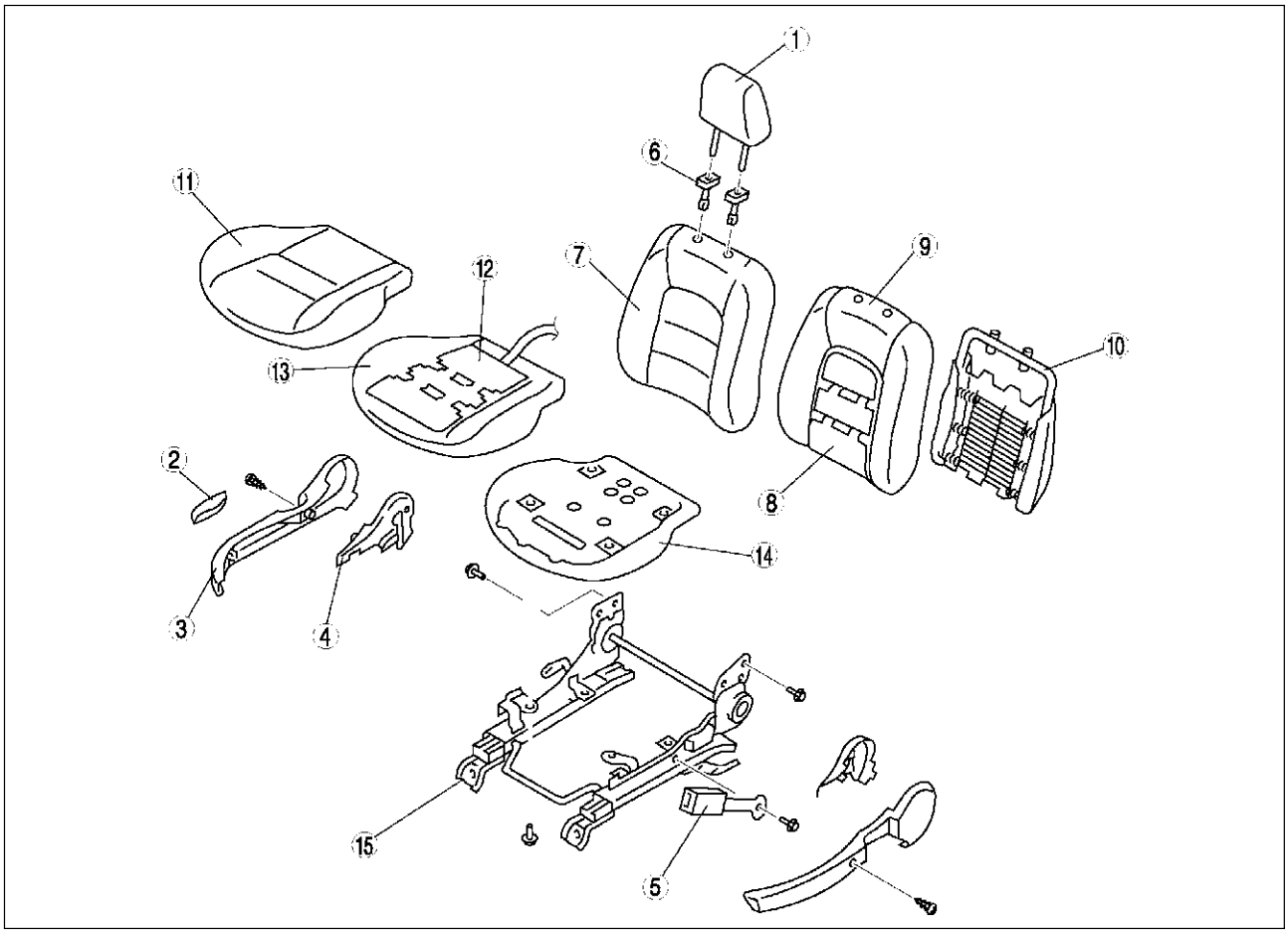

A6E7752W003

1	Headrest
2	Recliner lever
3	Side cover (See S–109 Side cover disassembly note.)
4	Reverse cover
5	Front buckle
6	Pole guide
7	Seat back trim

8	Seat warmer unit (European (L.H.D.) specs. only)
9	Seat back pad
10	Seat back frame
11	Seat cushion trim
12	Seat warmer unit (European (L.H.D.) specs. only)
13	Seat cushion pad
14	Seat cushion frame
15	Slide adjuster

Lumber support lever disassembly note

1. Remove the pin from the lumber support lever installation part with rag.

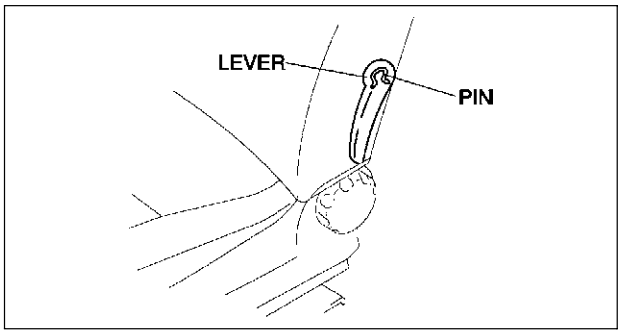

A6E7752W018

Recliner dial disassembly note

1. Remove the pin from the recliner dial installation part with rag.

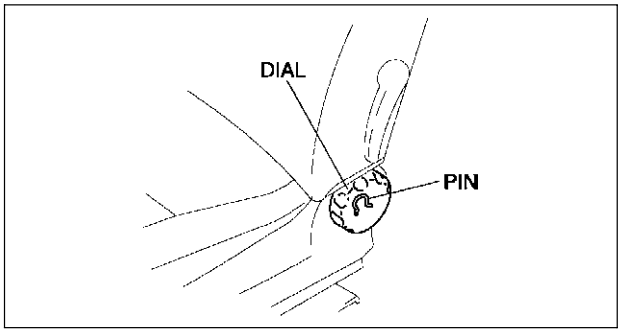

A6E7752W019

Side cover disassembly note

1. Remove the screws.
2. Disengage the clips.
3. Lift the side cover up in the direction of the arrow, then unhook it from slide adjuster.

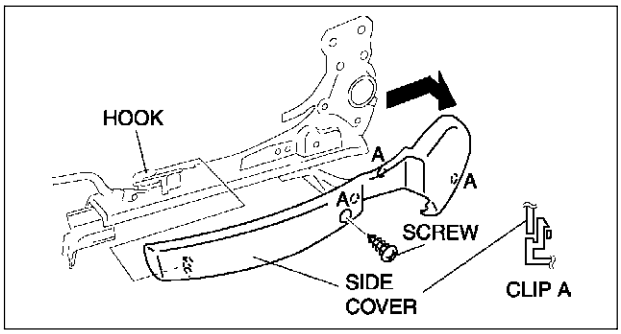

A6E7752W004

S

REAR SEAT REMOVAL/INSTALLATION

A6E775257200W01

4SD

1. Remove in the order indicated in the table.
2. Install in the reverse order of removal.

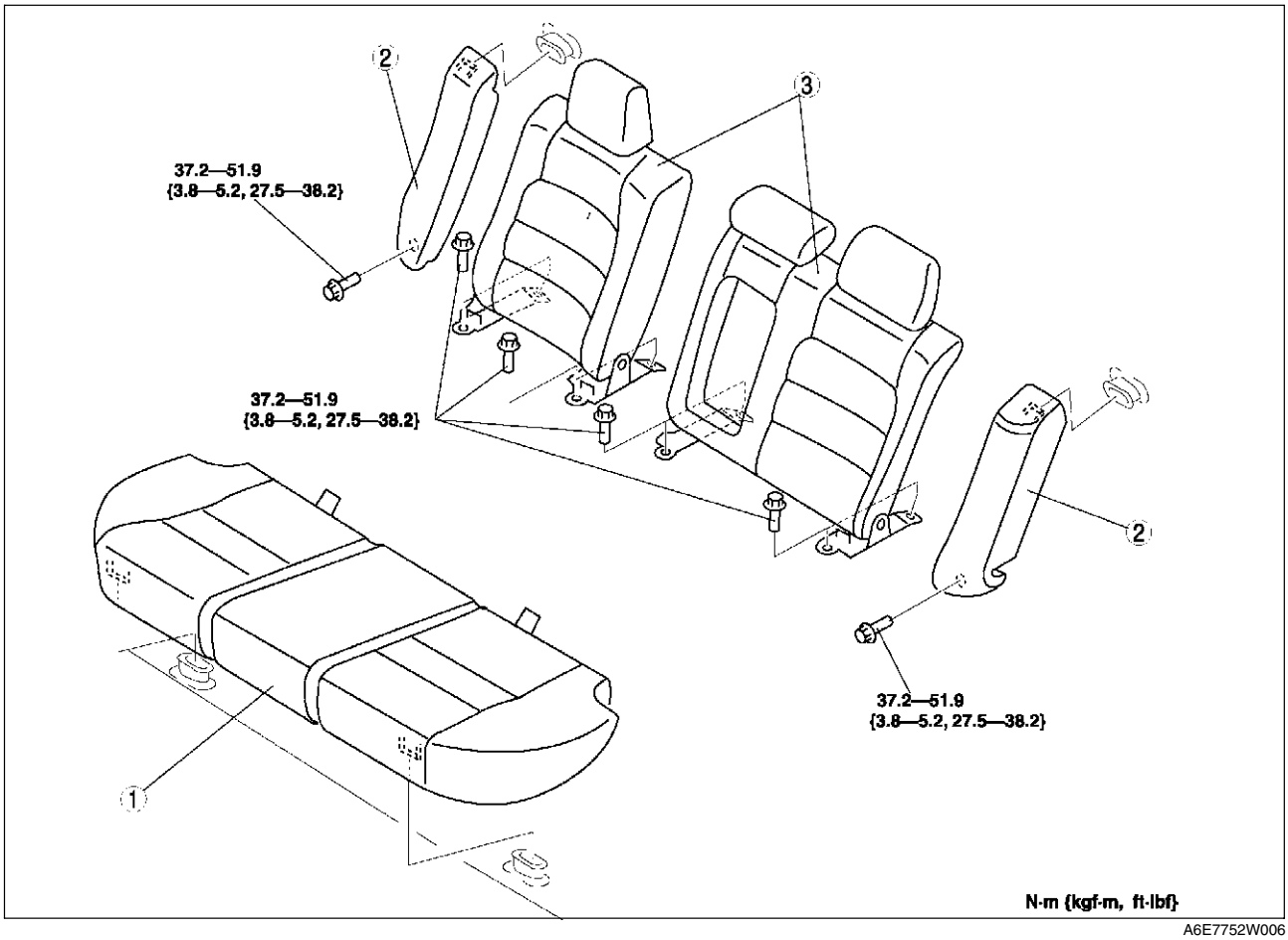

A6E7752W006

1	Rear seat cushion
2	Rear side seat

3	Rear seat back

5HB

1. Remove in the order indicated in the table.
2. Install in the reverse order of removal.

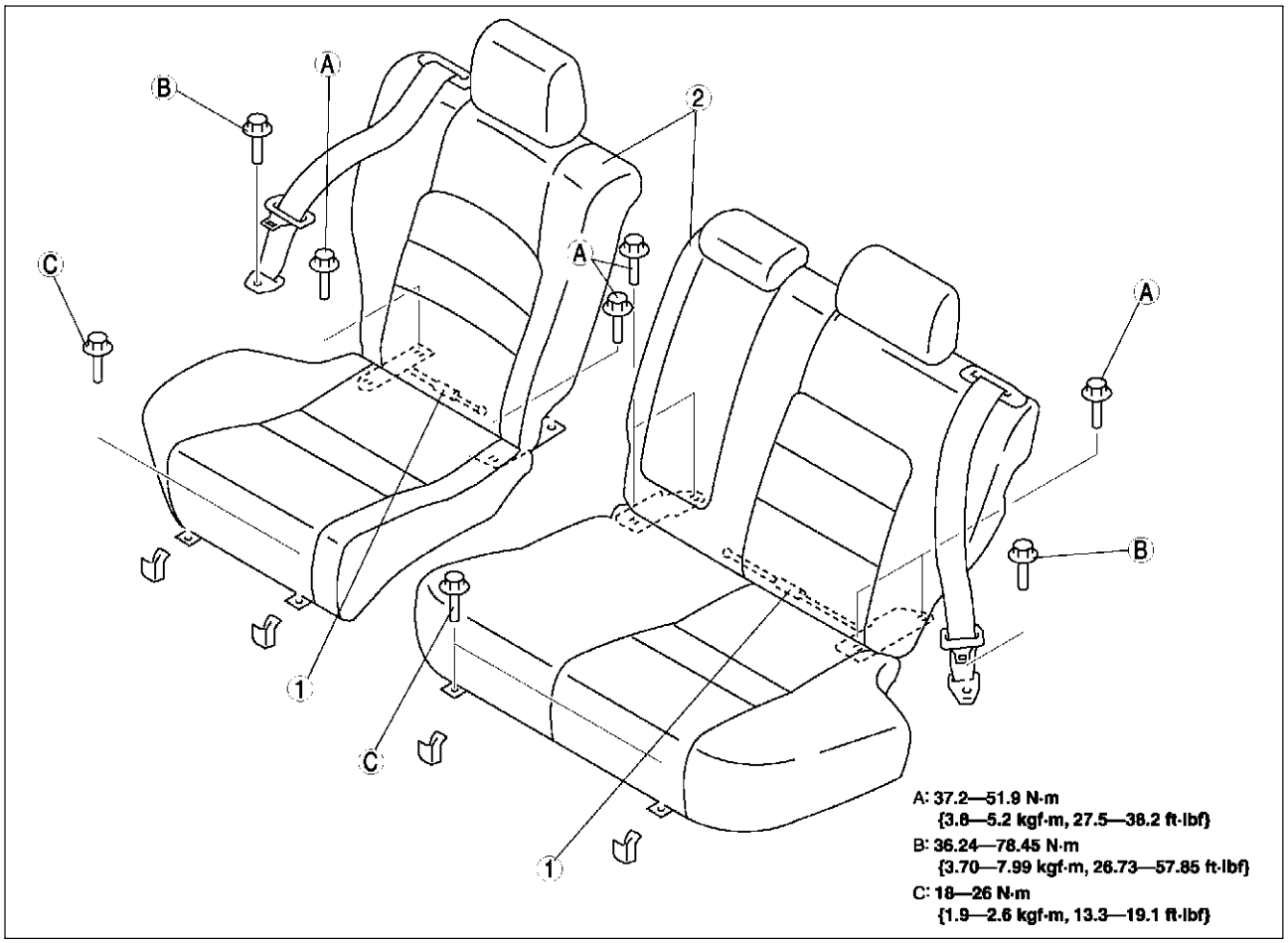

A6E7752W012

1	Remote wire (See S–111 Remote wire removal note.)

2	Rear seat (See S–112 Rear seat removal note.)

Remote wire removal note

1. Turn over the trunk floor mat.
2. Remove the case.
3. Remove the remote wire.

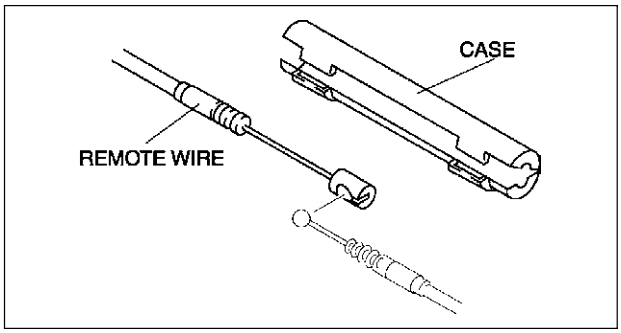

A6E7752W014

S

Rear seat removal note

1. Remove the front hinge installation bolts.
2. Lift the rear seat cushion, then remove the rear hinge installation bolts.

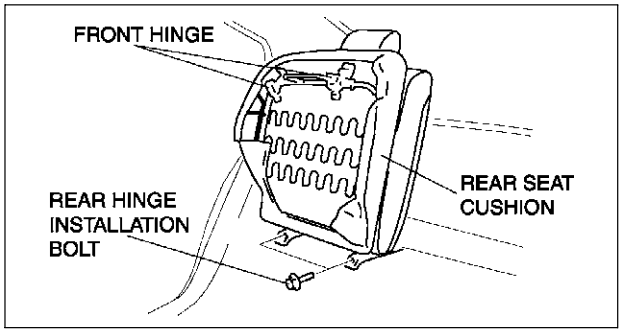

A6E7752W013

REAR SEAT DISASSEMBLY/ASSEMBLY

A6E775257200W02

4SD

1. Disassemble in the order indicated in the table.
2. Assemble in the reverse order of disassembly.

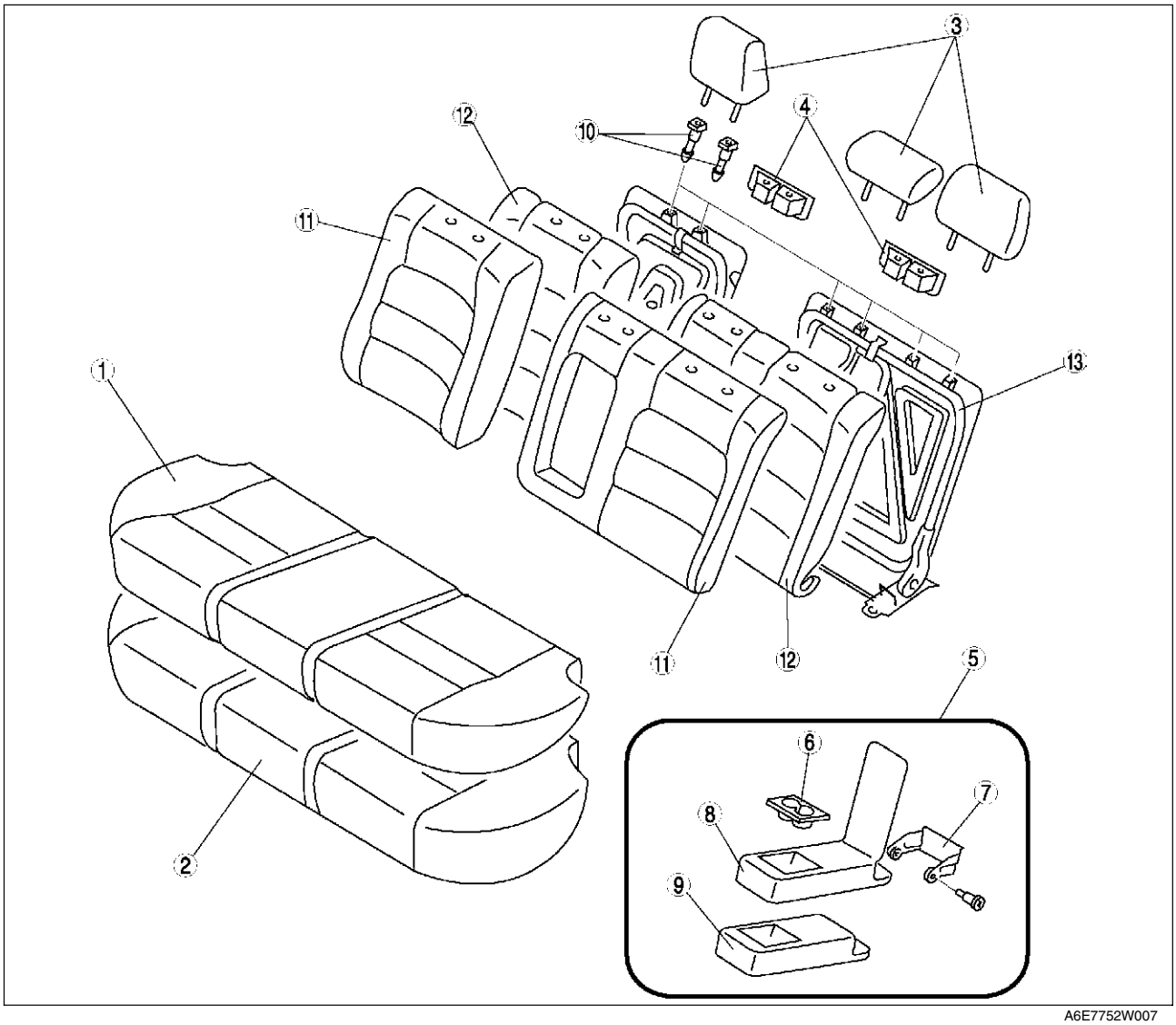

A6E7752W007

1	Seat cushion trim
2	Seat cushion pad
3	Headrest
4	Striker cover

5	Armrest assembly
6	Cup holder
7	Armrest hinge
8	Armrest trim

9	Armrest pad
10	Pole guide
11	Seat back trim

12	Seat back pad
13	Seat back frame

5HB

1. Disassemble in the order indicated in the table.
2. Assemble in the reverse order of disassembly.

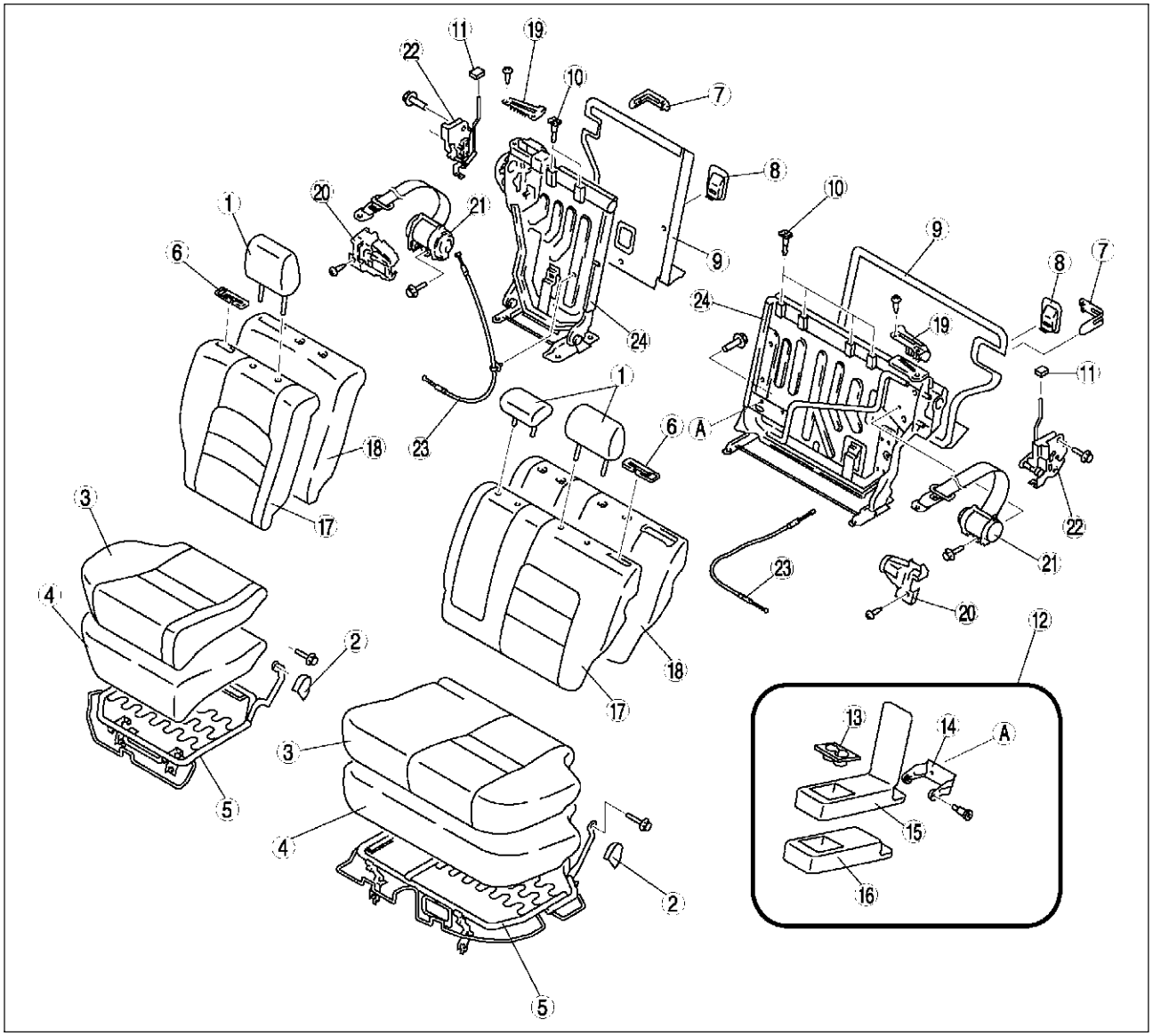

A6E7752W015

1	Headrest
2	Hinge cover
3	Seat cushion trim
4	Seat cushion pad
5	Seat cushion frame
6	Remote button cover
7	Seat back catch cover
8	Child seat anchor cover
9	Seat back board
10	Pole guide
11	Remote button
12	Armrest assembly

13	Cup holder
14	Armrest hinge
15	Armrest trim
16	Armrest pad
17	Seat back trim
18	Seat back pad
19	Seat belt guide
20	Retractor cover
21	Rear seat belt
22	Seat back catch
23	Remote wire
24	Seat back frame

REMOTE HANDLE LEVER REMOVAL/INSTALLATION

A6E775200166W01

4SD

1. To remove the remote wire, remove the trunk side trim.
2. Remove in the order indicated in the table.

1	Remote handle lever
2	Remote wire
3	Remote catch

3. Install in the reverse order of removal.

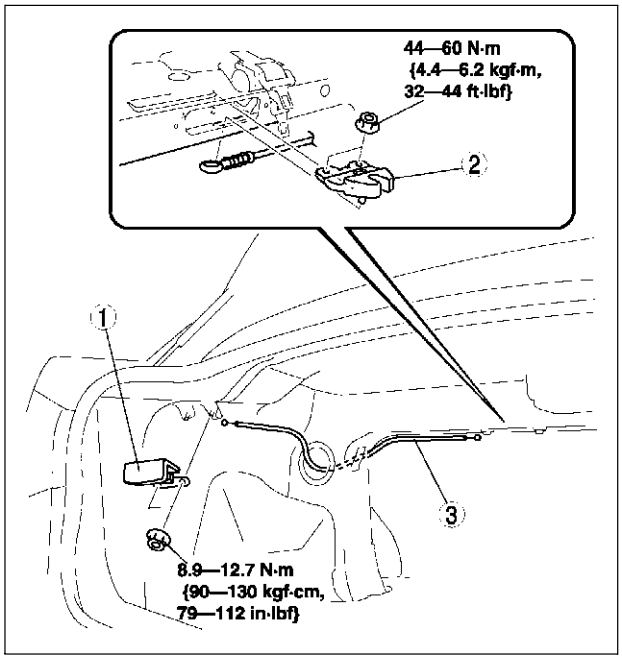

A6E7752W005

5HB

1. To remove the remote wire, remove the trunk side upper trim and trunk side trim.
2. Remove in the order indicated in the table.

1	Remote handle lever
2	Cover
3	Remote wire

3. Install in the reverse order of removal.

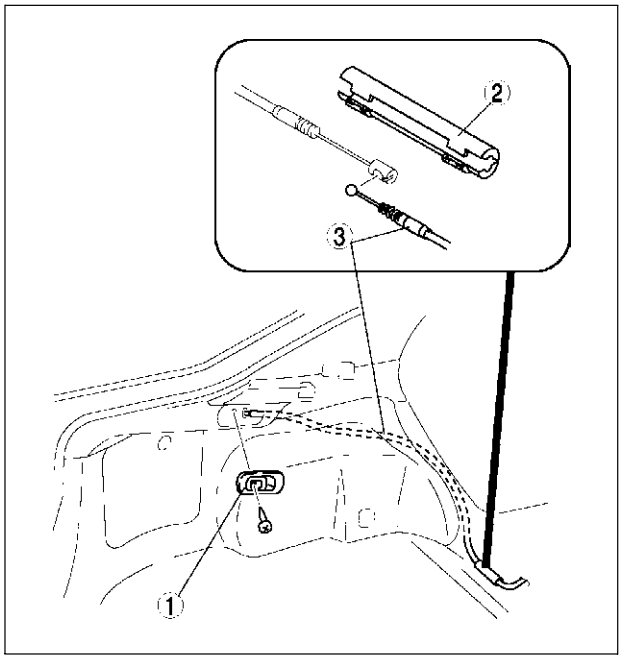

A6E7752W011

SEAT BACK STRIKER REMOVAL/INSTALLATION

A6E775262361W01

1. Remove the tire house trim.
2. Remove the trunk side upper trim and trunk side lower trim.
3. Remove the bolts.
4. Remove the seat back striker.
5. Install in the reverse order of removal.

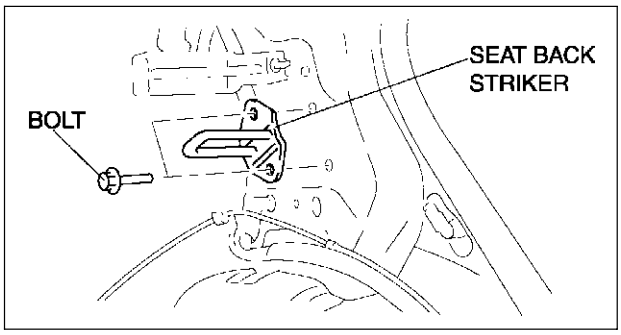

A6E7752W016

POWER SEAT SWITCH INSPECTION

A6E775257155W01

1. Disconnect the power seat switch connector.
2. Disconnect the rear tilt motor connector.
3. Inspect for continuity between the power seat switch connector terminals using an ohmmeter.
   - If not as specified, replace the power seat switch.

○—○ : Continuity

Switch position		Terminal									
		A (A)	B (B)	C (E)	D (D)	E (C)	G (G)	H (J)	J (H)	K (K)	L (L)
Recliner	Forward	○									○
	Off		○							○	○
	Backward	○	○							○	○
Slide	Forward	○			○		○			○	
	Off				○		○			○	
	Backward	○			○		○			○	
Front tilt	Up	○		○		○				○	
	Off			○		○				○	
	Down	○		○		○				○	
Rear tilt	Up	○						○	○	○	
	Off							○	○	○	
	Down	○						○	○	○	

( ): R.H.D.

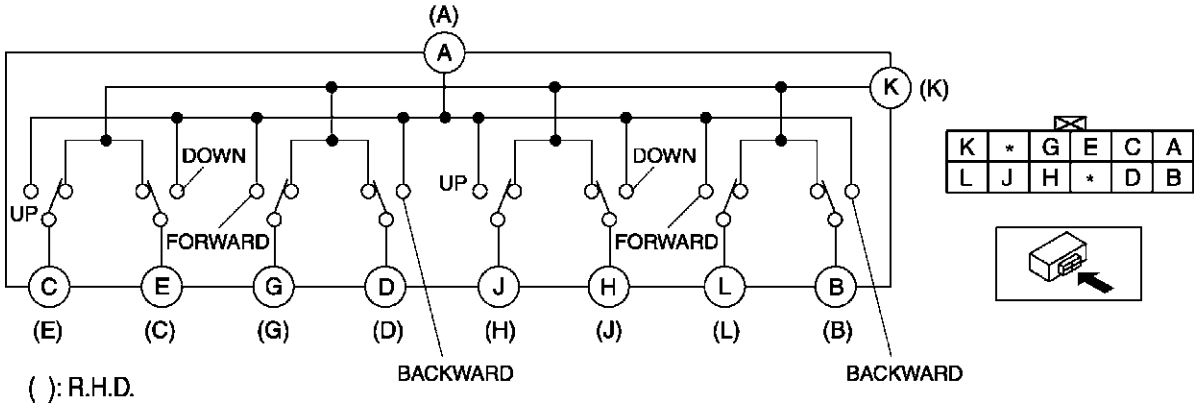

A6E7752W029

FRONT TILT MOTOR INSPECTION

A6E775288650W01

1. Disconnect the front tilt motor connector.
2. Inspect the front tilt motor operation when B+ is applied to the terminals as shown.
   - If not as specified, replace the seat cushion frame.

Motor operation	Connection	
	B+	GND
Up	A (B)	B (A)
Down	B (A)	A (B)

( ) : R.H.D.

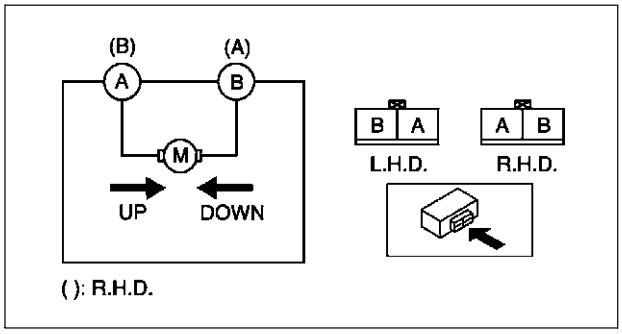

A6E7752W008

REAR TILT MOTOR INSPECTION

A6E775288651W01

1. Disconnect the rear tilt motor connector.
2. Inspect the rear tilt motor operation when B+ is applied to the terminals as shown.
   - If not as specified, replace the seat cushion frame.

Motor operation	Connection	
	B+	GND
Up	A (B)	B (A)
Down	B (A)	A (B)

( ) : R.H.D.

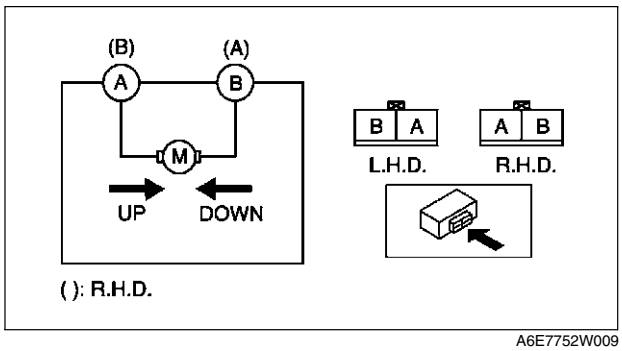

A6E7752W009

SLIDE MOTOR INSPECTION

A6E775288662W01

1. Disconnect the slide motor connector.
2. Inspect the slide motor operation when B+ is applied to the terminals as shown.
   - If not as specified, replace the seat cushion frame.

Motor operation	Connection	
	B+	GND
Forward	A	B
Backward	B	A

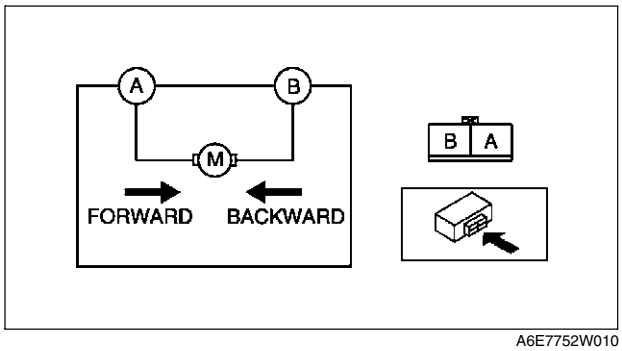

A6E7752W010

RECLINER MOTOR INSPECTION

A6E775288663W01

1. Disconnect the recliner motor connector.
2. Inspect the recliner motor operation when B+ is applied to the terminal as shown.
   - If not as specified, replace the seat cushion frame.

Motor operation	Connection	
	B+	GND
Forward	B	A
Backward	A	B

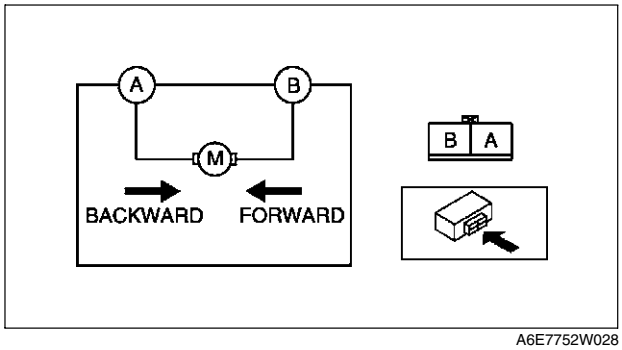

A6E7752W028

SEAT WARMER SWITCH REMOVAL/INSTALLATION

A6E775259000W01

1. Disconnect the negative battery cable.
2. Remove the brake boots panel. (See S–86 CONSOLE REMOVAL/INSTALLATION.)
3. Remove in the order indicated in the table.

1	Seat warmer switch (See S–117 Seat Warmer Switch Removal Note.)
2	Connector

4. Install in the reverse order of removal.

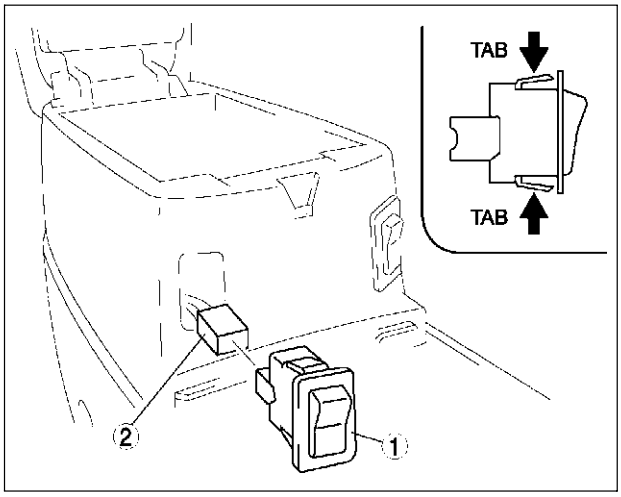

A6E7752W001

Seat Warmer Switch Removal Note

1. Squeeze the tabs of seat warmer switch and pull it forward to remove it.

SEAT WARMER SWITCH INSPECTION

A6E775259000W02

1. Remove the seat warmer switch.
2. Inspect for continuity between the seat warmer switch terminals using an ohmmeter.
   - If not as specified, replace the seat warmer switch.

Driver's side

○—○ : Continuity ○-⊗-○ : Bulb

Switch position	Terminal				
	B	H	F	A	G
ON	○-⊗-○		○	○-⊗-○	
OFF	○-⊗-○			○-⊗-○	

A6E7752W024

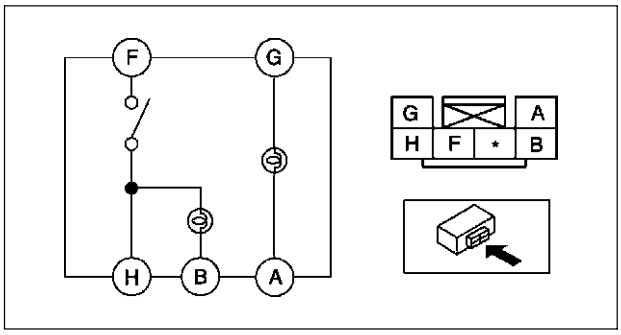

A6E7752W025

Passenger's side

○—○ : Continuity ○-⊗-○ : Bulb

Switch position	Terminal				
	B	H	F	A	G
ON	○-⊗-○		○	○-⊗-○	
OFF	○-⊗-○			○-⊗-○	

A6E7752W024

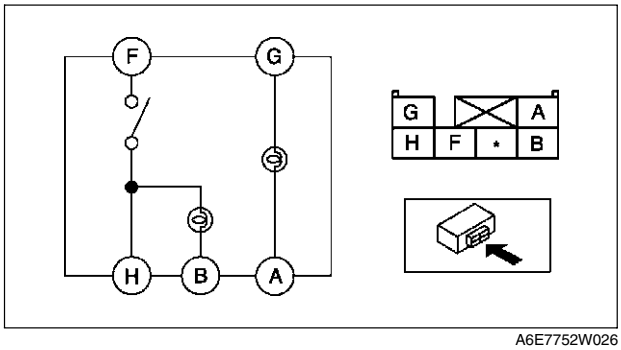

A6E7752W026

S

SEAT WARMER UNIT INSPECTION

A6E775259000W03

1. Remove the front seat. (See S–105 FRONT SEAT REMOVAL/INSTALLATION.)
2. Remove the seat cushion trim.
3. While inspecting for continuity between the terminals A and B of the connector, use a dryer to warm the thermostat of the seat warmer unit on seat cushion.

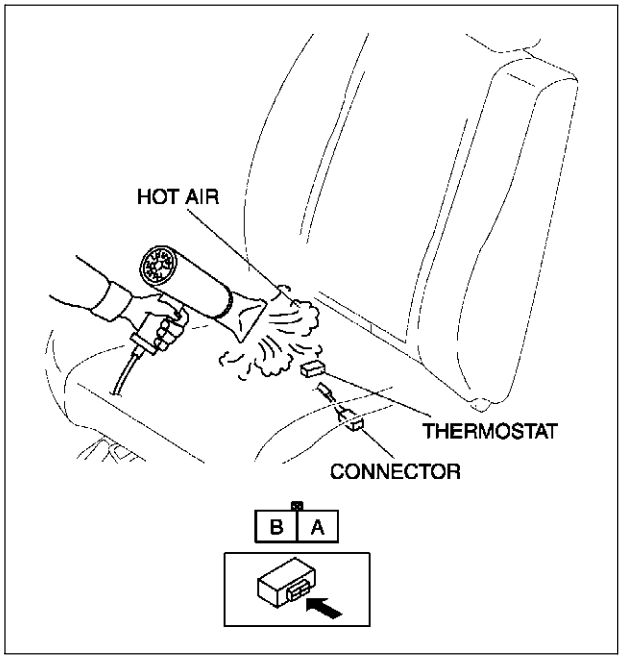

A6E7752W020

4. When the indication on the ohmmeter is no continuity, turn off the dryer, then use a thermometer to measure the temperature of the thermostat.
5. Verify that the temperature is **approximately 29 °C {84 °F}**.

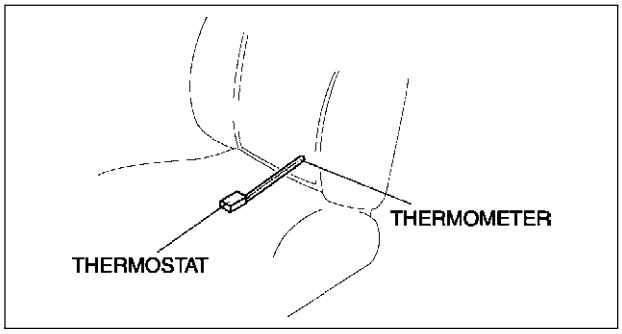

A6E7752W021

6. Verify that there is continuity between the terminals of seat warmer unit's connector using an ohmmeter when temperature drops to **approximately 20 °C {68 °F}**.

○—○ : Continuity

Thermostat temperature	Terminal	
	A	B
More than approx. 29 °C {84 °F}		
Less than approx. 20 °C {68 °F}	○	○

A6E7752W022

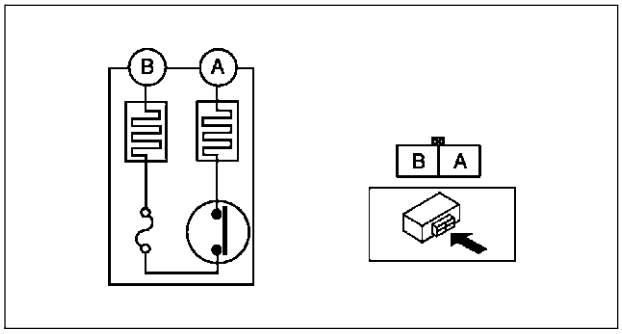

A6E7752W023

BODY SHELL

SHROUD PANEL REMOVAL/INSTALLATION

A6E775453140W01

1. Remove the bonnet. (See S–10 BONNET REMOVAL/INSTALLATION.)
2. Remove the front bumper. (See S–47 FRONT BUMPER REMOVAL/INSTALLATION.)
3. Remove the front combination light. (See T–26 FRONT COMBINATION LIGHT REMOVAL/INSTALLATION.)
4. Remove the front bumper reinforcement. (See S–48 BUMPER REINFORCEMENT REMOVAL/INSTALLATION.)
5. Remove in the order indicated in the table.

1	Radiator mount cover
2	Radiator mount rubber
3	Bolt
4	Shroud panel

6. Install in the reverse order of removal.

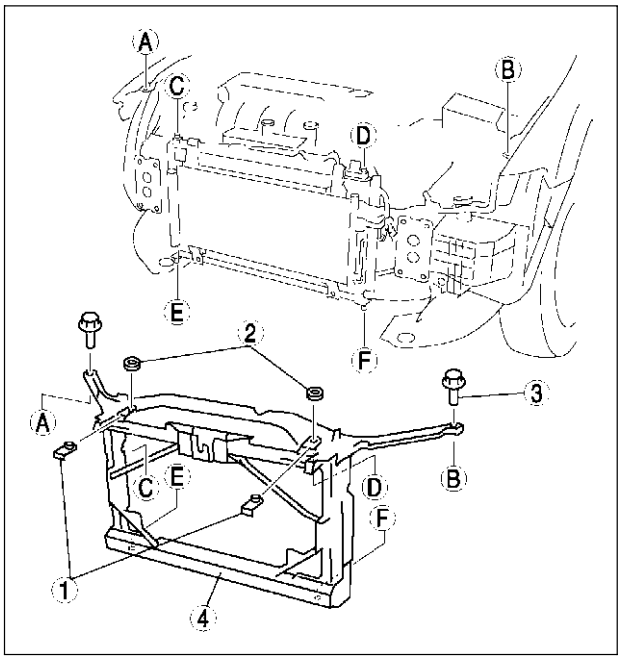

A6E7754W001

COWL PANEL REMOVAL/INSTALLATION

A6E775453580W01

1. Remove the windshield wiper arm and blade. (See T–57 WINDSHIELD WIPER ARM AND BLADE REMOVAL/INSTALLATION.)
2. Remove the cowl grille.
3. Remove the windshield wiper motor. (See T–56 WINDSHIELD WIPER MOTOR REMOVAL/INSTALLATION.)
4. Remove in the order indicated in the table.

1	Gusset
2	Cowl panel

5. Install in the reverse order of removal.

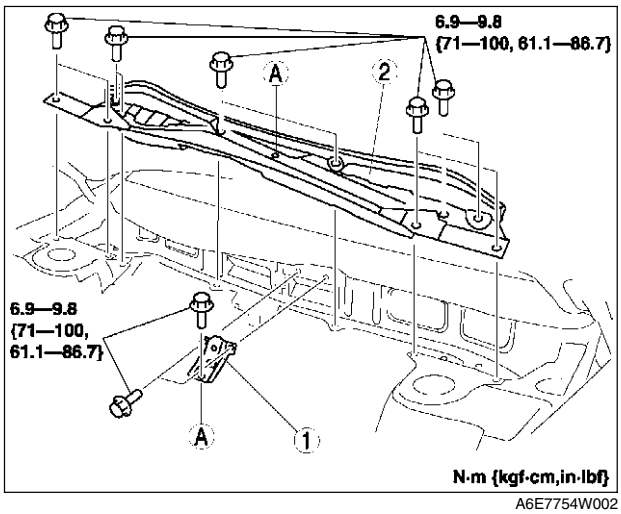

A6E7754W002

TROUBLESHOOTING [POWER WINDOW SYSTEM]

INTERMITTENT CONCERN TROUBLESHOOTING

A6E778058000W01

Vibration Method

- If malfunction occurs or becomes worse while driving on a rough road or when engine is vibrating, perform the steps below.

Note

- There are several reasons why vehicle or engine vibration could cause an electrical malfunction. Some of the things to check for:
  - — Connectors not fully seated.
  - — Wire harnesses not having full play.
  - — Wires laying across brackets or moving parts.
  - — Wires routed too close to hot parts.
- An improperly routed, improperly clamped, or loose harness can cause wiring to become pinched between parts.
- The connector joints, points of vibration, and places where wire harnesses pass through the firewall, body panels, etc. are the major areas to be checked.
- Check for DTCs or malfunctions by shaking harnesses and connectors that are suspected to be causing malfunction.

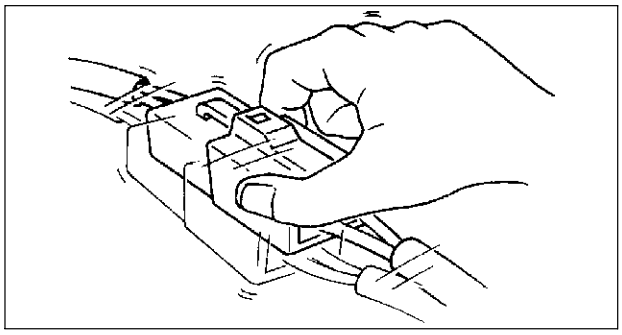

YDE7780W001

Connector Terminal Check Method

1. Check the connection condition of each female terminal.
2. Insert male terminal into the female terminals to check for looseness.

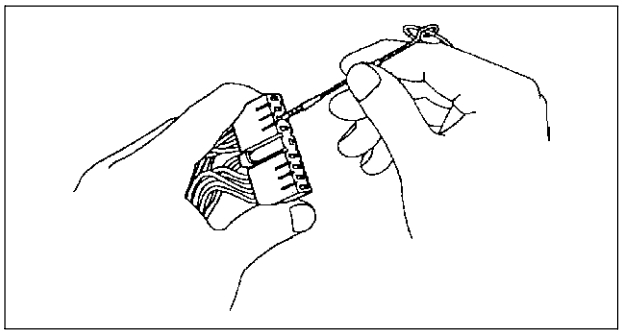

YDA8180W000

FOREWORD

A6E778058000W02

- Always perform basic power window system inspection before troubleshooting.
- Troubleshooting gives content unique to trouble caused by problems in the automatic window return function.

BASIC POWER WINDOW SYSTEM INSPECTION

A6E778058000W03

Manual Mode Function Inspection

STEP	INSPECTION		ACTION
1	• Turn ignition switch to ON position. • Do all windows go up and down in manual mode using power window main switch?	Yes	Go to next step.
		No	• Inspect the following items: — Power window main switch power supply fuses — Power window main switch ground wiring harness — Power window main switch power supply wiring harnesses — Wiring harness between power window main switch and power window motor — Power window main switch — Power window motor — Each power window motor wire installation point — Each window installation point on its carrier plate — Each power window regulator installation point on each door • Repair or replace the problem area, then go to Step 4.
2	• Does each window go up and down in manual mode using power window subswitch?	Yes	Go to next step.
		No	• Inspect the following items: — Power window main switch (power-cut switch system malfunction) — Power window subswitch — Subswitch power supply wiring harnesses • Repair or replace the problem area, then go to automatic mode function inspection.
3	• Turn power-cut switch UNLOCK. • Push/pull power window main switch (switches for all doors in manual mode). • Does only driver-side front window go up and down?	Yes	• Manual mode function is normal. • Go to automatic mode function inspection.
		No	Replace power window main switch, then go to automatic mode function inspection (power-cut switch system malfunction).

Automatic Mode Function Inspection

STEP	INSPECTION		ACTION
1	• Turn ignition switch to ON position. • Operate power window main switch for driver-side front door in automatic mode. • Does driver-side front window go up and down?	Yes	Go to next step.
		No	**Driver-side front window does not go up and down in automatic mode:** • Go to Step 1 of NO. 1 DRIVER-SIDE FRONT WINDOW DOES NOT GO UP AND DOWN IN AUTOMATIC MODE. **Driver-side front window go up and down in automatic mode, but driver-side front window reverses:** • Go to Step 1 of NO. 3 DRIVER-SIDE FRONT WINDOW REVERSES EVEN THOUGH THE GLASS DOES NOT ENCOUNTER A FOREIGN OBJECT WHILE IT IS GOING UP IN AUTOMATIC MODE.
2	• Gently pull the driver-side front power window switch while driver-side front window is going down in automatic mode. • Does the glass stop?	Yes	Go to next step.
		No	Replace power window main switch, then go to automatic window return function inspection.
3	• Gently press the driver-side front power window switch while driver-side front window is going up in automatic mode. • Does the glass stop?	Yes	• Automatic mode function is normal. • Go to automatic window return function inspection.
		No	Replace power window main switch, then go to automatic window return function inspection.

S

Automatic Window Return Function Inspection

STEP	INSPECTION		ACTION
1	• Turn ignition switch to ON position. • Lower driver-side front window completely. • Use power window main switch to close driver's window in automatic mode. • Does window automatically reverse even though the glass does not encounter a foreign object while it is going up in automatic mode?	Yes	Go to Step 1 of NO. 3 DRIVER-SIDE FRONT WINDOW REVERSES EVEN THOUGH THE GLASS DOES NOT ENCOUNTER A FOREIGN OBJECT WHILE IT IS GOING UP IN AUTOMATIC MODE.
		No	Go to next step.
2	• Lower driver-side front window completely. • Take a hammer and hold it against the inside of the top of the window frame so that the window will hit its handle when it is closed. • Raise the window using automatic mode. • When the window hits the hammer handle, does it immediately reverse and go down to **approximately 200 mm {7.87 in}** from the completely closed position?	Yes	• Automatic window return function inspection is normal. • Go to IG OFF timer function inspection.
		No	Go to Step 1 of NO. 2 DRIVER-SIDE FRONT WINDOW DOES NOT REVERSE, EVEN WHEN ENCOUNTERING A FOREIGN OBJECT IN ITS PATH.

IG OFF Timer Function Inspection

STEP	INSPECTION		ACTION
1	• Turn ignition switch to ON position. • In automatic mode, push down power window main switch for driver-side front window. Window should go down within **approximately 42 seconds** from ignition switch OFF position. • In manual mode (finger continuously depressing power window main switch), window should go down within **approximately 42 seconds** from ignition switch OFF position. • Does driver-side front window go down?	Yes	Go to next step.
		No	Replace power window main switch, then go to next step.
2	• Turn ignition switch to ON position. • In automatic mode, pull up power window main switch for driver-side front window. Window cannot go up within **approximately 4 seconds** from ignition switch OFF position. • Verify that driver-side front window does not operate. • Does driver-side front window go up?	Yes	Replace power window main switch, then go to next step.
		No	Go to next step.
3	• Turn ignition switch to ON position. • Lower driver-side front window completely. • Take a hammer and hold it against the inside of the top of the window frame so that the window will hit its handle when it is closing. • Raise the window using manual mode. • When the window hits the hammer handle, does it immediately reverse and go down to **approximately 200 mm {7.87 in}** from the completely raised position?	Yes	Go to next step.
		No	Replace power window main switch, then go to next step.
4	• Open any door. • Turn ignition switch to ON position. • Push/pull power window main switch for driver-side front window within **approximately 42 seconds** from ignition switch OFF position. • Verify that driver-side front window does not go up or down. • Does driver-side front window go up or down?	Yes	• Inspect door switch and related warning harness. • If above parts are okay, replace power window main switch, then go to next step. • If above parts are incorrect, repair or replace malfunction part(s), then go to next step.
		No	Go to next step.

STEP	INSPECTION		ACTION
5	• Close all doors. • Turn ignition switch to ON position. • Push/pull power window main switch for driver-side front window after **approximately 60 seconds** from ignition switch OFF position. • Verify that driver-side front window does not go up or down. • Does driver-side front window go up or down?	Yes	Replace power window main switch, then go to two-step down function inspection.
		No	• IG OFF timer function is normal. • Go to two-step down function inspection..

Two-step Down Function Inspection

- The distance the door glass opens can be changed using the two-step down function. (**Approximately 20-100 mm {0.79-3.93 in}**)
- The two-step down function can be made non-operative. (The function is operative at the initial setting.)
- The two-step down function does not function during IG OFF timer.

STEP	INSPECTION		ACTION
1	• Turn ignition switch to ON position. • Raise driver-side front window completely. • When the driver-side front window is lowered using manual mode, does it go down to approximately **30 mm {1.18 in}** from the completely closed position and stop for 1 second? (This inspection cannot be carried out during IG OFF timer function operation.)	Yes	• two-step down function is normal. • Recheck malfunction symptoms.
		No	Replace power window main switch.

TROUBLESHOOTING INDEX

A6E778058000W04

No.	TROUBLESHOOTING ITEM	PAGE
1	Driver-side front window does not go up and down in automatic mode.	(See S–123 NO. 1 DRIVER-SIDE FRONT WINDOW DOES NOT GO UP AND DOWN IN AUTOMATIC MODE.)
2	Driver-side front window does not reverse, even when encountering a foreign object in its path.	(See S–126 NO. 2 DRIVER-SIDE FRONT WINDOW DOES NOT REVERSE, EVEN WHEN ENCOUNTERING A FOREIGN OBJECT IN ITS PATH.)
3	Driver-side front window reverses even though the glass does not encounter a foreign object while it is going up in automatic mode.	(See S–127 NO. 3 DRIVER-SIDE FRONT WINDOW REVERSES EVEN THOUGH THE GLASS DOES NOT ENCOUNTER A FOREIGN OBJECT WHILE IT IS GOING UP IN AUTOMATIC MODE.)

S

NO. 1 DRIVER-SIDE FRONT WINDOW DOES NOT GO UP AND DOWN IN AUTOMATIC MODE

A6E778058000W05

1	Driver-side front window does not go up and down in automatic mode
POSSIBLE CAUSE	• Open or short to B+ circuit in position sensor 1 signal, ground signal from wiring harness (between power window main switch and driver-side front power window motor), inner power window main switch, or inner motor: Steps 3–6 • Open or short to B+/ground circuit in position sensor 2 signal from wiring harness (between power window main switch and driver-side front power window motor), inner power window main switch, or inner motor: Steps 7–11 **Note** • The automatic function and the ignition off timer function do not operate while power window main switch is in fail-safe mode. The fail-safe operates when position sensor 1, and/or position sensor 2, and/or position sensor 2 power supply malfunctions. • Position sensor 1 and/or 2 malfunction — When driver-side front window is kept up down, main switch can not sense a pulse signal from position sensor 1 during that can sense 5 pulses (2.5 cycles) from position 2. — When driver-side front window is kept up down, main switch can not sense a pulse signal from position sensor 2 during that can sense 5 pulses (2.5 cycles) from position 1. — There are 3 abnormal pulse from a pulse signal during driver-side front window is kept up or down. — There are 20 cycle pulses from a close position during driver-side front window is kept up. — There is no pulse signal during 1 sec. after down is operated.

Diagnostic procedure

STEP	INSPECTION		ACTION
1	**INSPECT WHETHER POWER WINDOW MAIN SWITCH ENTERS FAIL-SAFE MODE OR NOT** • Did driver-side front window go up or down in automatic mode?	Yes	Recheck malfunction symptoms.
		No	Go to next step. (Power window main switch may enter fail-safe mode.)
2	**VERIFY WHETHER MALFUNCTION IS IN WIRING HARNESS (BETWEEN POWER WINDOW MAIN SWITCH AND DRIVER-SIDE FRONT POWER WINDOW MOTOR) OR ELSEWHERE** • Turn ignition switch ON position. • Test voltage at power window main switch connector terminal 2C (position sensor 1 signal). • Is voltage alternate between **0 V** and **approximately 5 V** when driver-side front window is being gone up and down?	Yes	Go to Step 7.
		No	Go to next step.
3	**VERIFY POSITION SENSOR 1 OUTPUT SIGNAL** • Turn ignition switch to ON position. • Test voltage at driver-side front power window motor connector terminal H (position sensor 1 signal). • Is voltage alternate between **0 V** and **approximately 12 V** when driver-side front window is being gone up and down at manual mode?	Yes	Go to next step.
		No	Replace driver-side front power window motor, then go to Step 12.
4	**INSPECT WIRING HARNESS BETWEEN POWER WINDOW MAIN SWITCH AND DRIVER-SIDE FRONT POWER WINDOW MOTOR FOR CONTINUITY** • Turn ignition switch to LOCK position. • Disconnect power window main switch connector. • Is there continuity between the following power window main switch connector terminals and driver-side front power window motor connector terminals? — 2C–H (position sensor 1 signal) — 2D–E (position sensor power supply) — 2A–F (ground signal)	Yes	Go to next step.
		No	Repair wiring harness between power window main switch and driver-side front power window motor, then go to Step 12.
5	**VERIFY WHETHER MALFUNCTION IS IN WIRING HARNESS (BETWEEN POWER WINDOW MAIN SWITCH AND DRIVER-SIDE FRONT POWER WINDOW MOTOR) OR POWER WINDOW MAIN SWITCH** • Turn ignition switch to ON position. • Measure voltage at the following power window main switch connector terminals: — 2C (position sensor 1 signal) — 2A (ground signal) • Is voltage **approximately 12 V**?	Yes	Repair wiring harness between power window main switch and driver-side front power window motor, then go to Step 12.
		No	Replace power window main switch (open or short to B+ in power window main switch).
6	**VERIFY WHETHER MALFUNCTION IS IN WIRING HARNESS (BETWEEN POWER WINDOW MAIN SWITCH AND DRIVER-SIDE FRONT POWER WINDOW MOTOR) OR ELSEWHERE** • Is continuity between following power window main switch connector terminals and ground? — 2C (position sensor 1 signal) — 2D (position sensor power supply)	Yes	Replace wiring harness between power window main switch and driver-side front power window motor, then go to Step 12.
		No	Go to next step.

STEP	INSPECTION		ACTION
7	**VERIFY WHETHER MALFUNCTION IS IN POWER WINDOW MAIN SWITCH OR ELSEWHERE** • Turn ignition switch to ON position. • Test voltage at power window main switch connector terminal 2B (position sensor 2 signal). • Does voltage alternate between **0 V** and **approximately 12 V** when driver-side front window is being gone up down?	Yes	Replace power window main switch. (malfunction in power window main switch automatic mode control), then go to Step 11.
		No	Go to next step.
8	**VERIFY POSITION SENSOR 2 OUTPUT SIGNAL** • Turn ignition switch to ON position. • Test voltage at driver-side front power window motor connector terminal G (position sensor 2 signal). • Is voltage alternate between **0 V** and **approximately 12 V** when driver-side front window is being gone up down?	Yes	Go to next step.
		No	Replace driver-side front power window motor, then go to Step 12.
9	**VERIFY WHETHER MALFUNCTION IS IN WIRING HARNESS (BETWEEN POWER WINDOW MAIN SWITCH AND DRIVER-SIDE FRONT POWER WINDOW MOTOR) OR ELSEWHERE** • Turn ignition switch to LOCK position. • Disconnect power window main switch connector and driver-side front power window motor connector. • Is there continuity between power window main switch connector terminal 2B (position sensor 2 signal) and driver-side front power window motor connector terminal G (position sensor 2 signal)?	Yes	Go to next step.
		No	Repair wiring harness between power window main switch and driver-side front power window motor, then go to Step 12.
10	**VERIFY WHETHER MALFUNCTION IS IN WIRING HARNESS (BETWEEN POWER WINDOW MAIN SWITCH AND DRIVER-SIDE FRONT POWER WINDOW MOTOR) OR ELSEWHERE** • Is there continuity between power window main switch connector terminal 2B (position sensor 2 signal) and ground?	Yes	Repair wiring harness between power window main switch and driver-side front power window motor, then go to Step 12.
		No	Go to next step.
11	**VERIFY WHETHER MALFUNCTION IS IN WIRING HARNESS (BETWEEN POWER WINDOW MAIN SWITCH AND DRIVER-SIDE FRONT POWER WINDOW MOTOR) OR POWER WINDOW MAIN SWITCH** • Turn ignition switch to ON position. • Measure voltage at power window main switch connector terminal 2B (position sensor 2 signal). • Is voltage **approximately 12 V**?	Yes	Repair wiring harness between power window main switch and front driver-side power window motor, then go to next step.
		No	Replace power window main switch (open or short to B+/ ground in power window main switch), then go to next step.
12	**RECHECK MALFUNCTION SYMPTOM AFTER REPAIR** • Did malfunction disappear?	Yes	• Troubleshooting completed. • Explain repairs to customer.
		No	Recheck malfunction symptoms, then repeat from Step 1 if malfunction recurs.

S

NO. 2 DRIVER-SIDE FRONT WINDOW DOES NOT REVERSE, EVEN WHEN ENCOUNTERING A FOREIGN OBJECT IN ITS PATH

A6E778058000W06

2	**Driver-side front window does not reverse, even when encountering a foreign object in its path.**
POSSIBLE CAUSE	• Automatic window return range did not reset after battery disconnect: Step 2

Diagnostic procedure

STEP	INSPECTION		ACTION
1	**CHECK FOR CUSTOMER COMPLAINT** • Did customer complain that driver-side front window did not reverse when nearing complete close?	Yes	• System normal. • Explain to customer that automatic window return power window system does not operate when nearing of complete close.
		No	Go to next step.
2	**RESET REVERSE AREA STORED IN DRIVER-SIDE FRONT WINDOW MOTOR** • Reset the main switch to recognize driver-side front window fully closed position. • Did malfunction disappear?	Yes	• Troubleshooting completed. • Explain to customer that misadjustment of automatic window return range was the problem.
		No	Replace power window main switch.

NO. 3 DRIVER-SIDE FRONT WINDOW REVERSES EVEN THOUGH THE GLASS DOES NOT ENCOUNTER A FOREIGN OBJECT WHILE IT IS GOING UP IN AUTOMATIC MODE

A6E778058000W07

3	**Driver-side front window reverses even though the glass does not encounter a foreign object while it is going up in automatic mode.**
POSSIBLE CAUSE	• Too much driver-side front window friction resistance: Steps 1–5 • Short to ground in position sensor 1 signal from wiring harness (between power window main switch and driver-side front power window motor), inner driver-side front power window motor, or inner power window main switch: Steps 6, 7

Diagnostic procedure

STEP	INSPECTION		ACTION
1	**INSPECT FOR FOREIGN OBJECT IN DRIVER-SIDE FRONT WINDOW** • Is there a foreign object in driver-side front window?	Yes	Remove the object.
		No	Go to next step.
2	**INSPECT ACRYLIC VISOR BRACKET INSTALLATION** • Is acrylic visor bracket properly installed?	Yes	Go to next step.
		No	Reinstall acrylic visor bracket properly.
3	**INSPECT TO SEE IF GLASS RUN CHANNEL INTERFERES WITH DRIVER-SIDE FRONT WINDOW** • Remove driver-side front door trim. • Does glass run channel interfere with driver-side front window?	Yes	Repair or replace glass run channel, then go to Step 9.
		No	Go to next step.
4	**INSPECT LUBRICANT ON DRIVER-SIDE CARRIER PLATE** • Is there lubricant on driver-side carrier plate?	Yes	Go to next step.
		No	Apply lubricant (mineral oil).
5	**INSPECT INSTALLATION OF DRIVER-SIDE FRONT POWER WINDOW SYSTEM COMPONENTS** • Are the following parts properly installed? — Driver-side front door glass — Driver-side power window motor wire — Driver-side power window motor — Driver-side power window regulator frame — Driver-side carrier plate — Driver-side glass run channel	Yes	Go to next step.
		No	Reinstall part(s) properly, then go to Step 9.
6	**VERIFY POSITION SENSOR 1 OUTPUT SIGNAL** • Turn ignition switch to ON position. • Test voltage at driver-side front power window motor connector terminal H (position sensor 1 signal). • Is voltage alternate between **0 V** and **approximately 12 V** when driver-side front window is being gone up and down at manual mode?	Yes	Go to next step.
		No	Replace driver-side front power window motor, then go to Step 8.
7	**VERIFY WHETHER MALFUNCTION IS IN WIRING HARNESS (BETWEEN POWER WINDOW MAIN SWITCH AND DRIVER-SIDE FRONT POWER WINDOW MOTOR) OR POWER WINDOW MAIN SWITCH** • Turn ignition switch to LOCK position. • Disconnect power window main switch. • Is there continuity between power window main switch connector terminal 2C (position sensor 1 signal) and ground?	Yes	Repair wiring harness between power window main switch and driver-side front power window motor, then go to next step.
		No	Replace power window main switch (short to ground in power window main switch), then go to next step.
8	**RECHECK MALFUNCTION SYMPTOM AFTER REPAIR** • Did malfunction disappear?	Yes	• Troubleshooting completed. • Explain repairs to customer.
		No	Recheck malfunction symptoms, then repeat from Step 1 if malfunction recurs.

S

TROUBLESHOOTING [KEYLESS ENTRY SYSTEM]

FOREWORD

A6E778269000W01

- Go to troubleshooting after identifying the specific malfunction by doing a keyless entry system preliminary inspection.

Flowchart

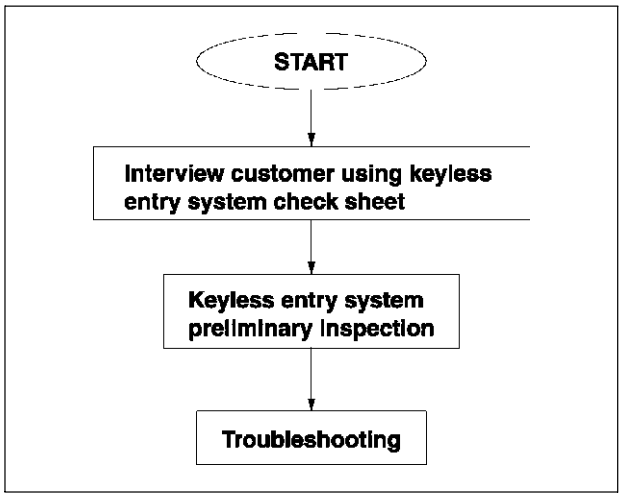

A6E7782W002

KEYLESS ENTRY SYSTEM CHECK SHEET

A6E778269000W02

- Use the sheet below as a customer interview sheet when accepting a vehicle for service.
- If the symptom is “Power door lock system does not operate with transmitter at all,” find out how the customer uses the keyless entry system by following the check sheet below.

Perform the following inspection with customer.
Q1. What's the customer's complaint?
- ☐ Power door lock system does not operate with transmitter (door does not lock/unlock).
- ☐ Other

Q2. Is system factory-installed or after-market?
- ☐ Factory-installed system
  - → GO to Q3.
- ☐ After-market system
  - → Perform troubleshooting according to after-market keyless entry system manual.

Q3. Operate transmitter with customer from 2.5 m {8.2 ft} away from center of vehicle. (Make sure the ignition key is either in the LOCK position or removed.)
Does keyless entry system work?
- ☐ Yes
  - → Explain the following to the customer.
    - Keyless entry system does not work when ignition switch is in ON position.
    - Keyless entry system does not work form excessive distances (more than 2.5 m {8.2 ft} away from center of vehicle).
- ☐ No
  - → Go to Q4.

Q4. Check location where customer uses keyless entry system.
Does a particular area, such as being near TV towers, power plants, power lines, or factories, have an effect on malfunction?
- ☐ Yes Place
  - → Area of operation is bad. Explain effect of outside interference on transmitter to customer.
- ☐ No
  - → Go to Q5.

Q5. Make sure there are no after-market electrical parts installed on vehicle.
Are there any of the following present?
- Cellular phone
- Radio-wave equipment
- Remote engine starter
- TV, ect.

- ☐ Yes Parts
- ☐ No

Perform the keyless entry system preliminary inspection.

A6E7782W001

KEYLESS ENTRY SYSTEM PRELIMINARY INSPECTION

A6E778269000W03

- Perform the following preliminary inspection before troubleshooting.

STEP	INSPECTION		ACTION
1	• Is system an after-market one?	Yes	Perform troubleshooting according to after-market keyless entry system manual.
		No	Go to next step.
2	• Did customer activate keyless entry system when ignition switch was in LOCK position?	Yes	Go to next step.
		No	• Explain to customer that system does not work when ignition is in ON position. • Turn ignition switch to LOCK position, then go to next step.

S

STEP	INSPECTION		ACTION
3	• Did customer use keyless entry system in particular area, such as being near TV towers, power plants, power lines, or factories?	Yes	Attempt to lock/unlock doors with transmitter in non-interference area. **If system operates:** • Area of operation is bad. Explain effect of outside interference on transmitter to customer. **If system does not operate:** • Go to next step.
		No	Go to next step.
4	• Are any of the following after-market electrical parts on the vehicle? — Cellular phone — Radio-wave equipment — Remote engine starter — TV, etc.	Yes	Disconnect after-market electrical part connectors and attempt to lock/unlock doors with transmitter. **If system operates:** • After-market electrical parts are interfering with keyless entry system. **If system does not operate:** • Go to next step.
		No	Go to next step.
5	• Perform on-board diagnostic function. (See S–130 ON-BOARD DIAGNOSTIC FUNCTION.) • Does on-board diagnostic function work?	Yes	Go to next step.
		No	• Go to Step 1 of NO. 1 ONE OR MORE ON-BOARD DIAGNOSTIC FUNCTIONS INOPERATIVE. • Go to Step 1 of NO. 2 ALL ON-BOARD DIAGNOSTIC FUNCTIONS INOPERATIVE.
6	• Attempt to reprogram transmitter ID code. • Can transmitter ID code be reprogrammed?	Yes	System is normal now.
		No	Go to Step 1 of troubleshooting NO. 3 TRANSMITTER ID CODE CANNOT BE REPROGRAMMED.

ON-BOARD DIAGNOSTIC FUNCTION

A6E778269000W04

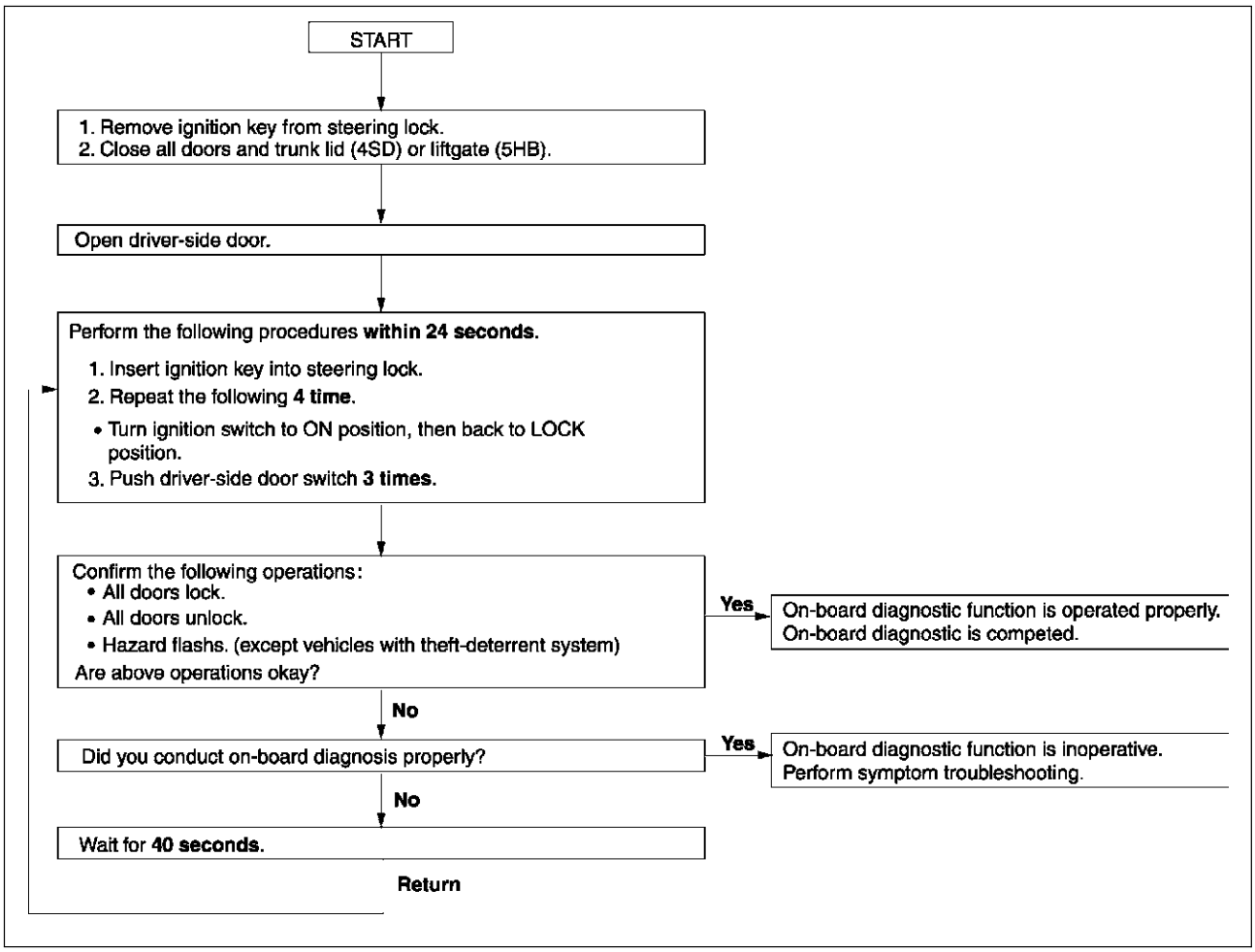

A6E7782W003

TROUBLESHOOTING INDEX

A6E778269000W05

No.	TROUBLESHOOTING ITEM	DESCRIPTION	PAGE
1	One or more on-board diagnostic functions inoperative.	• Malfunction in hazard warning light system (except vehicle with theft-deterrent system), or door lock linkage system, driver's door key cylinder switch system.	(See S–131 NO. 1 ONE OR MORE ON-BOARD DIAGNOSTIC FUNCTIONS INOPERATIVE)
2	All on-board diagnostic functions inoperative.	• Malfunction in door lock timer unit power supply circuit, door switch circuit, cargo compartment light circuit or door lock timer unit ground circuit.	(See S–132 NO. 2 ALL ON-BOARD DIAGNOSTIC FUNCTIONS INOPERATIVE)
3	Transmitter ID code cannot be reprogrammed.	• Malfunction in transmitter battery, transmitter, door lock timer unit bracket, door lock timer unit bracket ground screw or door lock timer unit circuit.	(See S–133 NO. 3 TRANSMITTER ID CODE CANNOT BE REPROGRAMMED)

NO. 1 ONE OR MORE ON-BOARD DIAGNOSTIC FUNCTIONS INOPERATIVE

A6E778269000W06

- When performing an asterisked (*) troubleshooting inspection, shake the wiring harness and connectors while doing the inspection to discover whether poor contact points are the cause of any intermittent malfunctions. If there is a problem, check to make sure connectors, terminals and wiring harnesses are connected correctly and undamaged.

1	One or more on-board diagnostic functions inoperative
DESCRIPTION	• Malfunction in hazard warning light system, or door lock linkage system, driver's door key cylinder switch system.
POSSIBLE CAUSE	• Malfunction in hazard warning light system — Hazard warning light circuit — Door lock timer unit malfunction — Malfunction in wiring harness between door lock timer unit and flasher unit • Malfunction in door lock linkage • Malfunction in door lock timer unit door lock/unlock signal circuit — Door lock timer unit malfunction

S

Diagnostic procedure

Note
- For with theft-deterrent system, follow the procedure from Step 4.

STEP	INSPECTION		ACTION
1	**INSPECT HAZARD WARNING LIGHT OPERATION DURING ON-BOARD DIAGNOSIS** • Did hazard warning lights flash during on-board diagnostic function operation?	Yes	Go to Step 4.
		No	Go to next step.
2	**INSPECT HAZARD WARNING LIGHT CIRCUIT** • Do hazard warning lights flash when hazard warning switch is on?	Yes	Go to next step.
		No	Inspect hazard warning light circuit.
*3	**CHECK TO SEE WHETHER MALFUNCTION IS IN WIRING HARNESS (BETWEEN DOOR LOCK TIMER UNIT AND FLASHER UNIT) OR DOOR LOCK TIMER UNIT** • Measure voltage at door lock timer unit connector terminal I (24 pin) during on-board diagnostic function operation. — When hazard warning light flashed: **B+⇔below 1.0 V** • Is voltage as above?	Yes	Recheck malfunction symptoms, then repeat from Step 1 if malfunction reoccurs.
		No	• Inspect wiring harness between door lock timer unit and flasher unit. — If wiring harness is OK, replace door lock timer unit and reprogram transmitter ID code, then go to Step 7. — If wiring harness malfunction, repair wiring harness, then go to Step 7.
4	**MAKE SURE THAT ALL DOORS LOCK AND UNLOCK DURING ON-BOARD DIAGNOSIS** • Did all doors unlock and lock during on-board diagnostic function operation?	Yes	Recheck malfunction symptoms, then repeat from Step 1 if malfunction reoccurs.
		No	Go to next step.
5	**INSPECT DOOR LOCK LINKAGE** • Operate door lock knob and make sure door locks and unlocks manually. • Does every door lock system work?	Yes	Go to next step.
		No	Inspect door lock linkage.

STEP	INSPECTION		ACTION
*6	**CHECK TO SEE WHETHER MALFUNCTION IS IN DOOR LOCK ACTUATOR, DOOR LOCK TIMER UNIT GROUND CIRCUIT OR ELSEWHERE** • Measure voltage at door lock timer unit connector terminal C, D (6 pin) during on-board diagnostic function operation. — All door locked: **below 1.0 V→B+→below 1.0 V** (terminal D, 6 pin) — All door unlocked: **B+→below 1.0 V→B+** (terminal C, 6 pin) • Is voltage as above?	Yes	Recheck malfunction symptoms, then repeat from Step 1 if malfunction reoccurs.
		No	• Inspect door lock timer unit connector. • Inspect wiring harness between door lock timer unit and door lock actuator. — If above parts are OK, go to next step. — If above parts malfunction, repair malfunction part.
7	**RECHECK MALFUNCTION SYMPTOM AFTER REPAIR** • Does keyless entry system operate properly?	Yes	Troubleshooting completed. Explain repairs to customer.
		No	Recheck malfunction symptoms, then repeat from Step 1 if malfunction reoccurs.

NO. 2 ALL ON-BOARD DIAGNOSTIC FUNCTIONS INOPERATIVE

A6E778269000W07

- When performing an asterisked (*) troubleshooting inspection, shake the wiring harness and connectors while doing the inspection to discover whether poor contact points are the cause of any intermittent malfunctions. If there is a problem, check to make sure connectors, terminals and wiring harnesses are connected correctly and undamaged.

2	All on-board diagnostic functions inoperative
DESCRIPTION	• Malfunction in door lock timer unit power supply circuit, door switch circuit, cargo compartment light circuit or door lock timer unit ground circuit.
POSSIBLE CAUSE	• Malfunction in IG1, B+ signal circuit of door lock timer unit — Door lock timer unit power supply fuse malfunction — Malfunction in wiring harness between door lock timer unit power supply fuse(s) and door lock timer unit itself • Malfunction in door lock timer unit's door open/closed signal circuit — Door switch system malfunction — Door lock timer unit malfunction — Malfunction in wiring harness between door lock timer unit and door switch • Malfunction in door lock timer unit's liftgate or trunk lid open/closed signal circuit — Cargo compartment light switch system malfunction — Door lock timer unit malfunction — Malfunction in wiring harness between door lock timer unit and cargo compartment light switch • Malfunction in door lock timer unit GND signal circuit — Malfunction in wiring harness between door lock timer unit and ground

Diagnostic procedure

STEP	INSPECTION		ACTION
1	**INSPECT DOOR LOCK TIMER UNIT POWER SUPPLY FUSES** • Are door lock timer unit power supply fuses okay?	Yes	Go to next step.
		No	Check for a short to ground on blown fuse's circuit. Repair or replace as necessary. Install appropriate amperage fuse.
2	**INSPECT DOOR SWITCH INSTALLATION** • Are door switches installed securely?	Yes	Go to next step.
		No	Install door switch(es) securely, then go back to Step 5 of keyless entry system preliminary inspection.
*3	**CHECK TO SEE WHETHER MALFUNCTION IS IN WIRING HARNESS (LACK OF CONTINUITY BETWEEN FUSE BLOCK AND DOOR LOCK TIMER UNIT) OR ELSEWHERE** • Turn ignition switch to ON position. • Measure voltage at following door lock timer unit terminals: — IG1 signal (Terminal B (24 pin)) — B+ signal (Terminal A (24 pin)) • Is voltage **B+**?	Yes	Go to next step.
		No	Repair wiring harness between fuse block and door lock timer unit, then go to Step 8.

STEP	INSPECTION		ACTION
*4	**CHECK TO SEE WHETHER MALFUNCTION IS IN WIRING HARNESS (SHORT TO B+ BETWEEN FUSE BLOCK AND DOOR LOCK TIMER UNIT, OR BETWEEN DOOR LOCK TIMER UNIT AND GROUND) OR ELSEWHERE** • Turn ignition switch to LOCK position. • Disconnect door lock timer unit connector. • Measure voltage at following door lock timer unit connector terminals: — IG1 signal (Terminal B (24 pin)) • Is voltage **B+**?	Yes	Repair malfunctioning wiring harness, then go to Step 8.
		No	Go to next step.
*5	**CHECK TO SEE WHETHER MALFUNCTION IS IN WIRING HARNESS (LACK OF CONTINUITY BETWEEN DOOR LOCK TIMER UNIT AND GROUND) OR ELSEWHERE** • Is there continuity between door lock timer unit connector terminal W (24 pin) and ground?	Yes	Go to next step.
		No	Repair wiring harness between door lock timer unit and ground, then go to Step 8.
6	**INSPECT FOR CHECK CODE 04 IN INSTRUMENT CLUSTER** • Inspect door switch using instrument cluster input/output check mode. (See Section T) • Does DTC 04 function properly?	Yes	Go to next step.
		No	Repair door switch system using DTC 04 inspection procedure, then go to Step 8.
7	**INSPECT DOOR LOCK TIMER UNIT OR WIRING HARNESS (BETWEEN DOOR LOCK TIMER UNIT AND DOOR SWITCHES, CARGO COMPARTMENT LIGHT SWITCH FOR CONTINUITY)** • Open the driver-side door. • Is there continuity between door lock timer unit connector terminal K, G (24 pin) and ground?	Yes	Replace door lock timer unit and reprogram door lock timer unit ID code, then go to next step.
		No	Repair wiring harness between door lock timer unit and door switch(es), cargo compartment light switch then go to next step.
8	**RECHECK MALFUNCTION SYMPTOM AFTER REPAIR** • Does keyless entry system operate properly?	Yes	Troubleshooting completed. Explain repairs to customer.
		No	Recheck malfunction symptoms, then repeat from Step 1 if malfunction reoccurs.

S

NO. 3 TRANSMITTER ID CODE CANNOT BE REPROGRAMMED

A6E778269000W08

3	**Transmitter ID code cannot be reprogrammed**
DESCRIPTION	• Malfunction in transmitter battery, transmitter door lock timer unit bracket, door lock timer unit bracket ground screw or door lock timer unit circuit.
POSSIBLE CAUSE	• Malfunction in transmitter battery, transmitter, door lock timer unit bracket, door lock timer unit bracket ground screw or door lock timer unit circuit — Transmitter battery, transmitter, door lock timer unit bracket, door lock timer unit bracket ground screw or door lock timer unit malfunction

Diagnostic procedure

STEP	INSPECTION		ACTION
1	**INSPECT TRANSMITTER BATTERY INSTALLATION AND TYPE** • Visually inspect transmitter battery. • Are below items okay? — Transmitter battery installation (correct polarity) — Battery type (CR2025)	Yes	Go to next step.
		No	Set transmitter battery properly or replace with specified transmitter battery (CR2025), then go to Step 8.
2	**INSPECT TRANSMITTER BATTERY TERMINALS FOR RUST AND POOR CONNECTION** • Visually inspect transmitter. — Is there rust on transmitter battery terminals (positive or negative pole)? — Is there poor connection between terminals and battery?	Yes	Replace transmitter battery or repair transmitter battery terminal, then go to Step 8.
		No	Go to next step.

STEP	INSPECTION		ACTION
3	**INSPECT TRANSMITTER BATTERY** • Inspect transmitter battery. • Is battery voltage normal?	Yes	Go to next step.
		No	Replace transmitter battery, then go to Step 8.
4	**INSPECT DOOR LOCK TIMER UNIT BRACKET INSTALLATION** • Is door lock timer unit bracket installed securely?	Yes	Go to next step.
		No	Install bracket securely, then go back to Step 6 of keyless entry system preliminary inspection.
5	**INSPECT GROUND SCREW INSTALLATION BETWEEN DOOR LOCK TIMER UNIT AND DOOR LOCK TIMER UNIT BRACKET** • Are door lock timer unit and door lock timer unit bracket connected securely to ground screw?	Yes	Go to next step.
		No	Install screw securely, then go back to Step 6 of keyless entry system preliminary inspection.
6	**CHECK TO SEE WHETHER MALFUNCTION IS IN TRANSMITTER BATTERY OR ELSEWHERE** • Replace with a known good transmitter battery. • Does keyless entry system operate properly?	Yes	Replace transmitter battery, then go to Step 8.
		No	Go to next step.
7	**CHECK TO SEE WHETHER MALFUNCTION IS IN TRANSMITTER OR DOOR LOCK TIMER UNIT** • Reprogram door lock timer unit ID code by using another known good transmitter. • Does keyless entry system operate okay?	Yes	Replace transmitter and reprogram transmitter ID code, then go to next step.
		No	Replace door lock timer unit and reprogram door lock timer unit ID code, then go to next step.
8	**RECHECK MALFUNCTION SYMPTOM AFTER REPAIR** • Does keyless entry system operate properly?	Yes	Troubleshooting completed. Explain repairs to customer.
		No	Recheck malfunction symptoms, then repeat from Step 1 if malfunction reoccurs.

BODY ELECTRICAL SYSTEM

LOCATION INDEX T-5
POWER SYSTEM T-5
EXTERIOR LIGHTING SYSTEM T-6
INTERIOR LIGHTING SYSTEM T-9
WIPER AND WASHER SYSTEM T-10
WARNING AND INDICATOR SYSTEM T-12
THEFT-DETERRENT SYSTEM T-13
IMMOBILIZER SYSTEM T-14
AUDIO AND NAVIGATION SYSTEM T-15
CRUISE CONTROL SYSTEM T-17
AIR BAG SYSTEM T-18
POWER SYSTEM T-19
FUSE SERVICE CAUTION T-19
MAIN FUSE REMOVAL/INSTALLATION T-19
FUSE BLOCK REMOVAL/INSTALLATION T-20
IGNITION SWITCH REMOVAL/INSTALLATION T-20
IGNITION SWITCH INSPECTION T-20
KEY REMINDER SWITCH REMOVAL/INSTALLATION T-21
KEY REMINDER SWITCH INSPECTION T-21
CIGARETTE LIGHTER REMOVAL/INSTALLATION T-21
CIGARETTE LIGHTER INSPECTION T-22
RELAY LOCATION T-23
RELAY INSPECTION T-24
EXTERIOR LIGHTING SYSTEM T-25
DISCHARGE HEADLIGHT SERVICE WARNINGS T-25
FRONT COMBINATION LIGHT REMOVAL/INSTALLATION T-26
HEADLIGHT AIMING T-26
HEADLIGHT BULB REMOVAL/INSTALLATION T-28
DISCHARGE HEADLIGHT CONTROL UNIT REMOVAL/INSTALLATION T-30
AUTO LEVELING CONTROL UNIT CONFIGURATION T-30
HEADLIGHT ZEROSET T-31
FRONT AUTO LEVELING SENSOR REMOVAL/INSTALLATION T-32
REAR AUTO LEVELING SENSOR REMOVAL/INSTALLATION T-32
PARKING LIGHT BULB REMOVAL/INSTALLATION T-33
FRONT TURN LIGHT REMOVAL/INSTALLATION T-33
FRONT SIDE TURN LIGHT REMOVAL/INSTALLATION T-33
FRONT FOG LIGHT AIMING T-34
FRONT FOG LIGHT BULB REMOVAL/INSTALLATION T-34
REAR COMBINATION LIGHT REMOVAL/INSTALLATION T-35
INBOARD COMBINATION LIGHT REMOVAL/INSTALLATION T-35
HIGH-MOUNT BRAKE LIGHT REMOVAL/INSTALLATION T-36
LICENSE PLATE LIGHT REMOVAL/INSTALLATION T-37
COMBINATION SWITCH REMOVAL/INSTALLATION T-37
COMBINATION SWITCH DISASSEMBLY/ASSEMBLY T-38
STEERING ANGLE SENSOR INSPECTION T-39
LIGHT SWITCH REMOVAL/INSTALLATION T-39
LIGHT SWITCH INSPECTION T-40
HAZARD WARNING SWITCH INSPECTION T-41
FRONT AND REAR FOG LIGHT SWITCH INSPECTION T-42
HEADLIGHT LEVELING SWITCH REMOVAL/INSTALLATION T-43
HEADLIGHT LEVELING SWITCH INSPECTION T-43
BACK-UP LIGHT SWITCH REMOVAL/INSTALLATION T-43
BACK-UP LIGHT SWITCH INSPECTION T-44
FLASHER UNIT REMOVAL/INSTALLATION T-44
FLASHER UNIT INSPECTION T-44
RUNNING LIGHT UNIT REMOVAL/INSTALLATION T-45
RUNNING LIGHT UNIT INSPECTION T-46
INTERIOR LIGHTING SYSTEM T-48
FRONT MAP LIGHT REMOVAL/INSTALLATION T-48
FRONT MAP LIGHT INSPECTION T-48
REAR MAP LIGHT REMOVAL/INSTALLATION T-49
REAR MAP LIGHT INSPECTION T-49
CARGO COMPARTMENT LIGHT REMOVAL/INSTALLATION T-50
CARGO COMPARTMENT LIGHT INSPECTION T-50
CARGO COMPARTMENT LIGHT SWITCH INSPECTION T-50
TRUNK COMPARTMENT LIGHT BULB REMOVAL/INSTALLATION T-51
TRUNK COMPARTMENT LIGHT SWITCH INSPECTION T-51
COURTESY LIGHT BULB REMOVAL/INSTALLATION T-51
DOOR SWITCH REMOVAL/INSTALLATION T-52
DOOR SWITCH INSPECTION T-52
ASHTRAY ILLUMINATION BULB REMOVAL/INSTALLATION T-52
IGNITION KEY ILLUMINATION BULB REMOVAL/INSTALLATION T-53
GLOVE COMPARTMENT LIGHT BULB REMOVAL/INSTALLATION T-53
PANEL LIGHT CONTROL SWITCH REMOVAL/INSTALLATION T-53

PANEL LIGHT CONTROL SWITCH INSPECTION T-54
WIPER AND WASHER T-56
WINDSHIELD WIPER MOTOR REMOVAL/INSTALLATION T-56
WINDSHIELD WIPER MOTOR DISASSEMBLY/ASSEMBLY T-56
WINDSHIELD WIPER MOTOR INSPECTION T-56
WINDSHIELD WIPER ARM AND BLADE REMOVAL/INSTALLATION T-57
WINDSHIELD WIPER ARM AND BLADE ADJUSTMENT T-58
WASHER TANK REMOVAL/INSTALLATION T-58
WINDSHIELD WASHER MOTOR REMOVAL/INSTALLATION T-59
WINDSHIELD WASHER MOTOR INSPECTION T-59
WASHER FLUID-LEVEL SENSOR REMOVAL/INSTALLATION T-59
WASHER FLUID-LEVEL SENSOR INSPECTION T-60
WINDSHIELD WASHER NOZZLE REMOVAL/INSTALLATION T-60
WINDSHIELD WASHER NOZZLE CLEANING T-60
WINDSHIELD WASHER HOSE REMOVAL/INSTALLATION T-61
REAR WASHER MOTOR REMOVAL/INSTALLATION T-61
REAR WASHER MOTOR INSPECTION T-61
REAR WIPER MOTOR REMOVAL/INSTALLATION T-62
REAR WIPER MOTOR INSPECTION T-62
REAR WIPER ARM AND BLADE REMOVAL/INSTALLATION T-63
REAR WIPER ARM AND BLADE ADJUSTMENT T-64
REAR WASHER NOZZLE REMOVAL/INSTALLATION T-64
REAR WASHER NOZZLE ADJUSTMENT T-64
REAR WASHER NOZZLE CLEANING T-64
REAR WASHER HOSE REMOVAL/INSTALLATION T-65
INTERMITTENT REAR WIPER RELAY REMOVAL/INSTALLATION T-66
INTERMITTENT REAR WIPER RELAY INSPECTION T-66
WIPER AND WASHER SWITCH REMOVAL/INSTALLATION T-67
WIPER AND WASHER SWITCH INSPECTION T-68
HEADLIGHT CLEANER MOTOR REMOVAL/INSTALLATION T-69
HEADLIGHT CLEANER MOTOR INSPECTION T-70
HEADLIGHT CLEANER NOZZLE REMOVAL/INSTALLATION T-70
HEADLIGHT CLEANER NOZZLE ADJUSTMENT T-70
HEADLIGHT CLEANER NOZZLE CLEANING T-70
HEADLIGHT CLEANER HOSE REMOVAL/INSTALLATION T-71
HEADLIGHT CLEANER SWITCH REMOVAL/INSTALLATION T-71
HEADLIGHT CLEANER SWITCH INSPECTION T-71
WARNING AND INDICATOR SYSTEM T-72
INSTRUMENT CLUSTER REMOVAL/INSTALLATION T-72
INSTRUMENT CLUSTER CONFIGURATION T-72
INSTRUMENT CLUSTER DISASSEMBLY/ASSEMBLY T-73
INSTRUMENT CLUSTER INSPECTION T-73
INSTRUMENT CLUSTER REPAIR T-74
INSTRUMENT CLUSTER INPUT/OUTPUT CHECK MODE T-75
PID/DATA MONITOR AND RECORD PROCEDURE T-83
FUEL GAUGE SENDER UNIT INSPECTION T-83
OIL PRESSURE SWITCH INSPECTION T-84
HORN REMOVAL/INSTALLATION T-84
INFORMATION DISPLAY REMOVAL/INSTALLATION T-84
THEFT-DETERRENT SYSTEM T-85
BONNET SWITCH INSPECTION T-85
THEFT-DETERRENT CONTROL MODULE REMOVAL/INSTALLATION T-86
THEFT-DETERRENT CONTROL MODULE INSPECTION T-86
INTRUDER SENSOR REMOVAL/INSTALLATION T-89
THEFT-DETERRENT SIREN REMOVAL/INSTALLATION T-89
IMMOBILIZER SYSTEM T-90
COIL REMOVAL/INSTALLATION T-90
IMMOBILIZER SYSTEM REPROGRAM PROCEDURE T-90
AUDIO AND NAVIGATION SYSTEM T-93
ANTI-THEFT SYSTEM T-93
CENTER PANEL MODULE REMOVAL/INSTALLATION T-96
CENTER PANEL MODULE DISASSEMBLY/ASSEMBLY T-97
AUDIO UNIT DISASSEMBLY/ASSEMBLY T-97
CAR-NAVIGATION UNIT REMOVAL/INSTALLATION T-98
LCD UNIT REMOVAL/INSTALLATION T-98
AUDIO CONTROL SWITCH REMOVAL/INSTALLATION T-99
AUDIO CONTROL SWITCH INSPECTION T-100
AUDIO AMPLIFIER REMOVAL/INSTALLATION T-100
FRONT DOOR SPEAKER REMOVAL/INSTALLATION T-101
FRONT DOOR SPEAKER INSPECTION T-101
REAR DOOR SPEAKER REMOVAL/INSTALLATION T-102
REAR DOOR SPEAKER INSPECTION T-102
TWEETER REMOVAL/INSTALLATION T-103
TWEETER INSPECTION T-103
WOOFER REMOVAL/INSTALLATION T-103
WOOFER INSPECTION T-104

NOISE FILTER
REMOVAL/INSTALLATION T-104
NOISE FILTER INSPECTION T-105
CONDENSER
REMOVAL/INSTALLATION T-106
CENTER ROOF ANTENNA
REMOVAL/INSTALLATION T-107
CENTER ROOF ANTENNA
INSPECTION T-107
GLASS ANTENNA INSPECTION T-107
GPS ANTENNA
REMOVAL/INSTALLATION T-108
ANTENNA FEEDER LOCATION T-108
FRONT ANTENNA FEEDER INSPECTION T-109
REAR ANTENNA FEEDER INSPECTION T-109
CRUISE CONTROL SYSTEM T-110
CRUISE ACTUATOR
REMOVAL/INSTALLATION T-110
CRUISE ACTUATOR INSPECTION T-110
ACTUATOR CABLE REMOVAL T-112
ACTUATOR CABLE INSTALLATION T-114
CRUISE CONTROL SWITCH
REMOVAL/INSTALLATION T-115
CRUISE CONTROL SWITCH
INSPECTION T-116
AIR BAG SYSTEM T-117
SERVICE WARNINGS T-117
DRIVER-SIDE AIR BAG MODULE
REMOVAL/INSTALLATION T-120
PASSENGER-SIDE AIR BAG MODULE
REMOVAL/INSTALLATION T-121
SIDE AIR BAG MODULE
REMOVAL/INSTALLATION T-121
CURTAIN AIR BAG MODULE
REMOVAL/INSTALLATION T-122
CRASH ZONE SENSOR
REMOVAL/INSTALLATION T-123
SIDE AIR BAG SENSOR
REMOVAL/INSTALLATION T-123
SAS UNIT REMOVAL/INSTALLATION T-124
SAS UNIT CONFIGURATION T-124
CLOCK SPRING
REMOVAL/INSTALLATION T-125
CLOCK SPRING ADJUSTMENT T-125
CLOCK SPRING INSPECTION T-126
PASSENGER-SIDE AIR BAG CUT-OFF
INDICATOR LIGHT
REMOVAL/INSTALLATION T-127
AIR BAG MODULE AND
PRE-TENSIONER SEAT BELT
DEPLOYMENT PROCEDURES T-127
AIR BAG MODULE AND
PRE-TENSIONER SEAT BELT
DISPOSAL PROCEDURES T-139
INSPECTION OF SST
(DEPLOYMENT TOOL) T-140
ON-BOARD DIAGNOSTIC [MULTIPLEX COMMUNICATION SYSTEM] T-141
MULTIPLEX COMMUNICATION
SYSTEM T-141
DTC TABLE T-142
PID/DATA MONITOR TABLE T-142
PROCEDURES FOR DETERMINING
THE LOCATION OF A MALFUNCTION T-142
DTC U0073, U1900, U2516 ..... T-144
ON-BOARD DIAGNOSTIC [HEADLIGHT AUTO LEVELING SYSTEM] T-147
FOREWORD T-147
DTC TABLE T-148
DTC B1342 ..... T-148
DTC B2141, B2477 ..... T-148
DTC B2390 ..... T-149
DTC B2607 ..... T-151
DTC B2615 ..... T-153
DTC B2616 ..... T-155
DTC B2619 ..... T-157
DTC B2626, B2477 ..... T-158
DTC B2735 ..... T-159
ON-BOARD DIAGNOSTIC [IMMOBILIZER SYSTEM] T-160
FOREWORD T-160
DTC TABLE T-160
DTC B1681 ..... T-161
DTC B2103 ..... T-162
DTC B1600 ..... T-163
DTC B2431 ..... T-163
DTC B1602 ..... T-163
DTC B1601 ..... T-164
DTC B1213 ..... T-164
DTC B1342 ..... T-164
ON-BOARD DIAGNOSTIC [AUDIO] T-165
STARTING PROCEDURE FOR
ON-BOARD DIAGNOSTIC
TEST MODE T-165
SUPPLIER IDENTIFICATION
PROCEDURE T-165
DTC CLEARING PROCEDURE T-166
DTC TABLE T-166
DTC 09:ER22 ..... T-166
DTC 09:ER20 ..... T-167
DTC 00:ER10 ..... T-168
DTC 03:ER10 ..... T-168
DTC 05:ER10 ..... T-169
DTC 06:ER10 ..... T-169
DTC 07:ER10 ..... T-170
DTC 03:ER01 ..... T-170
DTC 03:ER02 ..... T-170
DTC 03:ER07 ..... T-171
DTC 00:ER01 ..... T-171
DTC 00:ER03 ..... T-172
DTC 00:ER04 ..... T-172
DTC 05:ER01 ..... T-172
DTC 05:ER07 ..... T-173
DTC 06:ER01 ..... T-173
DTC 06:ER02 ..... T-174
DTC 06:ER07 ..... T-174
DTC 07:ER01 ..... T-175
DTC 07:ER02 ..... T-175
DTC 07:ER07 ..... T-176
DIAGNOSTIC ASSIST FUNCTION T-176
ON-BOARD DIAGNOSTIC [CRUISE CONTROL SYSTEM] T-179
FOREWORD T-179
INSPECTION OF DTCS
FOR OPERATION MODE T-179
DTC 21 ..... T-181
DTC 22 ..... T-181
DTC 31 ..... T-182

DTC 35 ..... T-183
DTC 37 ..... T-184
INSPECTION OF DTCS
FOR CONDITION DETECTION MODE T-185
DTC 01 ..... T-186
DTC 05 ..... T-186
DTC 07 ..... T-186
DTC 11 ..... T-187
DTC 12 ..... T-187
DTC 13 ..... T-188
DTC 15 ..... T-188
ON-BOARD DIAGNOSTIC [AIR BAG SYSTEM] T-189
FOREWORD T-189
DTC TABLE T-192
PID/DATA MONITOR TABLE T-195
ACTIVE COMMAND MODE TABLE T-197
DTC B1231 ..... T-198
DTC B1342 ..... T-198
DTC B1869, B1870 ..... T-198
DTC B1871 ..... T-200
DTC B1877, B1878, B1879, B1885 ..... T-202
DTC B1881, B1882, B1883, B1886 ..... T-203
DTC B1884, B1890 ..... T-205
DTC B1913, B1916, B1932, B1934 ..... T-208
DTC B1913, B1925, B1933, B1935 ..... T-210
DTC B1921 ..... T-211
DTC B1992, B1993, B1994, B1995 ..... T-212
DTC B1996, B1997, B1998, B1999 ..... T-213
DTC B2228, B2230, B2232, B2234 ..... T-215
DTC B2229, B2231, B2233, B2235 ..... T-217
DTC B2296 ..... T-218
DTC B2444, U2017 ..... T-220
DTC B2445, U2018 ..... T-222
DTC B2477 ..... T-224
DTC B2773, B2774, B2775, B2776 ..... T-224
DTC B2777, B2778, B2779, B2780 ..... T-226
DTC B2867 ..... T-227
TROUBLESHOOTING T-229
CAR-NAVIGATION SYSTEM T-229
NO.1 WHILE VEHICLE IS IN REVERSE, VEHICLE LOCATOR MARK GOES FORWARD. T-229
NO.2 IN NAVIGATION MODE, VEHICLE LOCATOR MARK SKIPS. T-229
NO.3 EVEN WHEN HEADLIGHT SWITCH IS TURNED ON, DAYTIME SCREEN DOES NOT CHANGE TO NIGHT TIME SCREEN. (FRONT AND REAR COMBINATION LIGHTS OPERATE NORMALLY.) T-230
AIR BAG SYSTEM T-230
NO.1 AIR BAG SYSTEM WARNING LIGHT DOES NOT ILLUMINATE T-231
NO.2 AIR BAG SYSTEM WARNING LIGHT IS ILLUMINATED ALL THE TIME T-232
NO.3 PASSENGER-SIDE AIR BAG CUT-OFF INDICATOR LIGHT DOES NOT ILLUMINATE T-235
NO.4 PASSENGER-SIDE AIR BAG CUT-OFF INDICATOR LIGHT IS ILLUMINATED ALL THE TIME T-237

LOCATION INDEX

POWER SYSTEM

A6E810001072W01

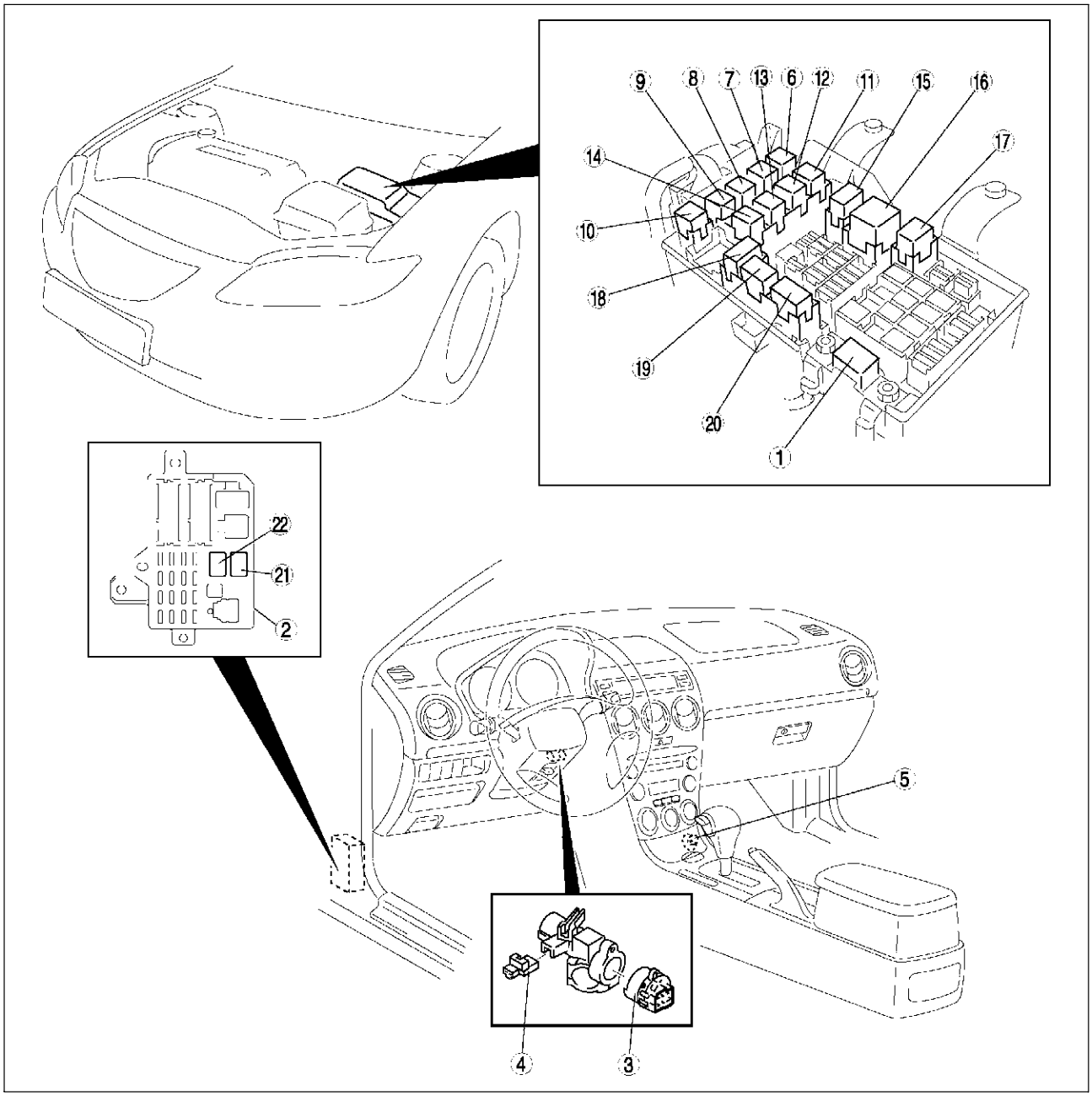

A6E8110W124

1	Main fuse (See T–19 MAIN FUSE REMOVAL/ INSTALLATION)
2	Fuse block (See T–20 FUSE BLOCK REMOVAL/ INSTALLATION)
3	Ignition switch (See T–20 IGNITION SWITCH REMOVAL/ INSTALLATION) (See T–20 IGNITION SWITCH INSPECTION)

4	Key reminder switch (See T–21 KEY REMINDER SWITCH REMOVAL/ INSTALLATION) (See T–21 KEY REMINDER SWITCH INSPECTION)
5	Cigarette lighter (See T–21 CIGARETTE LIGHTER REMOVAL/ INSTALLATION) (See T–22 CIGARETTE LIGHTER INSPECTION)
6	Cooling fan relay No.2 (See T–24 RELAY INSPECTION)
7	Horn relay (See T–24 RELAY INSPECTION)

T

8	Cooling fan relay No.3 (See T–24 RELAY INSPECTION)
9	Stater relay (See T–24 RELAY INSPECTION)
10	Cooling fan relay No.4 (See T–24 RELAY INSPECTION)
11	Woofer relay (See T–24 RELAY INSPECTION)
12	Rear window defroster relay (See T–24 RELAY INSPECTION)
13	Rear fog light relay (See T–24 RELAY INSPECTION)
14	A/C relay (See T–24 RELAY INSPECTION)
15	Main relay (See T–24 RELAY INSPECTION)
16	Headlight relay (See T–24 RELAY INSPECTION)
17	TNS relay (See T–24 RELAY INSPECTION)
18	Cooling fan relay No.1 (See T–24 RELAY INSPECTION)
19	Headlight cleaner relay (See T–24 RELAY INSPECTION)
20	Front fog light relay (See T–24 RELAY INSPECTION)
21	Blower motor relay (See T–24 RELAY INSPECTION)
22	Fuel pump relay (See T–24 RELAY INSPECTION)

EXTERIOR LIGHTING SYSTEM

A6E810001052W01

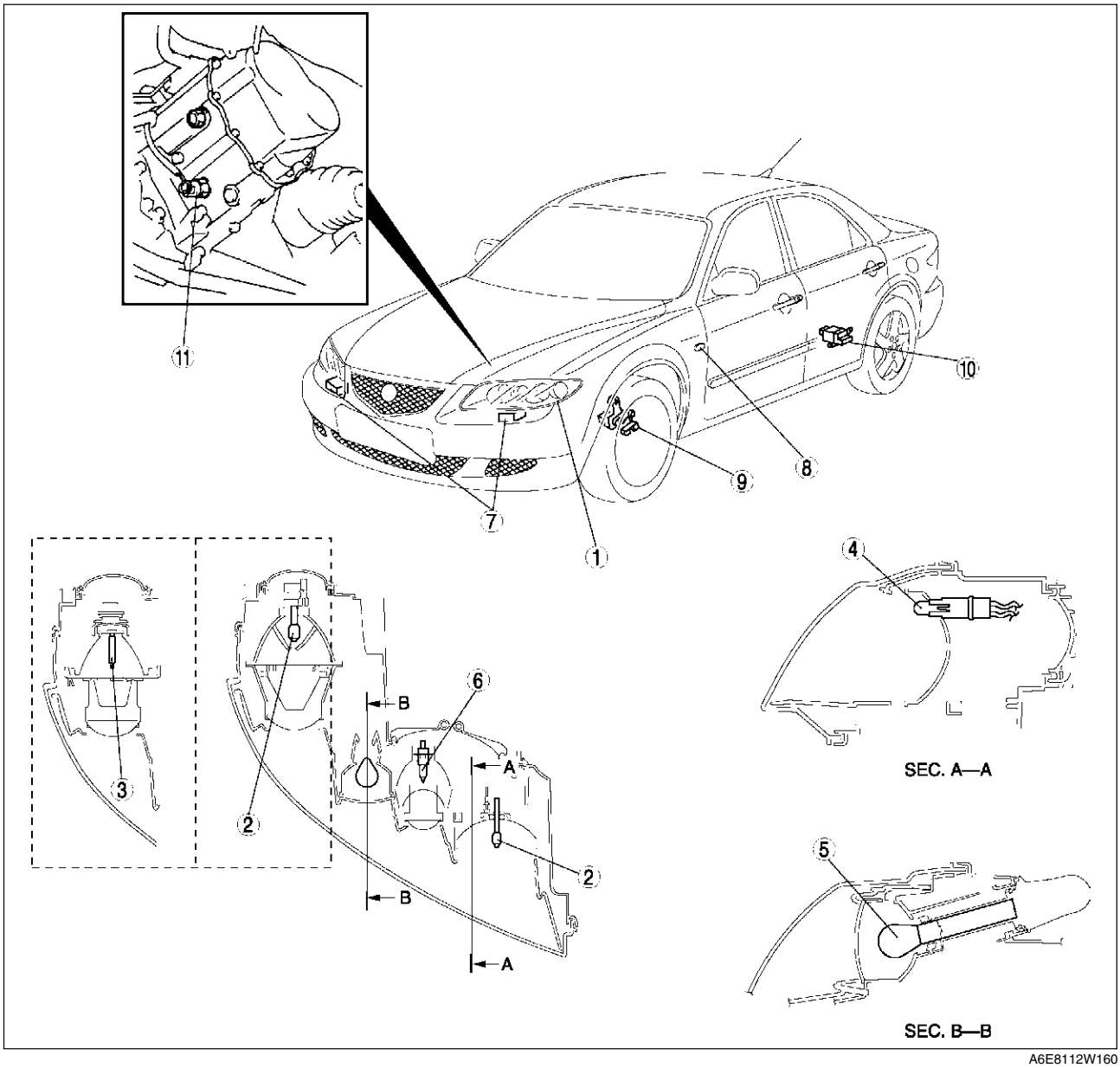

A6E8112W160

1	Front combination light (See T–25 DISCHARGE HEADLIGHT SERVICE WARNINGS) (See T–26 FRONT COMBINATION LIGHT REMOVAL/INSTALLATION) (See T–26 HEADLIGHT AIMING)
2	Headlight bulb (See T–28 HEADLIGHT BULB REMOVAL/INSTALLATION)
3	Discharge headlight bulb (See T–25 DISCHARGE HEADLIGHT SERVICE WARNINGS) (See T–28 HEADLIGHT BULB REMOVAL/INSTALLATION)
4	Parking light bulb (See T–33 PARKING LIGHT BULB REMOVAL/INSTALLATION)
5	Front turn light (See T–33 FRONT TURN LIGHT REMOVAL/INSTALLATION)
6	Front fog light bulb (See T–34 FRONT FOG LIGHT BULB REMOVAL/INSTALLATION) (See T–34 FRONT FOG LIGHT AIMING)

7	Discharge headlight control unit (See T–25 DISCHARGE HEADLIGHT SERVICE WARNINGS) (See T–30 DISCHARGE HEADLIGHT CONTROL UNIT REMOVAL/INSTALLATION) (See T–30 AUTO LEVELING CONTROL UNIT CONFIGURATION)
8	Front side turn light (See T–33 FRONT SIDE TURN LIGHT REMOVAL/INSTALLATION)
9	Front auto leveling sensor (See T–32 FRONT AUTO LEVELING SENSOR REMOVAL/INSTALLATION) (See T–31 HEADLIGHT ZEROSET)
10	Rear auto leveling sensor (See T–32 REAR AUTO LEVELING SENSOR REMOVAL/INSTALLATION) (See T–31 HEADLIGHT ZEROSET)
11	Back-up light switch (See T–43 BACK-UP LIGHT SWITCH REMOVAL/INSTALLATION) (See T–44 BACK-UP LIGHT SWITCH INSPECTION)

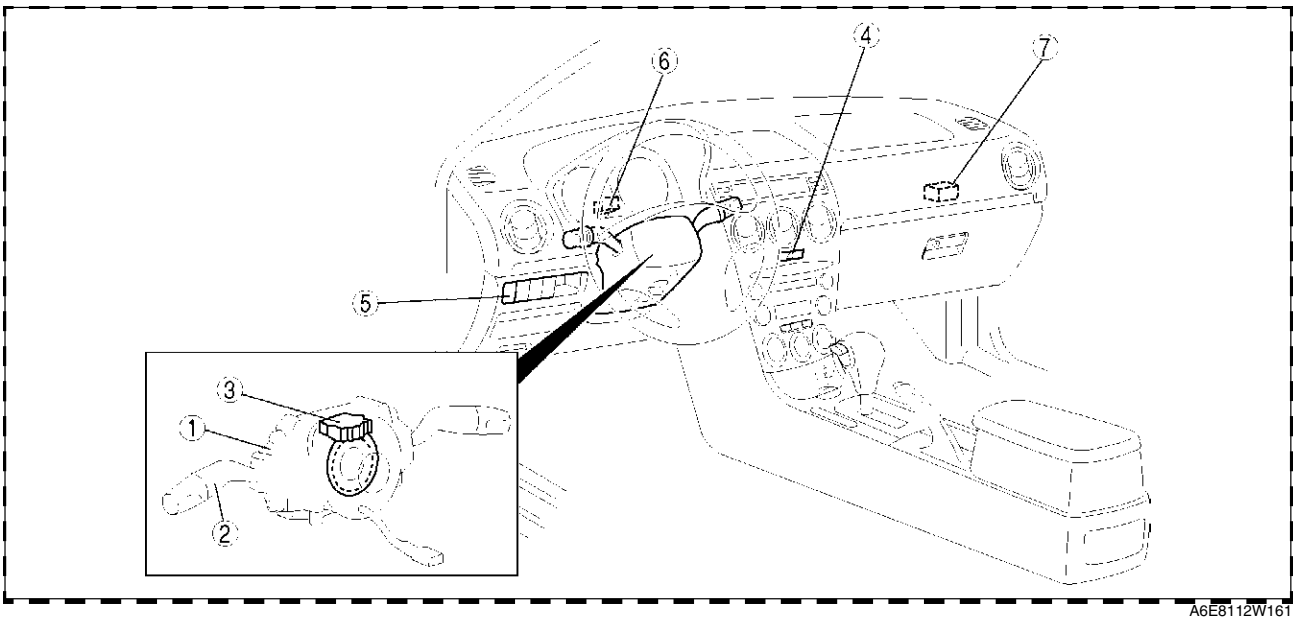

A6E8112W161

1	Combination switch (See T–37 COMBINATION SWITCH REMOVAL/INSTALLATION) (See T–38 COMBINATION SWITCH DISASSEMBLY/ASSEMBLY)
2	Light switch (See T–39 LIGHT SWITCH REMOVAL/INSTALLATION (See T–40 LIGHT SWITCH INSPECTION (See T–42 FRONT AND REAR FOG LIGHT SWITCH INSPECTION

3	Steering angle sensor (with DSC) (See T–39 STEERING ANGLE SENSOR INSPECTION)
4	Hazard warining switch (See T–41 HAZARD WARNING SWITCH INSPECTION)
5	Headlight leveling switch (See T–43 HEADLIGHT LEVELING SWITCH REMOVAL/INSTALLATION) (See T–43 HEADLIGHT LEVELING SWITCH INSPECTION)

6	Flasher unit (See T–44 FLASHER UNIT REMOVAL/ INSTALLATION) (See T–44 FLASHER UNIT INSPECTION)
7	Running light unit (See T–45 RUNNING LIGHT UNIT REMOVAL/ INSTALLATION) (See T–46 RUNNING LIGHT UNIT INSPECTION)

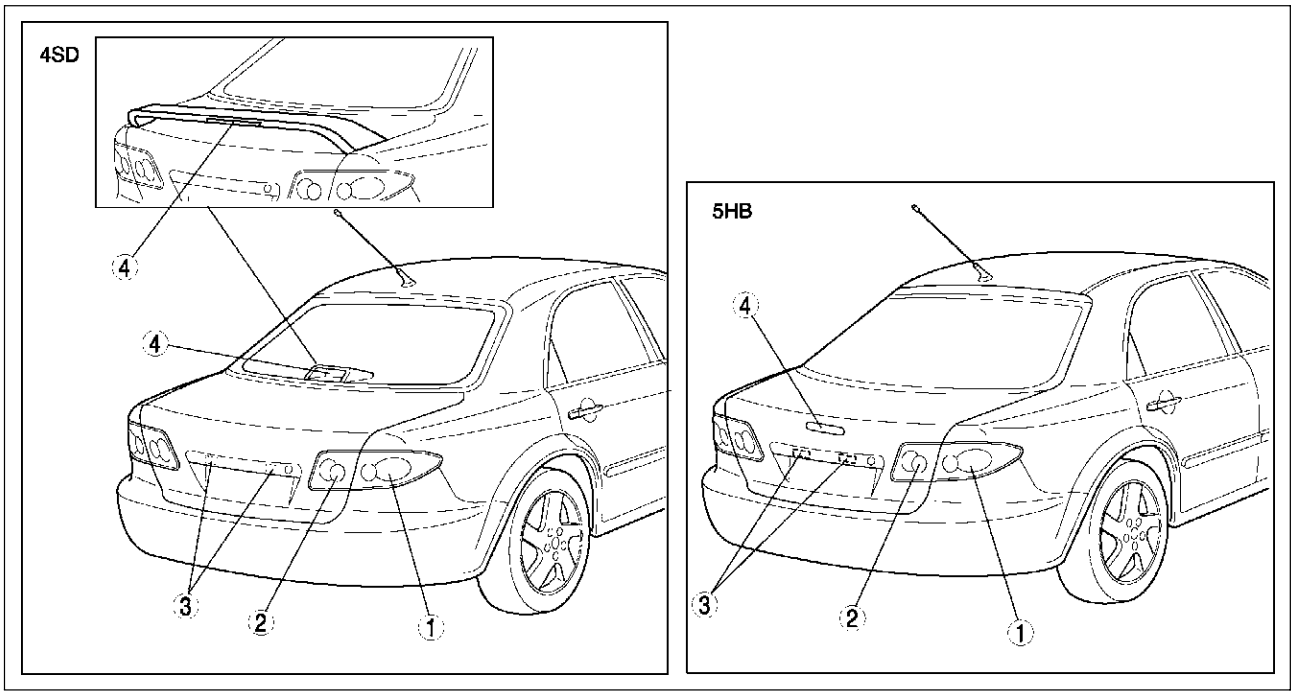

A6E8112W162

1	Rear combination light (See T–35 REAR COMBINATION LIGHT REMOVAL/INSTALLATION)
2	Inboard combination light (See T–35 INBOARD COMBINATION LIGHT REMOVAL/INSTALLATION

3	License plate light (See T–37 LICENSE PLATE LIGHT REMOVAL/ INSTALLATION)
4	High-mount brake light (See T–36 HIGH-MOUNT BRAKE LIGHT REMOVAL/INSTALLATION)

INTERIOR LIGHTING SYSTEM

A6E810001052W02

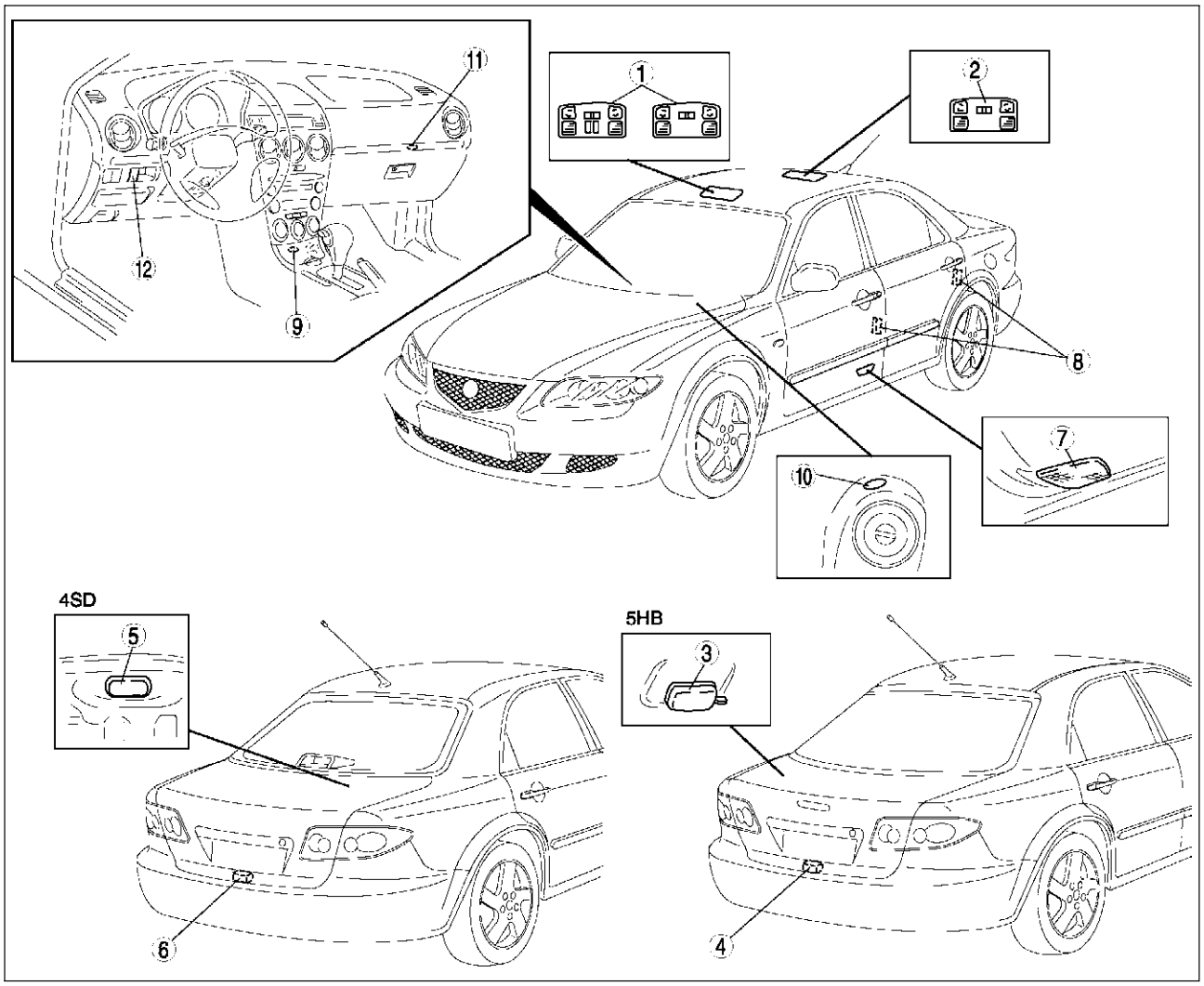

A6E8114W130

1	Front map light (See T–48 FRONT MAP LIGHT REMOVAL/INSTALLATION) (See T–48 FRONT MAP LIGHT INSPECTION)
2	Rear map light (See T–49 REAR MAP LIGHT REMOVAL/INSTALLATION) (See T–49 REAR MAP LIGHT INSPECTION)
3	Cargo compartment light (See T–50 CARGO COMPARTMENT LIGHT REMOVAL/INSTALLATION) (See T–50 CARGO COMPARTMENT LIGHT INSPECTION)
4	Cargo compartment light switch (See T–50 CARGO COMPARTMENT LIGHT SWITCH INSPECTION)
5	Trunk compartment light (See T–51 TRUNK COMPARTMENT LIGHT BULB REMOVAL/INSTALLATION) (See T–51 TRUNK COMPARTMENT LIGHT SWITCH INSPECTION)
6	Trunk compartment light switch (See T–51 TRUNK COMPARTMENT LIGHT SWITCH INSPECTION)

7	Courtesy light (See T–51 COURTESY LIGHT BULB REMOVAL/INSTALLATION)
8	Door switch (See T–52 DOOR SWITCH REMOVAL/INSTALLATION) (See T–52 DOOR SWITCH INSPECTION)
9	Ashtray illumination (See T–52 ASHTRAY ILLUMINATION BULB REMOVAL/INSTALLATION)
10	Ignition key illumination (See T–53 IGNITION KEY ILLUMINATION BULB REMOVAL/INSTALLATION)
11	Grove compartment light (See T–53 GLOVE COMPARTMENT LIGHT BULB REMOVAL/INSTALLATION)
12	Panel light control switch (See T–53 PANEL LIGHT CONTROL SWITCH REMOVAL/INSTALLATION) (See T–54 PANEL LIGHT CONTROL SWITCH INSPECTION)

WIPER AND WASHER SYSTEM

A6E810001052W03

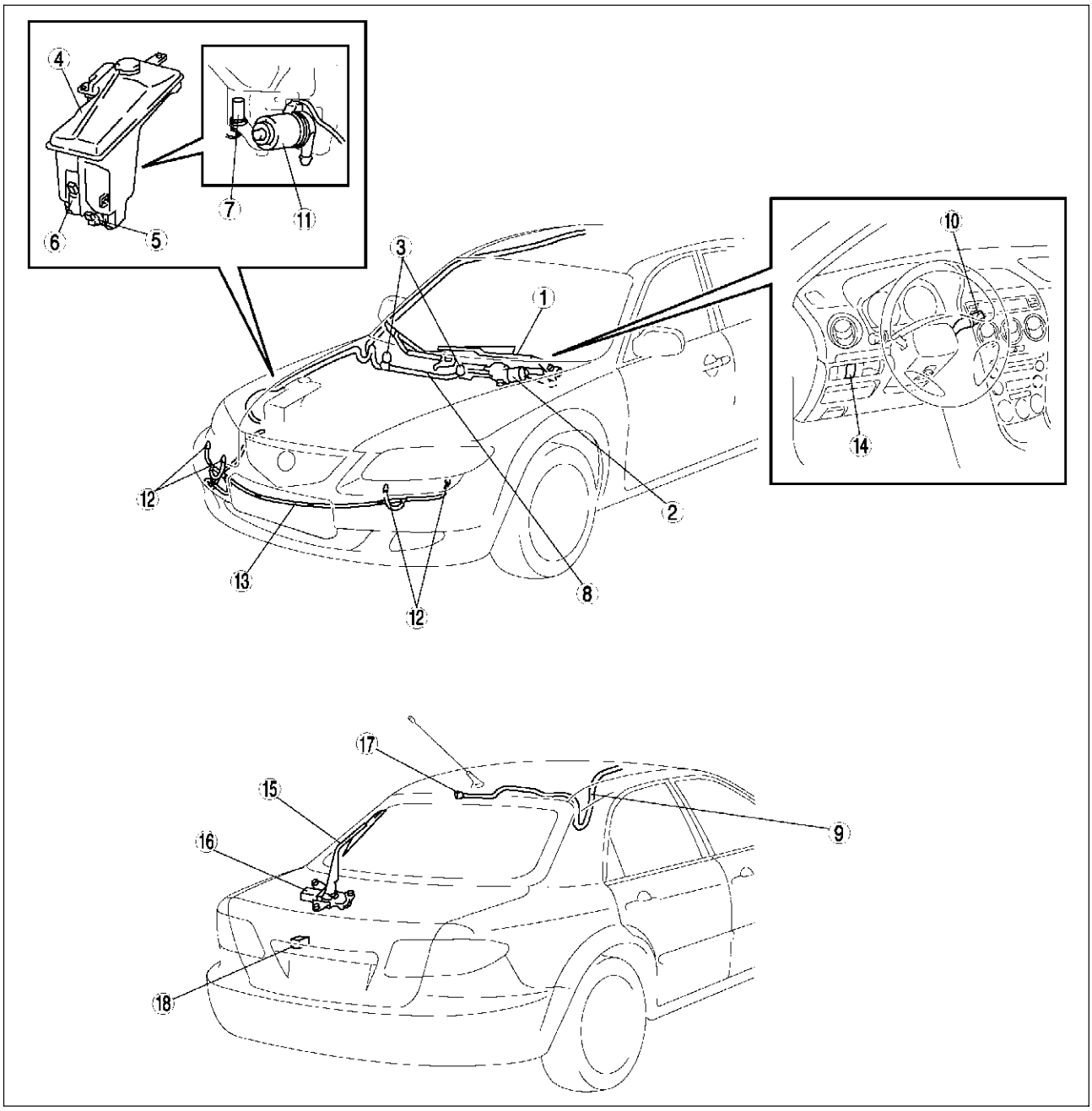

A6E8116T101

1	Windshield wiper arm and blade (See T–57 WINDSHIELD WIPER ARM AND BLADE REMOVAL/INSTALLATION) (See T–58 WINDSHIELD WIPER ARM AND BLADE ADJUSTMENT)
2	Windshield wiper motor (See T–56 WINDSHIELD WIPER MOTOR REMOVAL/INSTALLATION) (See T–56 WINDSHIELD WIPER MOTOR DISASSEMBLY/ASSEMBLY) (See T–56 WINDSHIELD WIPER MOTOR INSPECTION)

3	Windshield washer nozzle (See T–60 WINDSHIELD WASHER NOZZLE REMOVAL/INSTALLATION) (See T–60 WINDSHIELD WASHER NOZZLE CLEANING)
4	Washer tank (See T–58 WASHER TANK REMOVAL/INSTALLATION)
5	Windshield washer motor (See T–59 WINDSHIELD WASHER MOTOR REMOVAL/INSTALLATION) (See T–59 WINDSHIELD WASHER MOTOR INSPECTION)

6	Rear washer motor (5HB) (See T–61 REAR WASHER MOTOR REMOVAL/INSTALLATION) (See T–61 REAR WASHER MOTOR INSPECTION)
7	Washer fluid-level sensor (5HB) (See T–59 WASHER FLUID-LEVEL SENSOR REMOVAL/INSTALLATION) (See T–60 WASHER FLUID-LEVEL SENSOR INSPECTION)
8	Windshield washer hose (See T–61 WINDSHIELD WASHER HOSE REMOVAL/INSTALLATION)
9	Rear washer hose (5HB) (See T–65 REAR WASHER HOSE REMOVAL/INSTALLATION)
10	Wiper and washer switch (See T–67 WIPER AND WASHER SWITCH REMOVAL/INSTALLATION) (See T–68 WIPER AND WASHER SWITCH INSPECTION)
11	Headlight cleaner motor (See T–69 HEADLIGHT CLEANER MOTOR REMOVAL/INSTALLATION) T–70 HEADLIGHT CLEANER MOTOR INSPECTION)
12	Headlight cleaner nozzle (See T–70 HEADLIGHT CLEANER NOZZLE REMOVAL/INSTALLATION) (See T–70 HEADLIGHT CLEANER NOZZLE ADJUSTMENT) (See T–70 HEADLIGHT CLEANER NOZZLE CLEANING)
13	Headlight cleaner hose (See T–71 HEADLIGHT CLEANER HOSE REMOVAL/INSTALLATION)
14	Headlight cleaner switch (See T–71 HEADLIGHT CLEANER SWITCH REMOVAL/INSTALLATION) (See T–71 HEADLIGHT CLEANER SWITCH INSPECTION)
15	Rear wiper arm and blade (5HB) T–63 REAR WIPER ARM AND BLADE REMOVAL/INSTALLATION) (See T–64 REAR WIPER ARM AND BLADE ADJUSTMENT)
16	Rear wiper motor (5HB) (See T–62 REAR WIPER MOTOR REMOVAL/INSTALLATION) (See T–62 REAR WIPER MOTOR INSPECTION)
17	Rear washer nozzle (5HB) (See T–64 REAR WASHER NOZZLE REMOVAL/INSTALLATION) (See T–64 REAR WASHER NOZZLE ADJUSTMENT) (See T–64 REAR WASHER NOZZLE CLEANING)
18	Intermittent rear wiper relay (5HB) (See T–66 INTERMITTENT REAR WIPER RELAY REMOVAL/INSTALLATION) (See T–66 INTERMITTENT REAR WIPER RELAY INSPECTION)

WARNING AND INDICATOR SYSTEM

A6E810001067W01

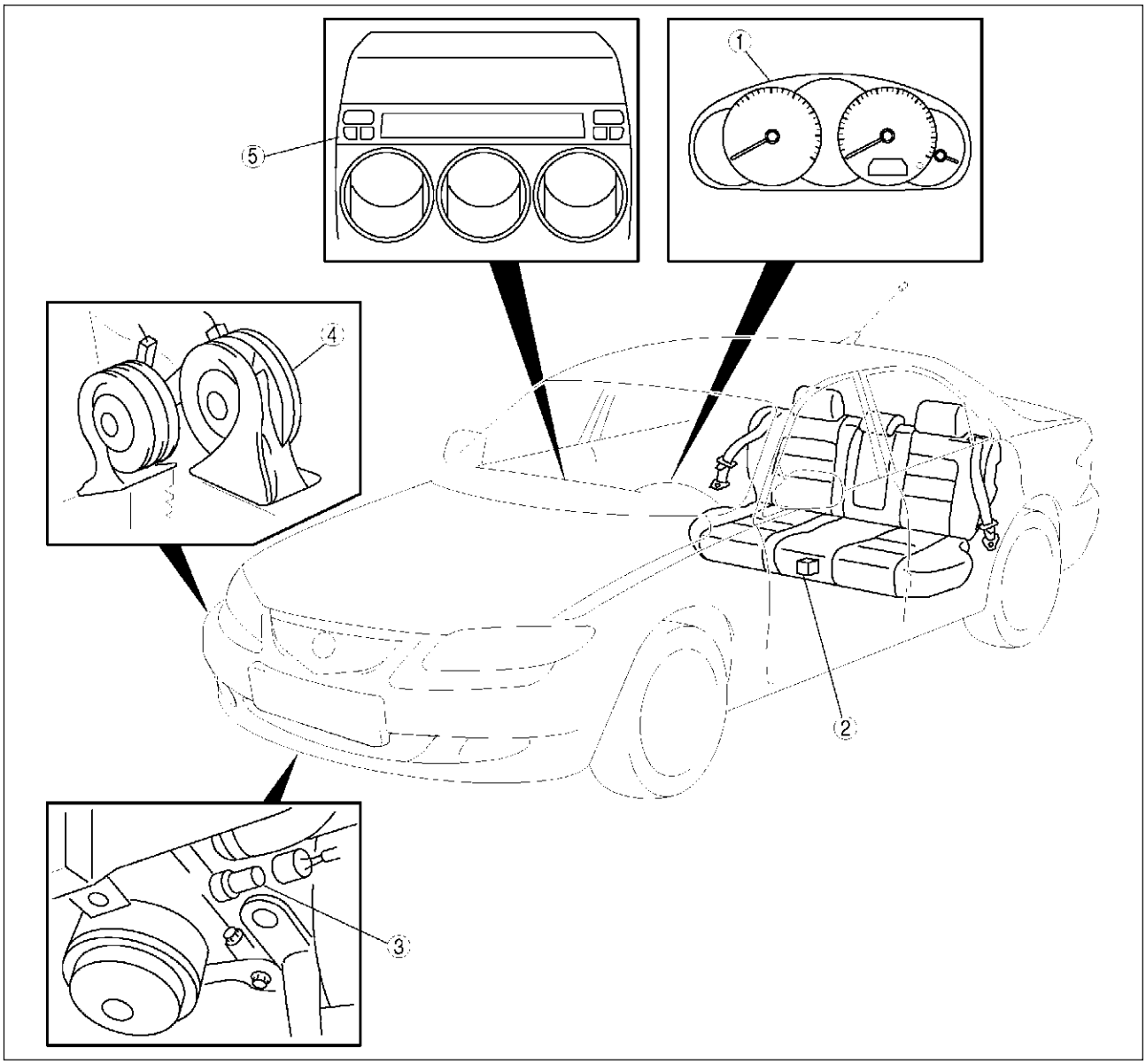

A6E8118W012

1	Instrument cluster (See T–72 INSTRUMENT CLUSTER REMOVAL/INSTALLATION) (See T–73 INSTRUMENT CLUSTER DISASSEMBLY/ASSEMBLY) (See T–73 INSTRUMENT CLUSTER INSPECTION) (See T–74 INSTRUMENT CLUSTER REPAIR) (See T–75 INSTRUMENT CLUSTER INPUT/OUTPUT CHECK MODE)

2	Fuel gauge sender unit (See T–83 FUEL GAUGE SENDER UNIT INSPECTION)
3	Oil pressure switch (See T–84 OIL PRESSURE SWITCH INSPECTION)
4	Horn (See T–84 HORN REMOVAL/INSTALLATION)
5	Information display (See T–84 INFORMATION DISPLAY REMOVAL/INSTALLATION)

THEFT-DETERRENT SYSTEM

A6E810050000W01

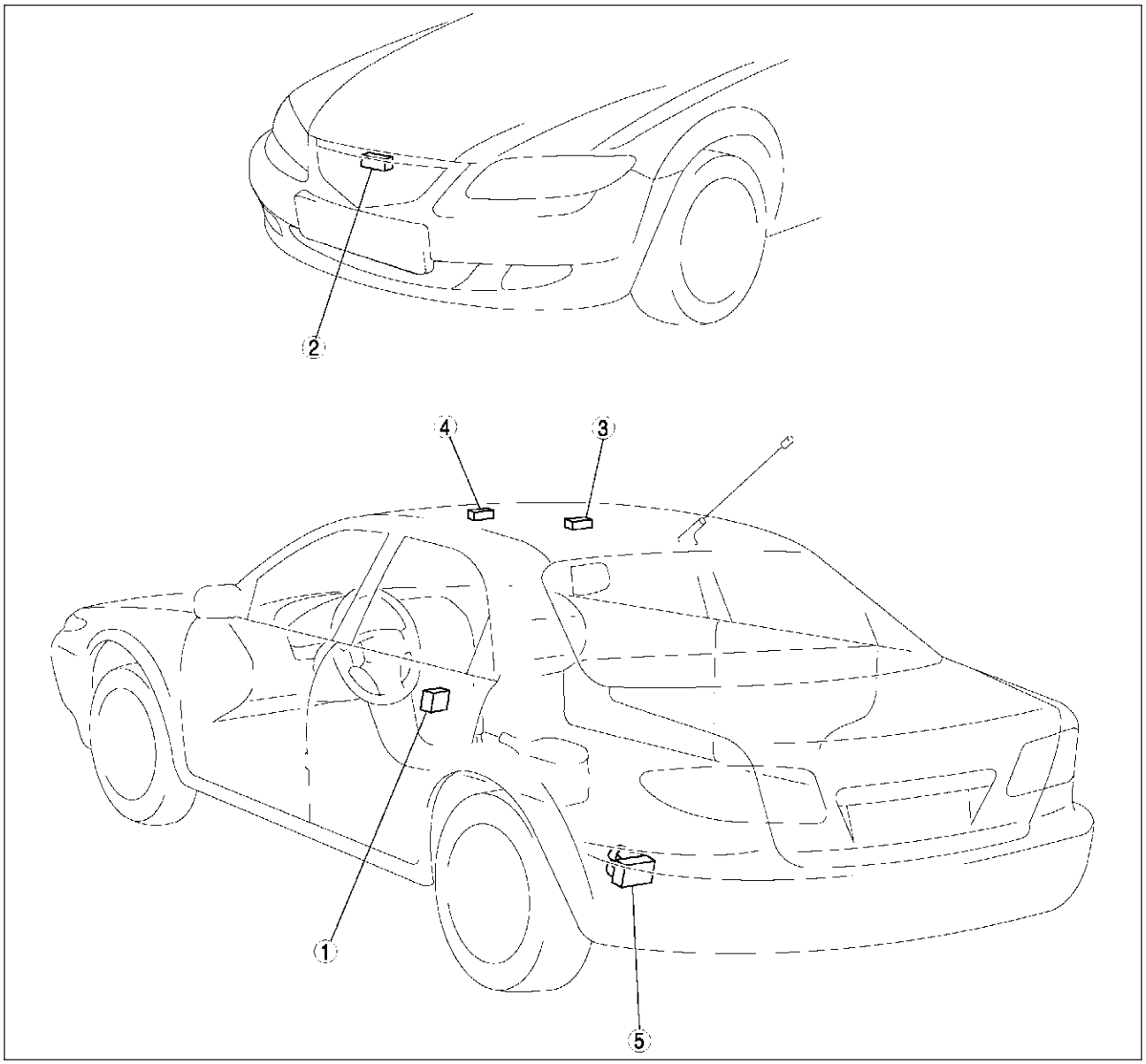

A6E8120W007

1	Theft-deterrent control module (See T–86 THEFT-DETERRENT CONTROL MODULE REMOVAL/INSTALLATION) (See T–86 THEFT-DETERRENT CONTROL MODULE INSPECTION)
2	Bonnet switch (See T–85 BONNET SWITCH INSPECTION)

3	Intruder sensor (Vehicle with sliding sunroof) (See T–89 INTRUDER SENSOR REMOVAL/INSTALLATION)
4	Intruder sensor (Vehicle without sliding sunroof) (See T–89 INTRUDER SENSOR REMOVAL/INSTALLATION)
5	Theft-deterrent siren (See T–89 THEFT-DETERRENT SIREN REMOVAL/INSTALLATION)

T

IMMOBILIZER SYSTEM

A6E810067000W01

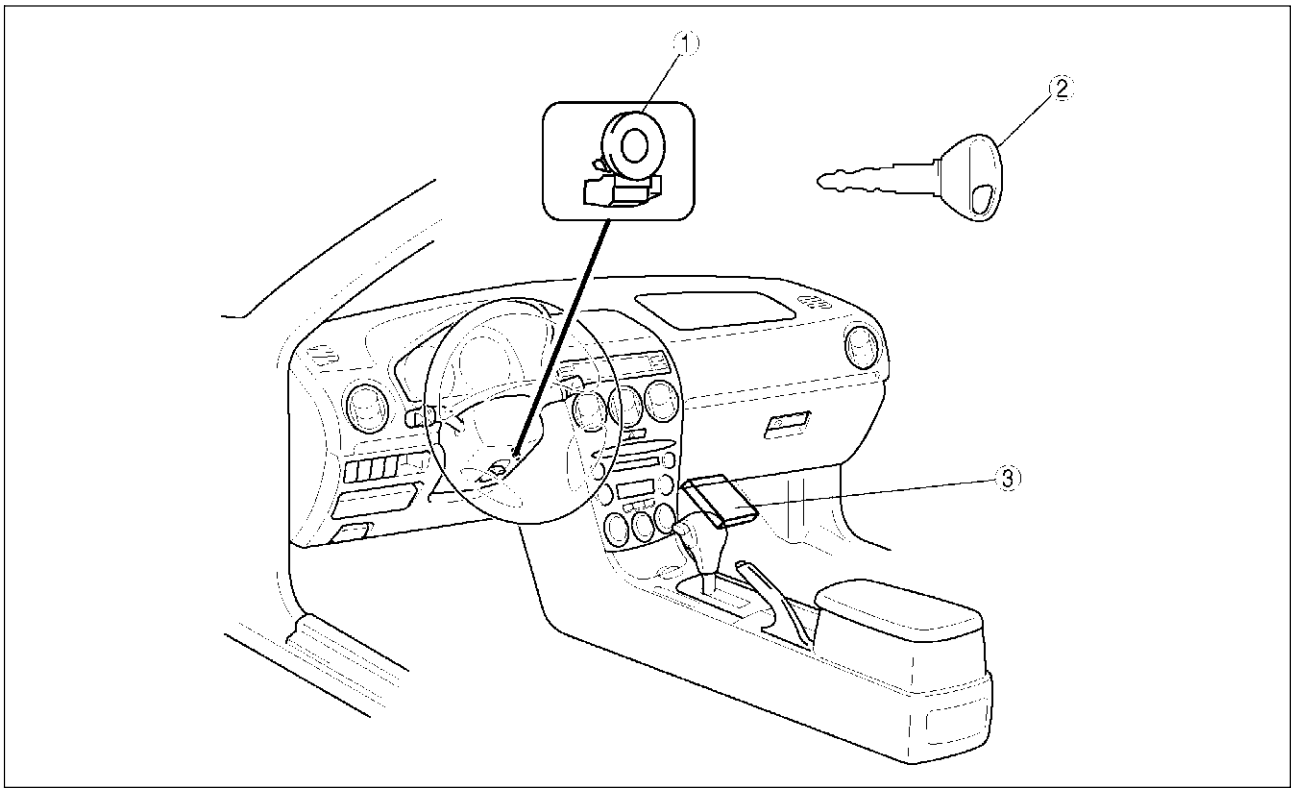

A6E8122W004

1	Coil (See T–90 COIL REMOVAL/INSTALLATION)
2	Key (transponder) (See T–90 IMMOBILIZER SYSTEM REPROGRAM PROCEDURE)
3	PCM (See T–90 IMMOBILIZER SYSTEM REPROGRAM PROCEDURE)

AUDIO AND NAVIGATION SYSTEM

Audio System

A6E810001066W01

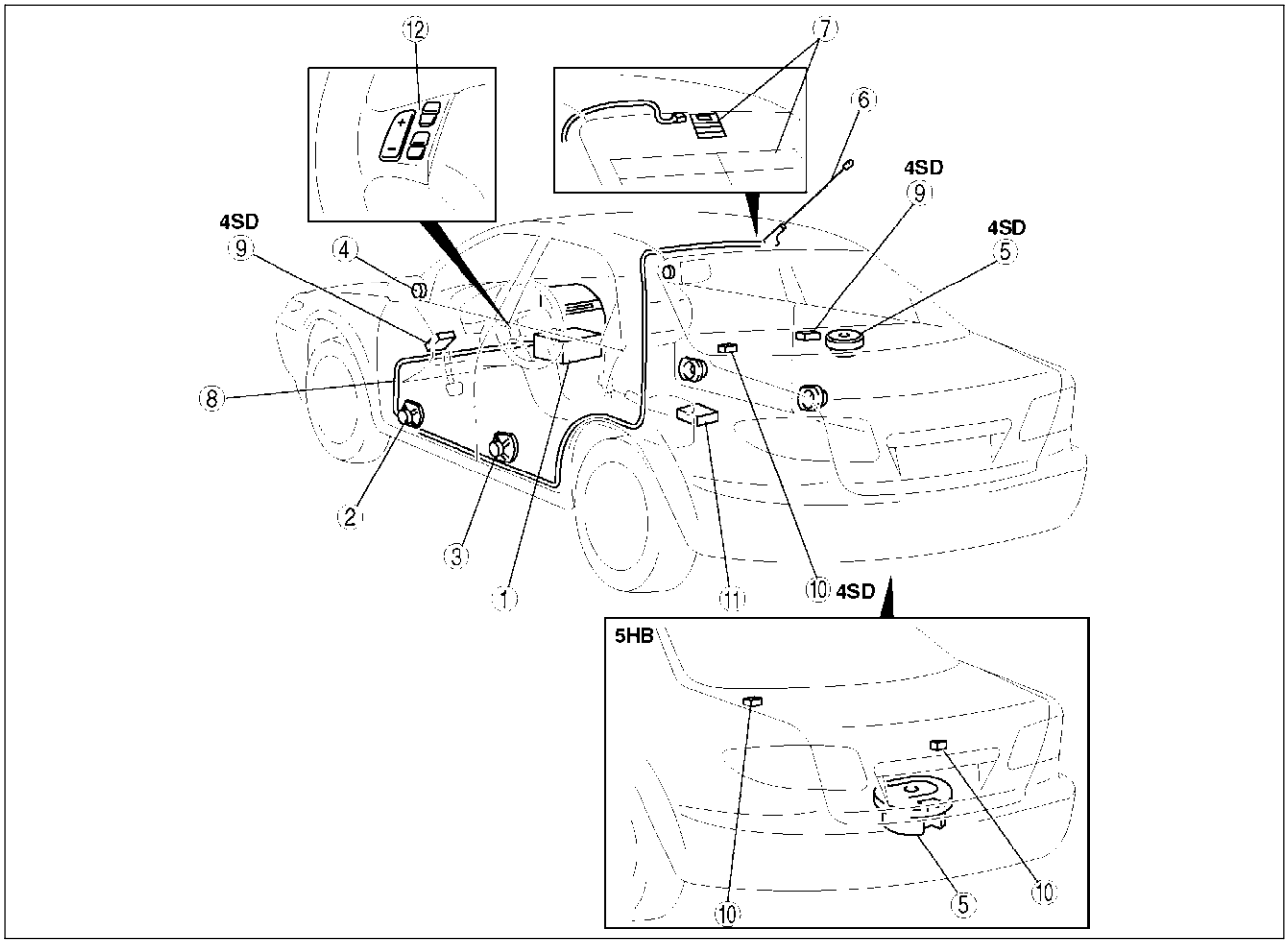

A6E8124W044

1	Audio unit (See T–93 ANTI-THEFT SYSTEM) (See T–96 CENTER PANEL MODULE REMOVAL/INSTALLATION) (See T–97 CENTER PANEL MODULE DISASSEMBLY/ASSEMBLY) (See T–97 AUDIO UNIT DISASSEMBLY/ASSEMBLY)
2	Front door speaker (See T–101 FRONT DOOR SPEAKER REMOVAL/INSTALLATION) (See T–101 FRONT DOOR SPEAKER INSPECTION)
3	Rear door speaker (See T–102 REAR DOOR SPEAKER REMOVAL/INSTALLATION) (See T–102 REAR DOOR SPEAKER INSPECTION)
4	Tweeter (See T–103 TWEETER REMOVAL/INSTALLATION) (See T–103 TWEETER INSPECTION)
5	Woofer (See T–103 WOOFER REMOVAL/INSTALLATION) (See T–104 WOOFER INSPECTION)

6	Center roof antenna (See T–107 CENTER ROOF ANTENNA REMOVAL/INSTALLATION) (See T–107 CENTER ROOF ANTENNA INSPECTION)
7	Glass antenna (See T–107 GLASS ANTENNA INSPECTION)
8	Antenna feeder (See T–108 ANTENNA FEEDER LOCATION) (See T–109 FRONT ANTENNA FEEDER INSPECTION) (See T–109 REAR ANTENNA FEEDER INSPECTION)
9	Noise filter (See T–104 NOISE FILTER REMOVAL/INSTALLATION) (See T–105 NOISE FILTER INSPECTION)
10	Condenser (See T–106 CONDENSER REMOVAL/INSTALLATION)
11	Audio amplifier (See T–100 AUDIO AMPLIFIER REMOVAL/INSTALLATION)
12	Audio control switch (See T–99 AUDIO CONTROL SWITCH REMOVAL/INSTALLATION) (See T–100 AUDIO CONTROL SWITCH INSPECTION)

T

Car-navigation System

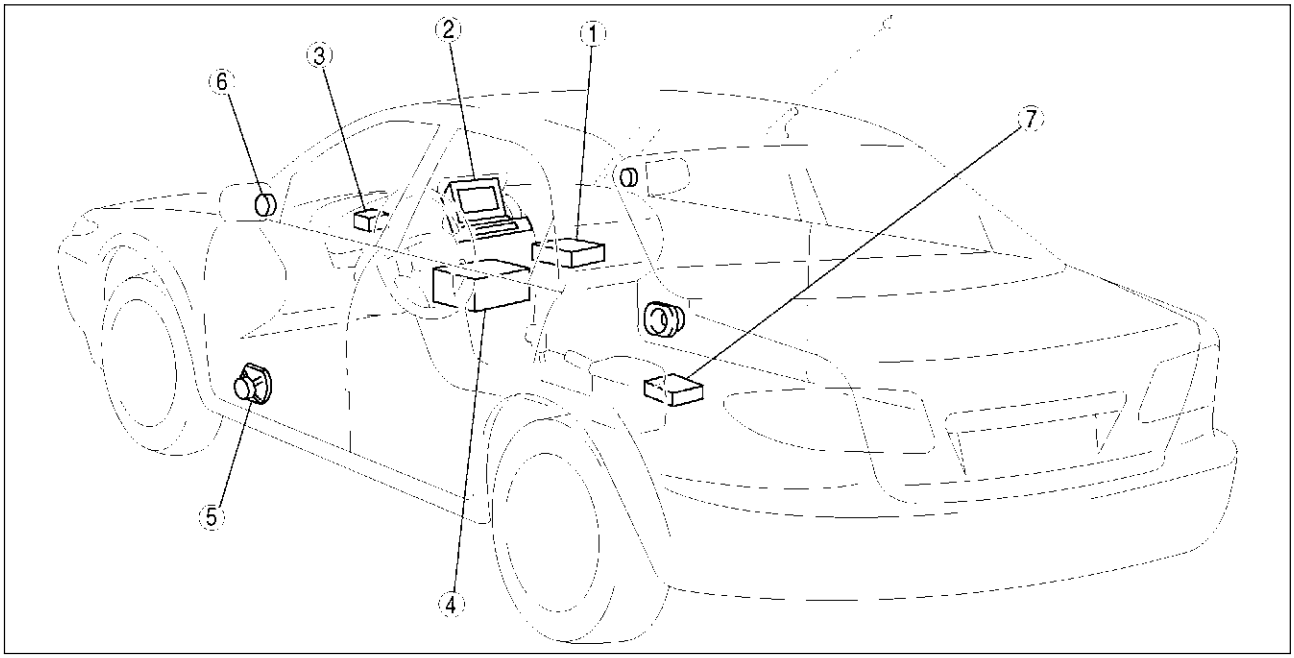

A6E8124W045

1	Car-navigation unit (See T–98 CAR-NAVIGATION UNIT REMOVAL/ INSTALLATION)
2	Car-navigation unit (See T–98 CAR-NAVIGATION UNIT REMOVAL/ INSTALLATION)
3	GPS antenna (See T–108 GPS ANTENNA REMOVAL/ INSTALLATION)
4	Audio unit (See T–93 ANTI-THEFT SYSTEM) (See T–96 CENTER PANEL MODULE REMOVAL/ INSTALLATION) (See T–97 CENTER PANEL MODULE DISASSEMBLY/ASSEMBLY) (See T–97 AUDIO UNIT DISASSEMBLY/ ASSEMBLY)

5	Front door speaker (See T–101 FRONT DOOR SPEAKER REMOVAL/ INSTALLATION) (See T–101 FRONT DOOR SPEAKER INSPECTION)
6	Tweeter (See T–103 TWEETER REMOVAL/ INSTALLATION) (See T–103 TWEETER INSPECTION)
7	Audio amplifier (See T–100 AUDIO AMPLIFIER REMOVAL/ INSTALLATION)

CRUISE CONTROL SYSTEM

A6E810001011W01

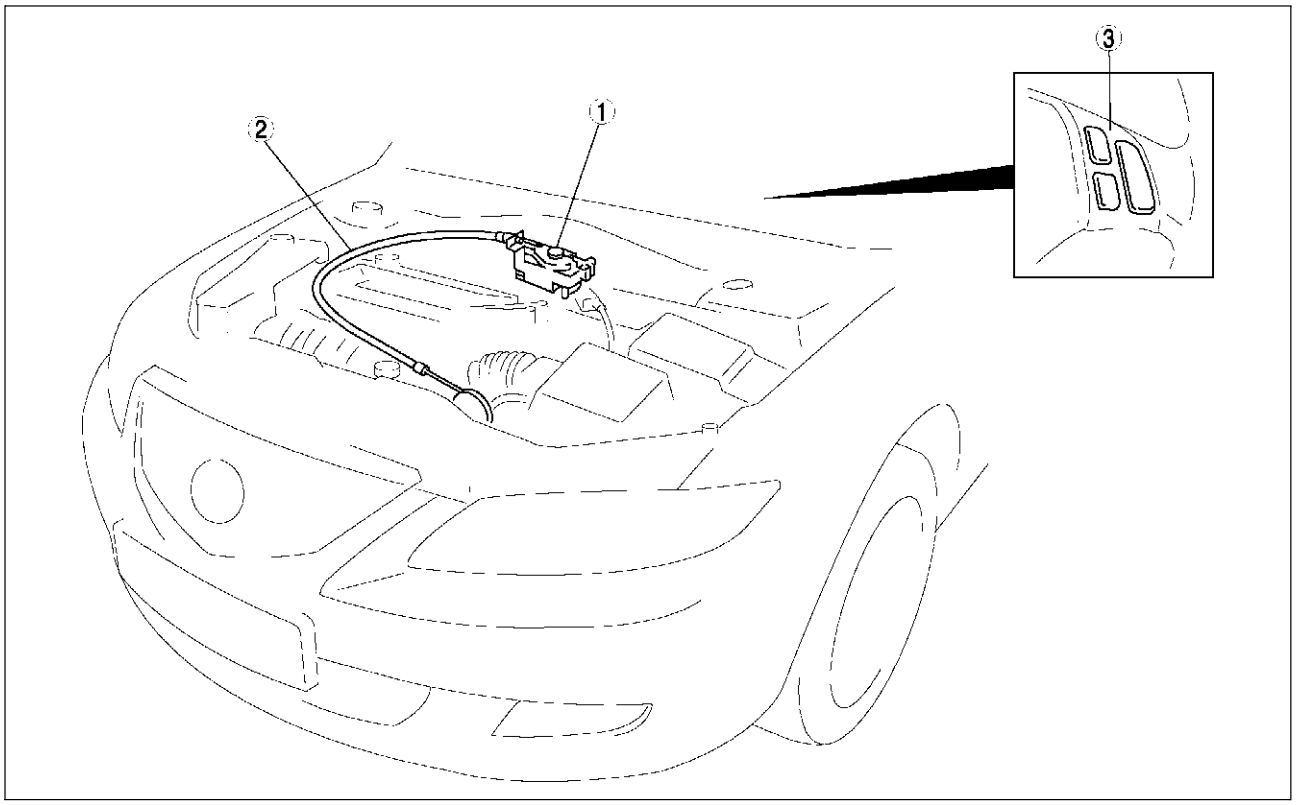

A6E8128W017

1	Cruise actuator (See T–110 CRUISE ACTUATOR REMOVAL/INSTALLATION) (See T–110 CRUISE ACTUATOR INSPECTION)
2	Actuator cable (See T–112 ACTUATOR CABLE REMOVAL) (See T–114 ACTUATOR CABLE INSTALLATION)

3	Cruise control switch (See T–115 CRUISE CONTROL SWITCH REMOVAL/INSTALLATION) (See T–116 CRUISE CONTROL SWITCH INSPECTION)

T

AIR BAG SYSTEM

A6E810001046W01

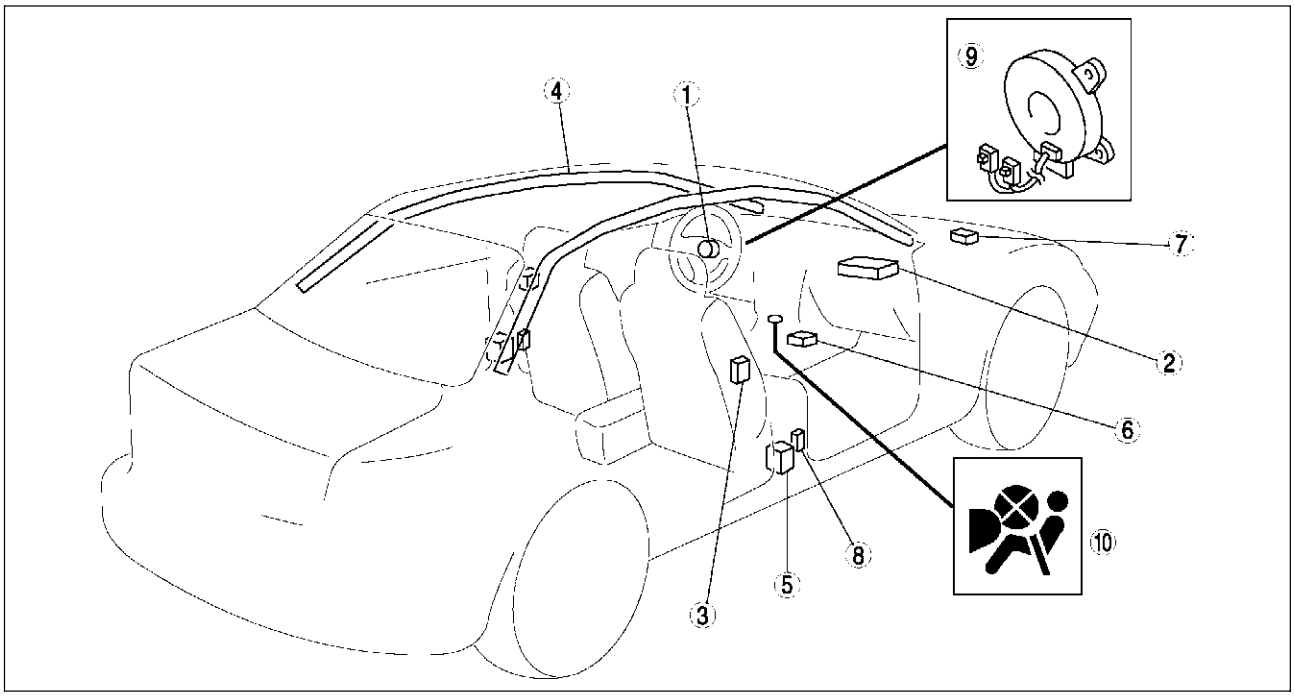

A6E8130W049

1	Driver-side air bag module (See T–120 DRIVER-SIDE AIR BAG MODULE REMOVAL/INSTALLATION) (See T–127 AIR BAG MODULE AND PRE-TENSIONER SEAT BELT DEPLOYMENT PROCEDURES)
2	Passenger-side air bag module (See T–121 PASSENGER-SIDE AIR BAG MODULE REMOVAL/INSTALLATION) (See T–127 AIR BAG MODULE AND PRE-TENSIONER SEAT BELT DEPLOYMENT PROCEDURES)
3	Side air bag module (See T–121 SIDE AIR BAG MODULE REMOVAL/INSTALLATION) (See T–127 AIR BAG MODULE AND PRE-TENSIONER SEAT BELT DEPLOYMENT PROCEDURES)
4	Curtain air bag module (See T–122 CURTAIN AIR BAG MODULE REMOVAL/INSTALLATION) (See T–127 AIR BAG MODULE AND PRE-TENSIONER SEAT BELT DEPLOYMENT PROCEDURES)

5	Pre-tensioner seat belt (See T–127 AIR BAG MODULE AND PRE-TENSIONER SEAT BELT DEPLOYMENT PROCEDURES)
6	SAS unit (See T–124 SAS UNIT REMOVAL/INSTALLATION)
7	Crash zone sensor (See T–123 CRASH ZONE SENSOR REMOVAL/INSTALLATION)
8	Side air bag sensor (See T–123 SIDE AIR BAG SENSOR REMOVAL/INSTALLATION)
9	Clock spring (See T–125 CLOCK SPRING REMOVAL/INSTALLATION) (See T–126 CLOCK SPRING INSPECTION) (See T–125 CLOCK SPRING ADJUSTMENT)
10	Passenger-side air bag cut-off indicator light (See T–127 PASSENGER-SIDE AIR BAG CUT-OFF INDICATOR LIGHT REMOVAL/INSTALLATION)

POWER SYSTEM

FUSE SERVICE CAUTION

A6E811066000W01

Caution

- **Determine and correct the cause of the burnt fuse before replacing it with the specified type. If the fuse is replaced before doing this, it may burn again.**

MAIN FUSE REMOVAL/INSTALLATION

A6E811066761W01

1. Disconnect the negative battery cable.
2. Remove the main fuse block cover.
3. Remove in the order indicated in the table.

1	Nut
2	Bolt (See T–19 Bolt Removal Note)
3	Main fuse

4. Install in the reverse order of removal.

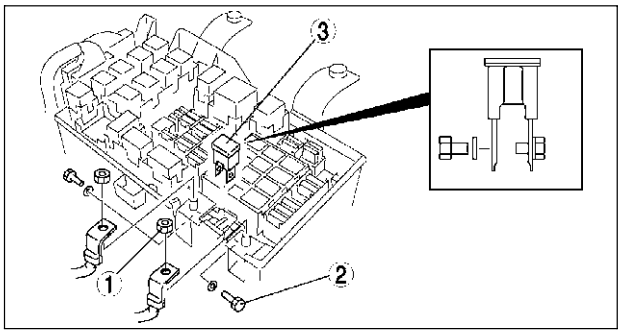

A6E8110W108

Bolt Removal Note

1. Press and remove the tabs on the main fuse block at the positions indicated by the arrows.

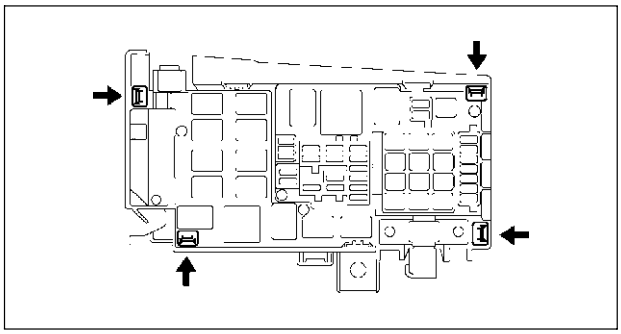

A6E8110W119

2. Lift up the main fuse block and remove the bolts.

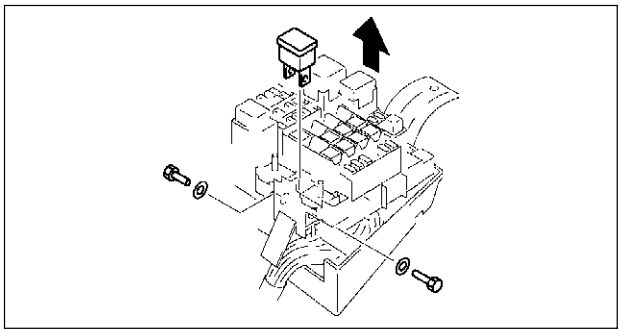

A6E8110W120

T

FUSE BLOCK REMOVAL/INSTALLATION

A6E811066730W01

1. Disconnect the negative battery cable.
2. Remove the left-side front side trim. (See S–88 FRONT SIDE TRIM REMOVAL/INSTALLATION)
3. Remove in the order indicated in the table.

1	Connector
2	Bolt
3	Fuse block

4. Install in the reverse order of removal.

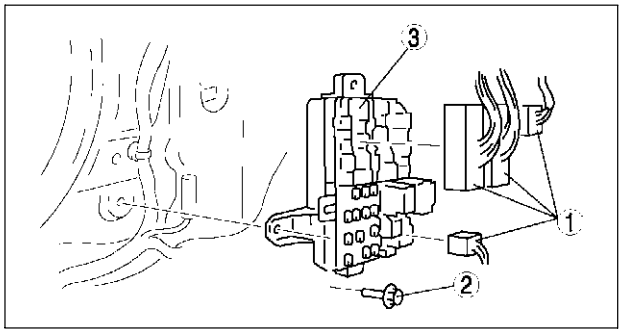

A6E8110W107

IGNITION SWITCH REMOVAL/INSTALLATION

A6E811066151W01

1. Disconnect the negative battery cable.
2. Remove the column cover. (See S–84 COLUMN COVER REMOVAL/INSTALLATION)
3. Remove in the order indicated in the table.

1	Connector
2	Screw
3	Ignition switch

4. Install in the reverse order of removal.

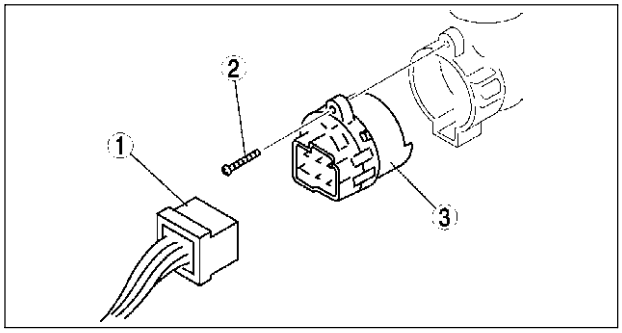

A6E8110W101

IGNITION SWITCH INSPECTION

A6E811066151W02

1. Disconnect the negative battery cable.
2. Remove the column cover. (See S–84 COLUMN COVER REMOVAL/INSTALLATION)
3. Disconnect the ignition switch connectors.
4. Inspect for continuity between the ignition switch terminals using an ohmmeter.
   - If not as specified, replace the ignition switch.

○—○: Continuity

Ignition key position	Terminal E	F	D	C	B	A
LOCK						
ACC	○		○			
ON	○		○	○		
		○			○	
START	○			○		
		○				○

A6E8110W114

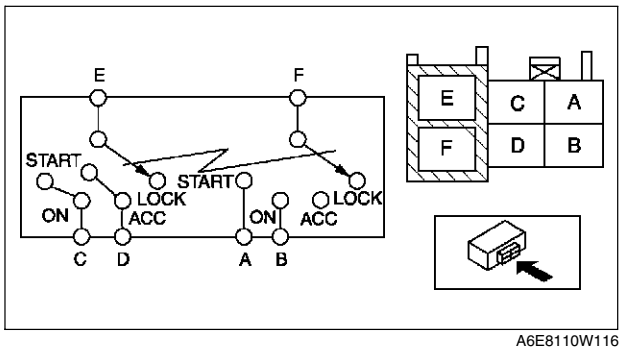

A6E8110W116

KEY REMINDER SWITCH REMOVAL/INSTALLATION

A6E811066152W01

1. Disconnect the negative battery cable.
2. Remove the column cover.
3. Disconnect the key reminder switch connector.
4. Remove the key reminder switch.
5. Install in the reverse order of removal.

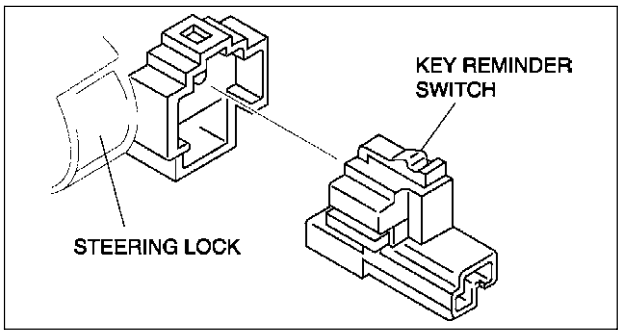

A6E8110W102

KEY REMINDER SWITCH INSPECTION

A6E811066152W02

1. Disconnect the negative battery cable.
2. Remove the column cover. (See S–84 COLUMN COVER REMOVAL/INSTALLATION)
3. Disconnect the key reminder switch connector.
4. Inspect for continuity between the key reminder switch terminals using an ohmmeter.
   - If not as specified, replace the key reminder switch.

○—○ : Continuity

Key position	Terminal	
	A	B
Key inserted	○	○
Key removed		

A6E8110W115

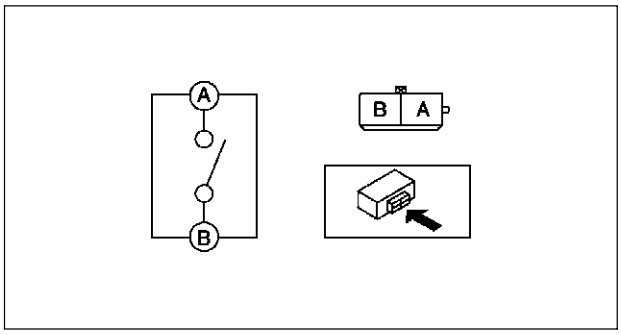

A6E8110W117

CIGARETTE LIGHTER REMOVAL/INSTALLATION

A6E811067000W01

1. Disconnect the negative battery cable.
2. Remove in the order indicated in the table.

1	Cigarette lighter plug
2	Connector
3	Socket (See T–22 Socket Removal Note)
4	Ring (See T–22 Ring Removal Note)

3. Install in the reverse order of removal.

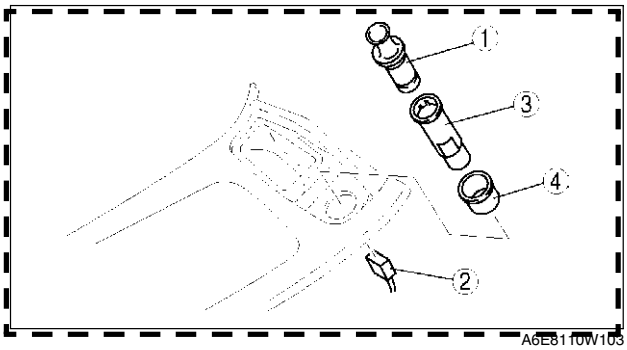

A6E8110W103

T

Socket Removal Note

1. Insert a tape-wrapped screwdriver into the socket hole, then press against the ring protrusion to lift the socket toward you.

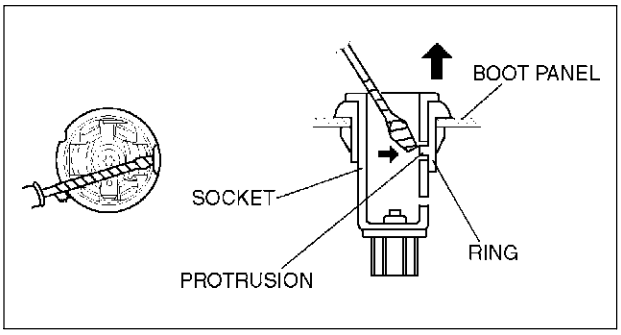

A6E8110W104

2. As shown in the figure, lift out the socket until the ring protrusion locks into the lower socket hole.
3. Remove the boot panel.

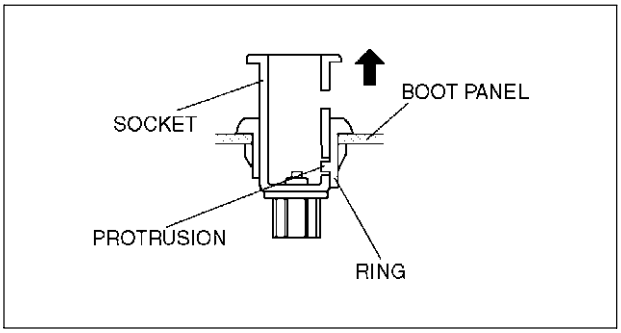

A6E8110W106

4. From behind the boot panel, slide a tape-wrapped screwdriver in between the socket and the ring protrusion..
5. While twisting the ring protrusion with the screwdriver, push out and remove the socket.

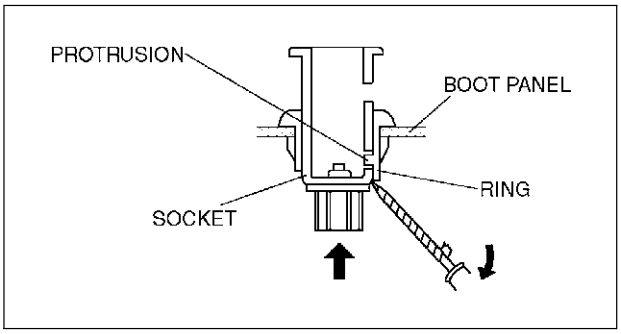

A6E8110W201

Ring Removal Note

1. Pull the ring forward while compressing the hooks.

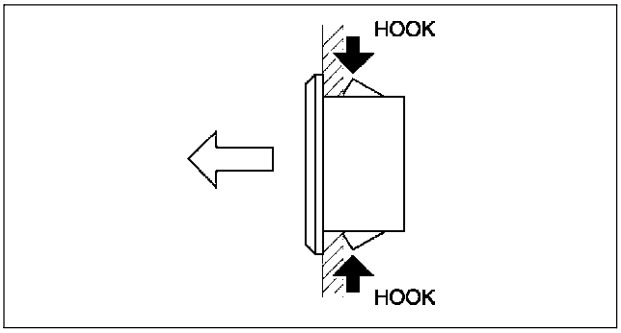

A6E8110W105

CIGARETTE LIGHTER INSPECTION

A6E811067000W02

1. Turn the ignition switch to ACC position.
2. Verify that the cigarette lighter comes out within **10—20 seconds**, after pressing the plug into the socket.
   - If the cigarette lighter does not operate normally, replace the cigarette lighter plug and socket.

RELAY LOCATION

A6E811067730W01

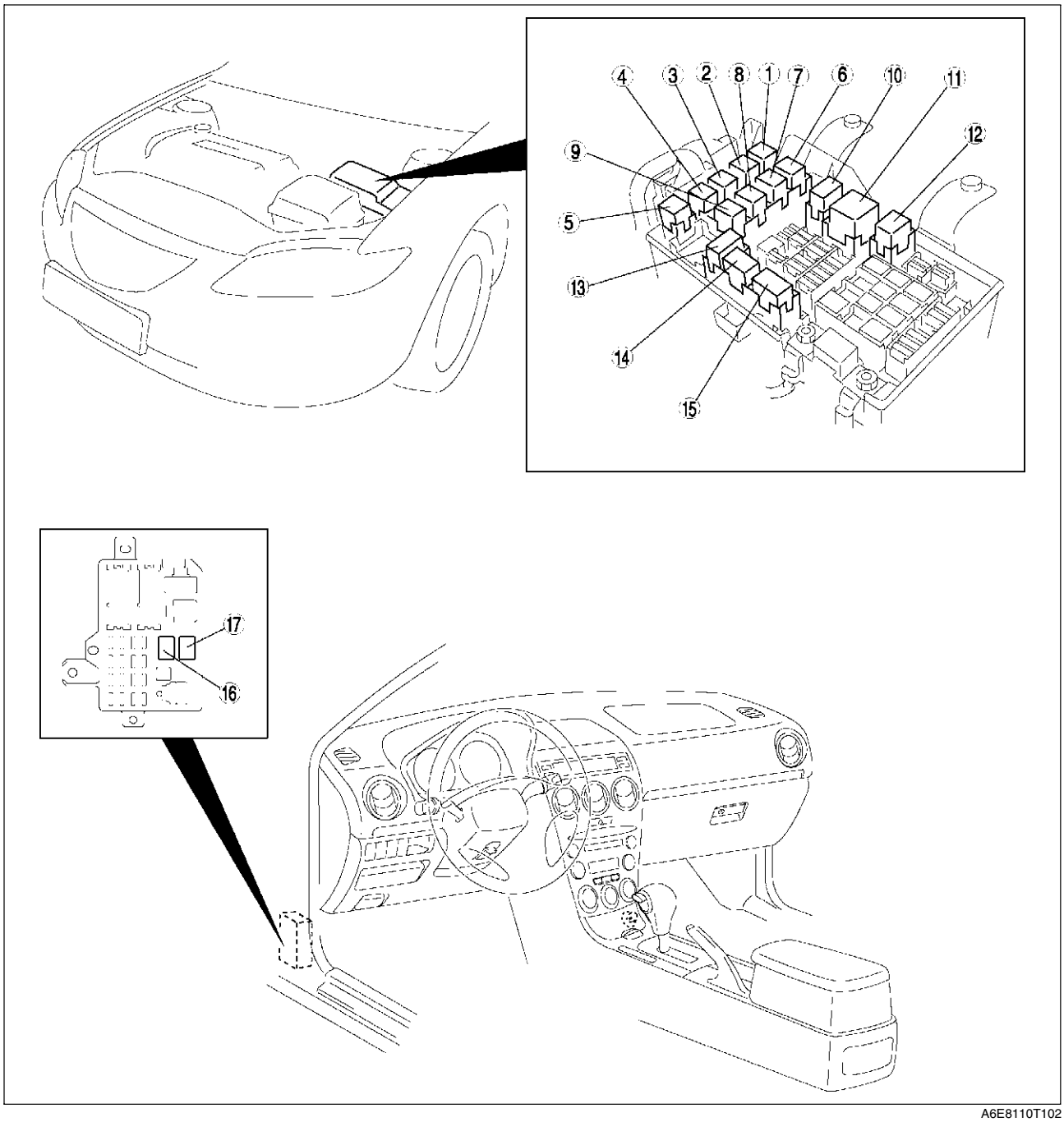

A6E8110T102

1	Cooling fan relay No.2
2	Horn relay
3	Cooling fan relay No.3
4	Stater relay
5	Cooling fan relay No.4
6	Woofer relay
7	Rear window defroster relay
8	Rear fog light relay
9	A/C relay

10	Main relay
11	Headlight relay
12	TNS relay
13	Cooling fan relay No.1
14	Headlight cleaner relay
15	Front fog light relay
16	Fuel pump relay
17	Blower relay

T

RELAY INSPECTION

A6E811067730W02

Relay Type

Terminal type		Parts name
Four-terminal	Type A	• Main relay • Fuel pump relay • Stater relay • TNS relay • Front fog light relay • Rear fog light relay • Horn relay • Headlight cleaner relay • Rear window defroster relay • Woofer relay • A/C relay • Blower relay • Cooling fan relay No.1 (except L3 engine) • Cooling fan relay No.2 • Cooling fan relay No.3 • Cooling fan relay No.4
	Type B	• Headlight relay
Five-terminal	Type C	• Cooling fan relay No.1 (L3 engine only)

Four-terminal

Type A

1. Remove the relay.
2. Inspect for continuity between the relay terminals using an ohmmeter.
   - If not as specified, replace the relay.

○—○ : Continuity

Step	Terminal			
	A	E	C	D
1	○	———	○	
2	B+	GND	○	——— ○

A6E8110W121

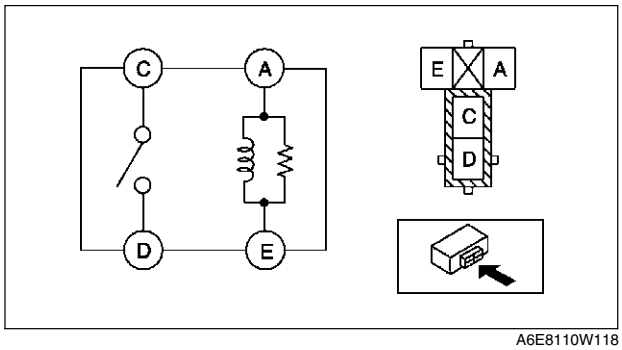

A6E8110W118

Type B

1. Remove the relay.
2. Inspect for continuity between the relay terminals using an ohmmeter.
   - If not as specified, replace the relay.

○—○ : Continuity

Step	Terminal			
	A	B	C	D
1	○	———	○	
2	B+	GND	○	——— ○

A6E8110W123

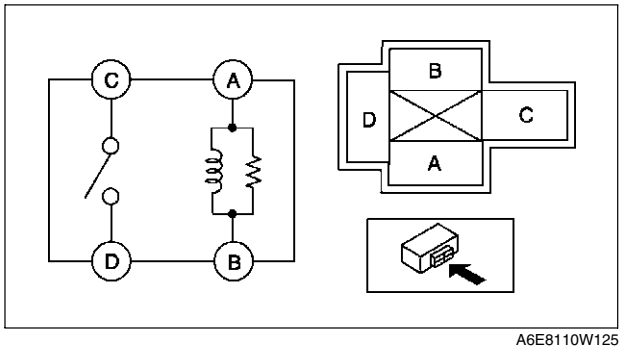

A6E8110W125

Type C

1. Remove the relay.
2. Inspect for continuity between the relay terminals using an ohmmeter.
   - If not as specified, replace the relay.

○—○ : Continuity

Step	Terminal				
	A	E	B	C	D
1	○	○	○		○
2	B+	GND		○	○

A6E8110W126

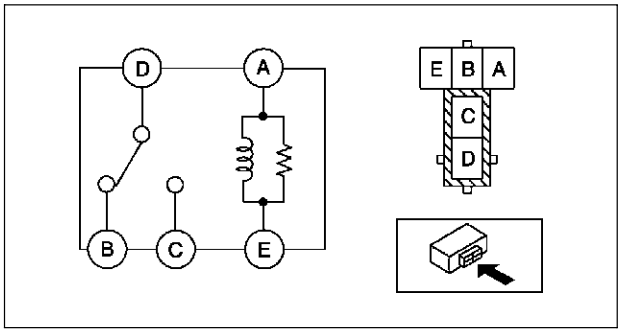

A6E8110W122

EXTERIOR LIGHTING SYSTEM

DISCHARGE HEADLIGHT SERVICE WARNINGS

A6E811251060W01

Discharge headlight bulb service warnings

- **To prevent electrical shock when replacing the discharge headlight bulb, dry hands thoroughly, and carry out work in an area out of rain.**
- **When the light switch is on, approx. 25,000 V of high voltage passes through the discharge headlight bulb socket. Because of the danger of electrical shock, do not insert fingers or a circuit tester.**
- **When the headlights are on, high voltage flows around the socket and bulb. When turning on the discharge headlights while working, always leave the headlights in the vehicle-installed condition to prevent electrical shock.**

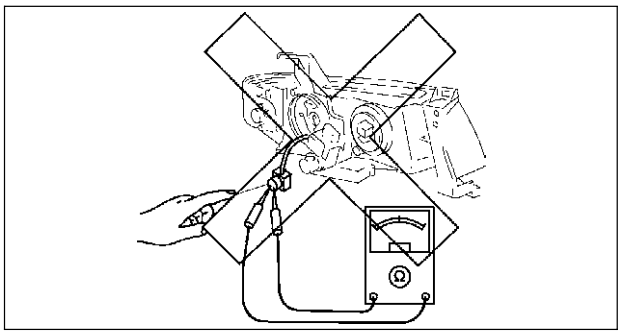

A6E8112W163

Discharge headlight control unit service warnings

- **Because of the danger of electrical shock, when inspecting with a circuit tester or similar device, do not inspect the discharge headlight control unit as a single unit or disassemble it.**
- **If there are scratches or damage to the discharge headlight control unit, or it has been impacted, there may be damage despite apparent normal operation. Therefore, to prevent electrical shock or operation error, replace with new parts.**

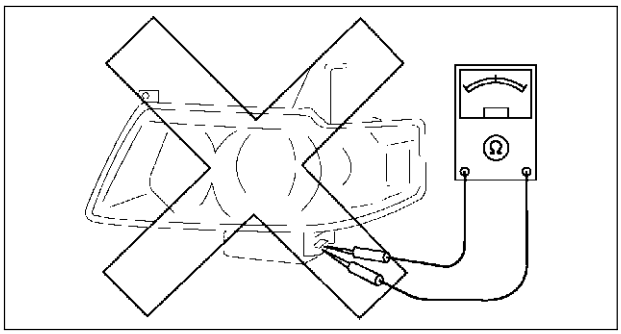

A6E8112W164

T

FRONT COMBINATION LIGHT REMOVAL/INSTALLATION

A6E811251060W02

Caution

- **Incorrect servicing of the discharge headlights could result in electrical shock. Before servicing the discharge headlights, always refer to the "Discharge headlight service warnings." (See T–25 DISCHARGE HEADLIGHT SERVICE WARNINGS)**

Note

- When the ignition switch is turned to ON, it is normal to hear the headlight leveling actuator operating for a few second, as it verifies headlight auto leveling system operating condition.

1. Disconnect the negative battery cable.
2. Remove the front bumper. (See S–47 FRONT BUMPER REMOVAL/INSTALLATION)
3. Remove in the order indicated in the table.

1	Connector
2	Bolt
3	Clip
4	Cover
5	Front combination light

4. Install in the reverse order of removal.
5. Adjust the headlight aiming. (See T–26 HEADLIGHT AIMING.)

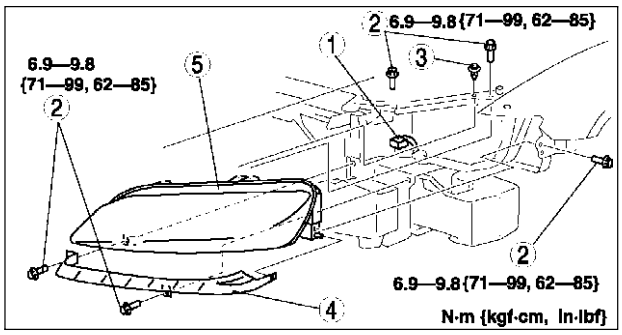

A6E8112W101

HEADLIGHT AIMING

A6E811251030W01

Low-beam

1. Set up a screen as shown in the figure below for aiming the headlights.

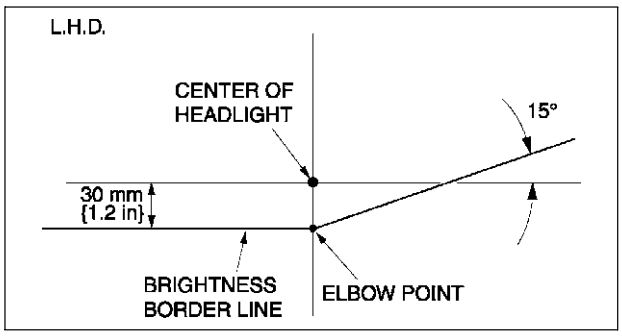

A6E8112W132

2. Adjust the tire air pressure to the specification.
3. Position the unloaded vehicle on a flat, level surface.
4. Seat one person in the driver's seat.
5. Position the vehicle straight ahead and perpendicular to a wall.

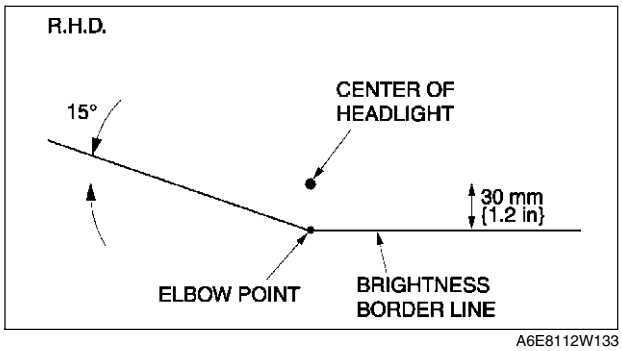

A6E8112W133

6. Set the headlights **3 m {10 ft}** from the wall.
7. While adjusting one headlight, mask the other.
8. Start the engine to charge the battery.
9. Turn on the lower-beam headlight.
10. Set the headlight leveling switch to 0 position.
11. Adjust the headlights by turning the adjusting screws as shown in the figure. Loosen the screws first, then tighten them.

Note
- If the adjusting screws are tightened first, then loosened, they will continue to loosen when the vehicle is in motion and may cause the headlights to become misaligned.

12. Turn the adjusting screws and adjust the headlight so that the elbow point in the shaded area in the figure.

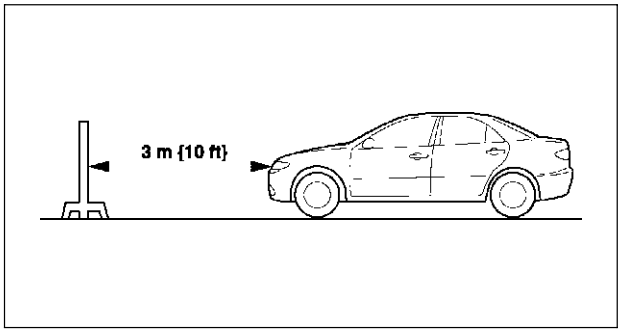

A6E8112W157

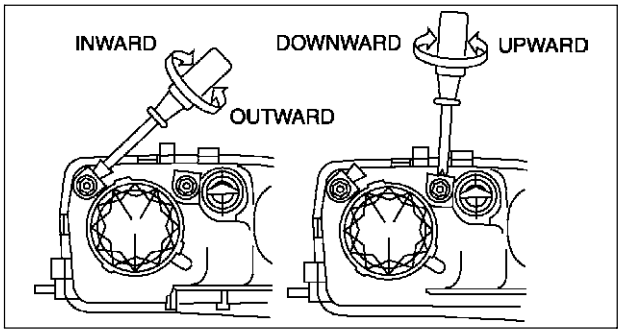

A6E8112W125

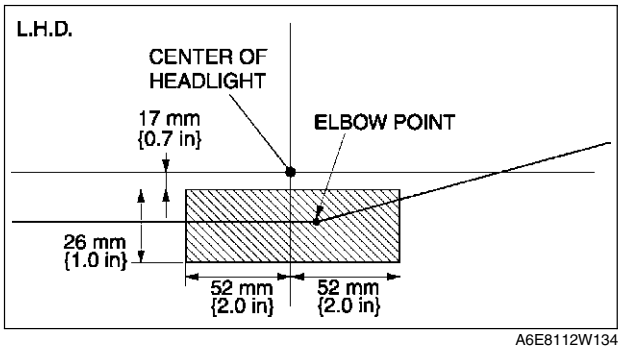

A6E8112W134

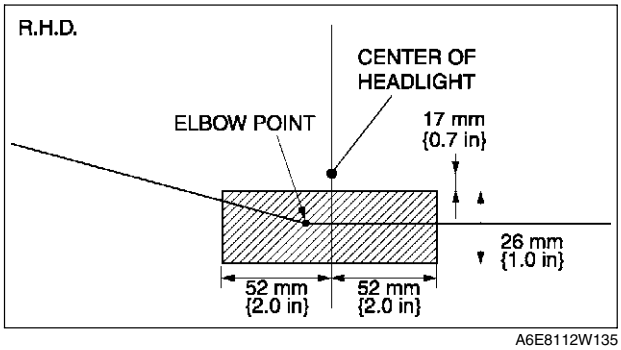

A6E8112W135

High-beam
1. Adjust the tire air pressure to the specification.
2. Position the unloaded vehicle on a flat, level surface.
3. Seat one person in the driver's seat.
4. Position the vehicle straight ahead and perpendicular to a wall.

5. Set the headlights **3 m {10 ft}** from the wall.
6. While adjusting one headlight, mask the other.
7. Start the engine to charge the battery.
8. Turn on the high-beam headlights.
9. Set the headlight leveling switch to 0 position.

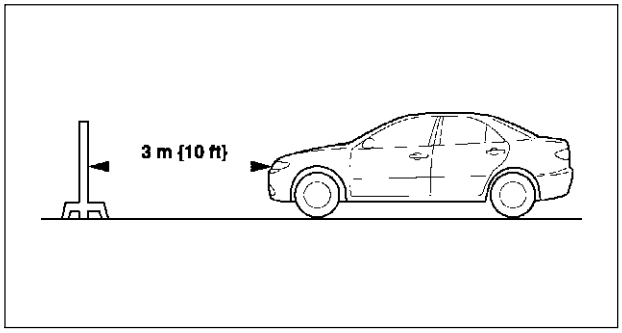

A6E8112W157

10. Adjust the headlights by turning the adjusting screws as shown in the figure. Loosen the screws first, then tighten them.

Note
- If the adjusting screws are tightened first, then loosened, they will continue to loosen when the vehicle is in motion and may cause the headlights to become misaligned.

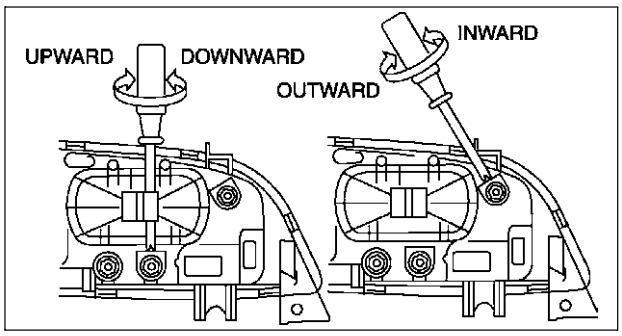

A6E8112W124

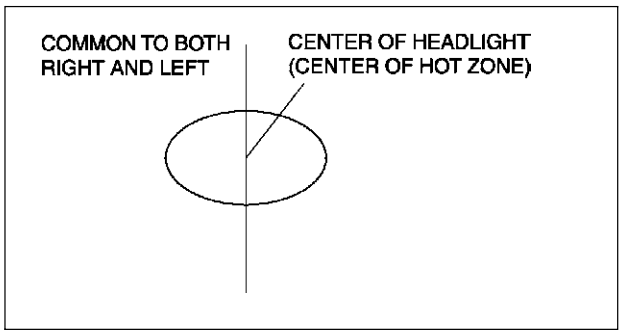

A6E8112W136

HEADLIGHT BULB REMOVAL/INSTALLATION

A6E811251030W02

Low-beam
Halogen type

1. Disconnect the negative battery cable.
2. Disconnect the front combination light. (See T–26 FRONT COMBINATION LIGHT REMOVAL/INSTALLATION)
3. Remove in the order indicated in the table.

1	Cover
2	Connector
3	Headlight bulb (See T–28 Headlight bulb removal note)

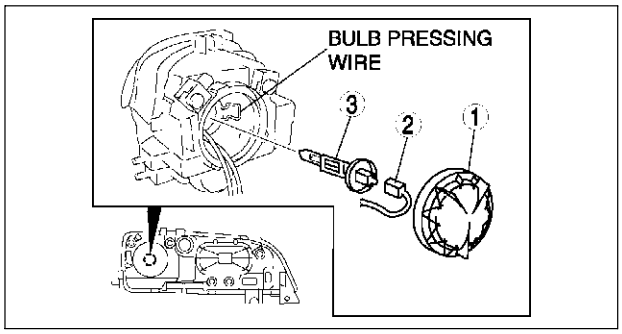

A6E8112W105

Caution
- **A halogen bulb generates extremely high heat when it is used. If the surface of the bulb is soiled, excessive heat will build up and the light's life will be shortened. When replacing the bulb, hold the metal flange, not the glass.**

4. Install in the reverse order of removal.

Headlight bulb removal note

1. Release the bulb pressing wire to remove the headlight bulb.

Discharge type

Caution
- **Incorrect servicing of the discharge headlights could result in electrical shock. Before servicing the discharge headlights, always refer to the "Discharge headlight service warnings." (See T–25 DISCHARGE HEADLIGHT SERVICE WARNINGS)**

1. Disconnect the negative battery cable.
2. Disconnect the front combination light. (See T–26 FRONT COMBINATION LIGHT REMOVAL/INSTALLATION)
3. Remove in the order indicated in the table.

1	Cover
2	Connector
3	Bulb cover
4	Discharge headlight bulb

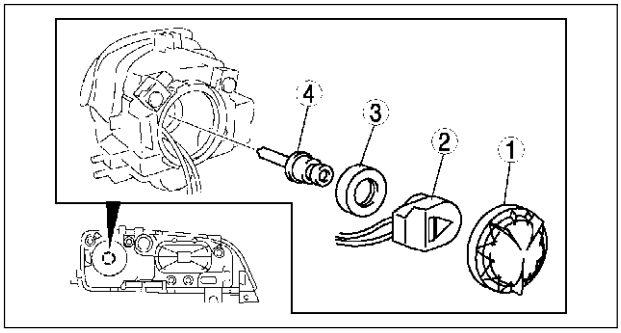

A6E8112W106

Caution
- **A bulb generates extremely high heat when it is used. If the surface of the bulb is soiled, excessive heat will build up and the light's life will be shortened. When replacing the bulb, hold the metal flange, not the glass.**

4. Install in the reverse order of removal.

High-beam
1. Disconnect the negative battery cable.
2. Remove in the order indicated in the table.

1	Cover
2	Connector
3	Headlight bulb (See T–28 Headlight bulb removal note)

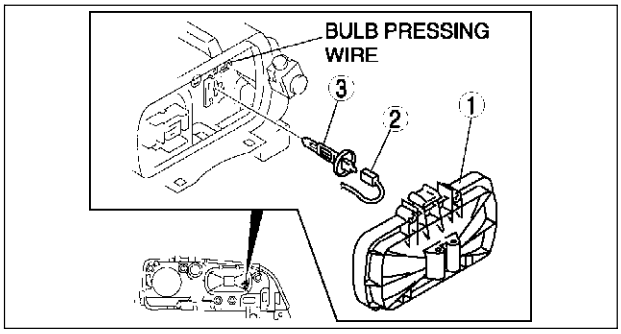

A6E8112W107

Caution
- **A halogen bulb generates extremely high heat when it is used. If the surface of the bulb is soiled, excessive heat will build up and the light's life will be shortened. When replacing the bulb, hold the metal flange, not the glass.**

3. Install in the reverse order of removal.

Headlight bulb removal note
1. Release the bulb pressing wire to remove the headlight bulb.

T

DISCHARGE HEADLIGHT CONTROL UNIT REMOVAL/INSTALLATION

A6E811251030W03

Caution

- **Incorrect servicing of the discharge headlight control unit could result in electrical shock. Before servicing the discharge headlight control unit, always refer to the "Discharge headlight service warnings." (See T–25 DISCHARGE HEADLIGHT SERVICE WARNINGS)**
- **When replacing the discharge headlight control unit, configuration procedure must be done before removing the auto leveling control unit. After replacing the discharge headlight control unit, perform the headlight zeroset for auto leveling control unit.**

1. Configurate the discharge headlight control unit (when only replacing it). (See T–30 AUTO LEVELING CONTROL UNIT CONFIGURATION)
2. Disconnect the negative battery cable.
3. Remove the front combination light. (See T–26 FRONT COMBINATION LIGHT REMOVAL/INSTALLATION)
4. Remove in the order indicated in the table.

1	Bolt
2	Discharge headlight control unit

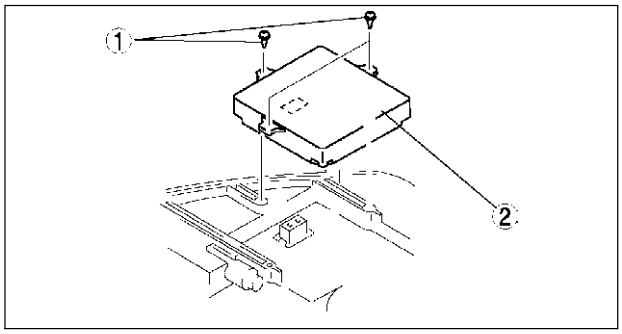

A6E8112W141

5. Install in the reverse order of removal.
6. Perform the headlight zeroset for the discharge headlight control unit (when only replacing it). (See T–31 HEADLIGHT ZEROSET)

AUTO LEVELING CONTROL UNIT CONFIGURATION

A6E811251030W04

1. Connect the **SST** (WDS or equivalent) to the DLC-2.
2. Input vehicle information following the directions on the screen.
3. Select "Module programming".
4. Select "Programmable module installation".
5. When performing configuration corresponding to each auto leveling control unit, select the following items and perform procedures according to directions on the screen.

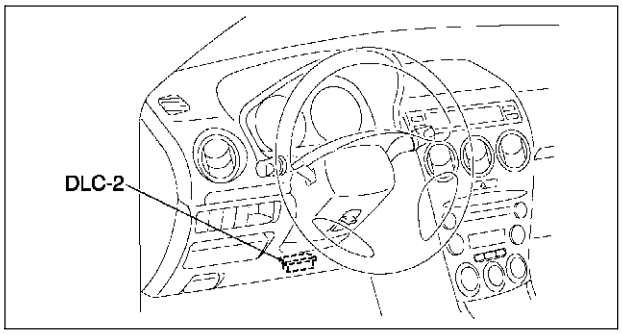

A6E3970W002

Items

- **Main: "LHID"**
- **Sub: "RHID"**

6. Retrieve DTCs by the WDS or equivalent, then verify that there is no DTC present.
   - If DTC is present, perform applicable DTC inspection.

HEADLIGHT ZEROSET

A6E811251030W05

Note
- When the configuration is not set for the auto leveling control unit, headlight zeroset cannot be executed.

1. Adjust the tire air pressure to the specification.
2. Position the unloaded vehicle on a flat, level surface.
3. Connect the **SST** (WDS or equivalent) to the DLC-2.
4. Turn the ignition switch to ON position.
5. Turn on the headlights (low-beam).
6. Input the vehicle information following the directions on the screen.
7. Confirm that the WDS or equivalent identifies the vehicle, and select “Datelogger”.
8. After the screen appears, select “LHID” under “Modules” from the cascading menu.
9. After the next screen appears, select “CALAXLSN#”.
10. On the graphic display that appears, press the icon near the top right of the screen indicated by a 1 in the figure.

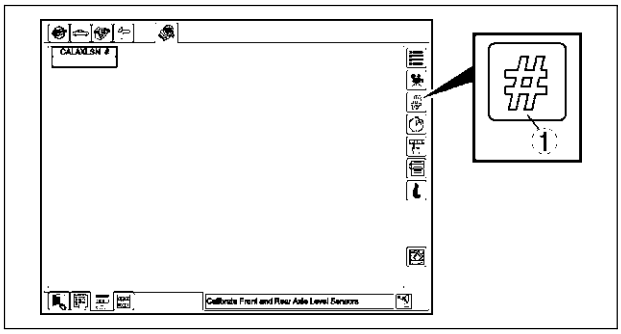

A6E8112W158

11. After the next screen appears, press the icon indicated by a 2 in the figure.
12. After pressing the icon indicated by the 2, press the icon indicated by a 3 or 4 in the figure to execute the zeroset setting.

Note
- Pressing an icon indicated by 3 or 4 once will execute the headlight zeroset setting.

13. After executing the headlight zeroset setting, perform an on-board diagnostic test and verify that no DTCs are displayed.
14. Perform the headlight aiming adjustment. (See T–26 HEADLIGHT AIMING)

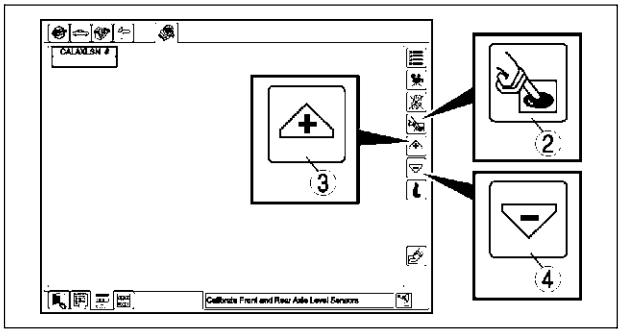

A6E8112W159

T

FRONT AUTO LEVELING SENSOR REMOVAL/INSTALLATION

A6E811251030W06

1. Disconnect the negative battery cable.
2. Jack up the vehicle and remove the wheel and tire.
3. Remove in the order indicated in the table.

1	Connector
2	Bolt
3	Bracket
4	Front auto leveling sensor

4. Install in the reverse order of removal.
5. Adjust the headlight zeroset. (See T–31 HEADLIGHT ZEROSET)

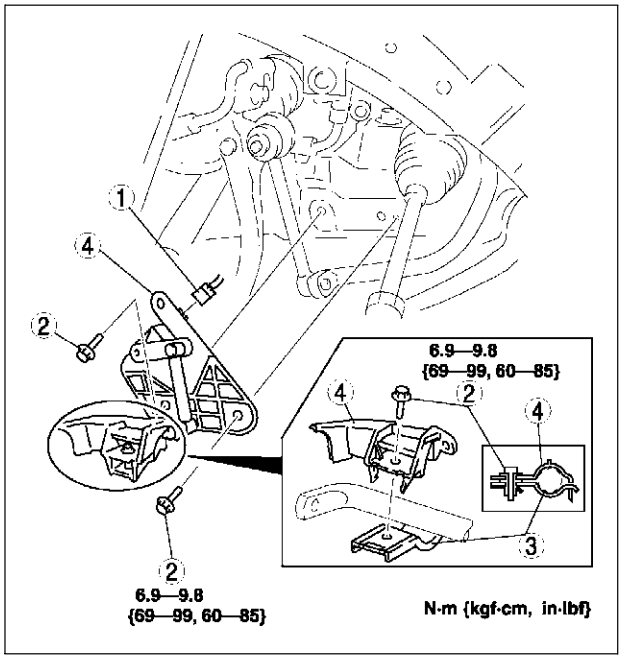

A6E8112W165

REAR AUTO LEVELING SENSOR REMOVAL/INSTALLATION

A6E811251030W07

1. Disconnect the negative battery cable.
2. Jack up the vehicle.
3. Remove in the order indicated in the table.

1	Connector
2	Bolt
3	Rear auto leveling sensor

4. Install in the reverse order of removal.
5. Adjust the headlight zeroset. (See T–31 HEADLIGHT ZEROSET)

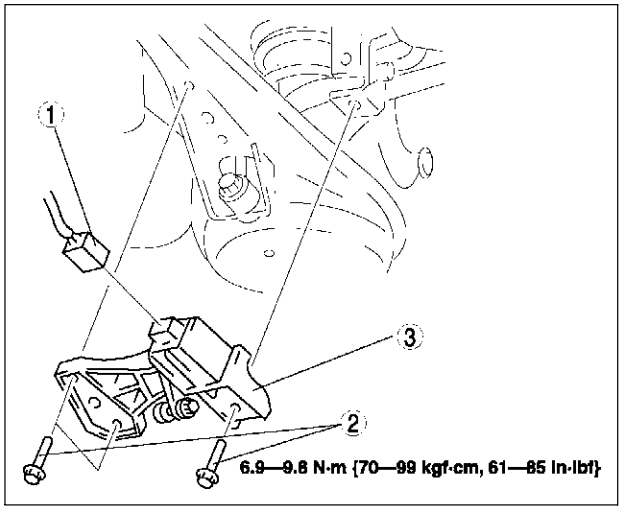

A6E8112W156

PARKING LIGHT BULB REMOVAL/INSTALLATION

A6E811251040W01

1. Disconnect the negative battery cable.
2. Remove in the order indicated in the table.

1	Cover
2	Socket
3	Parking light bulb

3. Install in the reverse order of removal.

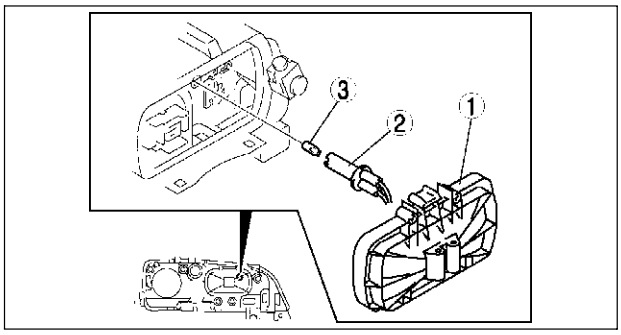

A6E8112W109

FRONT TURN LIGHT REMOVAL/INSTALLATION

A6E811251050W01

1. Disconnect the negative battery cable.
2. Remove in the order indicated in the table.

1	Socket
2	Front turn light bulb

3. Install in the reverse order of removal.

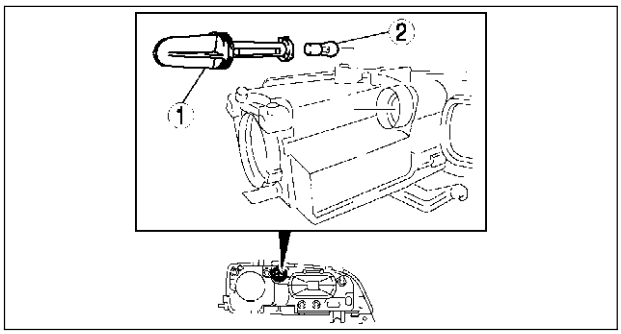

A6E8112W110

T

FRONT SIDE TURN LIGHT REMOVAL/INSTALLATION

A6E811268370W01

1. Disconnect the negative battery cable.
2. Remove in the order indicated in the table.

1	Front side turn light
2	Connector

3. Install in the reverse order of removal.

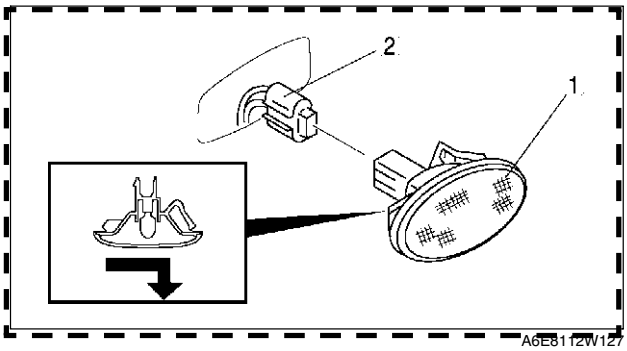

A6E8112W127

FRONT FOG LIGHT AIMING

A6E811251680W01

1. Adjust the tire air pressure to the specification.
2. Position the unloaded vehicle on a flat, level surface.
3. Seat one person in the driver's seat.
4. Position the vehicle **3 m {10 ft}** in front of a white screen.
5. While adjusting one fog light, mask the other.
6. Start the engine to charge the battery.
7. Turn the front fog light on.

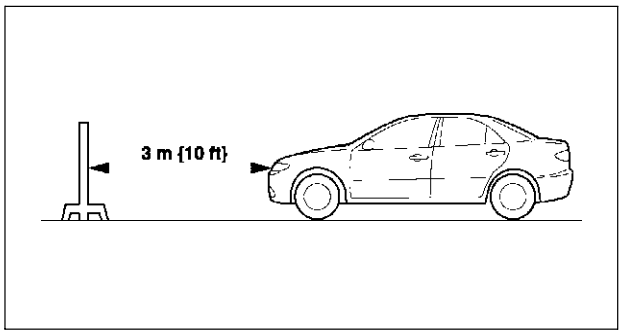

A6E8112W157

8. Adjust the front fog light by turning the adjusting screws as shown in the figure. Loosen the screws first, then tighten them.

Note

- If the adjusting screws are tightened first, then loosened, they will continue to loosen when the vehicle is in motion and may cause the front fog lights to become misaligned.

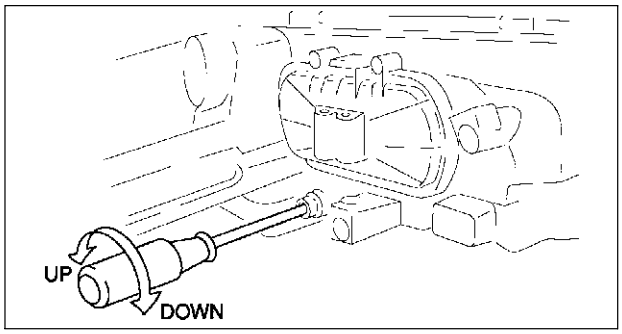

A6E8112W117

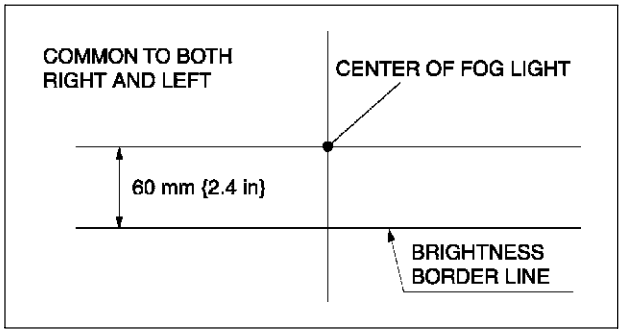

A6E8112W137

FRONT FOG LIGHT BULB REMOVAL/INSTALLATION

A6E811251680W02

1. Disconnect the negative battery cable.
2. Remove in the order indicated in the table.

1	Cover
2	Connector
3	Front fog light bulb (See T–34 Front Fog Light Bulb Removal Note)

Caution

- **A halogen bulb generates extremely high heat when it is used. If the surface of the bulb is soiled, excessive heat will build up and the light's life will be shortened. When replacing the bulb, hold the metal flange, not the glass.**

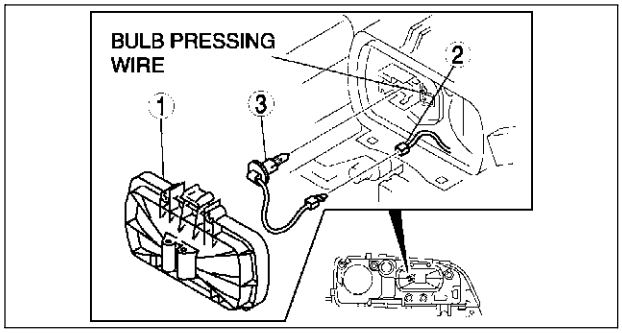

A6E8112W111

3. Install in the reverse order of removal.

Front Fog Light Bulb Removal Note

1. Release the bulb pressing wire to remove the front fog light bulb.

REAR COMBINATION LIGHT REMOVAL/INSTALLATION

A6E811251150W01

1. Disconnect the negative battery cable.
2. Remove the trunk side trim. (See S–92 TRUNK SIDE TRIM REMOVAL/INSTALLATION)
3. Remove in the order indicated in the table.

1	Connector
2	Bolt
3	Rear combination light
4	Socket
5	Rear turn light bulb
6	Brake light/taillight bulb

4. Install in the reverse order of removal.

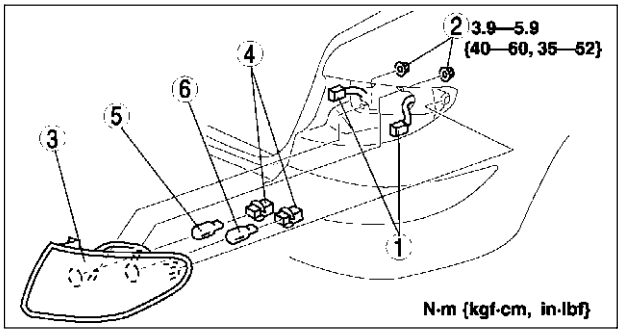

A6E8112W118

INBOARD COMBINATION LIGHT REMOVAL/INSTALLATION

A6E811251380W01

1. Disconnect the negative battery cable.
2. Remove the trunk lid trim (liftgate lower trim). (See S–93 TRUNK LID TRIM REMOVAL/INSTALLATION) (See S–95 LIFTGATE LOWER TRIM REMOVAL/INSTALLATION)
3. Remove in the order indicated in the table.

1	Connector
2	Nut
3	Inboard combination light (See T–35 Inboard Combination Light Installation Note)
4	Socket
5	Back-up light bulb
6	Rear fog light bulb (L.H.D.: left side only, R.H.D.: right side only)

4. Install in the reverse order of removal.

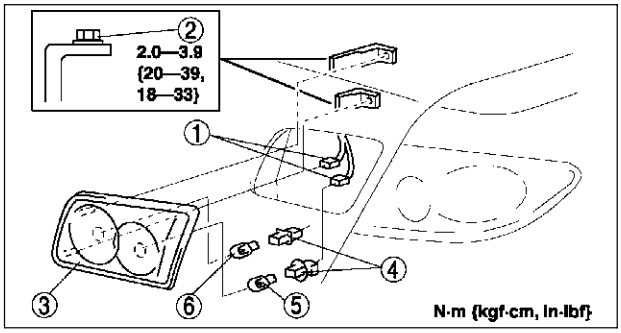

A6E8112W119

Inboard Combination Light Installation Note

1. Insert the inboard combination light into the trunk lid (liftgate) as shown in the figure, then pivot it inward and fix in place.

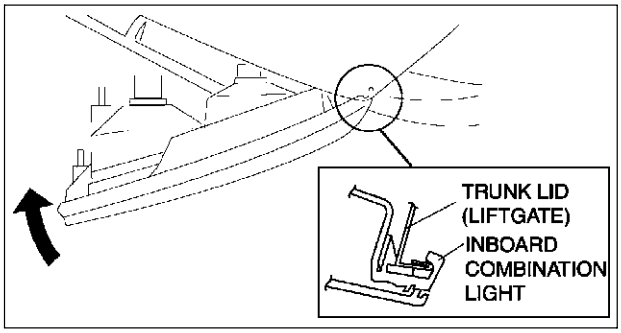

A6E8112W120

T

2. Pleace the bracket in the proper position as shown in the figure and press it to the trunk lid (liftgate) to attach.

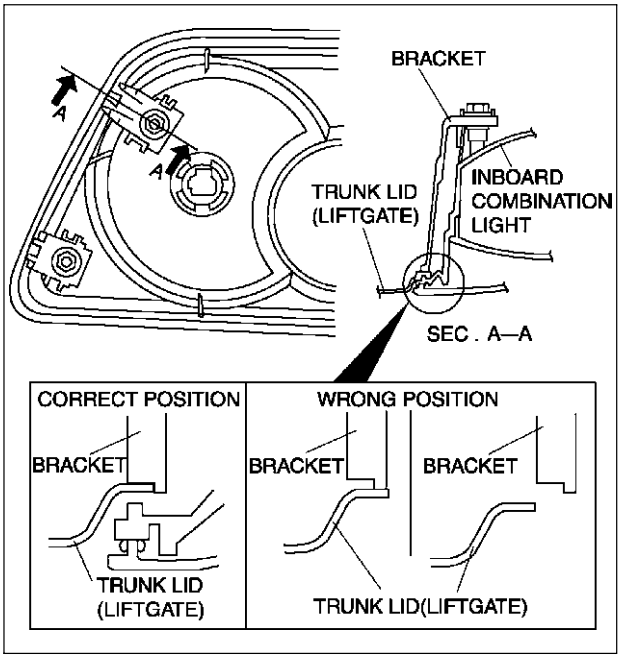

A6E8112W121

HIGH-MOUNT BRAKE LIGHT REMOVAL/INSTALLATION

A6E811251580W01

4SD

In-vehicle-type

1. Disconnect the negative battery cable.
2. Remove in the order indicated in the table.

1	Connector
2	High-mount brake light
3	Socket
4	High-mount brake light bulb

3. Install in the reverse order of removal.

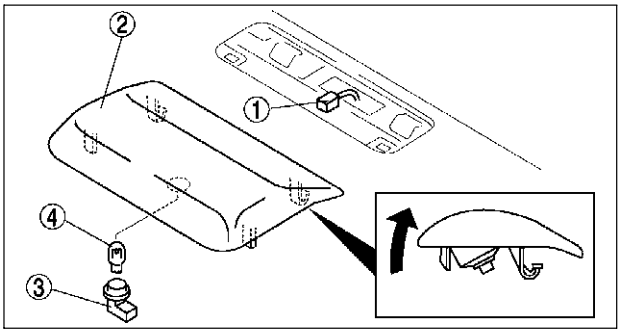

A6E8112W123

Rear spoiler type

1. Disconnect the negative battery cable.
2. Remove the rear spoiler. (See S–54 REAR SPOILER REMOVAL/INSTALLATION)
3. Remove in the order indicated in the table.

1	Bolt
2	Cover
2	High-mount brake light (See T–37 High-mount brake light removal note)

4. Install in the reverse order of removal.

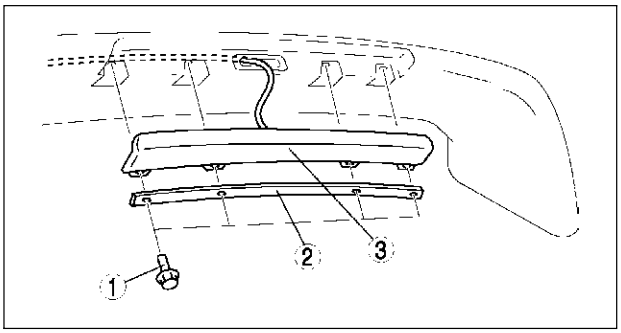

A6E8112W115

High-mount brake light removal note

1. Tie a string to the end of the connector of the high-mount brake light beforehand so that the connector can be passed easily through the rear spoiler during installation.

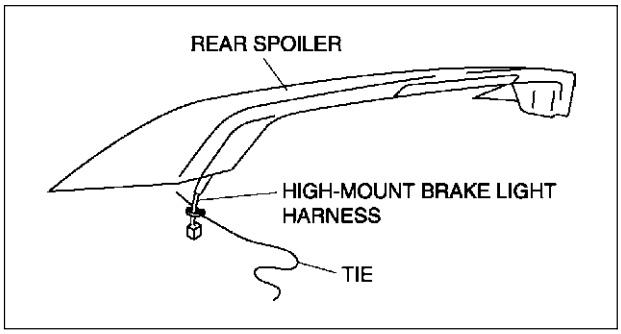

A6E8112W116

5HB

1. Disconnect the negative battery cable.
2. Remove the liftgate lower trim. (See S–95 LIFTGATE LOWER TRIM REMOVAL/INSTALLATION)
3. Remove in the order indicated in the table.

1	Connector
2	Nut
3	High-mount brake light
4	Lens
5	Socket
6	High-mount brake light bulb

4. Install in the reverse order of removal.

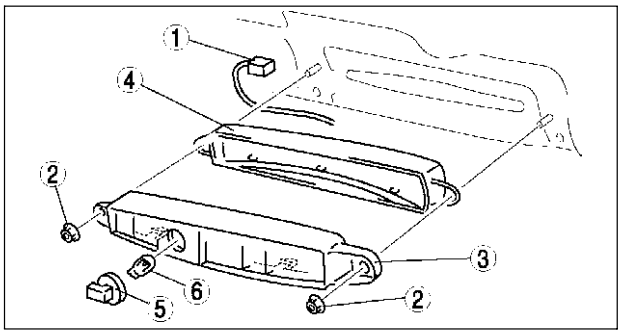

A6E8112W142

T

LICENSE PLATE LIGHT REMOVAL/INSTALLATION

A6E811251270W01

1. Disconnect the negative battery cable.
2. Remove the rear finisher. (See S–54 REAR FINISHER REMOVAL/INSTALLATION)
3. Remove in the order indicated in the table.

1	Connector
2	License plate light
3	Lens
4	License plate light bulb

4. Install in the reverse order of removal.

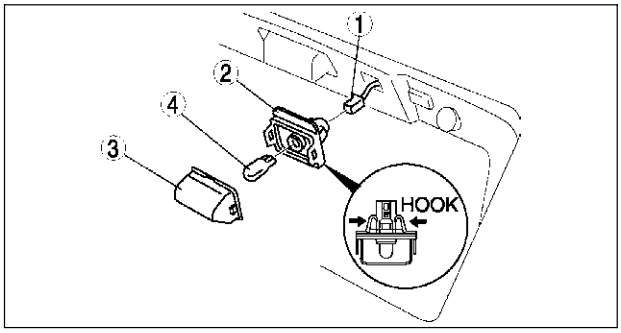

A6E8112W108

COMBINATION SWITCH REMOVAL/INSTALLATION

A6E811266120W01

1. Disconnect the negative battery cable.
2. Remove the driver-side air bag module. (See T–120 DRIVER-SIDE AIR BAG MODULE REMOVAL/INSTALLATION.)
3. Remove the steering wheel. (See N–7 STEERING WHEEL AND COLUMN REMOVAL/INSTALLATION.)
4. Remove the column cover. (See S–84 COLUMN COVER REMOVAL/INSTALLATION)
5. Remove the clock spring. (without DSC) (See T–125 CLOCK SPRING REMOVAL/INSTALLATION.)

6. Remove in the order indicated in the table.

1	Connector
2	Screw
3	Combination switch

7. Install in the reverse order of removal.

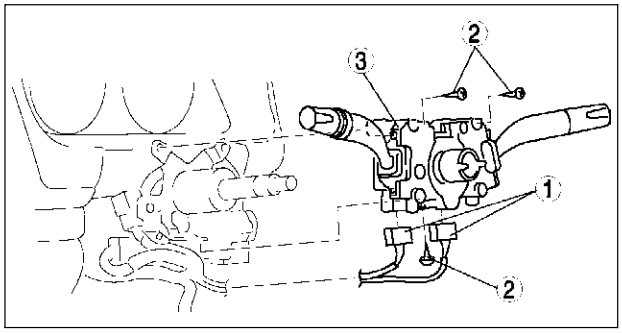

A6E8112W102

COMBINATION SWITCH DISASSEMBLY/ASSEMBLY

A6E811266120W02

1. Disassemble in the order indicated in the table.
2. Assemble in the reverse order of disassembly.

1	Screw
2	Wiper and washer switch (Light switch)
3	Light switch (Wiper and washer switch)
4	Body

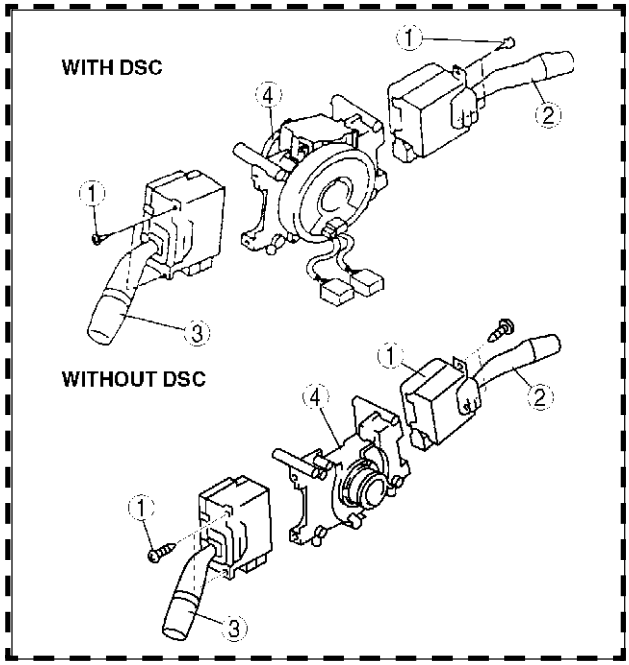

A6E8112W103

STEERING ANGLE SENSOR INSPECTION

A6E811266120W03

With DSC

1. Remove the column cover. (See S–84 COLUMN COVER REMOVAL/INSTALLATION)
2. Disconnect the steering angle sensor connector.
3. Connect battery positive voltage to terminal A and ground to terminal F of the steering angle sensor.
4. Turn the steering wheel to the right and left, and verify that the voltage and pulses at the terminals are as shown in the figure.
   - If not as specified, replace the body of the combination switch.

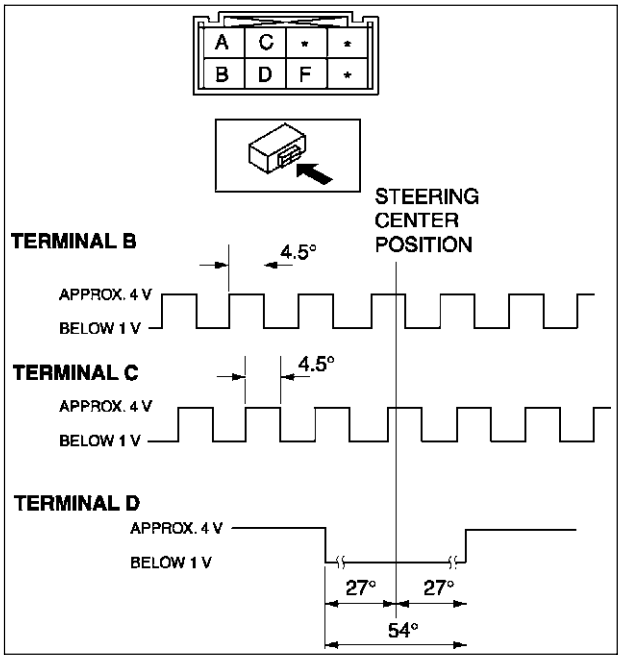

A6E8112W143

LIGHT SWITCH REMOVAL/INSTALLATION

A6E811266121W01

1. Disconnect the negative battery cable.
2. Remove the column cover. (See S–84 COLUMN COVER REMOVAL/INSTALLATION)
3. Remove in the order indicated in the table.

1	Connector
2	Screw
3	Light switch

4. Install in the reverse order of removal.

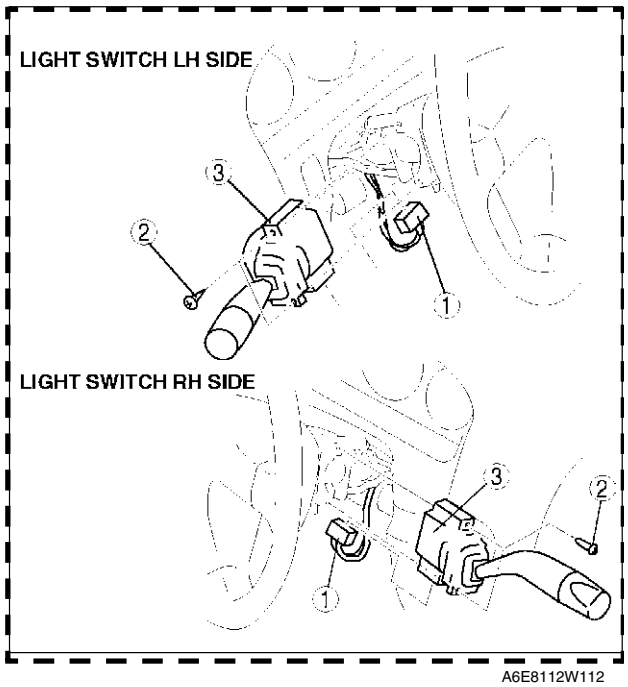

A6E8112W112

LIGHT SWITCH INSPECTION

A6E811266121W02

Light switch LH side

1. Remove the light switch. (See T–39 LIGHT SWITCH REMOVAL/INSTALLATION)
2. Inspect for continuity between the light switch terminals using an ohmmeter.
   - If not as specified, replace the light switch.

Headlight switch

○—○ : Continuity

Switch position			Terminal					
Light	Dimmer	Flash-to-pass	J	L	P	O	Q	R
OFF	-	Off						
		On			○	○	○	
TNS	-	Off		○	○			
		On		○	○	○	○	
Head-light	LO	Off	○	○	○			○
		On	○	○	○	○	○	
	HI	-	○	○	○	○		

A6E8112W129

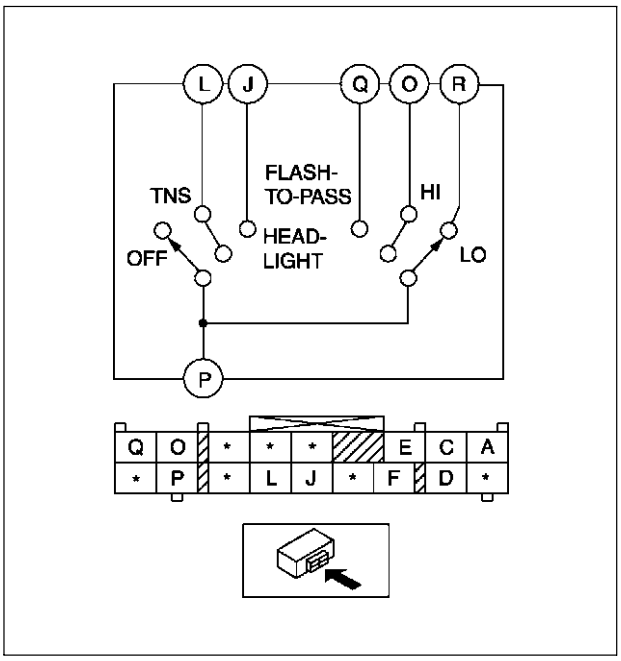

A6E8112W144

Turn switch

○—○ : Continuity

Switch position	Terminal		
	C	A	E
Left	○	○	
Off			
Right	○		○

A6E8112W130

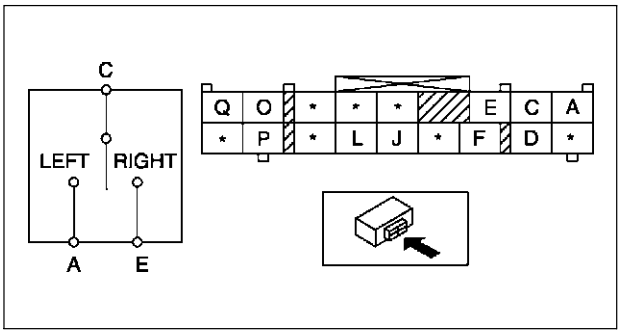

A6E8112W145

Light switch RH side

1. Remove the light switch. (See T–39 LIGHT SWITCH REMOVAL/INSTALLATION)
2. Inspect for continuity between the light switch terminals using an ohmmeter.
   - If not as specified, replace the light switch.

Headlight switch

○—○ : Continuity

Switch position			Terminal					
Light	Dimmer	Flash-to-pass	L	N	B	C	A	D
OFF	-	Off						
		On			○	○	○	
TNS	-	Off		○	○			
		On		○	○	○	○	
Head-light	LO	Off	○	○	○			○
		On	○	○	○	○	○	
	HI	-	○	○	○	○		

A6E8112W131

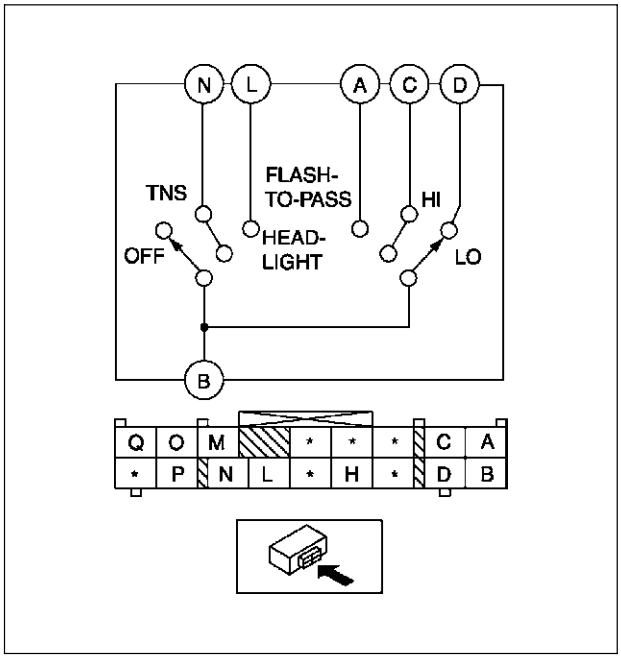

A6E8112W146

Turn switch

○—○ : Continuity

Switch position	Terminal		
	O	M	Q
Left	○	○	
Off			
Right	○		○

A6E8112W139

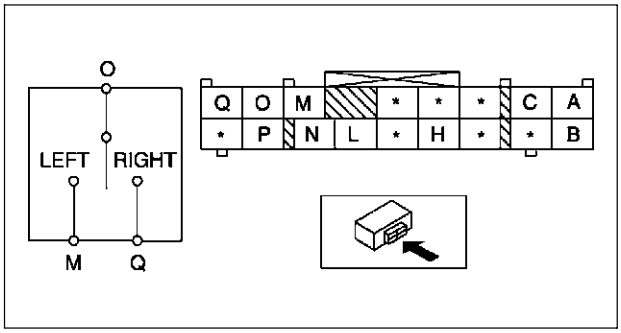

A6E8112W147

HAZARD WARNING SWITCH INSPECTION

A6E811266401W01

1. Inspection the hazard warning switch. (See U–47 CLIMATE CONTROL UNIT INSPECTION)

T

FRONT AND REAR FOG LIGHT SWITCH INSPECTION

A6E811266402W01

Light switch LH side

1. Remove the light switch. (See T–39 LIGHT SWITCH REMOVAL/INSTALLATION.)
2. Inspect for continuity between the light switch terminals using an ohmmeter.
   - If not as specified, replace the light switch.

○—○ : Continuity

Switch position			Terminal		
Light	Front fog light switch	Front and rear fog light switch	D	F	P
OFF	Off	-			
	On	-	○		○
TNS	On	Off	○		○
	On	On	○	○	○
Head-light	On	Off	○		○
	On	On	○	○	○

A6E8112W140

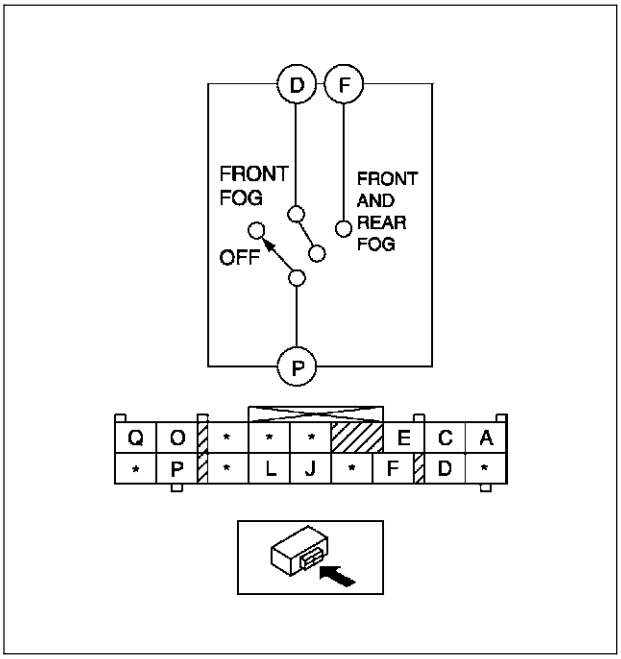

A6E8112W148

Light switch RH side

1. Remove the light switch. (See T–39 LIGHT SWITCH REMOVAL/INSTALLATION.)
2. Inspect for continuity between the light switch terminals using an ohmmeter.
   - If not as specified, replace the light switch.

○—○ : Continuity

Switch position			Terminal		
Light	Front fog light switch	Front and rear fog light switch	P	H	B
OFF	Off	-			
	On	-	○		○
TNS	On	Off	○		○
	On	On	○	○	○
Head-light	On	Off	○		○
	On	On	○	○	○

A6E8112W166

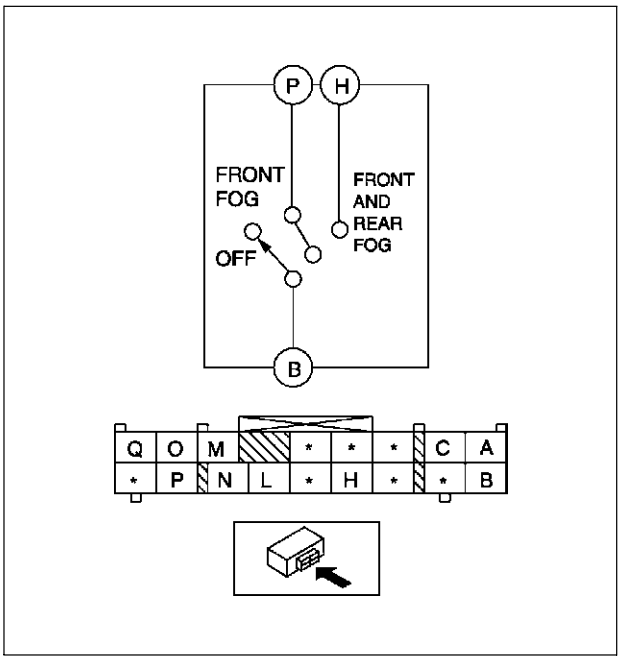

A6E8112W167

HEADLIGHT LEVELING SWITCH REMOVAL/INSTALLATION

A6E811251030W08

1. Disconnect the negative battery cable.
2. Remove in the order indicated in the table.

1	Headlight leveling switch (See T–43 Headlight Leveling Switch Removal Note)
2	Connector

3. Install in the reverse order of removal.

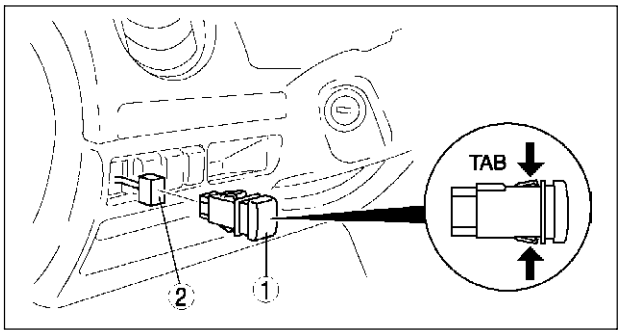

A6E8112W138

Headlight Leveling Switch Removal Note

1. Insert your hand from the lower side of the dashboard and squeeze the tabs of the headlight leveling switch.
2. Pull the headlight leveling switch forward to remove it.

HEADLIGHT LEVELING SWITCH INSPECTION

A6E811251030W09

1. Remove the headlight leveling switch. (See T–43 HEADLIGHT LEVELING SWITCH REMOVAL/INSTALLATION.)
2. Inspect for continuity between the headlight leveling switch terminals using an ohmmeter.
   - If not as specified, replace the headlight leveling switch.

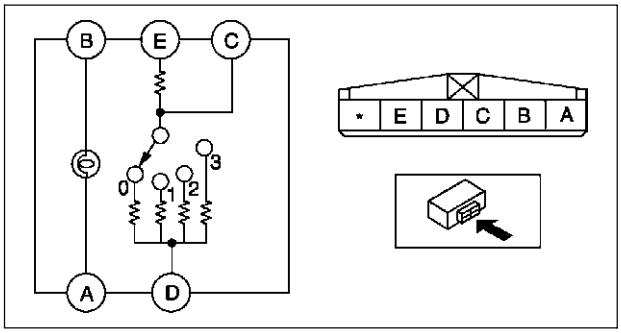

A6E8112W152

: Resistance : Bulb

Switch position	Terminal				
	E	C	D	B	A
0		R_1	R_2		
1		R_1	R_3		
2		R_1	R_4		
3		R_1	R_5		

R_1: 300 ohms R_2: 2700 ohms R_3: 866 ohms
R_4: 620 ohms R_5: 442 ohms

A6E8112W151

BACK-UP LIGHT SWITCH REMOVAL/INSTALLATION

A6E811217640W01

1. Disconnect the negative battery cable.
2. Remove in the order indicated in the table.

1	Connector
2	Back-up light switch

3. Install in the reverse order of removal.

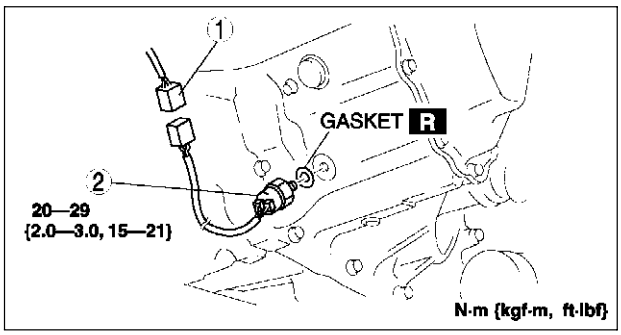

A6E8112W104

T

BACK-UP LIGHT SWITCH INSPECTION

A6E811217640W02

1. Disconnect the back-up light switch connector.
2. Inspect for continuity between the back-up light switch terminals using an ohmmeter.
   - If not as specified, replace the back-up light switch.

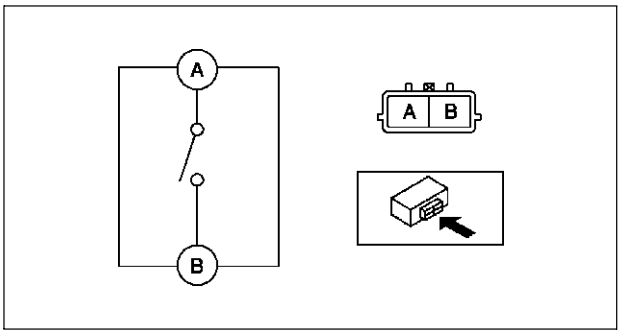

A6E8112W153

○—○ : Continuity

Shift lever position	Terminal A	Terminal B
Reverse	○	○
Other		

A6E8112W128

FLASHER UNIT REMOVAL/INSTALLATION

A6E811266830W01

1. Disconnect the negative battery cable.
2. Remove the instrument cluster. (See T–72 INSTRUMENT CLUSTER REMOVAL/INSTALLATION)
3. Remove in the order indicated in the table.

1	Connector
2	Screw
3	Flasher unit

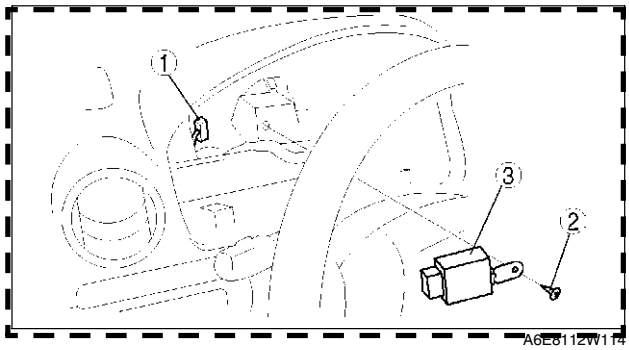

A6E8112W114

4. Install in the reverse order of removal.

FLASHER UNIT INSPECTION

A6E811266830W02

1. Connect the connector to the flasher unit.
2. Connect the negative battery cable.
3. Measure the voltage at the flasher unit using voltmeter.
   - When inspecting terminal F for continuity, disconnect the flasher unit connector.
4. If the value are not as specified in the Terminal Voltage List (Reference), inspect the parts under “Action” and related wiring harnesses.
5. If the system does not work properly even though the parts or related wiring harnesses do not have any malfunction, replace the flasher unit.

Terminal Voltage List (Reference)

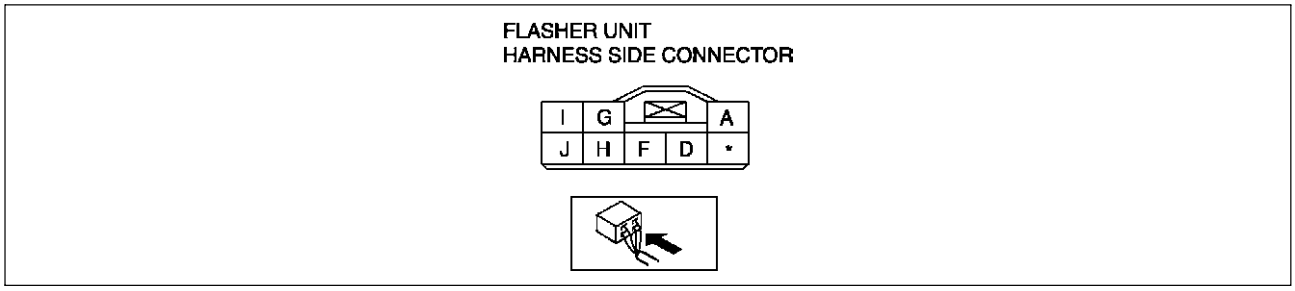

A6E8112W154

Terminal	Signal	Connected to	Test condition	Voltage (V)/ Continuity	Action
A	Power supply	HAZARD 10 A fuse	Under any condition	B+	• Inspect HAZARD 10 A fuse • Inspect related harness
D	Turn signal flasher (LH)	Turn signal light (LH)	Turn signal light (LH) flashes	Alternates below 1.0 and B+	• Inspect turn signal light (LH) • Inspect related harness
			Hazard warning switch at on position		
			Other	Below 1.0	
F	Flasher unit ground	GND	Constant: inspect for continuity to ground	Yes	• Inspect GND
G	Turn signal flasher (RH)	Turn signal light (RH)	Turn signal light (RH) flashes	Alternates below 1.0 and B+	• Inspect turn signal light (RH) • Inspect related harness
			Hazard warning switch at on position		
			Other	Below 1.0	
H	Hazard warning on	Hazard warning switch	Hazard warning switch at on position	Below 1.0	• Inspect hazard warning switch • Inspect related harness
			Hazard warning switch at off position	B+	
I	Turn switch on/ off (RH)	Combination switch	Ignition switch is at ON and turn switch (RH) on	B+	• Inspect combination switch • Inspect related harness
			Other	Below 1.0	
J	Turn switch on/ off (LH)	Combination switch	Ignition switch is at ON and turn switch (LH) on	B+	• Inspect combination switch • Inspect related harness
			Other	Below 1.0	

RUNNING LIGHT UNIT REMOVAL/INSTALLATION

A6E811266731W01

1. Disconnect the negative battery cable.
2. Remove the glove compartment. (See S–85 GLOVE COMPARTMENT REMOVAL/INSTALLATION)
3. Remove in the order indicated in the table.

1	Nut
2	Running light unit
3	Connector

4. Install in the reverse order of removal.

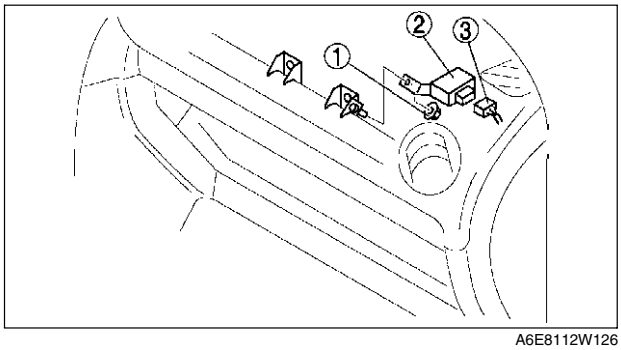

A6E8112W126

T

RUNNING LIGHT UNIT INSPECTION

A6E811266731W02

1. Connect the connector to the running light unit.
2. Connect the negative battery cable.
3. Measure the voltage at the running light unit using voltmeter.
   - When inspecting terminal D, H or P for continuity, disconnect the running light unit connector.
4. If the value are not as specified in the Terminal Voltage List (Reference), inspect the parts under “Action” and related wiring harnesses.
5. If the system does not work properly even though the parts or related wiring harnesses do not have any malfunction, replace the running light unit.

Terminal Voltage List (Reference)

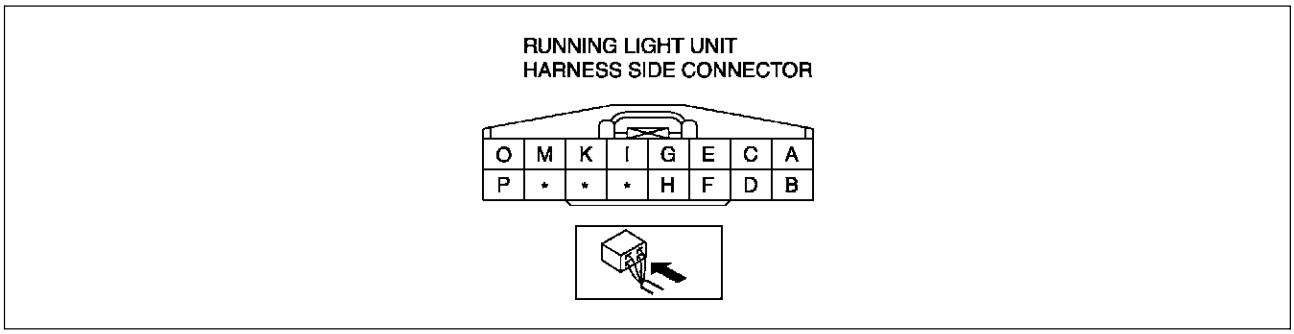

A6E8112W155

Terminal	Signal	Connected to	Test condition		Voltage (V)/ Continuity	Action
A	Illumination light on/off	TNS relay	Ignition switch at ON position		B+	• Inspect ILLUMI 10 A fuse • Inspect TNS relay (See T–24 RELAY INSPECTION) • Inspect related harness
			Ignition switch at LOCK or ACC position	Headlight switch (light) at TNS or headlight position	Below 1.0	
				Headlight switch (light) at OFF position	B+	
B	Illumination light operation	• Instrument cluster • Panel control switch	Headlight switch (light) at TNS or headlight position		B+	—
			Headlight switch (light) at OFF position		Below 1.0	
C	Headlight relay (high-beam) on/off	Headlight relay	Ignition switch at ON position		B+	• Inspect headlight relay (See T–24 RELAY INSPECTION) • Inspect related harness
			Headliht switch (light) at headlight position	Headlight switch (dimmer) at LO position	B+	
				Headlight switch (dimmer) at HI position	B+	
			Flash-to-pass on		B+	
D	Running light unit ground	GND	Under any condition: inspect for continuity to ground		Yes	• Inspect GND
E	IG1	METER IG 15 A fuse	Ignition switch at ON position		B+	• Inspect METER IG 15 A fuse • Inspect related harness
			Ignition switch at LOCK or ACC position		Below 1.0	
F	Front fog light relay on/off	Front fog light relay	Front fog light switch at ON position	Headlight switch (light) at TNS or headlight position	Below 1.0	• Inspect TNS relay (See T–24 RELAY INSPECTION) • Inspect front fog light relay (See T–24 RELAY INSPECTION) • Inspect related harness
				Headlight switch (light) at OFF position	B+	
G	TNS relay on/ off	TNS relay	Ignition switch at ON position		Below 1.0	• Inspect TNS relay (See T–24 RELAY INSPECTION) • Inspect related harness
			Ignition switch at LOCK or ACC position and headlight switch (light) at OFF position		B+	

Terminal	Signal	Connected to	Test condition	Voltage (V)/ Continuity	Action
H	Front fog light on/off	Front and rear fog light switch	Front and rear fog light switch at OFF position: inspect for continuity to ground	No	• Inspect front and rear fog light switch (See T–42 FRONT AND REAR FOG LIGHT SWITCH INSPECTION) • Inspect related harness
			Front and rear fog light switch at ON position: inspect for continuity to ground	Yes	
I	TNS on/off	Headlight switch	Headlight switch (light) at OFF position	No	• Inspect headlight switch (See T–40 LIGHT SWITCH INSPECTION) • Inspect related harness
			Headlight switch (light) at TNS or headlight position	Yes	
K	Headlight relay on/off	Headlight relay	Ignition switch at ON position	Below 1.0	• Inspect headlight relay (See T–24 RELAY INSPECTION) • Inspect related harness
			Ignition switch at LOCK or ACC and headlight switch (light) at OFF position	B+	
M	Flash-to-pass on/off	Headlight switch (dimmer switch)	Headlight switch (light) at OFF or TNS position	No	• Inspect headlight switch (See T–40 LIGHT SWITCH INSPECTION) • Inspect related harness
			Headlight switch (light) at headlight position	Yes	
			Flash-to-pass on	Yes	
O	Headlight high operation	Headlight switch (dimmer switch: HI position)	Ignition switch at ON position	B+	• Inspect headlight switch (See T–40 LIGHT SWITCH INSPECTION) • Inspect related harness
			Headlight switch (light) at headlight position and headlight switch (dimmer) at LO position	B+	
			Headlight switch (light) at headlight position and headlight switch (dimmer) at HI position	Below 1.0	
			Flash-to-pass on	Below 1.0	
P	Headlight (high-beam) on/off	Headlight switch	Headlight switch (dimmer) at LO position: inspect for continuity to ground	No	• Inspect headlight switch (See T–40 LIGHT SWITCH INSPECTION) • Inspect related harness
			Headlight switch (dimmer) at HI position: inspect for continuity to ground	Yes	

T

INTERIOR LIGHTING SYSTEM

FRONT MAP LIGHT REMOVAL/INSTALLATION

A6E811451310W01

1. Disconnect the negative battery cable.
2. Remove in the order indicated in the table.

1	Front map light (See T–48 Front Map Light Removal Note)
2	Connector
3	Socket
4	Map light bulb

3. Install in the reverse order of removal.

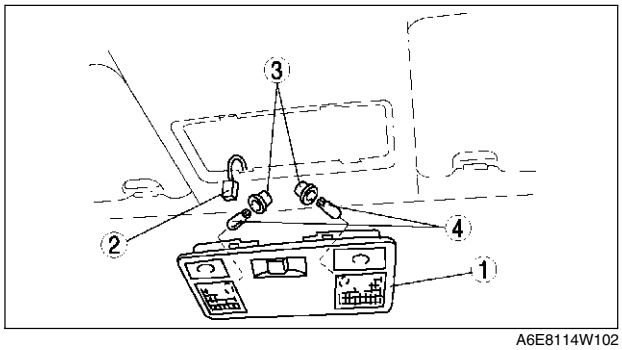

A6E8114W102

Front Map Light Removal Note

1. Insert a tape-wrapped flathead screwdriver into the gap between the headliner and the front map light.
2. Push the hooks to remove the front map light.

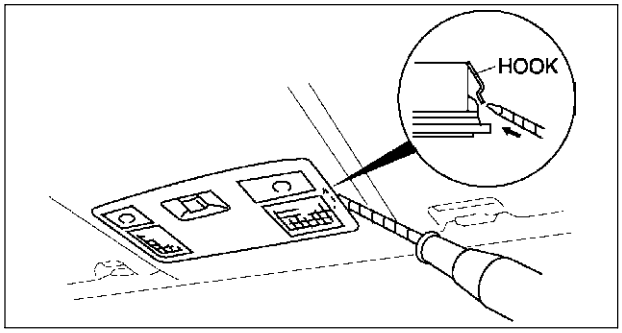

A6E8114W103

FRONT MAP LIGHT INSPECTION

A6E811451310W02

1. Remove the front map light. (See T–48 FRONT MAP LIGHT REMOVAL/INSTALLATION.)
2. Inspect for continuity between the front map light terminals using an ohmmeter.
   - If not as specified, replace the front map light.

: Bulb

Switch position		Terminal		
Front map light switch	Interior light switch	B	C	A
ON	-	○	○	○
OFF	DOOR	○	○	
	OFF			

A6E8114W117

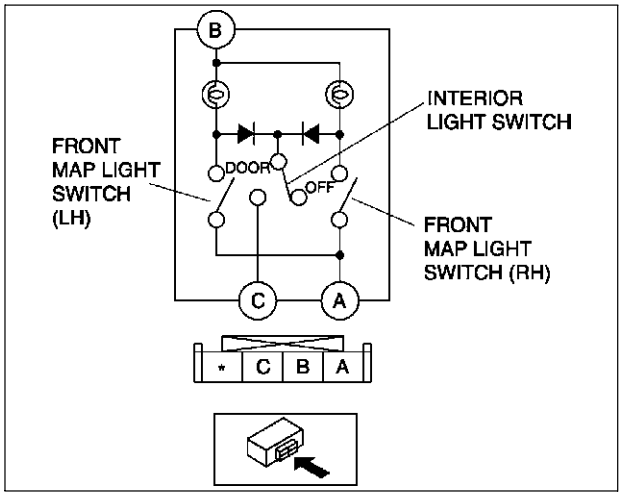

A6E8114W118

REAR MAP LIGHT REMOVAL/INSTALLATION

A6E811451311W01

1. Disconnect the negative battery cable.
2. Remove in the order indicated in the table.

1	Rear map light (See T–49 Rear Map Light Removal Note)
2	Connector
3	Socket
4	Rear map light bulb

3. Install in the reverse order of removal.

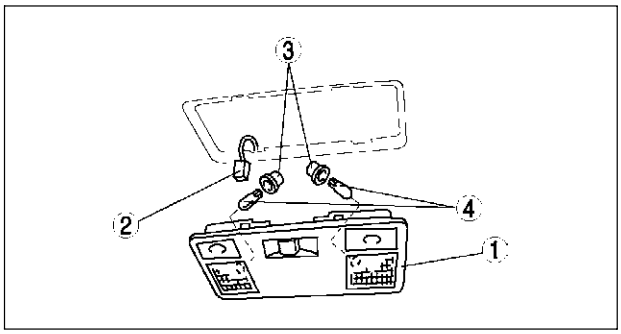

A6E8114W104

Rear Map Light Removal Note

1. Insert a tape-wrapped flathead screwdriver into the gap between the headliner and the rear map light.
2. Push the hooks to remove the rear map light.

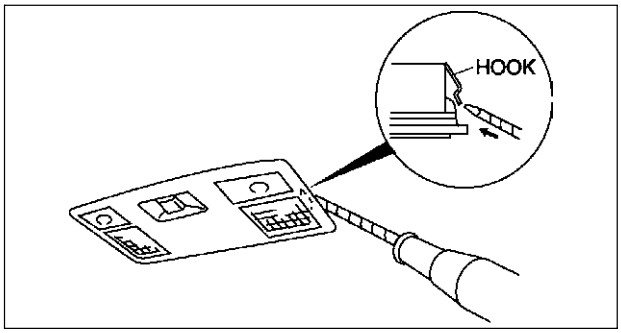

A6E8114W105

T

REAR MAP LIGHT INSPECTION

A6E811451311W02

1. Remove the rear map light. (See T–49 REAR MAP LIGHT REMOVAL/INSTALLATION.)
2. Inspect for continuity between the rear map light terminals using an ohmmeter.
   - If not as specified, replace the rear map light.

: Bulb

Switch position		Terminal		
Rear map light switch	Interior light switch	B	C	A
ON	-	○	○	○
OFF	DOOR	○	○	
	OFF			

A6E8114W127

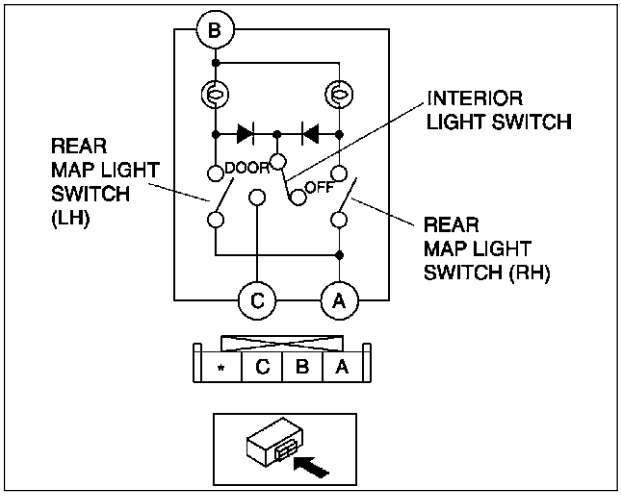

A6E8114W128

CARGO COMPARTMENT LIGHT REMOVAL/INSTALLATION

A6E811451441W01

1. Disconnect the negative battery cable.
2. Remove in the order indicated in the table.

1	Cargo compartment light
2	Connector
3	Lens
4	Cargo compartment light bulb

3. Install in the reverse order of removal.

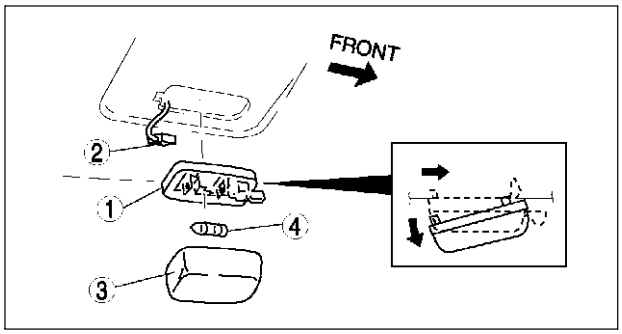

A6E8114W101

CARGO COMPARTMENT LIGHT INSPECTION

A6E811451441W02

1. Remove the cargo compartment light. (See T–50 CARGO COMPARTMENT LIGHT REMOVAL/INSTALLATION)
2. Inspect for continuity between the cargo compartment light terminals using an ohmmeter.
   - If not as specified, replace the cargo compartment light.

: Bulb

Switch position	Terminal A	Terminal B
ON	○	○
OFF		

A6E8114W114

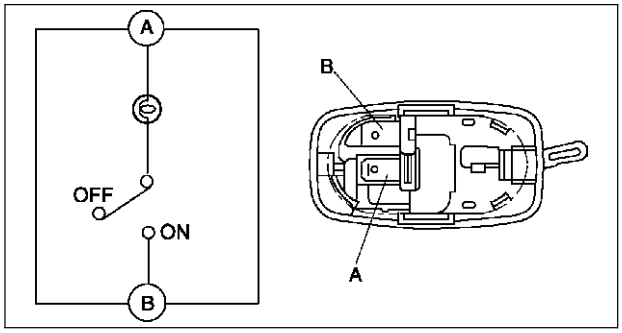

A6E8114W111

CARGO COMPARTMENT LIGHT SWITCH INSPECTION

A6E811451442W01

1. Remove the liftgate lower trim. (See S–95 LIFTGATE LOWER TRIM REMOVAL/INSTALLATION)
2. Disconnect the cargo compartment light switch connector.
3. Inspect for continuity between the cargo compartment light switch terminals using an ohmmeter.
   - If not as specified, replace the liftgate lock.

: Continuity

Switch position	Terminal A	Terminal B
On (liftgate open)	○	○
Off (liftgate closed)		

A6E8114W120

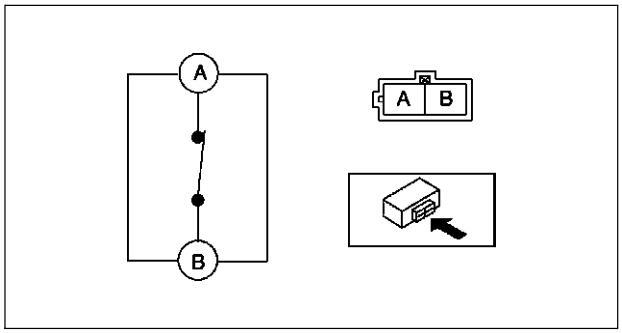

A6E8114W119

TRUNK COMPARTMENT LIGHT BULB REMOVAL/INSTALLATION

A6E811451440W01

1. Disconnect the negative battery cable.
2. Remove in the order indicated in the table.

1	Lens
2	Trunk compartment light bulb

3. Install in the reverse order of removal.

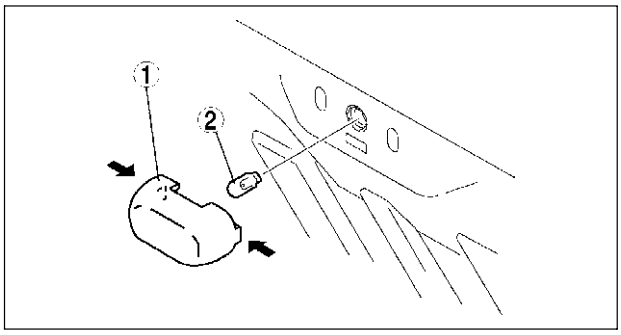

A6E8114W112

TRUNK COMPARTMENT LIGHT SWITCH INSPECTION

A6E811451440W02

1. Remove the trunk lid trim. (See S–93 TRUNK LID TRIM REMOVAL/INSTALLATION)
2. Disconnect the trunk compartment light switch connector.
3. Inspect for continuity between the trunk compartment light switch terminals using an ohmmeter.
   - If not as specified, replace the trunk lock.

○—○ : Continuity

Switch position	Terminal A	Terminal B
On (trunk open)	○	○
Off (trunk closed)		

A6E8114W121

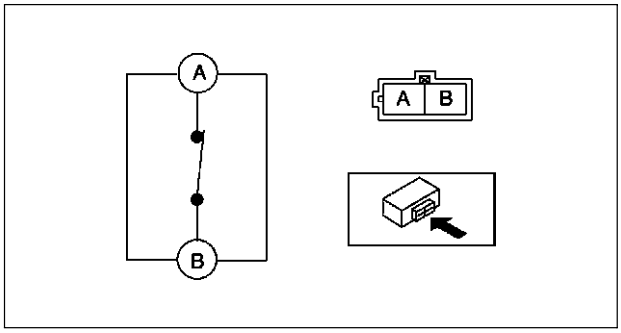

A6E8114W119

COURTESY LIGHT BULB REMOVAL/INSTALLATION

A6E811469971W01

1. Disconnect the negative battery cable.
2. Remove in the order indicated in the table.

1	Lens
2	Courtesy light bulb

3. Install in the reverse order of removal.

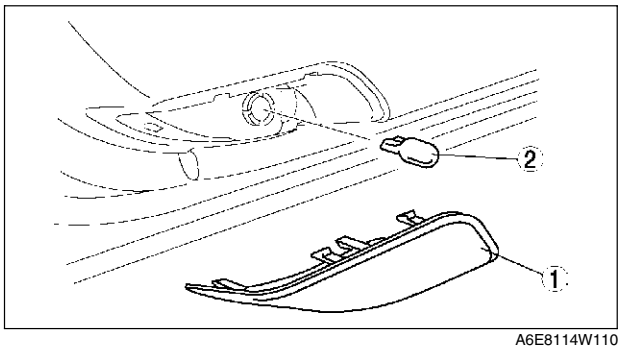

A6E8114W110

T

DOOR SWITCH REMOVAL/INSTALLATION

A6E811466540W01

Front

1. Disconnect the negative battery cable.
2. Remove in the order indicated in the table.

1	Screw
2	Door switch
3	Connector

3. Install in the reverse order of removal.

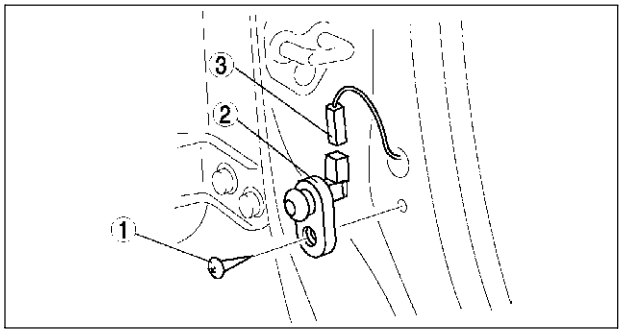

A6E8114W108

Rear

1. Disconnect the negative battery cable.
2. Remove in the order indicated in the table.

1	Screw
2	Door switch
3	Connector

3. Install in the reverse order of removal.

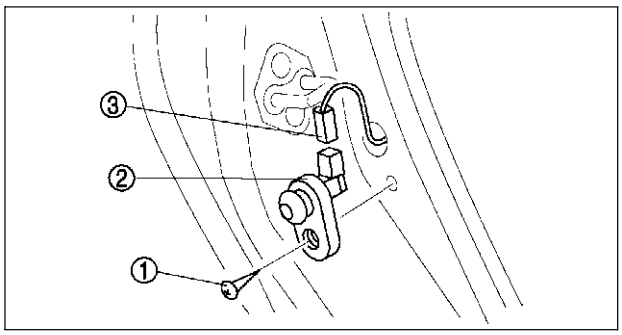

A6E8114W109

DOOR SWITCH INSPECTION

A6E811466540W02

1. Remove the door switch. (See T–52 DOOR SWITCH REMOVAL/INSTALLATION)
2. Inspect for continuity between the door switch terminal and a body ground using an ohmmeter.
   - If not as specified, replace the door switch.

○—○ : Continuity

Switch position	Terminal	
	A	Body GND
Pressed		
Released	○	○

A6E8114W122

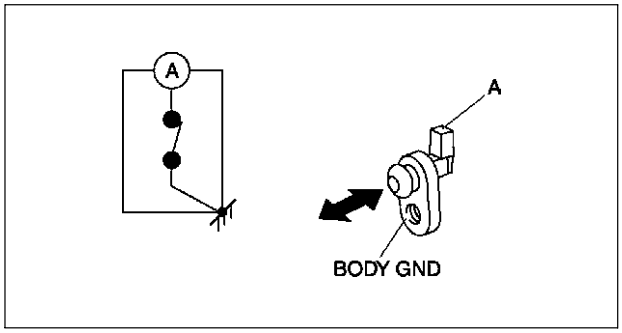

A6E8114W115

ASHTRAY ILLUMINATION BULB REMOVAL/INSTALLATION

A6E811455431W01

1. Disconnect the negative battery cable.
2. Remove the boot panel.
3. Remove in the order indicated in the table.

1	Socket
2	Ashtray illumination bulb

4. Install in the reverse order of removal.

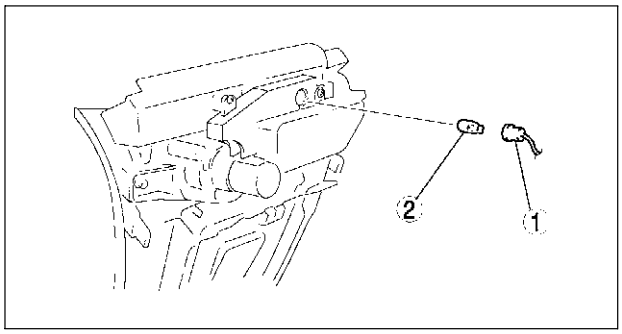

A6E8114W106

IGNITION KEY ILLUMINATION BULB REMOVAL/INSTALLATION

A6E811460231W01

1. Disconnect the negative battery cable.
2. Remove the column cover. (See S–84 COLUMN COVER REMOVAL/INSTALLATION)
3. Remove the ignition key illumination bulb.
4. Install in the reverse order of removal.

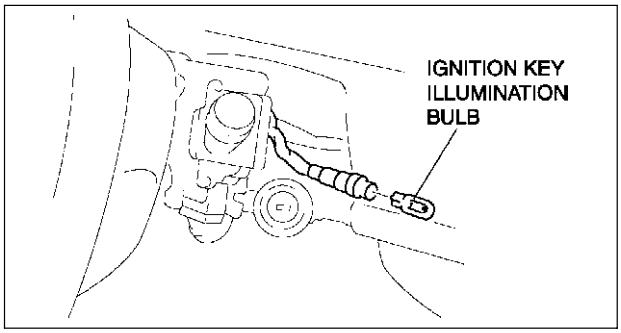

A6E8114W129

GLOVE COMPARTMENT LIGHT BULB REMOVAL/INSTALLATION

A6E811451445W01

1. Disconnect the negative battery cable.
2. Remove in the order indicated in the table.

1	Socket
2	Glove compartment light bulb

3. Install in the reverse order of removal.

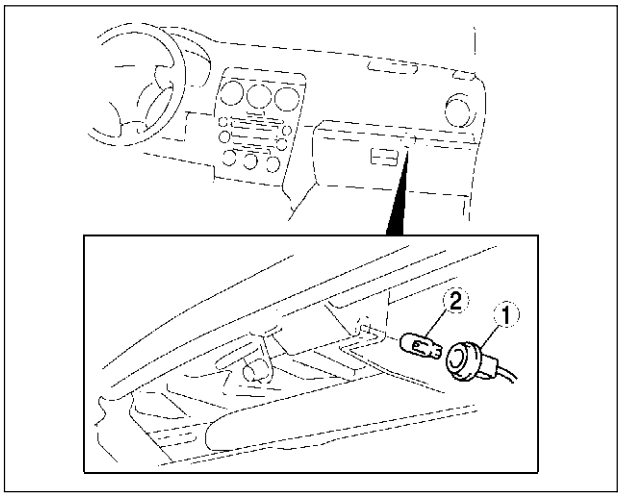

A6E8114W113

PANEL LIGHT CONTROL SWITCH REMOVAL/INSTALLATION

A6E811466600W01

1. Disconnect the negative battery cable.
2. Remove in the order indicated in the table.

1	Panel light control switch (See T–53 Panel Light Control Switch Removal Note)
2	Connector

3. Install in the reverse order of removal.

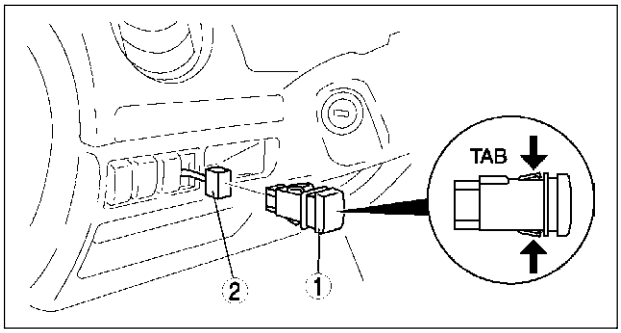

A6E8114W116

Panel Light Control Switch Removal Note

1. Insert your hand from the lower side of the dashboard and squeeze the tabs of the panel light control switch.
2. Pull the panel light control switch forward to remove it.

PANEL LIGHT CONTROL SWITCH INSPECTION

A6E811466600W02

1. Connect the connector to the panel light control switch.
2. Connect the negative battery cable.
3. Measure the voltage at the panel light control switch using voltmeter.
   - When inspecting terminal B for continuity, disconnect the panel light control switch connector.
4. If the value are not as specified in the Terminal Voltage List (Reference), inspect the parts under “Action” and related wiring harnesses.
5. If the system does not work properly even though the parts or related wiring harnesses do not have any malfunction, replace the panel light control switch.

Terminal Voltage Table (Reference)

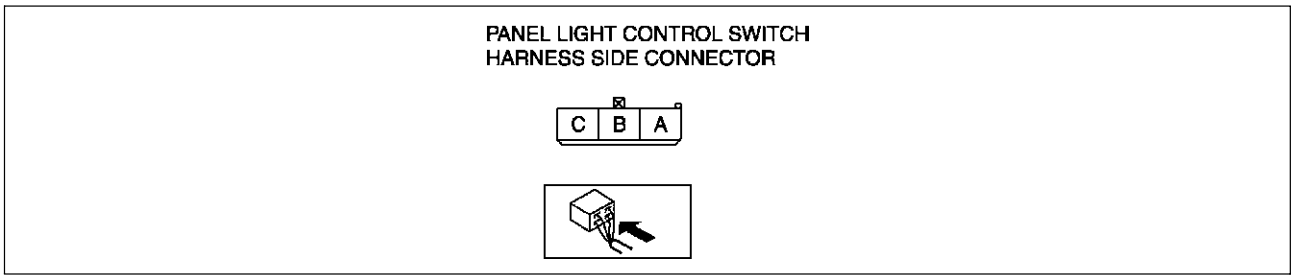

A6E8114W123

Terminal	Signal	Connected to	Test condition	Voltage (V)/ Continuity	Action
A	TNS (Without running light system)	TNS relay	Headlight switch at TNS or headlight position	B+	• Inspect TNS relay (See T–24 RELAY INSPECTION) • Inspect ILLUMI 10A fuse • Inspect related harness
			Other	0	
	Running light (With running light system)	Running light unit	Headlight switch at TNS or headlight position	B+	• Inspect running light unit (See T–46 RUNNING LIGHT UNIT INSPECTION) • Inspect related harness
			Other	0	
C	Illumination	Each illumination	Inspect using an oscilloscope (See T–55 Terminal C inspection)	—	• Inspect each illumination • Inspect related harness
B	Ground	GND	Under any condition: inspect for continuity to ground	Yes	• Inspect GND • Inspect related harness

Terminal C inspection

1. Measure the wave pattern of the terminal C on the panel light control switch using an oscilloscope.
2. Set the headlight switch to either the TNS or headlight position.
3. Set the panel light control switch to the brightest position.

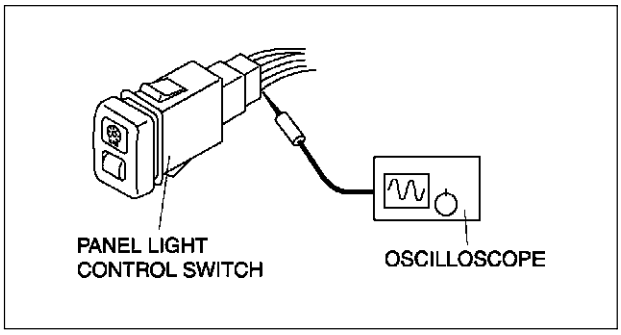

A6E8114W124

4. Verify that the pattern on the screen is as shown in the figure.



A6E8114W125

5. Verify that the pattern on the screen matches the pattern shown in the figure as the panel light control switch is gradually turned to the darkest position.

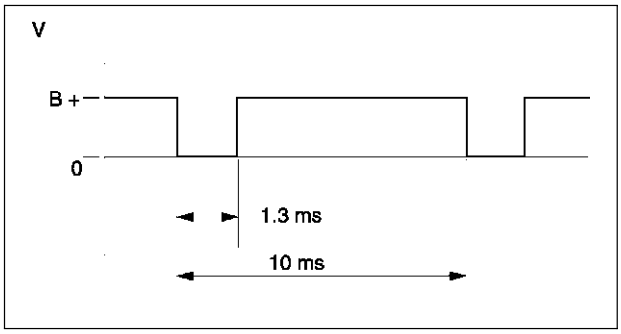

A6E8114W126

T

WIPER AND WASHER

WINDSHIELD WIPER MOTOR REMOVAL/INSTALLATION

A6E811667340W01

1. Disconnect the negative battery cable.
2. Remove the windshield wiper arm and blade. (See T–57 WINDSHIELD WIPER ARM AND BLADE REMOVAL/INSTALLATION.)
3. Remove the cowl grille. (See S–50 COWL GRILLE REMOVAL/INSTALLATION.)
4. Remove in the order indicated in the table.

1	Connector
2	Bolt
3	Windshield wiper motor

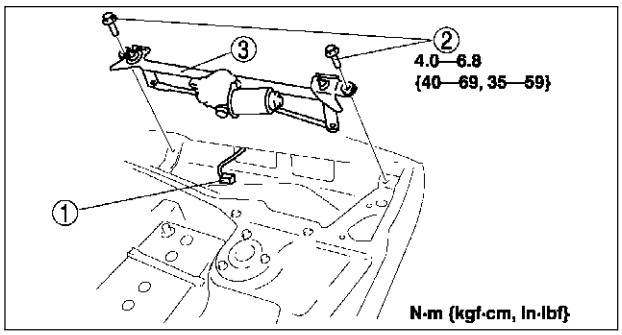

A6E8116W102

5. Install in the reverse order of removal.
6. Adjust the windshield wiper arm and blade. (See T–58 WINDSHIELD WIPER ARM AND BLADE ADJUSTMENT.)

WINDSHIELD WIPER MOTOR DISASSEMBLY/ASSEMBLY

A6E811667340W02

1. Disassemble in the order indicated in the table.

1	Windshield wiper link (See T–56 Windshield Wiper Link Removal Note)
2	Bolt
3	Windshield wiper motor

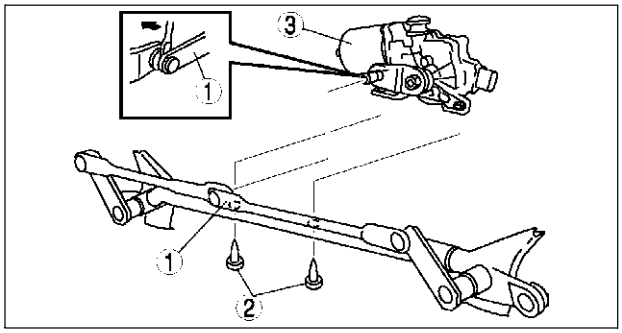

A6E8116W140

2. Assemble in the reverse order of disassembly.

Windshield Wiper Link Removal Note

1. Pry off the connection between the windshield wiper motor and windshield wiper link.

WINDSHIELD WIPER MOTOR INSPECTION

A6E811667340W03

L.H.D.

1. Disconnect the windshield wiper motor connector.
2. Connect battery positive voltage to terminal E or D and ground to terminal B, and inspect the operation of the windshield wiper motor as indicated below.

Terminal	Operation
E	High
D	Low

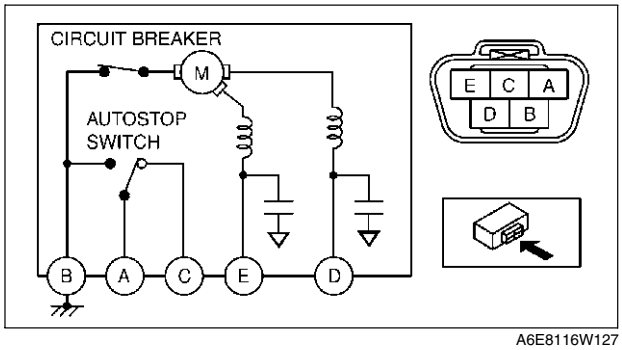

A6E8116W127

3. Disconnect battery positive voltage from terminal E of the motor while the wipers are operating.
4. Verify that the wipers do not stop in the park position.
5. Short between the motor terminals A and D and connect battery positive voltage to the motor terminal C.
6. Verify that the wipers operate at low speed again, then stop in the park position.
   - If not as specified, replace the windshield wiper motor.

R.H.D.

1. Disconnect the windshield wiper motor connector.
2. Connect battery positive voltage to terminal B or A and ground to terminal D, and inspect the operation of the windshield wiper motor as indicated below.

Terminal	Operation
B	High
A	Low

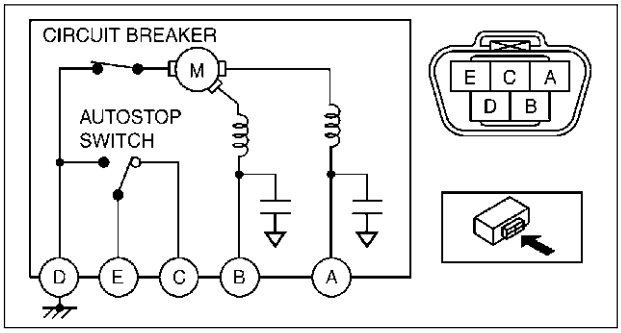

A6E8116W128

3. Disconnect battery positive voltage from terminal B of the motor while the wipers are operating.
4. Verify that the wipers do not stop in the park position.
5. Short between the motor terminals E and A and connect battery positive voltage to the motor terminal C.
6. Verify that the wipers operate at low speed again, then stop in the park position.
   - If not as specified, replace the windshield wiper motor.

WINDSHIELD WIPER ARM AND BLADE REMOVAL/INSTALLATION

A6E811667320W01

1. Remove in the order indicated in the table.

1	Cap
2	Nut
3	Windshield wiper arm (See T–57 Windshield Wiper Arm Installation Note)
4	Windshield wiper blade
5	Rubber brush

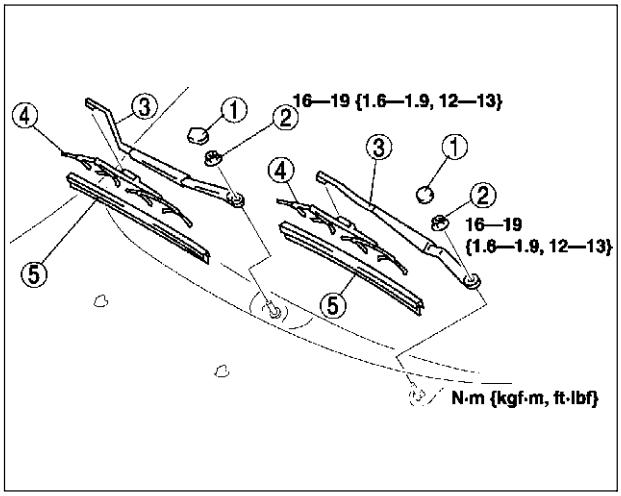

A6E8116W111

2. Install in the reverse order of removal.
3. Adjust the windshield wiper arm and blade. (See T–58 WINDSHIELD WIPER ARM AND BLADE ADJUSTMENT.)

Windshield Wiper Arm Installation Note

1. Clean the windshield wiper arm connector shafts using a wire brush before installing the windshield wiper arms.

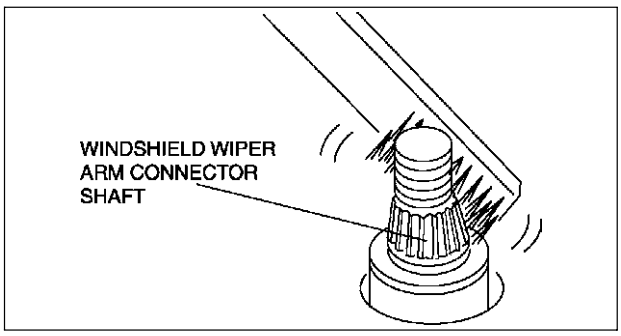

A6E8116W103

T

WINDSHIELD WIPER ARM AND BLADE ADJUSTMENT

A6E811667320W02

1. Operate the windshield wiper motor to set the wipers in the park position.
2. Set the windshield wiper arms height as shown.

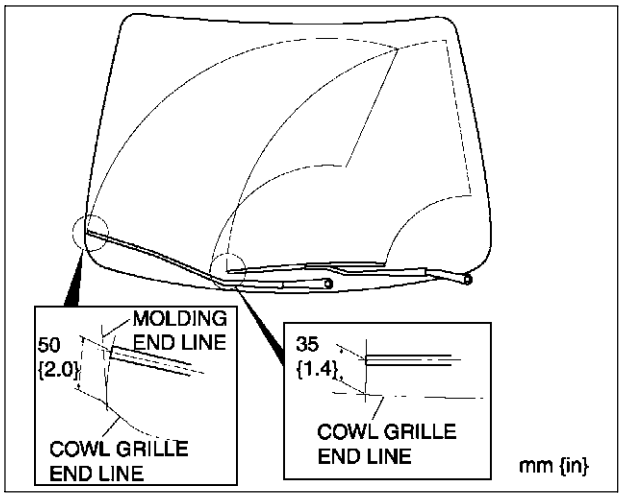

A6E8116W107

WASHER TANK REMOVAL/INSTALLATION

A6E811667481W01

1. Disconnect the negative battery cable.
2. Remove in the order indicated in the table.

1	Bolt
2	Connector
3	Washer hose
4	Clip
5	Headlight cleaner hose
6	Washer tank

3. Install in the reverse order of removal.

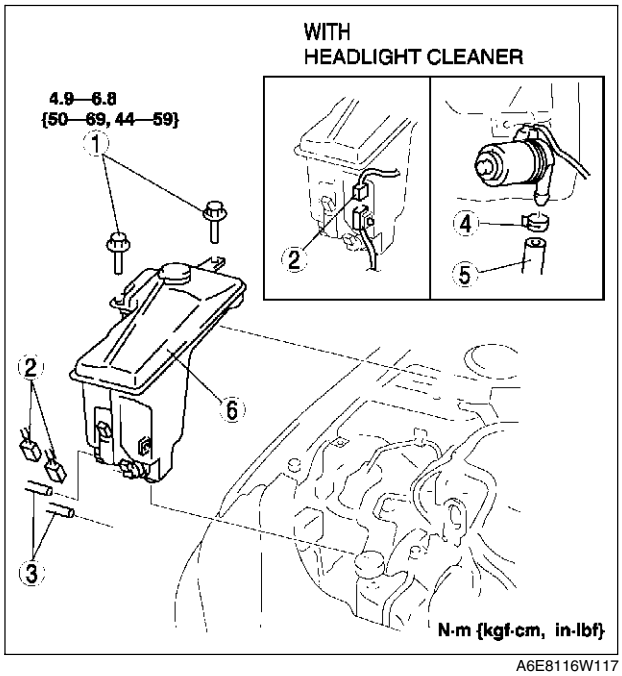

A6E8116W117

WINDSHIELD WASHER MOTOR REMOVAL/INSTALLATION

A6E811676670W01

1. Disconnect the negative battery cable.
2. Remove the washer tank. (See T–58 WASHER TANK REMOVAL/INSTALLATION)
3. Remove in the order indicated in the table.

1	Windshield washer motor
2	Grommet

4. Install in the reverse order of removal.

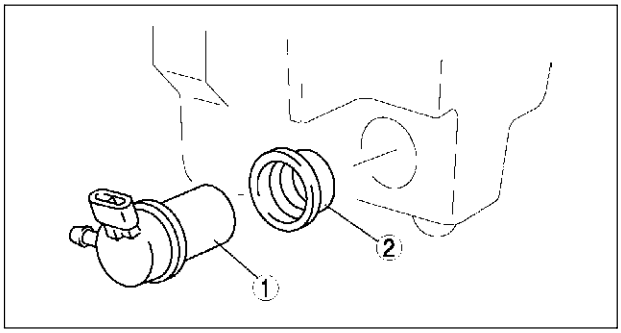

A6E8116W123

WINDSHIELD WASHER MOTOR INSPECTION

A6E811676670W02

1. Disconnect the negative battery cable.
2. Remove the washer tank. (See T–58 WASHER TANK REMOVAL/INSTALLATION)
3. Connect battery positive voltage to the motor terminal B and ground to the motor terminal A.
4. Verify that the windshield washer motor operates.
   - If the motor does not operate, replace the windshield washer motor.

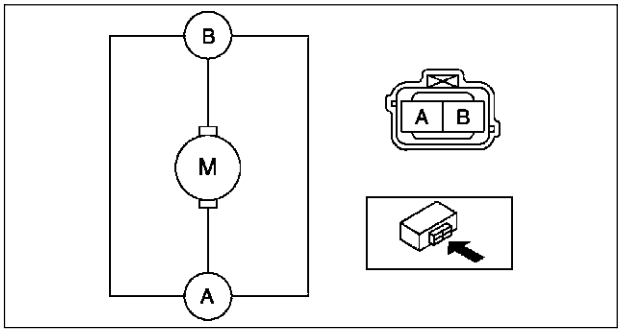

A6E8116W129

WASHER FLUID-LEVEL SENSOR REMOVAL/INSTALLATION

A6E811676670W03

1. Disconnect the negative battery cable.
2. Remove the washer tank. (See T–58 WASHER TANK REMOVAL/INSTALLATION)
3. Remove the headlight cleaner motor. (See T–69 HEADLIGHT CLEANER MOTOR REMOVAL/INSTALLATION)
4. Remove in the order indicated in the table.

1	Connector
2	Washer fluid-level sensor
3	Grommet

5. Install in the reverse order of removal.

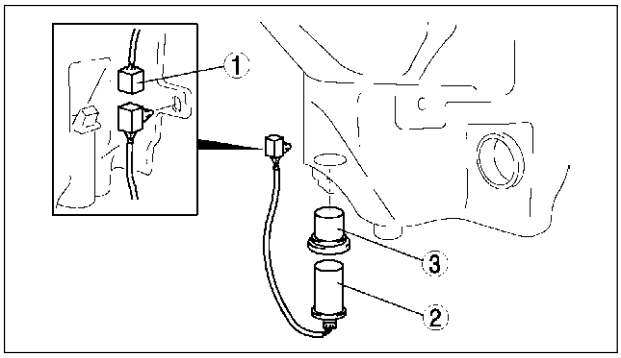

A6E8116W114

T

WASHER FLUID-LEVEL SENSOR INSPECTION

A6E811676670W04

1. Disconnect the negative battery cable.
2. Remove the washer tank. (See T–58 WASHER TANK REMOVAL/INSTALLATION)
3. Insoect for continuity between the washer fluid-level sensor terminals using an ohmmeter.
4. Verify that the windshield washer motor operates.
   - If not as specified, replace the washer fluid-level sensor.

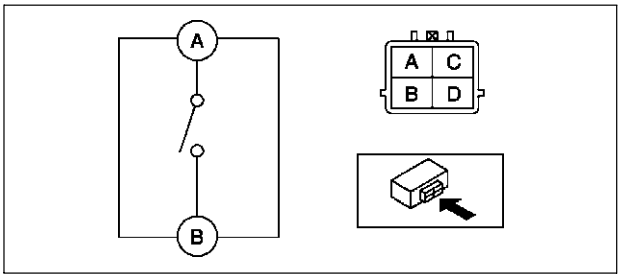

A6E8116W130

○—○ : Continuity

Fluid level	Terminal A	Terminal B
Above Low		
Below Low	○	○

A6E8116W144

WINDSHIELD WASHER NOZZLE REMOVAL/INSTALLATION

A6E811667510W01

1. Remove the bonnet insulator.
2. Remove the windshield washer hose from the windshield washer nozzle.
3. Compress the hooks of the windshield washer nozzle.
4. Pull the windshield washer nozzle out to remove it.
5. Install in the reverse order of removal.

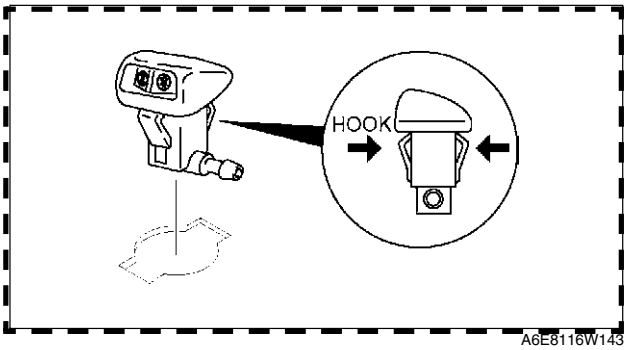

A6E8116W143

WINDSHIELD WASHER NOZZLE CLEANING

A6E811667510W03

1. Clean the washer nozzle by inserting and moving a needle or an equivalent tool back and forth.
   - If the nozzle becomes clogged again after cleaning, remove the hose from washer nozzle. Make sure there is enough washer fluid. Then turn the washer switch on and flush the inside of the hose.

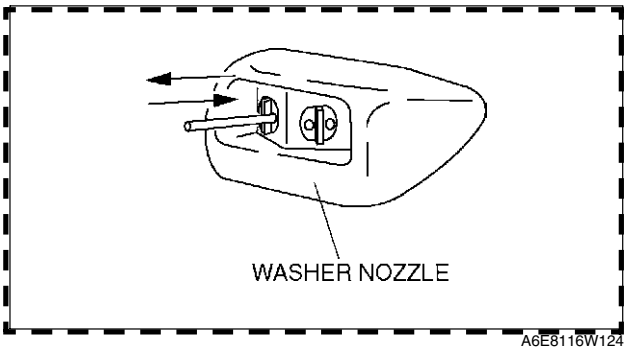

A6E8116W124

WINDSHIELD WASHER HOSE REMOVAL/INSTALLATION

A6E811650601W01

1. Remove the bonnet insulator.
2. Partially peel off the right side mud guard.
3. Remove in the order indicated in the table.

1	Clip
2	Joint pipe
3	Windshield washer hose

4. Install in the reverse order of removal.

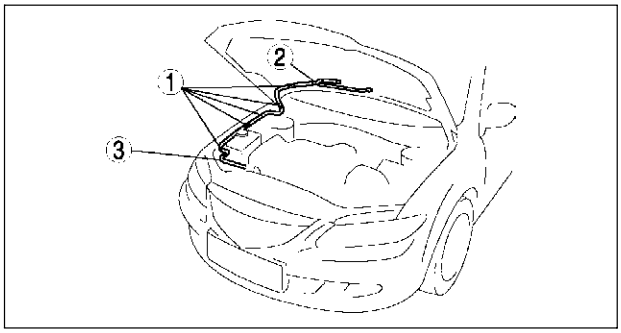

A6E8116W126

REAR WASHER MOTOR REMOVAL/INSTALLATION

A6E811676672W01

1. Disconnect the negative battery cable.
2. Remove the washer tank. (See T–58 WASHER TANK REMOVAL/INSTALLATION)
3. Remove in the order indicated in the table.

1	Rear washer motor
2	Grommet

4. Install in the reverse order of removal.

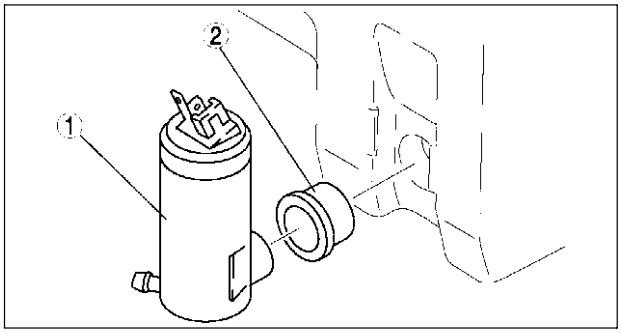

A6E8116W104

REAR WASHER MOTOR INSPECTION

A6E811676672W02

1. Disconnect the negative battery cable.
2. Remove the washer tank. (See T–58 WASHER TANK REMOVAL/INSTALLATION)
3. Connect battery positive voltage to the terminal B and ground to the terminal A of the motor.
4. Verify that the rear washer motor operates.
   - If the motor does not operate, replace the rear washer motor.

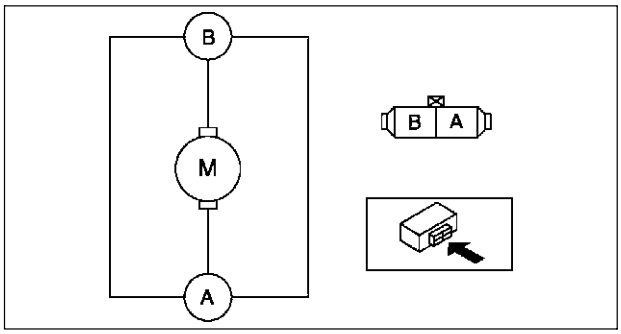

A6E8116W131

REAR WIPER MOTOR REMOVAL/INSTALLATION

A6E811667450W01

1. Disconnect the negative battery cable.
2. Remove the rear wiper arm and blade. (See T–63 REAR WIPER ARM AND BLADE REMOVAL/INSTALLATION.)
3. Remove the liftgate lower trim. (See S–95 LIFTGATE LOWER TRIM REMOVAL/INSTALLATION)
4. Remove in the order indicated in the table.

1	Connector
2	Outer bushing
3	Bolt
4	Rear wiper motor

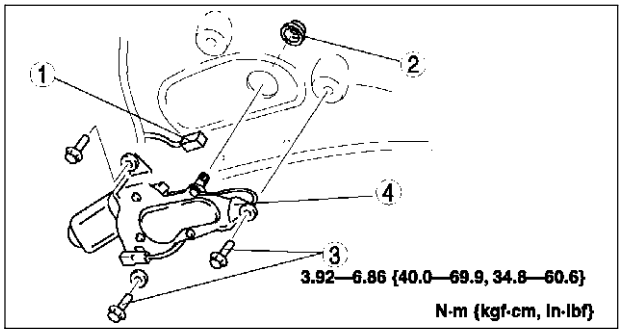

A6E8116W110

5. Install in the reverse order of removal.
6. Adjust the rear wiper arm and blade. (See T–64 REAR WIPER ARM AND BLADE ADJUSTMENT.)

REAR WIPER MOTOR INSPECTION

A6E811667450W02

1. Disconnect the negative battery cable.
2. Remove the liftgate lower trim. (See S–95 LIFTGATE LOWER TRIM REMOVAL/INSTALLATION)
3. Disconnect the rear wiper motor connector.
4. Connect battery positive voltage to the rear wiper motor terminal A and the ground to a bare metal part of the vehicle and the rear wiper motor terminal B.
5. Verify that the rear wiper motor operates.

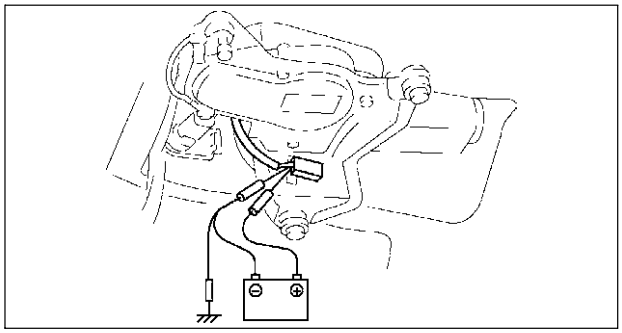

A6E8116W119

6. Disconnect the ground to the terminal B while the rear wiper is operating.

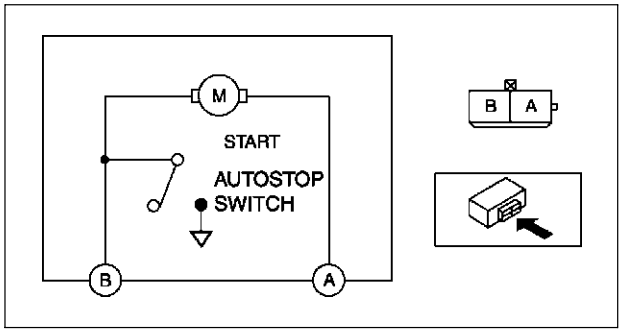

A6E8116W132

7. Verify that the rear wiper stops in the park position.
   - If not as specified, replace the rear wiper motor.

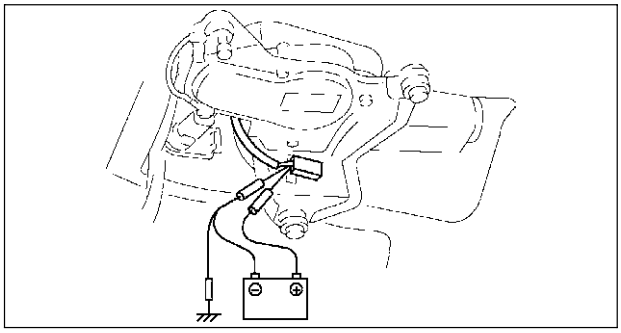

A6E8116W119

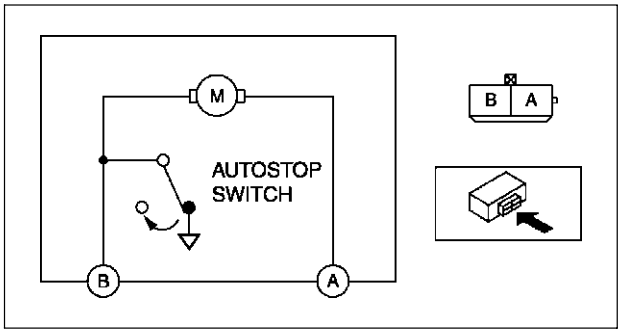

A6E8116W133

REAR WIPER ARM AND BLADE REMOVAL/INSTALLATION

A6E811667420W01

1. Remove in the order indicated in the table.

1	Cap
2	Nut
3	Rear wiper arm (See T–63 Rear Wiper Arm Installation Note)
4	Rear wiper blade
5	Rubber brush

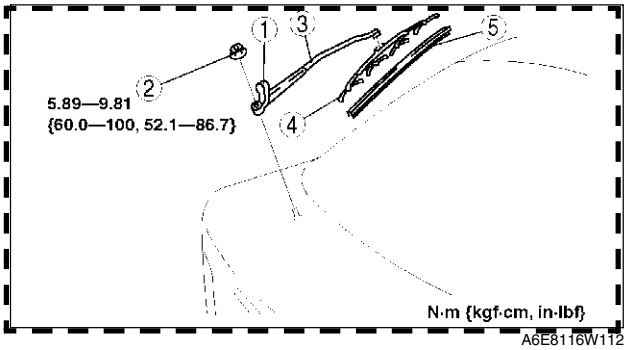

A6E8116W112

2. Install in the reverse order of removal.
3. Adjust the rear wiper arm and blade. (See T–64 REAR WIPER ARM AND BLADE ADJUSTMENT)

Rear Wiper Arm Installation Note

1. Clean the rear wiper arm connector shaft using a wire brush before installing the rear wiper arm.

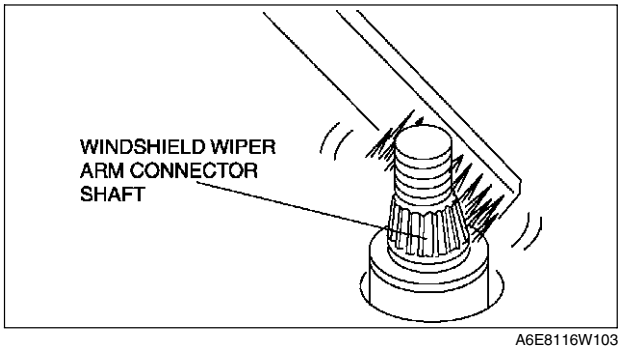

A6E8116W103

T

REAR WIPER ARM AND BLADE ADJUSTMENT

A6E811667420W02

1. Operate the rear wiper motor to set the wiper in the park position.
2. Set the rear wiper arm onto the ceramics end line.

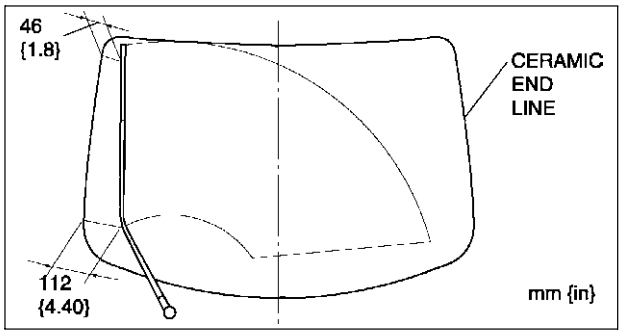

A6E8116W109

REAR WASHER NOZZLE REMOVAL/INSTALLATION

A6E811667511W01

1. Disconnect the negative battery cable.
2. Remove the liftgate upper trim. (See S–94 LIFTGATE UPPER TRIM REMOVAL/INSTALLATION)
3. Remove the rear washer hose from the rear washer nozzle.
4. Compress the tabs of the rear washer nozzle.
5. Pull the rear washer nozzle out to remove it.
6. Install in the reverse order of removal.
7. Adjust the rear washer nozzle. (See T–64 REAR WASHER NOZZLE ADJUSTMENT.)

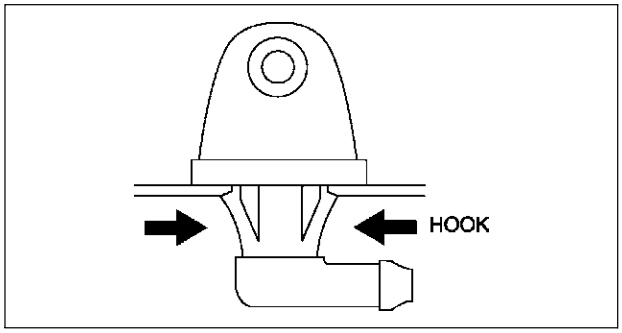

A6E8116W105

REAR WASHER NOZZLE ADJUSTMENT

A6E811667511W02

1. Insert a needle or an equivalent tool into the spray hole of the rear washer nozzle and adjust the nozzle direction as shown.

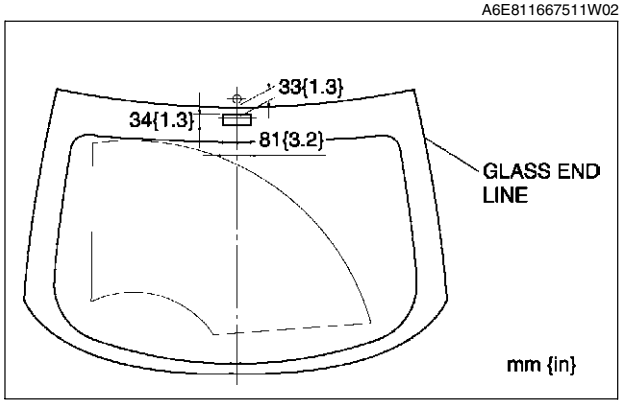

A6E8116W108

REAR WASHER NOZZLE CLEANING

A6E811667511W03

1. Clean the rear washer nozzle. (See T–60 WINDSHIELD WASHER NOZZLE CLEANING.)

REAR WASHER HOSE REMOVAL/INSTALLATION

A6E811667470W01

1. Disconnect the negative battery cable.
2. Remove the washer tank. (See T–58 WASHER TANK REMOVAL/INSTALLATION)
3. Partially peel off the right side mud guard.
4. Remove rear washer hose No.1 from the clips.
5. Remove rear washer hose No.1 and joint pipe A.
6. Remove the A-pillar trim. (See S–87 A-PILLAR TRIM REMOVAL)

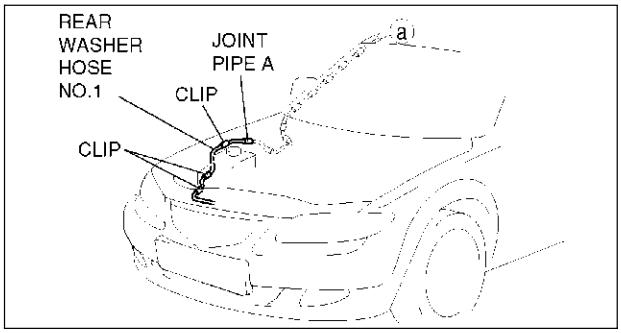

A6E8116W148

7. Remove rear washer hose No.2 from clip A.
8. Remove clips B from the body.
9. Remove rear washer hose No.2 and joint pipes B.
10. Remove the C-pillar trim. (See S–89 C-PILLAR TRIM REMOVAL/INSTALLATION)
11. Remove the liftgate upper trim. (See S–94 LIFTGATE UPPER TRIM REMOVAL/INSTALLATION)

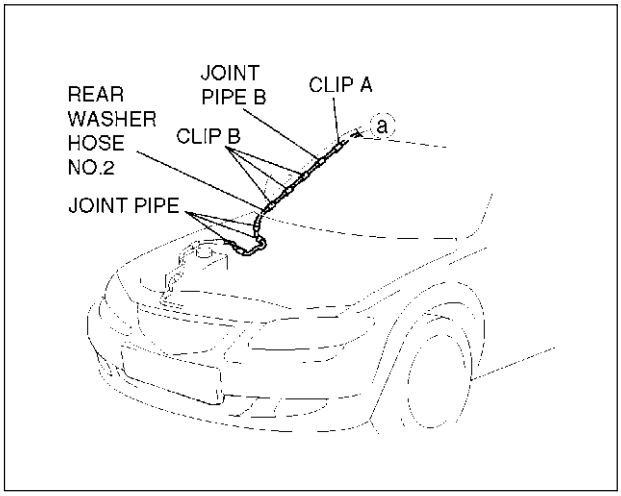

A6E8116W149

12. Remove rear washer hose No.3 from clip C.
13. Remove clips D from the body.
14. Remove rear washer hose No.3 and joint pipe C.
15. Remove the headliner. (See S–96 HEADLINER REMOVAL/INSTALLATION)

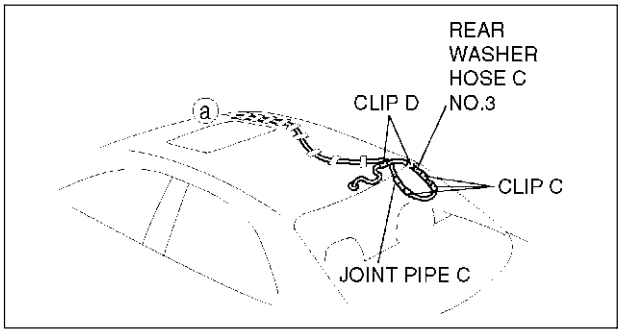

A6E8116W201

16. Remove the tape from rear washer hose No.4.
17. Install in the reverse order of removal.

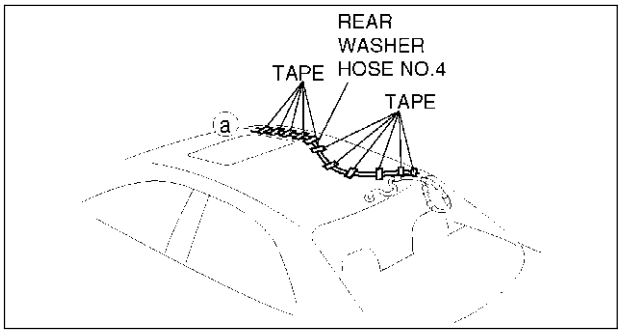

A6E8116W202

T

INTERMITTENT REAR WIPER RELAY REMOVAL/INSTALLATION

A6E811666810W01

5HB

1. Disconnect the negative battery cable.
2. Remove the trunk side trim. (See S–92 TRUNK SIDE TRIM REMOVAL/INSTALLATION)
3. Remove in the order indicated in the table.

1	Connector
2	Bolt
3	Interittent rear wiper relay

4. Install in the reverse order of removal.

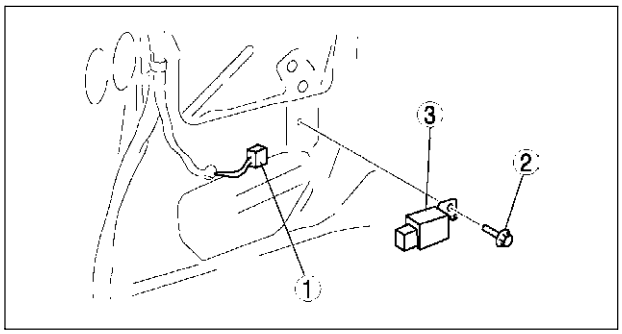

A6E8116W101

INTERMITTENT REAR WIPER RELAY INSPECTION

A6E811666810W02

1. Connect the connector to the intermittent rear wiper relay.
2. Connect the negative battery cable.
3. Measure the voltage at the intermittent rear wiper relay using voltmeter.
   - When inspecting terminal D for continuity, disconnect the intermittent rear wiper relay connector.
4. If the value are not as specified in the Terminal Voltage List (Reference), inspect the parts under “Action” and related wiring harnesses.
5. If the system does not work properly even though the parts or related wiring harnesses do not have any malfunction, replace the intermittent rear wiper relay.

Terminal Voltage Table (Reference)

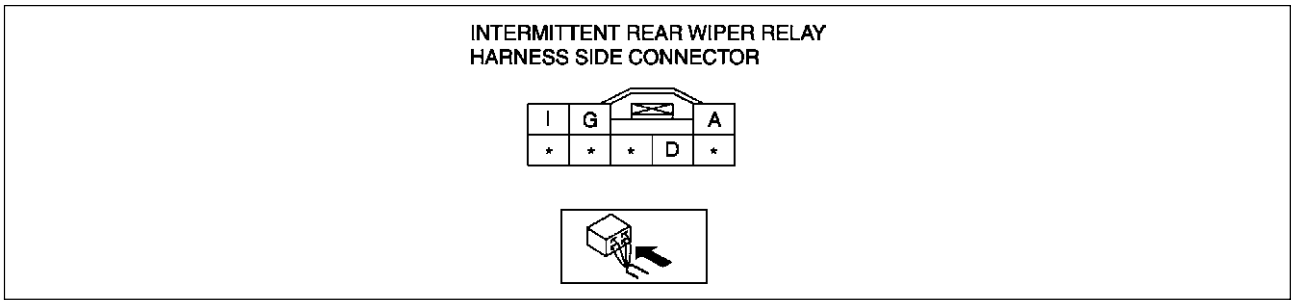

A6E8116W134

Terminal	Signal	Connected to	Test condition	Voltage (V)/ Continuity	Action
A	Autostop	Rear wiper motor	Rear wiper is operating (INT position or ON position)	Alternates 0 and B+	• Inspect R. WIP 10 A fuse • Inspect wiper and washer switch (See T–68 WIPER AND WASHER SWITCH INSPECTION) • Inspect rear wiper motor (See T–62 REAR WIPER MOTOR INSPECTION) • Inspect related harness
			Other	B+	
D	GND	GND	Under any condition: inspect for continuity to ground	Yes	• Inspect GND • Inspect related harness

Terminal	Signal	Connected to	Test condition		Voltage (V)/ Continuity	Action
G	Rear wiper switch INT	Rear wiper switch	Ignition switch at ON position	Rear wiper switch at INT position	0	• Inspect R. WIP 10 A fuse • Inspect wiper and washer switch (See T–68 WIPER AND WASHER SWITCH INSPECTION) • Inspect related harness
				• Rear wiper switch at OFF position • Rear wiper switch at ON position	B+	
I	IG 2	R. WIP 10 A fuse	Ignition switch at ON position		B+	• Inspect R. WIP 10 A fuse • Inspect related harness
			Other		0	

WIPER AND WASHER SWITCH REMOVAL/INSTALLATION

A6E811666122W01

1. Disconnect the negative battery cable.
2. Remove the column cover. (See S–84 COLUMN COVER REMOVAL/INSTALLATION)
3. Remove in the order indicated in the table.

1	Connector
2	Screw
3	Wiper and washer switch

4. Install in the reverse order of removal.

WIPER AND WASHER SWITCH LH SIDE

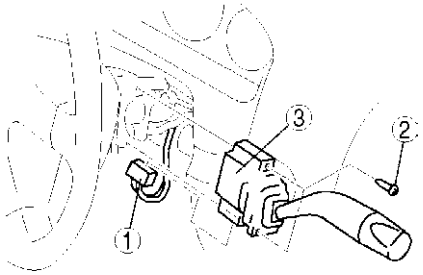

A6E8116W203

WIPER AND WASHER SWITCH RH SIDE

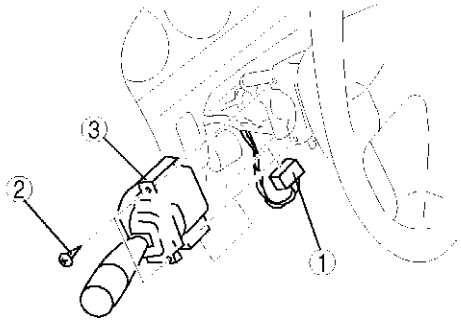

A6E8116W204

T

WIPER AND WASHER SWITCH INSPECTION

A6E811666122W02

Windshield Wiper And Washer Switch

Without vehicle-speed sensing type wipers

1. Remove the wiper and washer switch. (See T–67 WIPER AND WASHER SWITCH REMOVAL/INSTALLATION)
2. Inspect for continuity between the wiper and washer switch terminals using an ohmmeter.
   - If not as specified, replace the wiper and washer switch.

○—○ : Continuity

Switch position		One-touch	Terminal				
			A (O)	C (M)	E (K)	K (E)	O (A)
Wiper switch	OFF	OFF		○		○	
		ON			○	○	
	INT			○		○	
	1				○	○	
	2				○		○
Washer switch	ON		○		○		

( ): Wiper and washer switch RH side

A6E8116W146

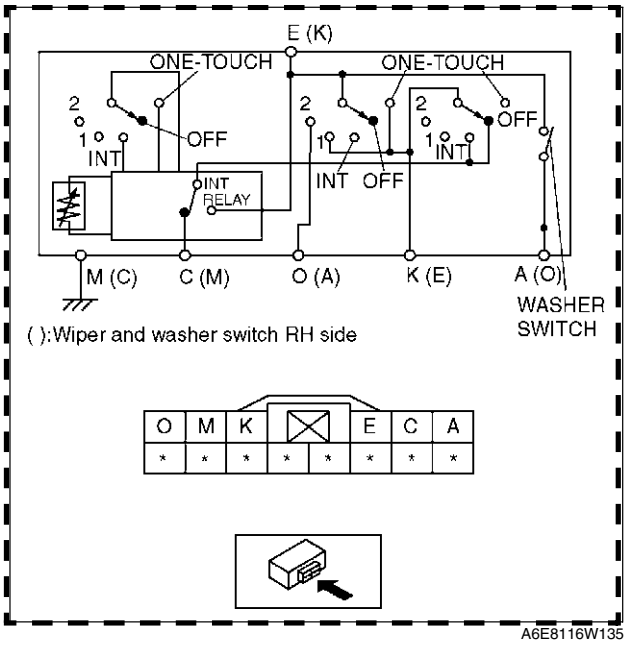

A6E8116W135

With vehicle-speed sensing type wipers

1. Remove the wiper and washer switch. (See T–67 WIPER AND WASHER SWITCH REMOVAL/INSTALLATION)
2. Inspect for continuity between the wiper and washer switch terminals using an ohmmeter.
   - If not as specified, replace the wiper and washer switch.

○—○ : Continuity

Switch position		One-touch	Terminal				
			A (O)	C (M)	E (K)	K (E)	O (A)
Wiper switch	OFF	OFF		○		○	
		ON			○	○	
	INT			○		○	
	1				○	○	
	2				○		○
Washer switch	ON		○		○		

( ): Wiper and washer switch RH side

A6E8116W146

3. Connect the negative battery cable.

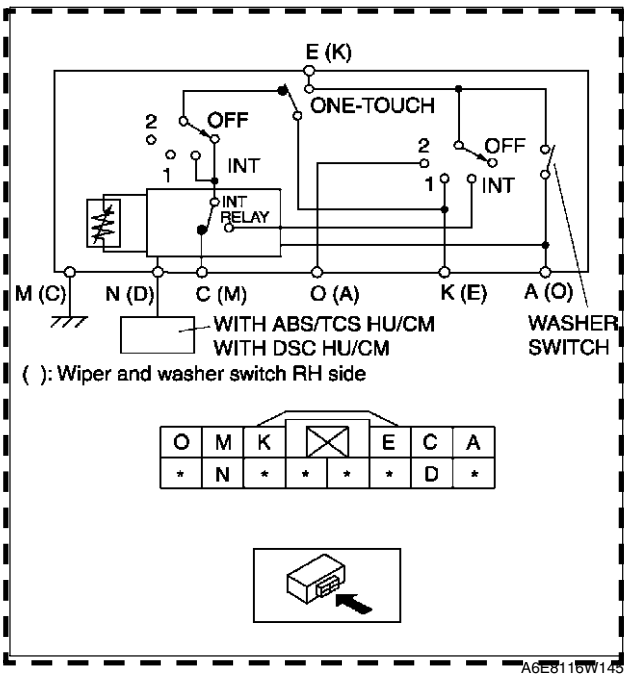

A6E8116W145

4. Inspect whether the vehicle speed signal to the wiper and washer switch terminal N (D) is input correctly using an oscilloscope.
   - Connect the oscilloscope probes to the wiper and washer switch terminal N (D) (+) and terminal M (C) (-).
   - Set oscilloscope to 1V/DIV (Y), 5ms/DIV (X).
   - Verify that the wave pattern below is displayed while the vehicle is moving at 30 km/h {19 mph}.

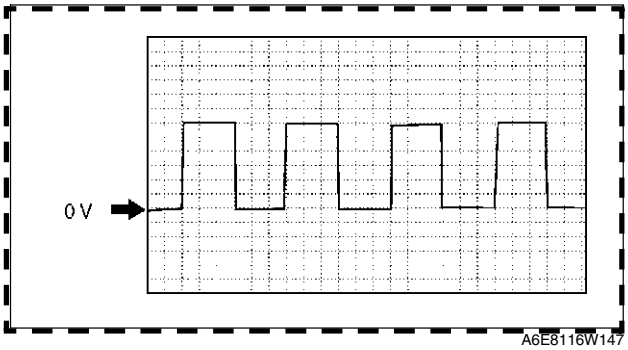

A6E8116W147

Note
- As the vehicle speed increases, the frequency shortens.

5. If the vehicle speed input signal and continuity for the wiper and washer switch is correct, inspect the windshield wiper motor.iSee *T–56* WINDSHIELD WIPER MOTOR INSPECTION)
   - Even if the windshield wiper motor is normal, if the vehicle-speed-sensing wipers do not operate correctly, replace the wiper and washer switch.

Rear Wiper and Washer Switch

1. Remove the wiper and washer switch. (See T–67 WIPER AND WASHER SWITCH REMOVAL/INSTALLATION)
2. Inspect for continuity between the wiper and washer switch terminals using an ohmmeter.
   - If not as specified, replace the wiper and washer switch.

○—○ : Continuity

Switch position	Terminal			
	F (L)	J (H)	H (J)	L (F)
OFF				
Wiper	○			○
Wiper INT	○	○		
Wiper and washer	○		○	○
Washer	○		○	

( ): Wiper and washer switch RH side

A6E8116W121

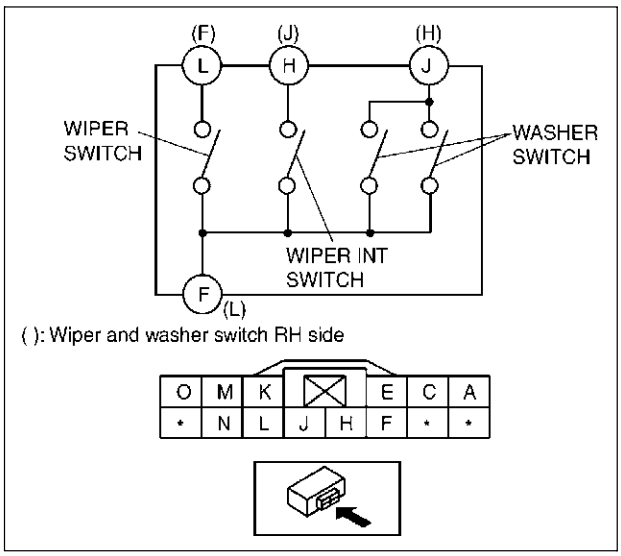

A6E8116W136

HEADLIGHT CLEANER MOTOR REMOVAL/INSTALLATION

A6E811651030W01

1. Disconnect the negative battery cable.
2. Remove the washer tank. (See T–58 WASHER TANK REMOVAL/INSTALLATION)
3. Remove the washer fluid-level sensor. (See T–59 WASHER FLUID-LEVEL SENSOR REMOVAL/INSTALLATION)
4. Remove in the order indicated in the table.

1	Connector
2	Bolt
3	Bracket
4	Headlight cleaner motor
5	Grommet

5. Install in the reverse order of removal.

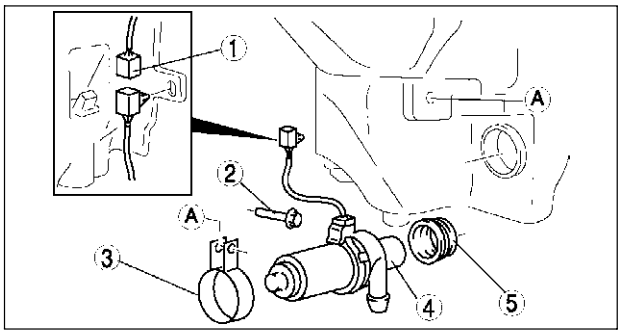

A6E8116W113

HEADLIGHT CLEANER MOTOR INSPECTION

A6E811651030W02

1. Disconnect the negative battery cable.
2. Remove the washer tank. (See T–58 WASHER TANK REMOVAL/INSTALLATION)
3. Connect battery positive voltage to terminal D and ground to terminal C of the motor.
4. Verify that the headlight cleaner motor operates.
   - If the motor does not operate, replace the headlight cleaner motor.

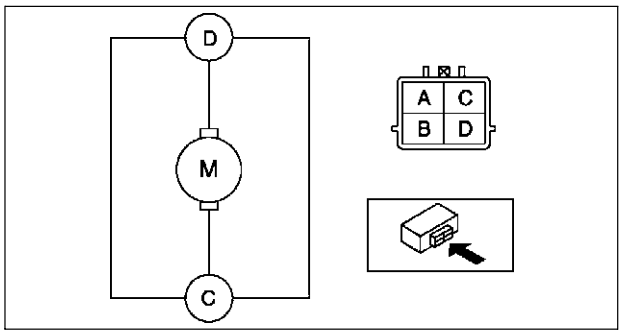

A6E8116W137

HEADLIGHT CLEANER NOZZLE REMOVAL/INSTALLATION

A6E811651030W03

1. Remove the front bumper. (See S–47 FRONT BUMPER REMOVAL/INSTALLATION)
2. Disconnect the headlight cleaner hose. (See T–71 HEADLIGHT CLEANER HOSE REMOVAL/INSTALLATION)
3. Remove in the order indicated in the table.

1	Screw
2	Spacer
3	Headlight cleaner nozzle

4. Install in the reverse order of removal.
5. Adjust the headlight cleaner nozzle. (See T–70 HEADLIGHT CLEANER NOZZLE ADJUSTMENT.)

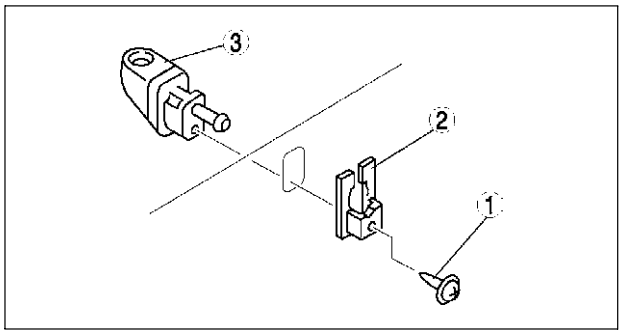

A6E8116W142

HEADLIGHT CLEANER NOZZLE ADJUSTMENT

A6E811651030W04

1. Use a needle or equivalent to adjust the headlight cleaner nozzle so that the center of fluid properly sprays on the headlight as shown in the figure.

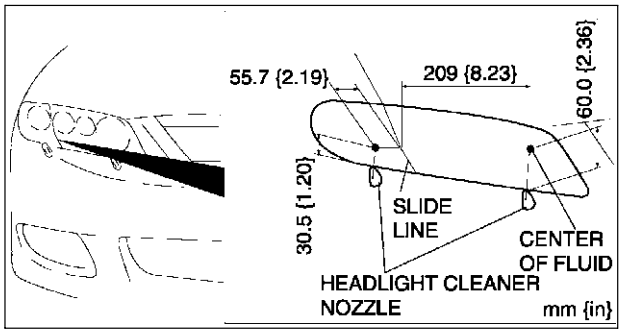

A6E8116W115

HEADLIGHT CLEANER NOZZLE CLEANING

A6E811651030W05

1. Clean the rear washer nozzle. (See T–60 WINDSHIELD WASHER NOZZLE CLEANING.)

HEADLIGHT CLEANER HOSE REMOVAL/INSTALLATION

A6E811651030W06

1. Remove the front bumper. (See S–47 FRONT BUMPER REMOVAL/INSTALLATION)
2. Remove in the order indicated in the table.

1	Clip
2	Headlight cleaner hose
3	Check valve

3. Install in the reverse order of removal.

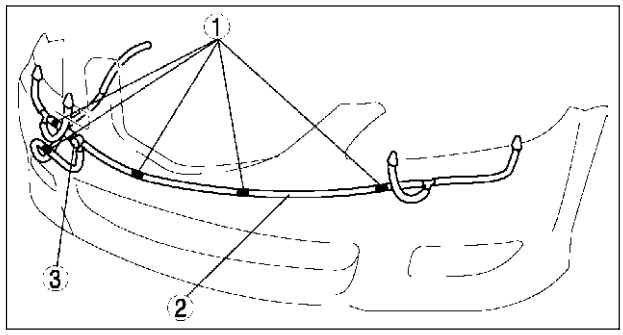

A6E8116W118

HEADLIGHT CLEANER SWITCH REMOVAL/INSTALLATION

A6E811651030W07

1. Disconnect the negative battery cable.
2. Remove in the order indicated in the table.

1	Headlight cleaner switch (See T–71 Headlight Cleaner Switch Removal Note)
2	Connector

3. Install in the reverse order of removal.

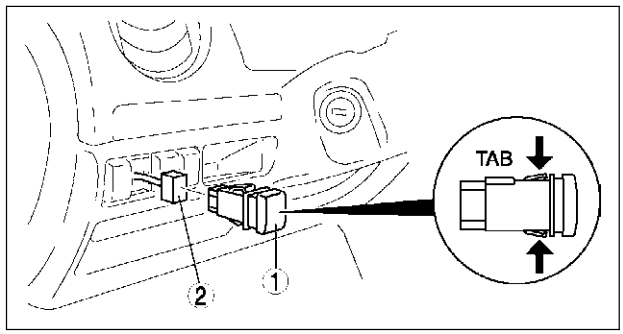

A6E8116W125

Headlight Cleaner Switch Removal Note

1. Insert your hand from the lower side of the dashboard and squeeze the tabs of the headlight cleaner switch.
2. Pull the headlight cleaner switch forward to remove it.

HEADLIGHT CLEANER SWITCH INSPECTION

A6E811651030W08

1. Disconnect the negative battery cable.
2. Remove the headlight cleaner switch. (See T–71 HEADLIGHT CLEANER SWITCH REMOVAL/INSTALLATION)
3. Inspect for continuity between the headlight cleaner switch terminals using an ohmmeter.
   - If not as specified, replace the light switch.

○—○ : Continuity ○—⊘—○ : Bulb

Switch position	Terminal			
	C	D	B	A
Pressed	○	○	○	⊘ ○
Released			○	⊘ ○

A6E8116W139

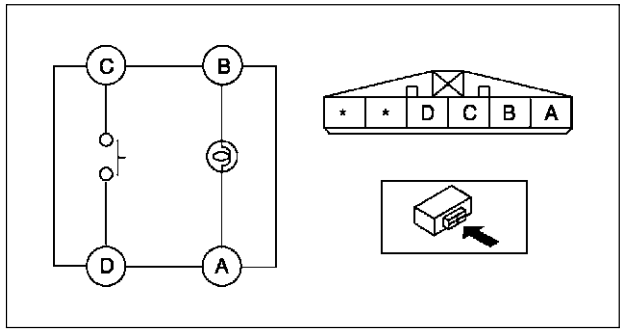

A6E8116W138

T

WARNING AND INDICATOR SYSTEM

INSTRUMENT CLUSTER REMOVAL/INSTALLATION

A6E811855430W01

Caution

- **When replacing the instrument cluster, the configuration procedure must be performed before removing the instrument cluster. If the configuration procedure is not performed before removing the instrument cluster, it is possible that the instrument cluster will not operate normally.**

1. Configurate the instrument cluter (when only replacing it). (See T–72 INSTRUMENT CLUSTER CONFIGURATION.)
2. Disconnect the negative battery cable.
3. Pull down the adjusting lever of the tilt steering wheel and push the steering wheel down.
4. Pull the steering wheel toward you.
5. Remove the meter hood.
6. Remove in the order indicated in the table.

1	Screw
2	Connector
3	Instrument cluster (See T–72 Instrument Cluster Removal Note)

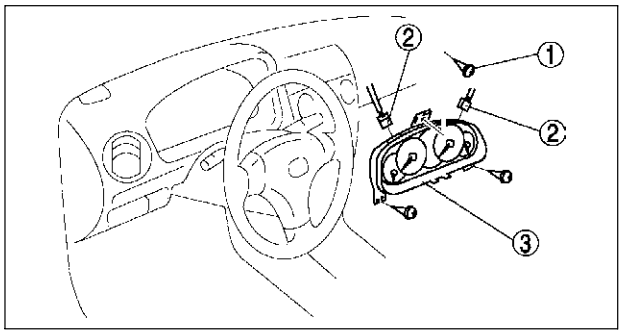

A6E8118W003

7. Install in the reverse order of removal.

Instrument Cluster Removal Note

1. When removing the instrument cluster, in order to prevent damage to the lens, cover the steering shaft with a cloth.

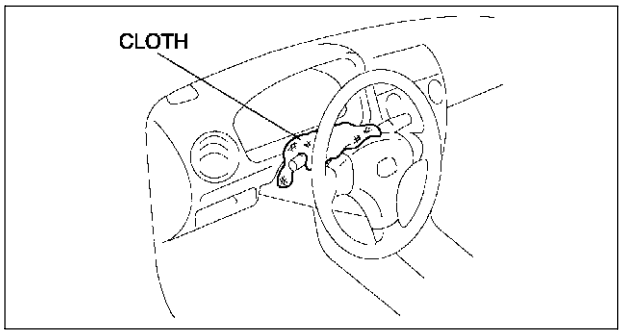

A6E8118W005

INSTRUMENT CLUSTER CONFIGURATION

A6E811855430W02

1. Connect the **SST** (WDS or equivalent) to the DLC-2.
2. Input vehicle information following the directions on the screen.
3. Select “Module programming”.
4. Select “Programmable module installation”.
5. Select the following items and perform procedures according to directions on the screen.

   Items
   - **“IC”**

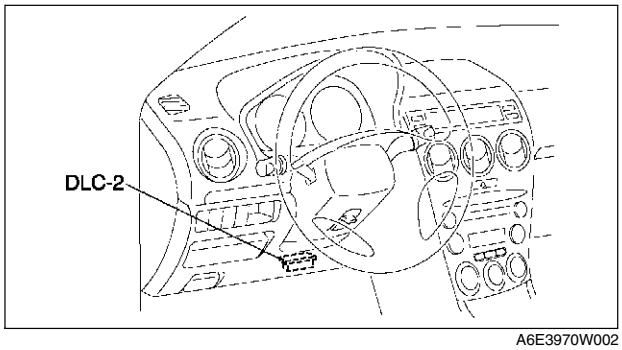

A6E3970W002

6. Retrieve DTCs by the **SST** (WDS or equivalent), then verify that there is no DTC present.
   - If DTC is present, perform applicable DTC inspection.

INSTRUMENT CLUSTER DISASSEMBLY/ASSEMBLY

A6E811855430W03

Caution
- **If the instrument cluster is dropped or the print plate is damaged, the system will not work properly and it may be the cause of trouble or malfunctions.**

1. Disassemble in the order indicated in the table.

1	Lens
2	Case
3	Meter unit

2. Assemble in the reverse order of disassembly.

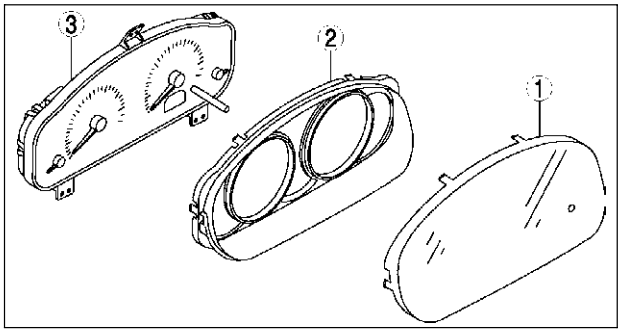

A6E8118W004

INSTRUMENT CLUSTER INSPECTION

A6E811855430W04

Speedometer
Using the input/output check mode
1. Inspect the speedometer by setting it in the input/output check mode DTC 12.

Using a speedometer tester
1. Adjust the tire air pressure to the specification.
2. Using a speedometer tester, verify that the speedometer indication is within the allowable ranges shown below.

Speedometer tester indication (km/h)	Allowable range (km/h)
20	20—24
40	40—44
60	60—64
80	80—85
100	100—105
120	120—126
140	140—146

Speedometer tester indication (mph)	Allowable range (mph)
10	10—12
20	20—22
30	30—32
40	40—43
50	50—53
60	60—63
70	70—73
80	80—84

3. Verify that fluctuation of the speedometer needle is within the allowable range.
   - If the speedometer needle does not move or the indication is outside of the allowable range, inspect the ABS (ABS/TCS) HU/CM (vehicles with ABS (ABS/TCS), DSC HU/CM (vehicles with DSC), PCM (vehicles without ABS) and related wiring harness.
     — If the ABS (ABS/TCS) HU/CM (vehicles with ABS (ABS/TCS), DSC HU/CM (vehicles with DSC), PCM (vehicles without ABS) and related wiring harness are normal, replace the instrument cluster.

Needle fluctuation allowable range
Within 3.0 km/h

T

Tachometer
Using the input/output check mode
1. Inspect the tachometer by setting it in the input/output check mode DTC 13.

Using the SSTs (WDS or equivalent)

Caution
- **If the engine speed exceeds the allowable range, the engine could be damaged. Therefore, when inspecting the tachometer, do not allow the engine speed to exceed the allowable range indication on the tachometer.**

1. Connect the **SSTs** (WDS or equivalent) to the vehicle DLC-2 16-pin connector.
2. Access and monitor PIDs by **SSTs** (WDS or equivalent).

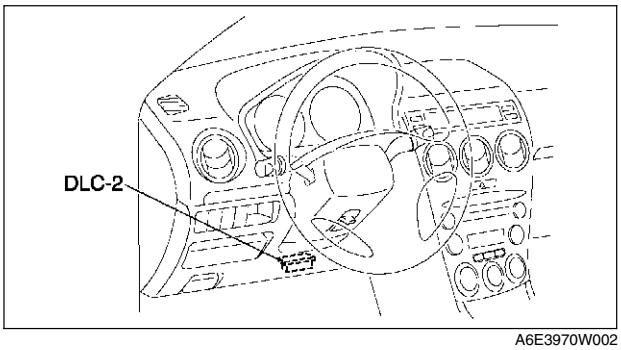

A6E3970W002

Fuel Gauge
1. Inspect the fuel gauge by setting it in the input/output check mode DTC 23.

Water Temperature Gauge
1. Inspect the water temperature gauge by setting it in the input/output check mode DTC 25.

INSTRUMENT CLUSTER REPAIR

A6E811855430W05

Note
- The needle of speedometer or tachometer may continue to rotate clockwise until it indicates over maximum graduation. If a customer complains of this concern, repair the needle position according to the following steps.

1. Verify the concern.
2. Turn the ignition switch to LOCK position.
3. Disconnect the negative battery cable.
4. Connect the negative battery cable.
5. Turn the ignition switch to ON position.
6. Verify that the needle returns to zero.
   - If the needle does not return to zero, replace the instrument cluster

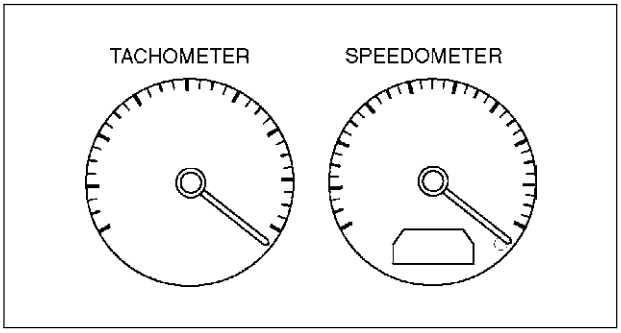

A6E8118W011

INSTRUMENT CLUSTER INPUT/OUTPUT CHECK MODE

A6E811855430W06

Note
- In this mode, it is possible to check the items in the following chart.

Diagnostic Trouble Code Chart

DTC	Checked item	Related item
01	Buckle switch	Buckle switch
04	Door switch	• Ignition key illumination • Key reminder warning buzzer • Interior light control • Power door lock system • Lights-on reminder warning buzzer
08	TNS relay	• Lights-on reminder warning buzzer • Each illumination
12	Speedometer	Speedometer
13	Tachometer	Tachometer
14	Buzzer	Buzzer
16	Fuel-level warning light	Fuel-level warning light
18	Ignition key cylinder illumination	Ignition key cylinder illumination
22	Fuel gauge sender unit	Fuel gauge
23	Fuel gauge	Fuel gauge
25	Water temperature gauge	Water temperature gauge
26	LCD	LCD
31	Key reminder switch	Key reminder warning buzzer

Note
- Diagnostic trouble codes which are not listed may be indicated, but they cannot be inspected.
- The diagnostic trouble codes are displayed in numerical order. (While performing the inspection, if you want to inspect a diagnostic trouble code of which the number is smaller than the code number you are currently inspecting, terminate the check mode then repeat the inspection from the beginning.)
- If the speed signal is put into the instrument cluster (the front wheels are rotated) while a code other than DTC 00 is display, the input/output check mode will be cancelled.
- The diagnostic trouble codes can be fast-forwarded by pushing and holding the odometer/tripmeter switch for **1 second or more**.

Operating Order

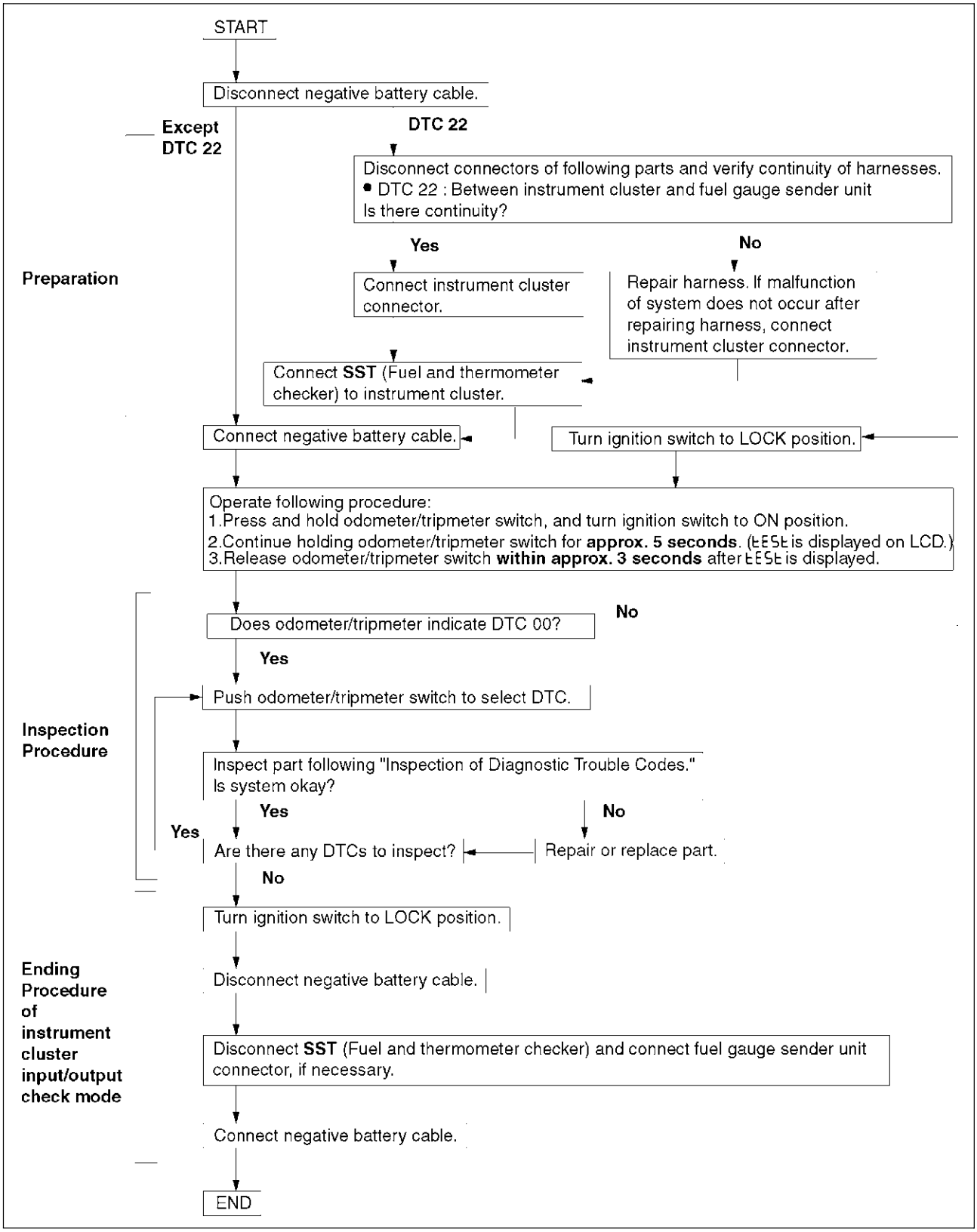

A6E8118W009

Checking Order

Note

- When inspecting more than two DTCs, perform the inspection by following the priority order of inspection indicated in the chart below.

Priority order of inspection	IG switch position	Check code
1	ON	22
2		01, 04, 08, 12, 13, 14, 16, 18, 23, 25, 26
3	LOCK	31

Inspection of Diagnostic Trouble Codes

DTC 01	Buckle switch on/off signal

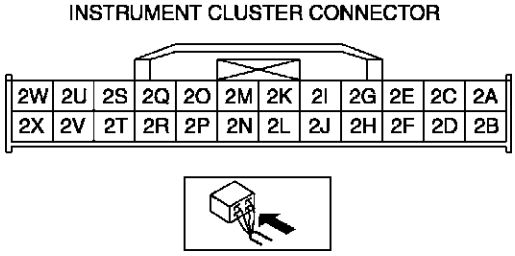

Diagnostic procedure

STEP	INSPECTION	INDICATION	ACTION
1	Unfasten driver-side seat belt. (Buckle switch on.)	01	Go to next step.
		OFF	Measure voltage at instrument cluster terminal 2G. Is voltage **0 V**? • If as specified, replace instrument cluster. • If not as specified, inspect following parts. — Buckle switch — Wiring harness (Buckle switch—instrument cluster)
2	Fasten driver-side seat belt. (Buckle switch off.)	01	Measure voltage at instrument cluster terminal 2G. Is voltage **B+**? • If as specified, replace instrument cluster. • If not as specified, inspect following parts. — Buckle switch — Wiring harness (Buckle switch—instrument cluster)
		OFF	Input signal to instrument cluster is okay.

T

DTC 04	Door switch on/off signal

INSTRUMENT CLUSTER CONNECTOR

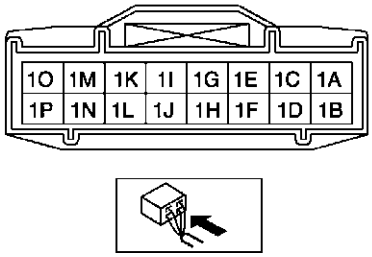

Diagnostic procedure

STEP	INSPECTION	INDICATION	ACTION
1	Open driver-side door. (Door switch on.)		Close driver-side door, then go to next step.
			Measure voltage at instrument cluster terminal 1J. Is voltage **0 V**? • If as specified, replace instrument cluster. • If not as specified, inspect following parts. — Door switch — Wiring harness (Instrument cluster—door switch)
2	Open passenger-side door. (Door switch on.)		Close passenger-side door, then go to next step.
			Measure voltage at instrument cluster terminal 1I. Is voltage **0 V**? • If as specified, replace instrument cluster. • If not as specified, inspect following parts. — Door switch — Wiring harness (Instrument cluster—door switch)
3	Open rear door on driver's side. (Door switch on.)		Close rear door on driver's side, then go to next step.
			Measure voltage at instrument cluster terminal 1I. Is voltage **0 V**? • If as specified, replace instrument cluster. • If not as specified, inspect following parts. — Door switch — Wiring harness (Instrument cluster—door switch)
4	Open rear door on passenger's side. (Door switch on.)		Close rear door on passenger's side, then go to next step.
			Measure voltage at instrument cluster terminal 1I. Is voltage **0 V**? • If as specified, replace instrument cluster. • If not as specified, inspect following parts. — Door switch — Wiring harness (Instrument cluster—door switch)

STEP	INSPECTION	INDICATION	ACTION
5	Close all doors. (Door switch off.)	01	Measure voltage at instrument cluster terminals 1I and 1J. Is voltage **B+**? • If as specified, replace instrument cluster. • If not as specified, inspect following parts. — Door switch — Wiring harness (Instrument cluster—door switch)
		0FF	Input signals to instrument cluster are okay.

DTC 08	TNS relay on/off signal

INSTRUMENT CLUSTER CONNECTOR

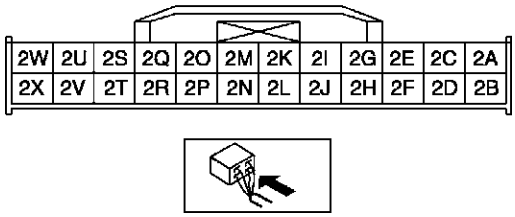

Diagnostic procedure

STEP	INSPECTION	INDICATION	ACTION
1	Turn headlight switch to TNS position. (TNS relay on.)	01	Go to next step.
		0FF	Measure voltage at instrument cluster terminal 2K. Is voltage **B+**? • If as specified, replace instrument cluster. • If not as specified, inspect following parts. — TNS relay — Wiring harness (Battery—TNS relay—instrument cluster)
2	Turn headlight switch off. (TNS relay off.)	01	Measure voltage at instrument cluster terminal 2K. Is voltage **0 V**? • If as specified, replace instrument cluster. • If not as specified, inspect following parts. — TNS relay — Wiring harness (TNS relay—instrument cluster)
		0FF	Input signal to instrument cluster is okay.

DTC 12	Operation signal to speedometer		
INSPECTION	INDICATION	SITUATION	ACTION
Wait for **2 seconds** after selecting DTC 12.	00	Speedometer needle moves full scale then returns to **60 km/h or 60 MPH**.	Speedometer is okay.
		Other than stated above.	Replace instrument cluster.
	Err	—	

T

DTC 13	Operation signal to tachometer		
INSPECTION	INDICATION	SITUATION	ACTION
Wait for **2 seconds** after selecting DTC 13.	00	Tachometer needle moves full scale then returns to **3000 rpm**.	Tachometer is okay.
		Other than stated above.	Replace instrument cluster.
	E-1	—	

DTC 14	Operation signal to buzzer		
INSPECTION	INDICATION	SITUATION	ACTION
Wait for **2 seconds** after selecting DTC 14.	01 (Fixed)	Buzzer continuously sounds.	Buzzer is okay.
		Buzzer does not continuously sound.	Replace instrument cluster.

DTC 16	Operation signal to fuel-level warning light		
INSPECTION	INDICATION	SITUATION	ACTION
Wait for **2 seconds** after selecting DTC 16.	01 (Turns on and off)	Fuel-level warning light turns on and off **three times**.	Fuel-level warning light is okay.
		Other than stated above.	Replace instrument cluster.

DTC 18	Ignition key illumination on/off signal

INSTRUMENT CLUSTER CONNECTOR

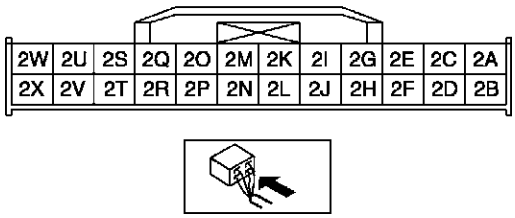

Diagnostic procedure

INSPECTION	INDICATION	SITUATION	ACTION
Wait for **2 seconds** after selecting DTC 18.	01 (Turns on and off)	Ignition key illumination turns on and off **three times**.	Ignition key illumination is okay.
		Other than stated above.	Measure voltage at instrument cluster terminal 2C. Is voltage **B+**? • If as specified, replace instrument cluster. • If not as specified, inspect following parts. — Ignition key illumination — Wiring harness (Battery—ignition key illumination—instrument cluster)

DTC 22	Fuel level signal

INSTRUMENT CLUSTER CONNECTOR

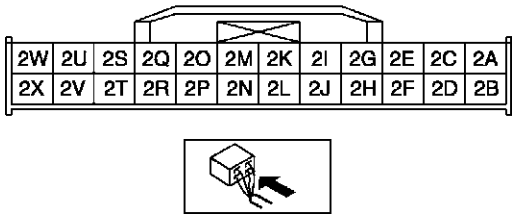

Diagnostic procedure

STEP	INSPECTION	INDICATION	ACTION
1	Select DTC 22 with fuel gauge sender unit connector disconnected.	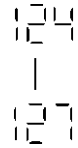	Go to next step.
		Other than stated above.	Replace instrument cluster.
2	Connect between instrument cluster terminals 2D and 2M.	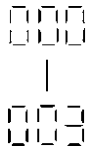	Go to next step.
		Other than stated above.	Replace instrument cluster.
3	Using **SST** (Fuel and thermometer checker) or resistor, input **20 ohms** to between instrument cluster terminals 2D and 2M.	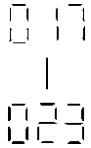	Go to next step.
		Other than stated above.	Replace instrument cluster.
4	Using **SST** (Fuel and thermometer checker) or resistor, input **60 ohms** to between instrument cluster terminals 2D and 2M.		Go to next step.
		Other than stated above.	Replace instrument cluster.
5	Using **SST** (Fuel and thermometer checker) or resistor, input **100 ohms** to between instrument cluster terminals 2D and 2M.		Inspect fuel gauge sender unit.
		Other than stated above.	Replace instrument cluster.

T

DTC 23	Operation signal to fuel gauge		
INSPECTION	**INDICATION**	**SITUATION**	**ACTION**
Wait for **2 seconds** after selecting DTC 23.		Fuel gauge indicates in following order for every **2 seconds**. • F→1/2→E→F (fixed)	Fuel gauge is okay.
		Other than stated above.	Replace instrument cluster.
		Replace instrument cluster.	

DTC 25	Operation signal to water temperature gauge		
INSPECTION	**INDICATION**	**SITUATION**	**ACTION**
Wait for **2 seconds** after selecting DTC 25.		Water temperature gauge indicates in following order for every **2 seconds**. • H→Center→C→H (fixed)	Water temperature gauge is okay.
		Other than stated above.	Replace instrument cluster.
		Replace instrument cluster.	

DTC 26	LCD indication		
INSPECTION	**INDICATION**	**SITUATION**	**ACTION**
Select DTC 26.		Indication is normal.	LCD is okay.
		Other than stated above.	Replace instrument cluster.

DTC 31	Key reminder on/off signal

INSTRUMENT CLUSTER CONNECTOR

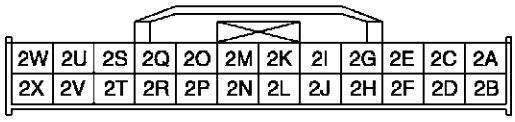

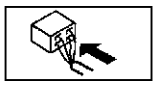

Diagnostic procedure

STEP	INSPECTION	INDICATION	ACTION
1	Remove key from steering lock and then insert key into steering lock after selecting DTC 31. (Key reminder switch on.)		Go to next step.
		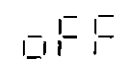	Measure voltage at instrument cluster terminal 2B. Is voltage **B+**? • If as specified, replace instrument cluster. • If not as specified, replace following parts. — Key reminder switch — Wiring harness (Battery—key reminder switch—instrument cluster)

STEP	INSPECTION	INDICATION	ACTION
2	Remove key from steering lock (Key reminder switch off.)	01	Measure voltage at instrument cluster terminal 2B. Is voltage **0 V**? • If as specified, replace instrument cluster. • If not as specified, inspect following parts. — Key reminder switch — Wiring harness (Key reminder switch— instrument cluster)
		0C	Input signal to instrument cluster is okay.

PID/DATA MONITOR AND RECORD PROCEDURE

1. Connect **SST** (WDS or equivalent) to the vehicle DLC-2 16-pin connector.
2. Access and monitor PIDs using **SST** (WDS or equivalent).

A6E811855430W07

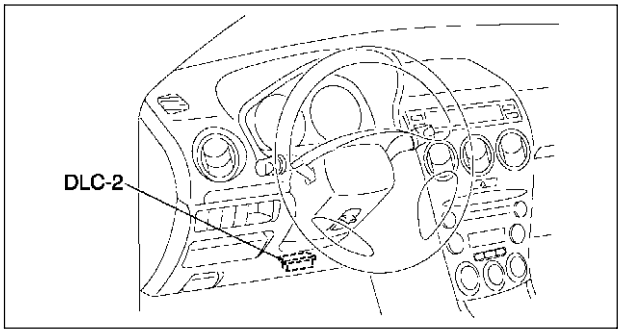

A6E3970W002

Monitor Item Table

- The PID/DATA monitoring items for the instrument cluster is as shown in the table below.

—: Not applicable

PID item	Definition	Unit/Condition		Terminal
CCNT_HE	Continuous codes	Number of continuous codes		—
ECT_GAUGE	Temperature gauge	°C	°F	2W, 2X
FUEL	Fuel flow	l/min		2M
ODOMETR	Total distance	km	mile	2W, 2X
SPEEDSG	Speedometer	km/h	mile/h	
RPM	Tachometer	rpm		

FUEL GAUGE SENDER UNIT INSPECTION

1. Move the float to the topmost and bottommost positions, and verify that the resistance between terminals A and B of the unit and the position of the float are as indicated in the figure.
   - If they are not as indicated, replace the fuel gauge sender unit.

A6E811860960W01

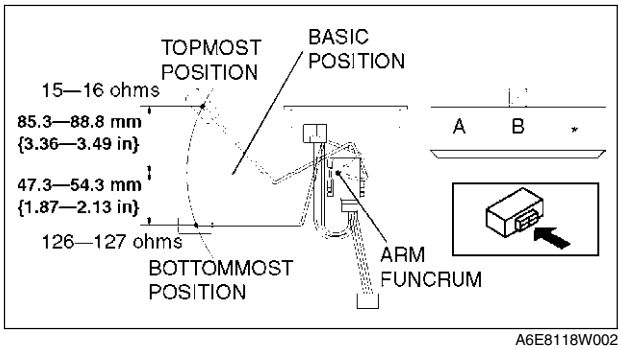

A6E8118W002

OIL PRESSURE SWITCH INSPECTION

A6E811818500W01

1. Verify that the oil pressure warning light illuminates when the ignition switch is at ON position.
2. Verify that the oil pressure warning light goes off when the engine is started.
   - If the oil pressure warning light does not illuminate or remains illuminated, inspect the related wiring harness.
     — If the related wiring harness are normal, inspect the oil pressure. (See D–3 OIL PRESSURE INSPECTION.)
       - If the oil pressure is normal, replace the oil pressure switch.

HORN REMOVAL/INSTALLATION

A6E811866790W01

1. Disconnect the negative battery cable.
2. Bend the mud guard.
3. Remove in the order indicated in the table.

1	Bolt
2	Connector
3	Horn

4. Install in the reverse order of removal.

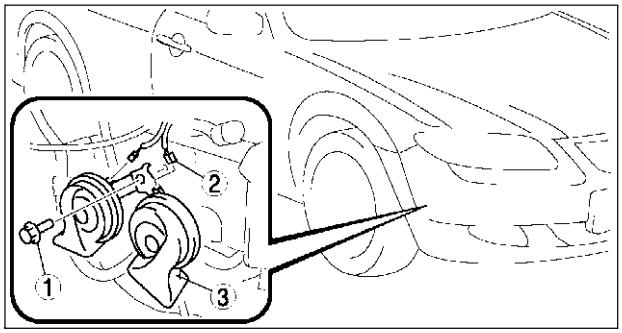

A6E8118W001

INFORMATION DISPLAY REMOVAL/INSTALLATION

A6E811855000W01

1. Disconnect the negative battery cable.
2. Remove the center panel module. (See T–96 CENTER PANEL MODULE REMOVAL/INSTALLATION.)
3. Remove the LCD unit. (with car-navigation system) (See T–98 LCD UNIT REMOVAL/INSTALLATION.)
4. Remove the center box. (without car-navigation system)
5. Remove in the order indicated in the table.
6. Install in the reverse order of removal.

1	Short harness
2	Information display (See T–84 Information Display Removal Note)
3	LCD unit (with car-navigation system)
	Center box (without car-navigation system)

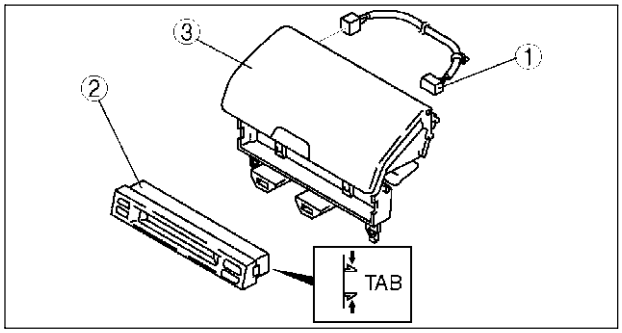

A6E8118W008

Information Display Removal Note

1. Squeeze the tabs of information display and pull it forward to it.

THEFT-DETERRENT SYSTEM

BONNET SWITCH INSPECTION

A6E812001084W01

Note
- Bonnet switch has a built-in bonnet lock.

1. Open the bonnet.
2. Disconnect the negative battery cable.
3. Remove the radiator grille.
4. Disconnect the bonnet switch connector.
5. Check the continuity between the bonnet switch terminals A and B using an ohmmeter.
   - If there is continuity, replace the bonnet switch.

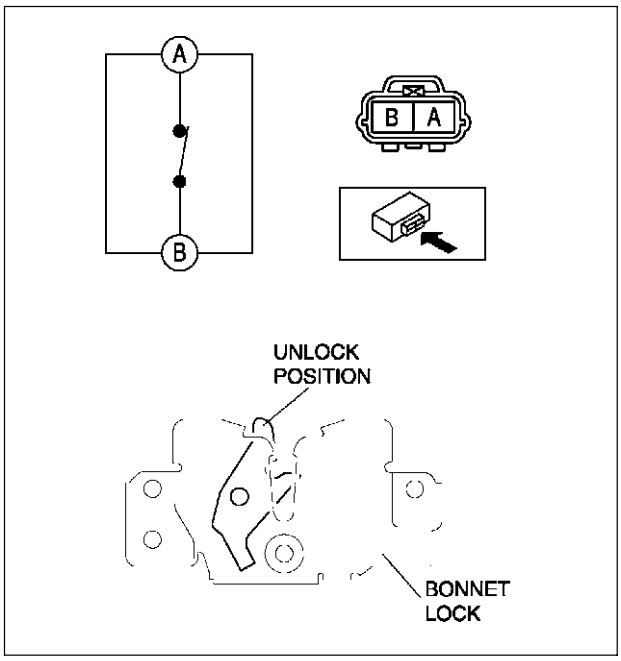

A6E8120W002

6. Lock the bonnet lock using a flat-head screwdriver or equivalent as shown.
7. Check the no continuity between the bonnet switch terminals A and B using an ohmmeter.
   - If there is no continuity, replace the bonnet switch.

Caution
- **After the inspection, unlock the bonnet lock. If closing the bonnet with the bonnet lock locked, the bonnet lock and/or bonnet striker may be broken.**

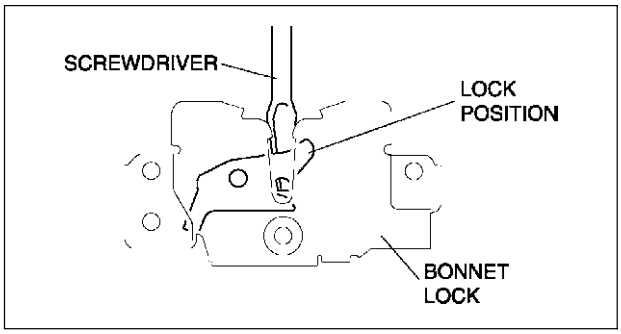

A6E8120W003

T

THEFT-DETERRENT CONTROL MODULE REMOVAL/INSTALLATION

A6E812067790W01

1. Disconnect the negative battery cable.
2. Remove the center panel module. (See T–96 CENTER PANEL MODULE REMOVAL/INSTALLATION.)
3. Remove in the order indicated in the table.

1	Screw
2	Connector
3	Theft-deterrent control module

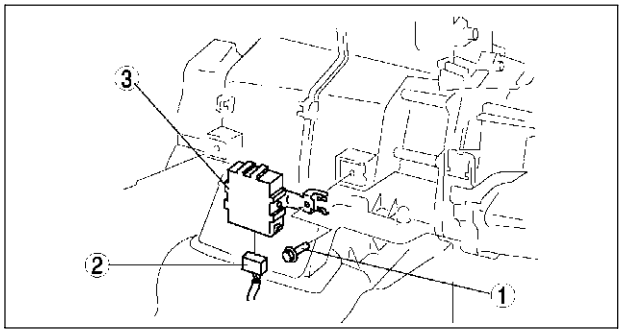

A6E8120W001

4. Install in the reverse order of removal.

THEFT-DETERRENT CONTROL MODULE INSPECTION

A6E812067790W02

1. Remove the theft-deterrent control module without disconnecting the connectors.
2. Measure the voltage at the theft-deterrent control module terminals as indicated below.
3. Disconnect the theft-deterrent control module connector before inspecting for continuity at terminals L, Q, S, T, and V.
4. If not as specified, inspect the parts listed under “Action.”
   - If the parts and wiring harnesses are okay but the system still does not work properly, replace the theft-deterrent control module.

Terminal Voltage Table (Reference)

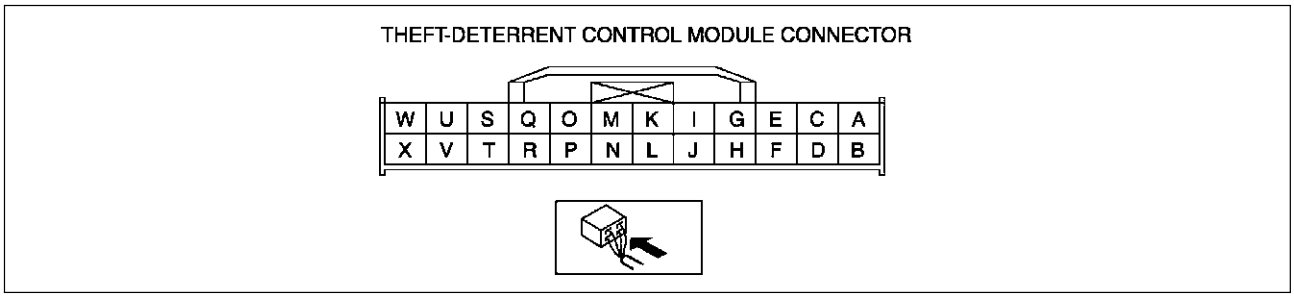

A6E8120W004

Terminal	Signal	Connected to	Test condition	Voltage (V)/ continuity	Action
A	—	—	—	—	—
B	IG1	METER IG 15 A fuse	Ignition switch at ON position	B+	• Inspect ignition switch (See T–20 IGNITION SWITCH INSPECTION) • Inspect METER IG 15 A fuse • Inspect related harness
			Ignition switch at LOCK or ACC position	Below 1.0	
C	Power supply	ROOM 15 A fuse	Under any condition	B+	• Inspect ROOM 15 A fuse • Inspect related harness
D	—	—	—	—	—
E	—	—	—	—	—
F	Intruder sensor power supply	Intruder sensor	Theft-deterrent system pre-arming or arming	B+	• Inspect related harness
			Other	Below 1.0	
G	Security light on/off	Security light	Security light on	Below 2.0	• Inspect security light • Inspect related harness
			Security light off	B+	
H	Hazard warning signal output	Flasher unit	Theft-deterrent system alarm: Active	Alternates between below 1.0 and B+	• Inspect flasher unit (See T–44 FLASHER UNIT INSPECTION) • Inspect related harness
			Theft-deterrent system alarm: Other	B+	

Terminal	Signal	Connected to	Test condition	Voltage (V)/ continuity	Action
I	Theft-deterrent siren on/off	Theft-deterrent siren	Theft-deterrent system alarm: Active	Alternates between below 1.0 and B+	• Inspect related harness
			Theft-deterrent system alarm: Other	B+	
J	• Theft-deterrent system recognition signal output • Keyless entry system operation signal input	Door lock timer unit	Under any condition	B+	• Inspect door lock timer unit (See S–34 DOOR LOCK TIMER UNIT INSPECTION) • Inspect related harness
K	Horn on/off	Horn relay	Theft-deterrent system alarm: Other	B+	• Inspect horn relay (See T–24 RELAY INSPECTION) • Inspection related harness
			Theft-deterrent system alarm: Active	Alternates between below 1.0 and B+	
L	Theft-deterrent control module ground	GND	Under any condition: inspect for continuity to ground	Yes	• Inspect GND
M	Key reminder switch on/off	Key reminder switch	Key reminder switch on (key inserted)	B+	• Inspect key reminder switch (See T–21 KEY REMINDER SWITCH INSPECTION) • Inspect related harness
			Key reminder switch off (key removed)	Below 1.0	
N	—	—	—	—	—
O	Intruder sensor on/off	Intruder sensor	Theft-deterrent system pre-arming or arming	Alternates between below 1.0 and B+	• Inspect related harness
P	—	—	—	—	—
Q	Bonnet open/closed	Bonnet switch	Bonnet switch on: inspect for continuity to ground	Yes	• Inspect bonnet switch (See T–85 BONNET SWITCH INSPECTION) • Inspect related harness
			Bonnet switch off: inspect for continuity to ground	No	
R	Trunk compartment light switch/cargo compartment light switch on/off	• Trunk compartment light switch • Cargo compartment light switch	Trunk compartment light switch/cargo compartment light switch on	Below 1.0	• Inspect trunk compartment light switch (See T–51 TRUNK COMPARTMENT LIGHT SWITCH INSPECTION) • Inspect cargo compartment light switch (See T–50 CARGO COMPARTMENT LIGHT SWITCH INSPECTION) • Inspect related harness
			Trunk compartment light switch/cargo compartment light switch off	B+	
S	Door open/closed	Door switch	Any door open: inspect for continuity to ground	Yes	• Inspect door switch (See T–52 DOOR SWITCH INSPECTION) • Inspect related harness
			All doors closed: inspect for continuity to ground	No	

T

Terminal	Signal	Connected to	Test condition	Voltage (V)/ continuity	Action
T	Lock/unlock	• Passenger's door lock-link switch • Rear door lock-link switch	Passenger's and rear door lock-link switch locked: inspect for continuity to ground	No	• Inspect passenger's or rear door lock-link switch (See S–30 FRONT DOOR LOCK ACTUATOR INSPECTION) (See S–32 REAR DOOR LOCK ACTUATOR INSPECTION) • Inspect related harness
			Passenger's or any rear door lock-link switch unlocked: inspect for continuity to ground	Yes	
U	—	—	—	—	—
V	Lock/unlock	• Driver's door lock-link switch	Driver's door lock-link switch locked: inspect for continuity to ground	No	• Inspect driver's door lock-link switch (See S–30 FRONT DOOR LOCK ACTUATOR INSPECTION) • Inspect related harness
			Driver's door lock-link switch unlocked: inspect for continuity to ground	Yes	
W	Engine speed	• ABS (ABS/TCS) HU/CM (with ABS (ABS/TCS)) • DSC HU/CM (with DSC)	(See T–88 W Terminal Inspection)	—	• Inspect ABS (ABS/TCS) HU/CM (See P–29 ABS (ABS/TCS) HU/CM INSPECTION) • Inspect DSC HU/CM (See P–40 DSC HU/CM INSPECTION) • Inspect related harness
X	—	—	—	—	—

W Terminal Inspection

1. Connect **SST** (WDS or equivalent) to the vehicle DLC-2 16-pin connector.
2. Access and monitor RPM of PID using **SST** (WDS or equivalent).
   - If engine speed signal normal, go to next step.
   - If engine speed signal abnormal, inspect the ABS (ABS/TCS) HU/CM, DSC HU/CM and related wiring harness.
3. Inspect for continuity between the ABS (ABS/TCS) HU/CM terminal X and the theft-deterrent control module terminal W, or DSC HU/CM terminal AB and the theft-deterrent control module terminal W using an ohmmeter.
   - If not continuity, replace the related wiring harness.
   - If wiring harness is normal, replace the theft-deterrent control.

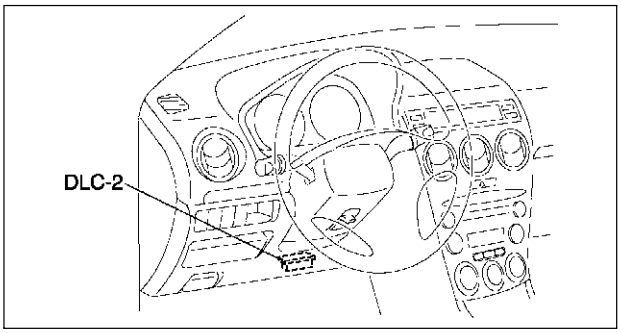

A6E3970W002

INTRUDER SENSOR REMOVAL/INSTALLATION

A6E812000172W01

1. Disconnect the negative battery cable.
2. Remove the headliner.
3. Remove in the order indicated in the table.
4. Install in the reverse order of removal.

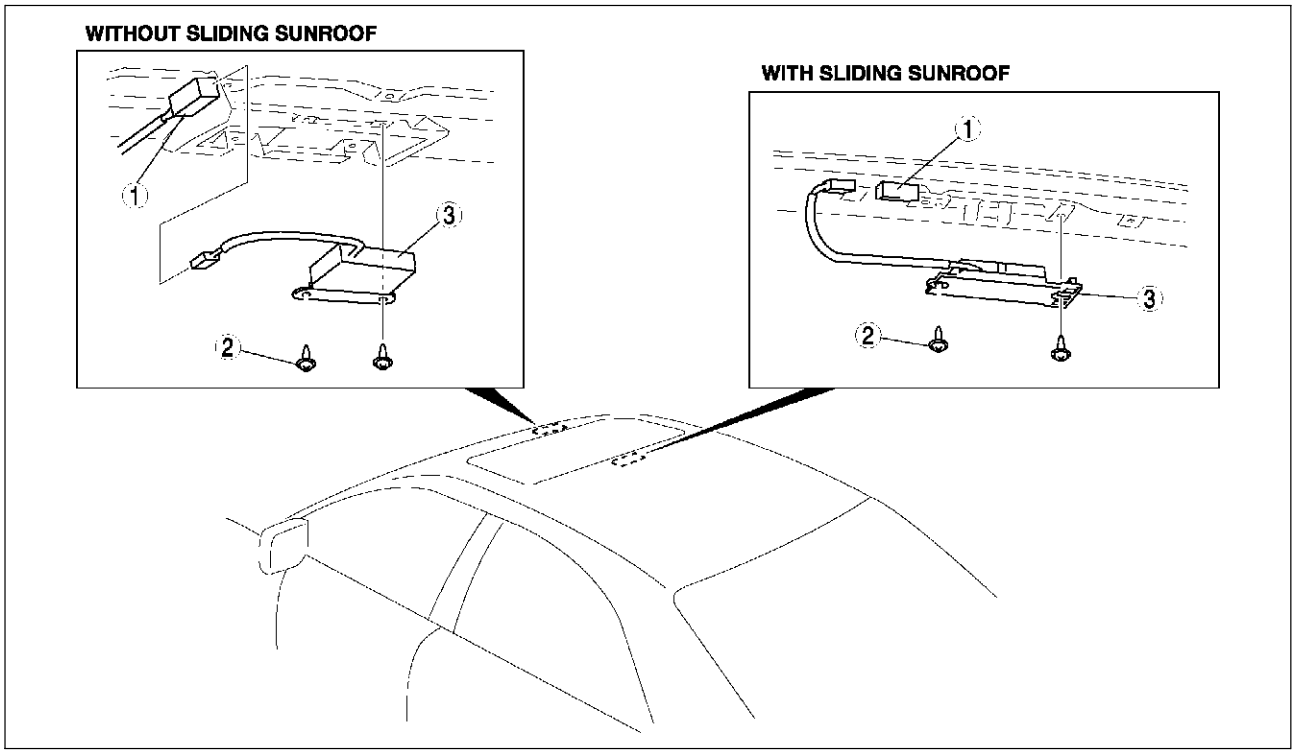

A6E8120W005

1	Connector
2	Screw
3	Intruder sensor

THEFT-DETERRENT SIREN REMOVAL/INSTALLATION

A6E812000173W01

1. Disconnect the negative battery cable.
2. Remove the left side trunk side trim.
3. Remove in the order indicated in the table.

1	Nut
2	Connector
3	theft-deterrent siren

4. Install in the reverse order of removal.

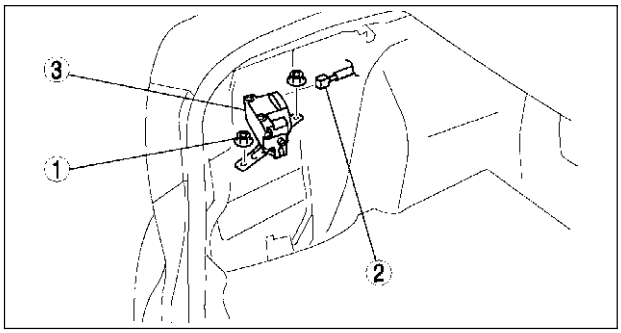

A6E8120W006

IMMOBILIZER SYSTEM

COIL REMOVAL/INSTALLATION

A6E812267004W01

Note
- Do not remove the coil unless you are replacing it.
- When only the coil is replaced, the immobilizer system reprogram procedure is not necessary.

1. Disconnect the negative battery cable.
2. Remove the column cover.
3. Remove in the order indicated in the table.

1	Connector
2	Coil

4. Install in the reverse order of removal.

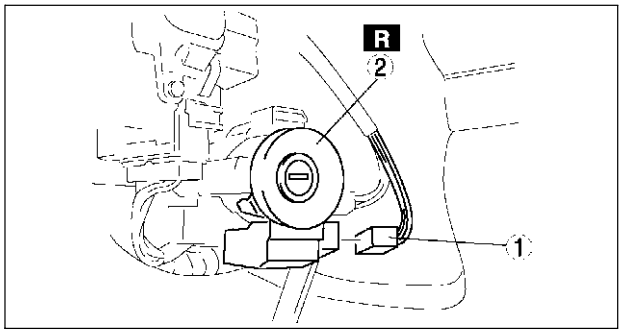

A6E8122W001

IMMOBILIZER SYSTEM REPROGRAM PROCEDURE

A6E812267000W01

Note
- When an error occurs during the reprogram procedures, except when the PCM is replaced, repeat the procedure from Step 1. If you still cannot reprogram, confirm how many keys can start the engine. Then, perform the key replacement or addition reprogram procedure according to the valid key number.
- To make a copy of the key or replace the immobilizer system component parts (the key(s), and/or PCM), the customer should bring all keys to the dealer. This is because the previously programmed key IDs are erased when reprogramming the key IDs into the PCM.
- The PCM cannot be changed from one car to another. If an PCM is replaced with one from another car, the engine will not start.
- The PCM should not be newly replaced as a trial during troubleshooting. If this is done, the ID and code word will be programmed into the new unit and it cannot be used for other cars even if you find that the old unit was normal.
- The immobilizer system cannot be deactivated.
- Confirm that all keys registered can start the engine after the reprogram procedure. When confirming, wait for **more than 5 seconds** before inserting the next key.
- When the customer does not need to register more than two keys, the following procedures can be stopped after registering two keys.

Key Replacement or Addition
When the customer has two or more valid keys

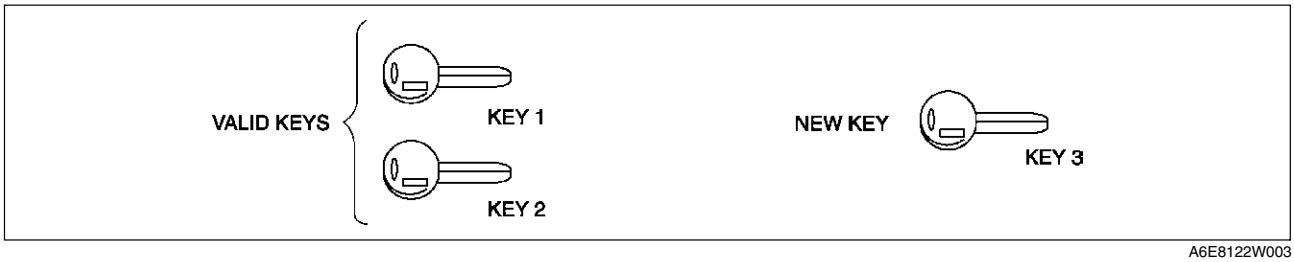

A6E8122W003

Note
- If no specific time interval is given, each step should be performed **within 30 seconds** of the previous step.

1. Cut new transponder-equipped key(s).
2. Using key 1, turn ignition switch to ON position.
   (1) Observe illumination of security light in instrument cluster.
   (2) After the security light turns off, turn key 1 to LOCK position **within 2 seconds** and remove it from the steering lock.
3. Repeat Step 2 with key 2.
4. Repeat Step 2 with key 3.
5. If there are 4—8 keys (valid and/or new keys), repeat Step 2.

When the customer has only one or no valid key

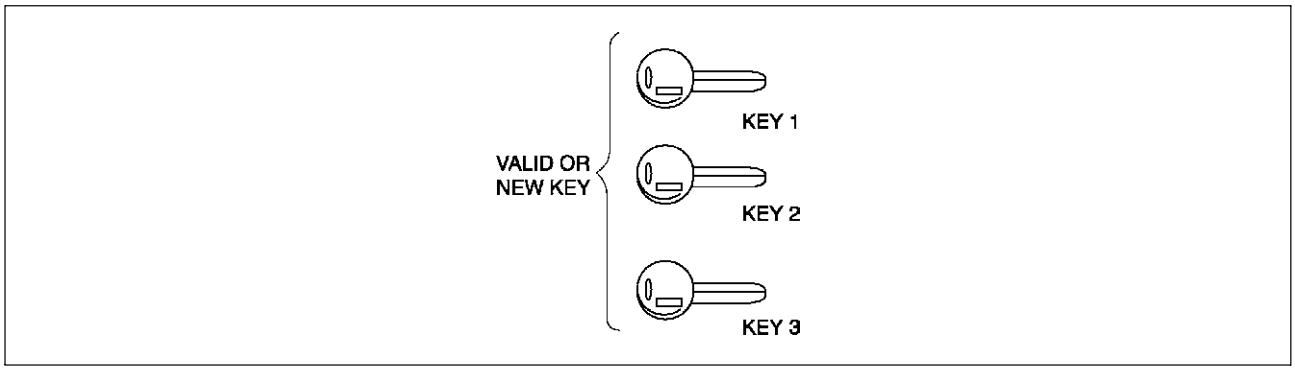

A6E8122W002

1. Cut new transponder equipped key(s) if necessary.
2. Connect the **SST** (WDS or equivalent).
3. Using key 1, turn ignition switch to ON position.
   - Valid key: The security light illuminates, then turns off after **approx. 3 seconds**.
   - New key: The security light illuminates. After **approx. 1 minute** DTC B1601 (DTC 15) is output
   (1) Perform security access approval. (See T–92 Security Access Procedure.)
   (2) Select "Ignition Key Code Erase".

   Note
   - Do not select any other command from this menu.

   (3) Turn key 1 to LOCK position for **more than 1 second**.
   (4) Turn key 1 to ON position for **more than 1 second**. (After **approx. 1 minute** DTC B1213 (DTC 21) is output.)
   (5) Verify the security light is illuminated, then turn key 1 to LOCK position.
   (6) Remove key 1 from steering lock.
4. Using key 2, turn ignition switch to ON position for **more than 1 second**. Observe that security light illuminates (for **approx. 3 seconds**).
   (1) Verify the security light is illuminated, then turn key 2 to LOCK position and remove from steering lock.
5. Repeat Step 4 with key 3.
6. If there are 4—8 keys (valid and/or new keys), repeat Step 5.
7. After reprogramming, clear DTCs of PCM with **SST** (WDS or equivalent).

PCM Replacement

- After PCM replacement, refer to the procedure for "When the customer has only one or no valid key", and perform registration. (See T–91 When the customer has only one or no valid key.)

Enabling/Disabling Key Reprograming Without Using SST (WDS or Equivalent)

Note
- With this function, the need for use of the **SST** (WDS or equivalent) to perform key registration when following the "When the customer has two or more valid keys" procedure can be optionally inhibited or prohibited. This function is provided to prohibit drivers from performing the reprogram procedure on vehicles owned by rental car companies or other large vehicle fleet owners.

1. Connect the **SST** (WDS or equivalent).
2. Using valid or new key, turn ignition switch to ON position.
3. Perform security access approval. (See T–92 Security Access Procedure.)
4. Select "Customer Spare Key Programming Enable/Disable".
   - Enable: Key registration can be performed without using the **SST** (WDS or equivalent).
   - Disable: Key registration can only be performed using the **SST** (WDS or equivalent).

Note
- At the time of new vehicle delivery, the function is set on "Enable".

Security Access Procedure

Note
- When using a **SST** (WDS or equivalent) or equivalent to perform "Ignition Key Code Erase" or "Customer Spare Key Programming Enable/Disable", it is necessary to obtain security access approval.

1. Connect the **SST** (WDS or equivalent).
2. Select "Tool box", "Body", "Security", and then "PATS Functions" (in this order).
3. The **SST** (WDS or equivalent). will read out an outcode depending on the designated procedure.
4. Access the Mazda official website to obtain the incode that corresponds to the outcode. Refer to Service Information Ref. No. A001/02 for details of this procedure.
5. Input the incode to the **SST** (WDS or equivalent).

AUDIO AND NAVIGATION SYSTEM

ANTI-THEFT SYSTEM

A6E812466900W01

Alarm Conditions

- If the anti-theft system protection has been activated, any one of the following conditions will trigger the system:
  - — Disconnected battery cable
  - — Discharged battery
  - — Disconnected audio unit connectors
- If the system is triggered, the audio unit will then be inoperative when it is reconnected to a power source, and "code" will flash on the display until the preselected code number is input. If the anti-theft system is triggered, follow the procedures in "Canceling Anti-theft Operation" to reset the unit.

Operation	Reference
Input code number to activate anti-theft system	Setting the Code Number
Delete previous code number and set new number	Canceling the Code Number
Resume audio unit operation after anti-theft system is triggered	Canceling Anti-theft Operation

Setting the Code Number

Complete each step (Steps 1–3) **within 10 seconds** or the setting procedure will be canceled.

1. Turn the ignition switch to ACC position and then turn off the audio unit.
2. First press the AUTO-M button, then simultaneously press channel button 6 for **approximately 2 seconds** until "CODE" appears on the display.

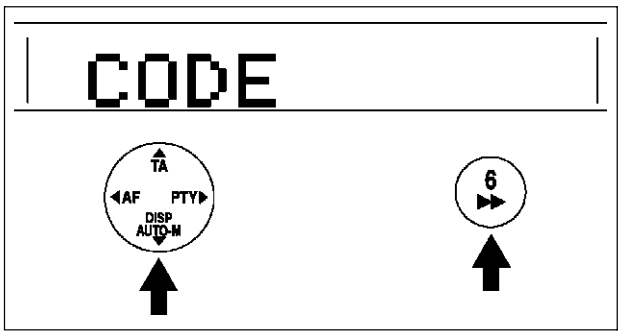

A6E8124W025

3. Press the AUTO-M button again, then simultaneously press channel button 6 until bars appear on the display.
4. Select a personal code number and record it before inputting it. If the number is input and then forgotten, it cannot be canceled, and if the unit is disconnected again, the audio unit will be inoperative.

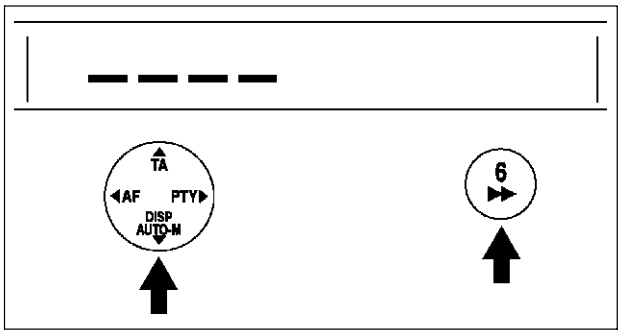

A6E8124W026

5. Use channel buttons 1–4 to input the selected code number. Press button 1 for the first digit, 2 for the second, 3 for the third, and 4 for the last digit. Input the number **within 10 seconds**. If the display is deleted, repeat the procedure from Step 1.

Note

- Perform Step 6 **within 10 seconds** after Step 5.

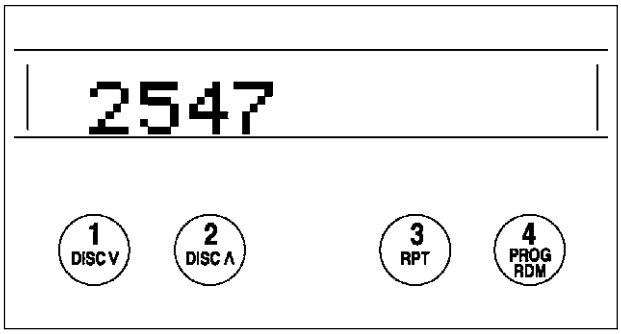

A6E8124W027

T

6. With the code number displayed, press the AUTO-M button, then simultaneously press channel button 6 for **approximately 2 seconds**. “CODE” will be displayed for **approximately 5 seconds**. After it disappears, the code number is set.
7. If “Err” (error) appears on the display, repeat the procedure from Step 1. If input error is repeated three times, turn the ignition switch to LOCK position and repeat the procedure from Step 1.

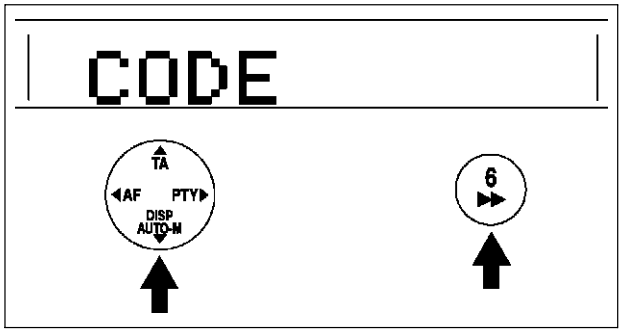

A6E8124W025

Canceling the Code Number

Complete each step (Steps 1–3) **within 10 seconds** or the canceling procedure will be canceled.

1. Turn the ignition switch to ACC position and then turn off the audio unit.
2. First press the AUTO-M button, then simultaneously press channel button 6 for **approximately 2 seconds** until “CODE” appears on the display.

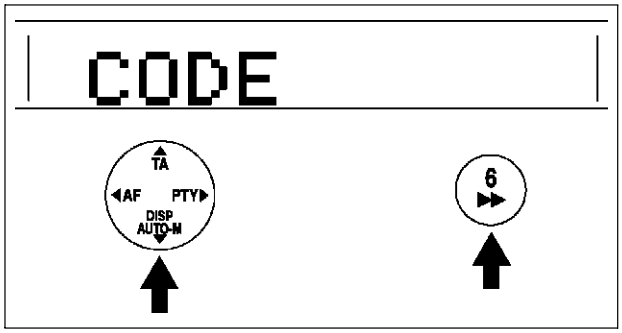

A6E8124W025

3. Press the AUTO-M button again, then simultaneously press channel button 6 until bars appear on the display.

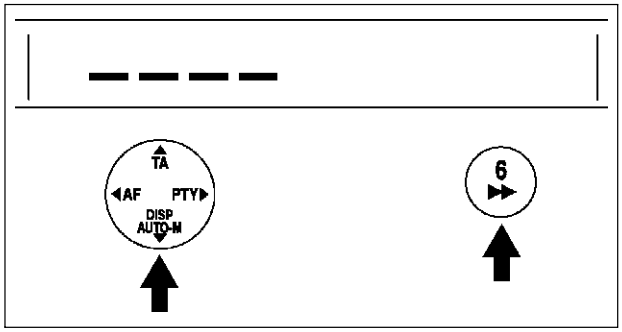

A6E8124W026

4. Use channel buttons 1–4 to input the current code number. Press button 1 for the first digit, 2 for the second, 3 for the third, and 4 for the last digit. Input the number **within 10 seconds**. If the display is deleted, repeat the procedure from Step 1.

Note
- Perform Step 5 **within 10 seconds** after Step 4.

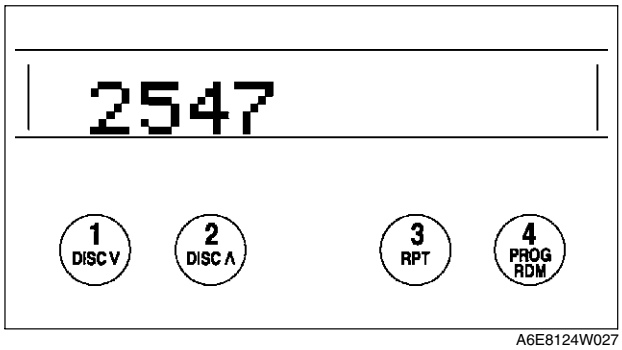

A6E8124W027

5. With the code number displayed, press the AUTO-M button, then simultaneously press channel button 6 for **approximately 2 seconds**. “CODE” will be displayed for **approximately 5 seconds**. After it disappears, the code number is canceled.
6. If “Err” (error) appears on the display, repeat the procedure from Step 4.

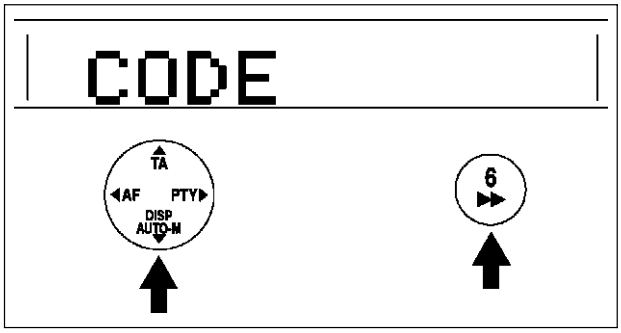

A6E8124W025

Canceling Anti-theft Operation

Properly input the selected code number to deactivate the anti-theft system and resume normal audio operation.

1. Turn the ignition switch to ACC position. (“CODE” will flash on the display.)
2. First press the AUTO-M button, then simultaneously press channel button 6 for **approximately 2 seconds** until bars appears on the display.

Note
- Perform Step 3 **within 10 seconds** after Step 2.

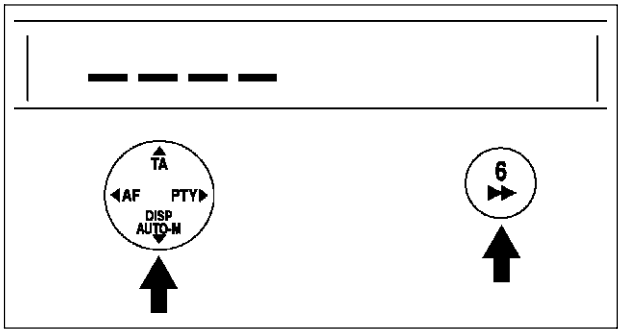

A6E8124W026

3. Use channel buttons 1–4 to input the selected code number. Press button 1 for the first digit, 2 for the second, 3 for the third, and 4 for the last digit. Input the number **within 10 seconds**. If the display is deleted, repeat the procedure from Step 1.

Caution
- **Three consecutive errors, including turning the ignition switch to LOCK position and disconnecting the audio unit, will activate the anti-theft system and render the audio unit completely inoperative.**

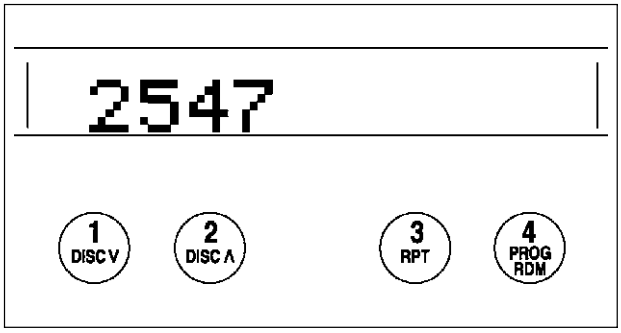

A6E8124W027

4. With the code number displayed, press the AUTO-M button, then simultaneously press channel button 6 for **approximately 2 seconds**. “CODE” will flash for **approximately 5 seconds**..
5. If “Err” (error) appears on the display, repeat the procedure from Step 1.

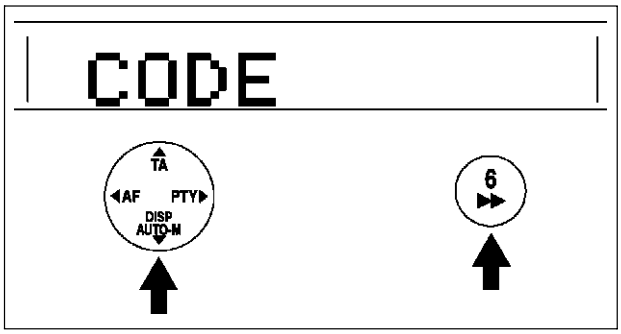

A6E8124W025

T

CENTER PANEL MODULE REMOVAL/INSTALLATION

A6E812466900W02

1. Cancel the anti-theft operation. (with anti-theft system) (See T–93 ANTI-THEFT SYSTEM.)
2. Disconnect the negative battery cable.
3. Remove the glove compartment.
4. Remove the rear console.
5. Remove in the order indicated in the table.

1	Dial (manual A/C only)
2	Screw (manual A/C only)
3	Screw
4	Bolt
5	Center panel module (See T–96 Center Panel Module Removal Note)
6	Connector
7	Antenna feeder

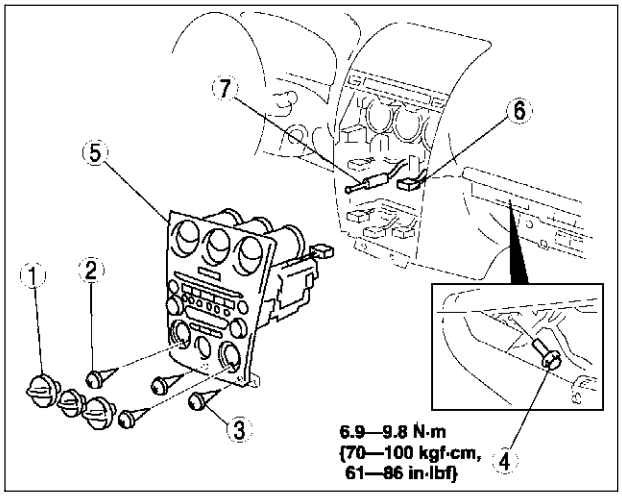

A6E8124W020

6. Install in the reverse order of removal.

Caution

- **Make certain that the wiring harness and antenna feeder are not caught between the unit and dashboard. If the harness or the antenna feeder is caught between the unit and dashboard, it may cause trouble or malfunctions.**

7. Operate the anti-theft system by setting the code number. (with anti-theft system) (See T–93 ANTI-THEFT SYSTEM.)

Center Panel Module Removal Note

1. Pull the center panel module toward you, then disengage clip A from the dashboard, and remove the center panel module.

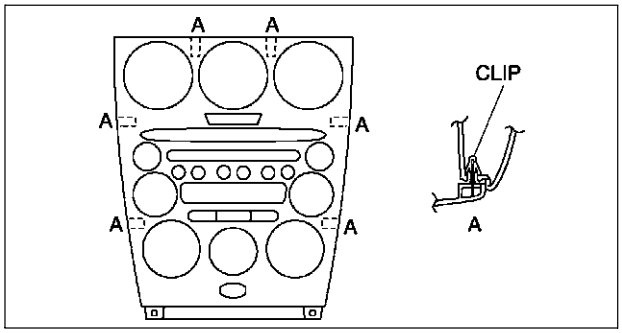

A6E8124W029

CENTER PANEL MODULE DISASSEMBLY/ASSEMBLY

A6E812466900W03

Caution

- **Before disassembling the center panel module, spread a cloth on the floor to put the disassembled parts on. This protects the surface of the panel from scratches or dirt.**

1. Remove the center panel module. (See T–96 CENTER PANEL MODULE REMOVAL/INSTALLATION.)
2. Remove in the order indicated in the table.

1	Screw
2	Audio unit
3	Screw
4	Circuit board (manual A/C only)
5	Cover (upper module)
6	Cover (lower module)
7	Passenger-side air bag cut indicator light bulb
8	Socket
9	Screw
10	Bracket
11	Screw
12	Climate control unit (auto A/C only)
13	Screw
14	Ventilator grille
15	Center panel

3. Install in the reverse order of removal.

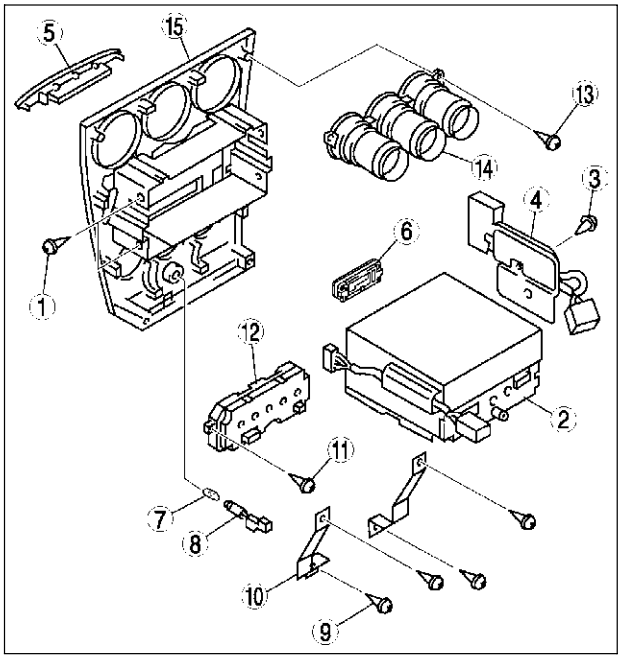

A6E8124W012

T

AUDIO UNIT DISASSEMBLY/ASSEMBLY

A6E812466900W04

1. Remove the audio unit. (See T–97 CENTER PANEL MODULE DISASSEMBLY/ASSEMBLY.)
2. Disassemble in the order indicated in the table.

1	Cover (without upper module)
2	Screw
3	Upper module
4	Screw
5	Lower module
6	Screw
7	Wiring harness
8	Base unit

3. Assemble in the reverse order of disassembly.

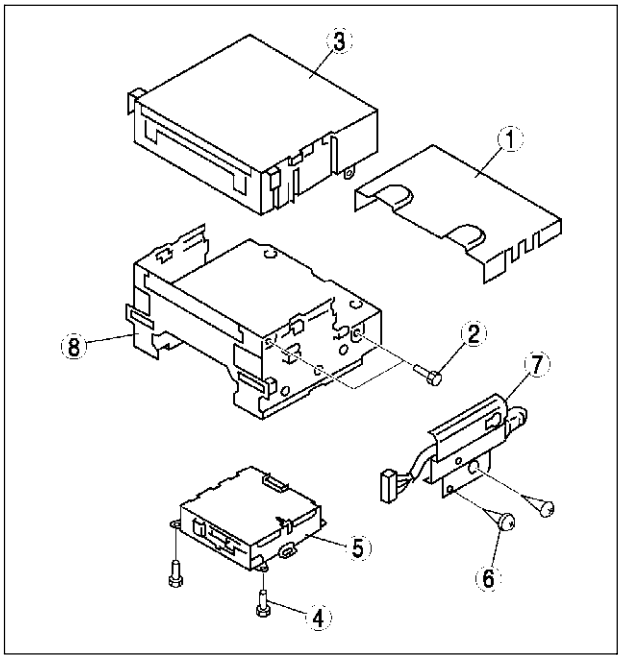

A6E8124W013

CAR-NAVIGATION UNIT REMOVAL/INSTALLATION

A6E812466902W01

1. Disconnect the negative battery cable.
2. Remove the glove compartment.
3. Remove in the order indicated in the table.

1	Bolt
2	Car-navigation unit (See T–98 Car-navigation Unit Installation Note)
3	Connector

4. Install in the reverse order of removal.

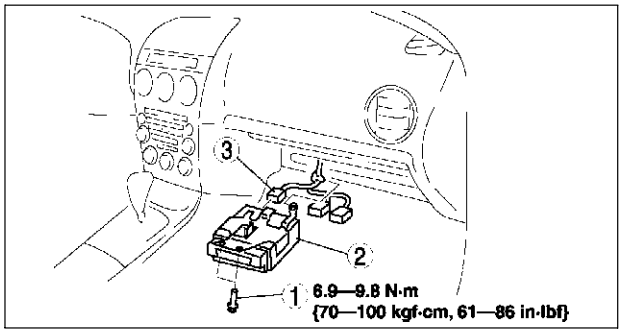

A6E8124W015

Car-navigation Unit Installation Note

1. Insert the car-navigation unit bracket into the dashboard member hole, and with the car-navigation unit fixed in place install the bolt.

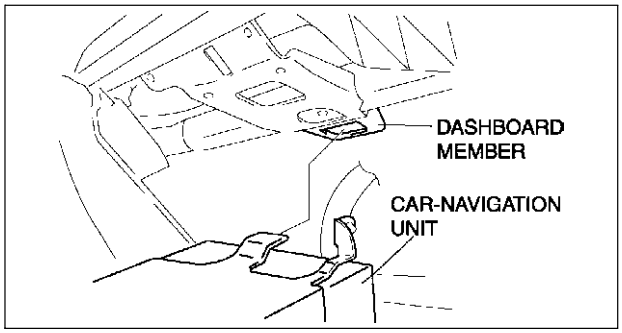

A6E8124W016

LCD UNIT REMOVAL/INSTALLATION

A6E812466902W02

1. Disconnect the negative battery cable.
2. Remove the center panel module. (See T–96 CENTER PANEL MODULE REMOVAL/INSTALLATION.)
3. Remove in the order indicated in the table.

1	Cover
2	Bolt
3	Screw
4	LCD unit (See T–98 LCD Unit Removal Note)
5	Connector

4. Install in the reverse order of removal.

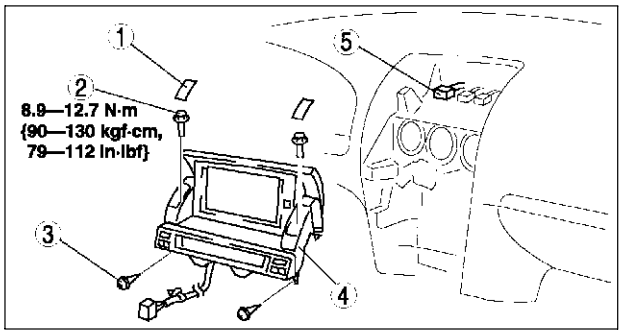

A6E8124W014

LCD Unit Removal Note

1. Pull up the front part of the LCD unit.

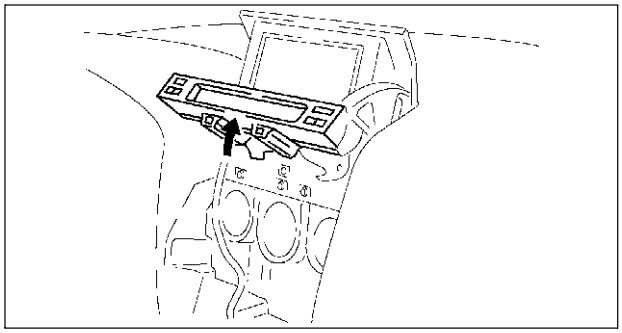

A6E8124W017

2. While pressing down the unit behind the LCD unit, pull the LCD unit out from the dashboard.

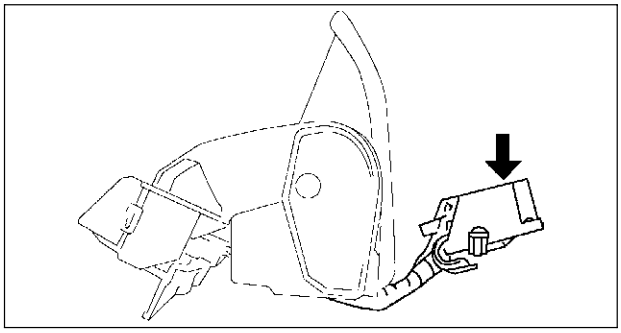

A6E8124W018

AUDIO CONTROL SWITCH REMOVAL/INSTALLATION

A6E812400148W01

Note

- The audio control switch and the cruise control switch use a common connector.

1. Disconnect the negative battery cable.
2. Remove the driver-side air bag module. (See T–120 DRIVER-SIDE AIR BAG MODULE REMOVAL/INSTALLATION.)
3. Remove the steering wheel.
4. Remove in the order indicated in the table.

1	Bolt
2	Bracket
3	Screw
4	Cover
5	Screw
6	Audio control switch/cruise control switch

5. Install in the reverse order of removal.

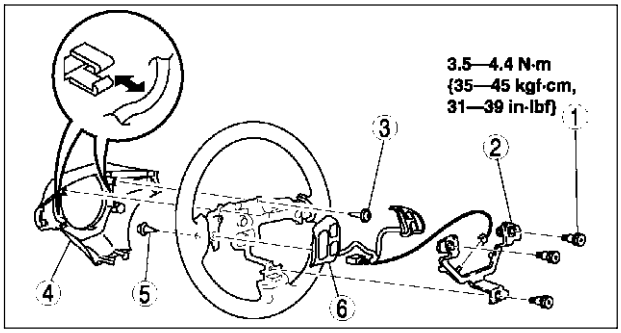

A6E8124W019

T

AUDIO CONTROL SWITCH INSPECTION

A6E812400148W02

1. Disconnect the negative battery cable.
2. Remove the driver-side air bag module. (See T–120 DRIVER-SIDE AIR BAG MODULE REMOVAL/INSTALLATION.)
3. Disconnect the audio control switch connector.
4. Measure the resistance and inspect for continuity between the cruise control switch terminals using an ohmmeter.
   - If not as specified, replace the cruise control switch.

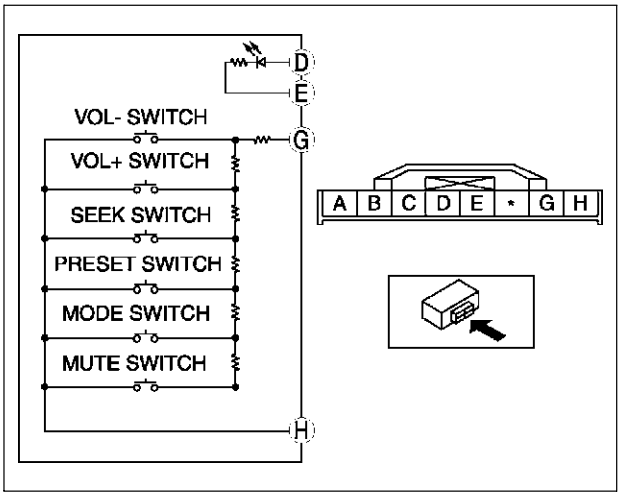

A6E8124W043

○-w-○: Resistance ○-▶|-○: Diode

Switch position	Terminal			
	D	E	G	H
VOL- switch held at on	○-▶|-○		○-w-○ R_1	
VOL+ switch held at on	○-▶|-○		○-w-○ R_2	
SEEK+ switch held at on	○-▶|-○		○-w-○ R_3	
PRESET switch held at on	○-▶|-○		○-w-○ R_4	
MODE switch held at on	○-▶|-○		○-w-○ R_5	
MUTE switch held at on	○-▶|-○		○-w-○ R_6	
Neutral	○-▶|-○		○-w-○ R_7	

R_1: 51—56 ohms R_2: 140—153 ohms
R_3: 287—314 ohms R_4: 535—588 ohms
R_5: 987—1086 ohms R_6: 1.94—2.13 kilohms
R_7: 4.08—5.29 kilohms

A6E8124W028

AUDIO AMPLIFIER REMOVAL/INSTALLATION

A6E812466910W01

1. Disconnect the negative battery cable.
2. Remove in the order indicated in the table.

1	Bolt
2	Connector
3	Audio amplifier

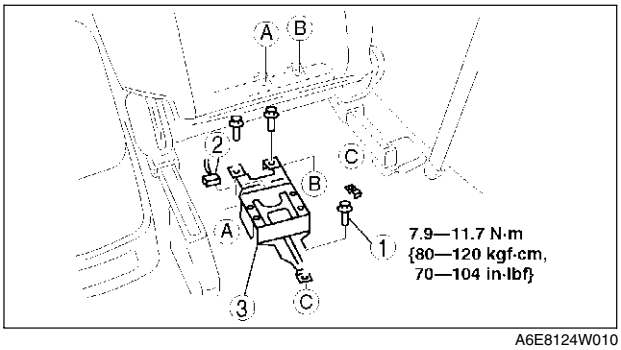

A6E8124W010

3. Install in the reverse order of removal.

FRONT DOOR SPEAKER REMOVAL/INSTALLATION

A6E812466960W01

1. Disconnect the negative battery cable.
2. Remove the front door trim.
3. Remove in the order indicated in the table.

1	Screw
2	Connector
3	Front door speaker (See T–101 Front Door Speaker Installation Note)

4. Install in the reverse order of removal.

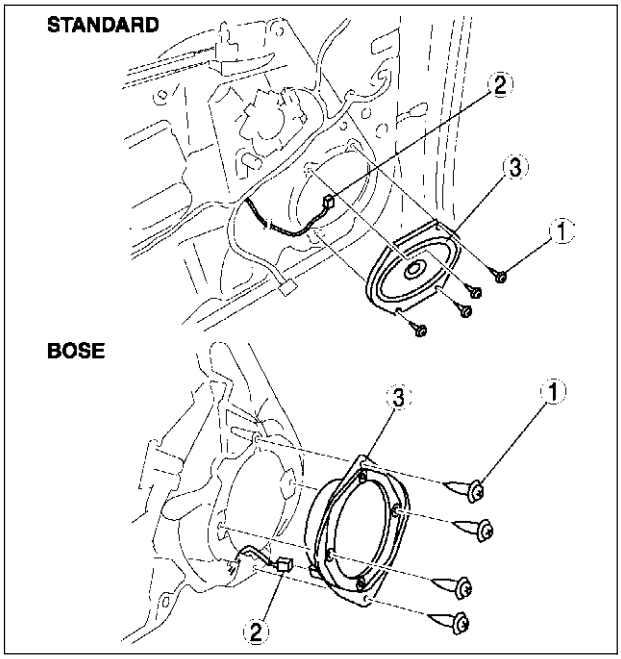

A6E8124W001

Front Door Speaker Installation Note

1. Attach the speaker with the wiring harness placed in the groove of the door unit panel.

Caution

- **If the speaker is attached with the harness placed outside of the groove, the wiring harness might be broken.**

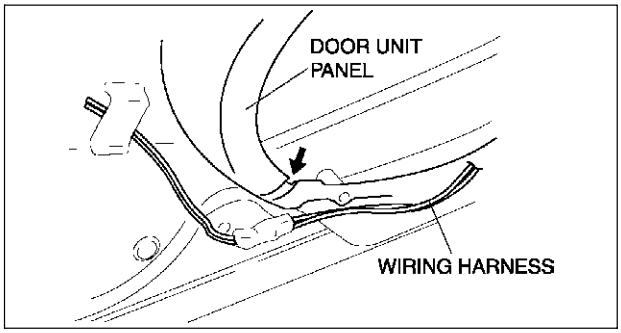

A6E8124W002

FRONT DOOR SPEAKER INSPECTION

A6E812466960W02

1. Inspect for resistance between the front door speaker terminals using an ohmmeter.
   - If not as specified, replace the front door speaker.

: Resistance

Test condition	Terminal	
	A	B
Under any condition		R

R: 4 ohms (standard)
2 ohms (BOSE)

A6E8124W032

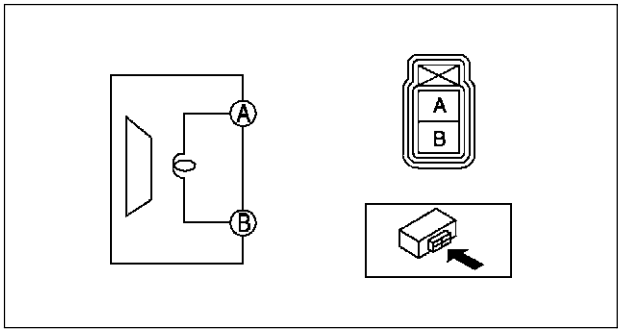

A6E8124W040

2. To verify that the front door speaker outputs sound, apply voltage to the front door speaker and release using a 1.5-V battery.
   - If not outputs sound, replace the front door speaker.

REAR DOOR SPEAKER REMOVAL/INSTALLATION

A6E812466964W01

1. Disconnect the negative battery cable.
2. Remove the rear door trim.
3. Remove in the order indicated in the table.

1	Screw
2	Connector
3	Rear door speaker (See T–102 Rear Door Speaker Installation Note)

4. Install in the reverse order of removal.

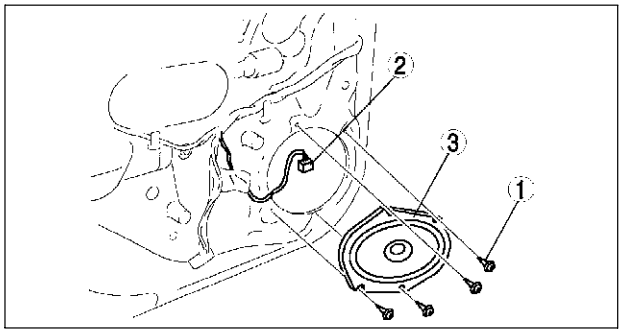

A6E8124W003

Rear Door Speaker Installation Note

1. Attach the speaker with the wiring harness placed in the groove of the door unit panel.

Caution

- **If the speaker is attached with the harness placed outside of the groove, the wiring harness might be broken.**

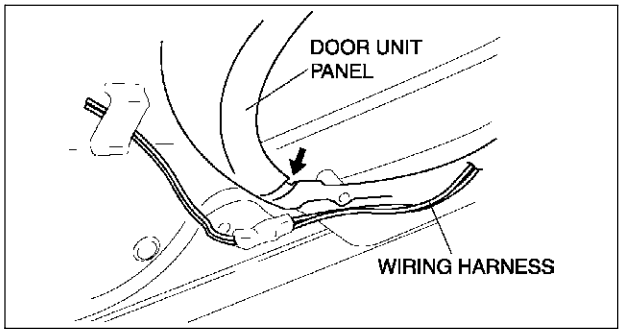

A6E8124W002

REAR DOOR SPEAKER INSPECTION

A6E812466964W02

1. Inspect for resistance between the rear door speaker terminals using an ohmmeter.
   - If not as specified, replace the rear door speaker.

: Resistance

Test condition	Terminal	
	A	B
Under any condition		R

R: 4 ohms (standard)
2 ohms (BOSE)

A6E8124W032

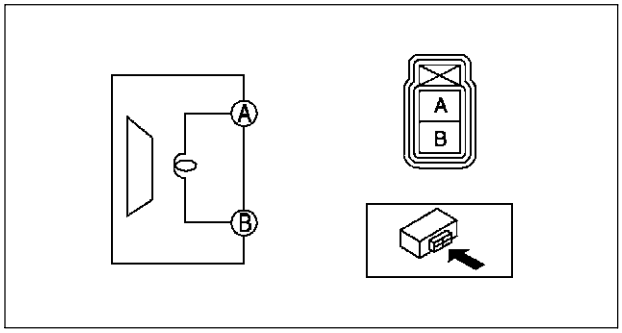

A6E8124W040

2. To verify that the rear door speaker outputs sound, apply voltage to the rear door speaker and release using a 1.5-V battery.
   - If not outputs sound, replace the rear door speaker.

TWEETER REMOVAL/INSTALLATION

A6E812468966W01

1. Disconnect the negative battery cable.
2. Remove in the order indicated in the table.

1	Inner garnish
2	Connector
3	Screw
4	Cover
5	Tweeter

3. Install in the reverse order of removal.

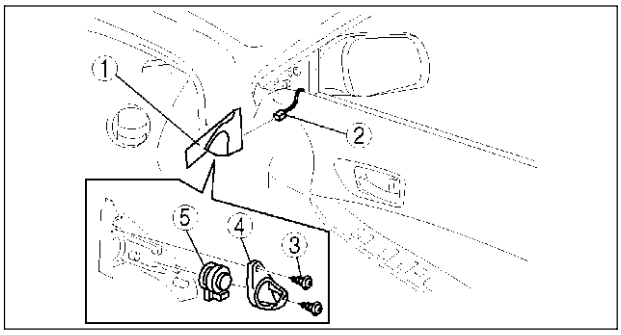

A6E8124W004

TWEETER INSPECTION

A6E812468966W02

1. Inspect for resistance between the tweeter terminals using an ohmmeter.
   - If not as specified, replace the tweeter.

: Resistance

Test condition	Terminal	
	A	B
Under any condition		R

R: 3.2 ohms

A6E8124W033

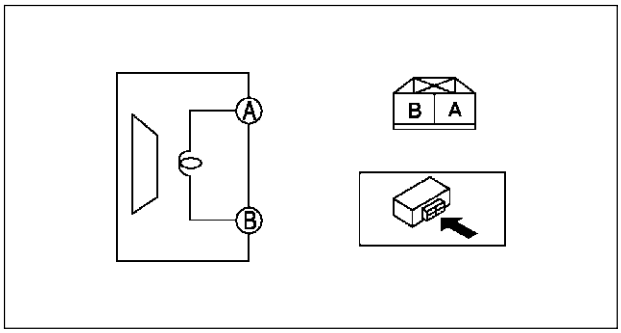

A6E8124W041

2. To verify that the tweeter outputs sound, apply voltage to the tweeter and release using a 1.5-V battery.
   - If not outputs sound, replace the tweeter.

WOOFER REMOVAL/INSTALLATION

A6E812466967W01

4SD

1. Disconnect the negative battery cable.
2. Remove the rear package trim.
3. Remove in the order indicated in the table.

1	Screw
2	Connector
3	Woofer

4. Install in the reverse order of removal.

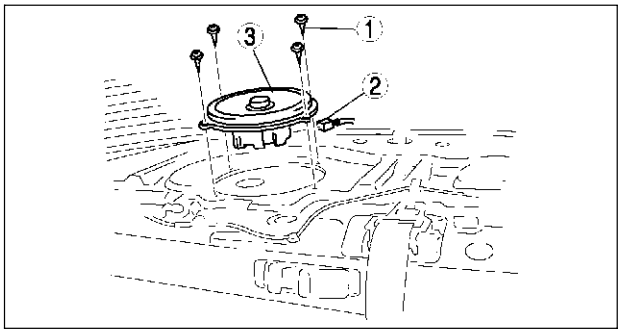

A6E8124W005

T

5HB

1. Disconnect the negative battery cable.
2. Remove in the order indicated in the table.

1	Temporary spare tire cover
2	Wing bolt
3	Connector
4	Woofer

3. Install in the reverse order of removal.

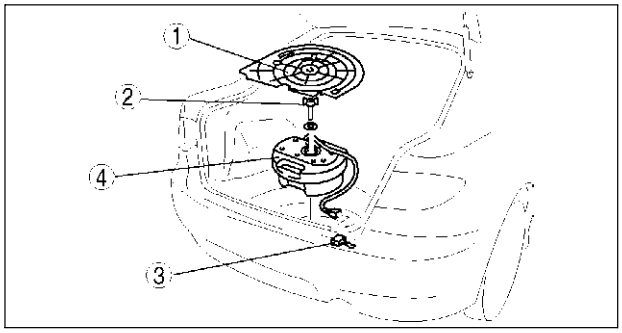

A6E8124W006

WOOFER INSPECTION

A6E812466967W02

1. Inspect for continuity between the audio amplifier connector terminals and woofer connector terminals using an ohmmeter.
   - If not as specified, replace the related wiring harnesses.

○—○: Continuity

Test condition	Terminal			
	Audio amplifier connector		Woofer connector	
	O	P	(E), [G]	(F), [H]
Under any condition	○		○	
			○	○

( ): 5HB [ ]: 4SD

A6E8124W024

2. Verify that there is battery positive voltage at the woofer connector terminal A (4SD) or C (5HB) using a voltmeter.
   - If not as specified, replace the related wiring haness.
3. Inspect continuity between the woofer connector terminal B and body ground using an ohmmeter.
   - If not as specified, replace the related wiring harness.
   - If as specified, replace the woofer.

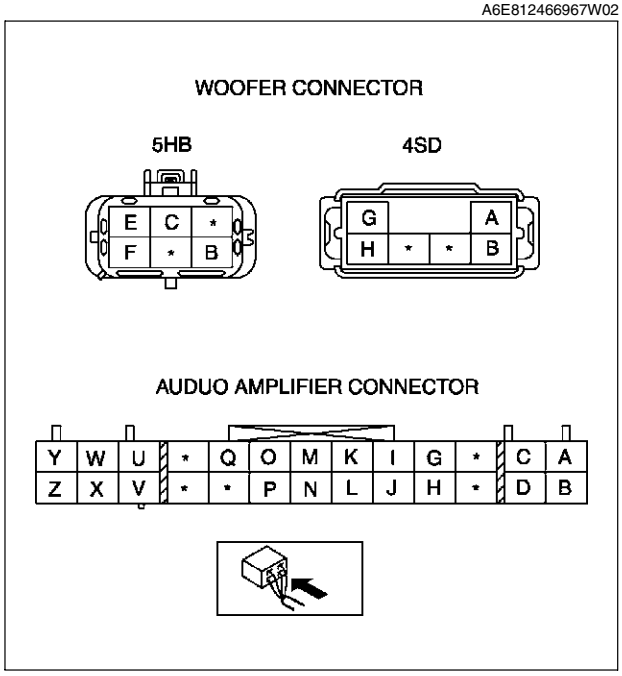

A6E8124W046

NOISE FILTER REMOVAL/INSTALLATION

A6E812466869W01

Brake Light Noise Filter

1. Disconnect the negative battery cable.
2. Remove in the order indicated in the table.

1	Nut
2	Connector
3	Noise filter

3. Install in the reverse order of removal.

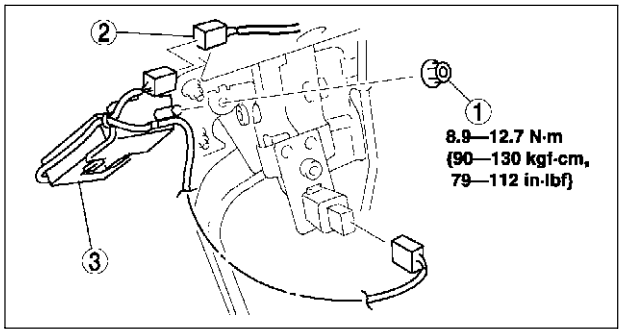

A6E8124W008

Rear Window Defroster Noise Filter

1. Disconnect the negative battery cable.
2. Remove the rear package trim.
3. Remove in the order indicated in the table.

1	Bolt
2	Connector
3	Noise filter

4. Install in the reverse order of removal.

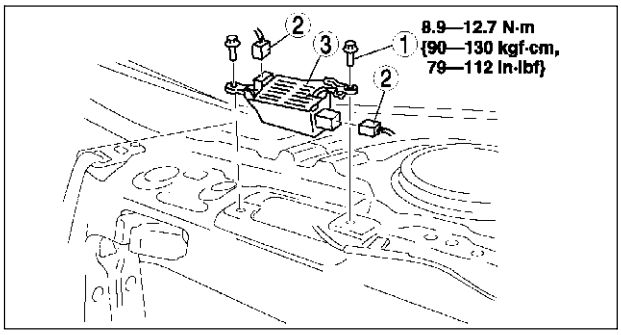

A6E8124W009

NOISE FILTER INSPECTION

A6E812466869W02

Brake Light Noise Filter

1. Inspect for resistance and continuity between the noise filter terminals using an ohmmeter.
   - If not as specified, replace the noise filter.

○-W-○: Resistance ○—○: Continuity

Test condition	Terminal							
	1A	1B	1C	1D	2A	2B	2C	2D
Under any condition	○				○			
		○		R		○		
			○				○	
				R				○

R: 0.1 ohms

A6E8124W035

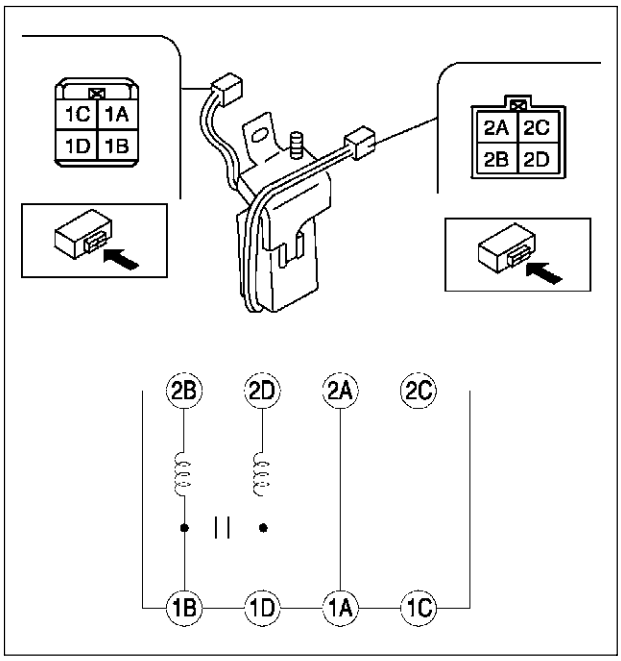

A6E8124W034

T

Rear Window Defroster Noise Filter

1. Inspect for resistance and continuity between the noise filter terminals using an ohmmeter.
   - If not as specified, replace the noise filter.

○-W-○: Resistance

Test condition	Terminal			
	Body GND	1B	2A	2B
Under any condition	○	R ○		
		○	R	○

R: 0.1 ohms

A6E8124W037

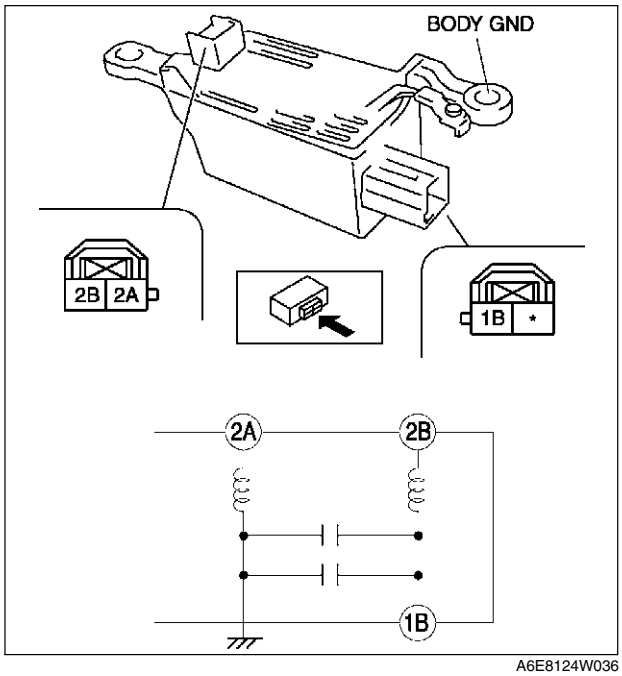

A6E8124W036

CONDENSER REMOVAL/INSTALLATION

A6E812466869W03

4SD

1. Disconnect the negative battery cable.
2. Remove the rear package trim.
3. Remove in the order indicated in the table.

1	Bolt
2	Connector
3	Condenser

4. Install in the reverse order of removal.

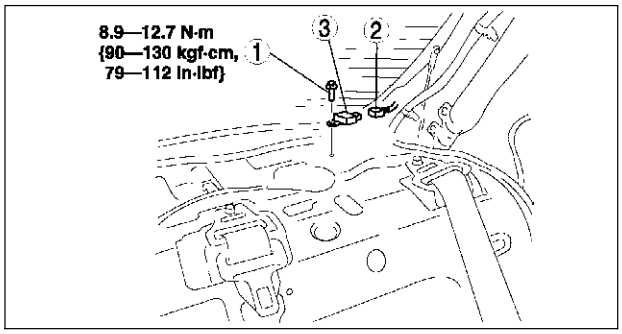

A6E8124W007

5HB

1. Disconnect the negative battery cable.
2. Remove the liftgate lower trim.
3. Remove in the order indicated in the table.

1	Bolt
2	Connector
3	Condenser

4. Install in the reverse order of removal.

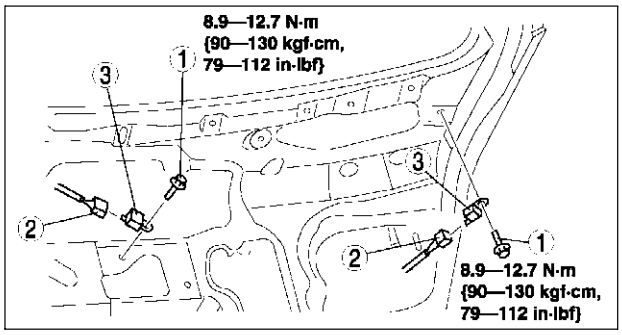

A6E8124W021

CENTER ROOF ANTENNA REMOVAL/INSTALLATION

A6E812466939W01

1. Disconnect the negative battery cable.
2. Remove the headliner. (See S–96 HEADLINER REMOVAL/INSTALLATION.)
3. Remove in the order indicated in the table.

1	Antenna rod
2	Antenna feeder
3	Nut
4	Center roof antenna

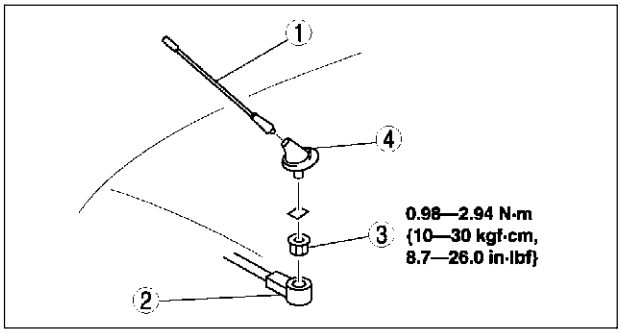

A6E8124W023

4. Install in the reverse order of removal.
5. After installation, verify that the rubber of the center roof antenna is installed to the roof panel with no space between them.

CENTER ROOF ANTENNA INSPECTION

A6E812466939W02

1. Verify that there is no continuity between the center roof antenna terminals A and C using an ohmmeter.
2. Inspect for continuity between the center roof antenna terminals using an ohmmeter.
   - If not as specified, replace the center roof antenna.

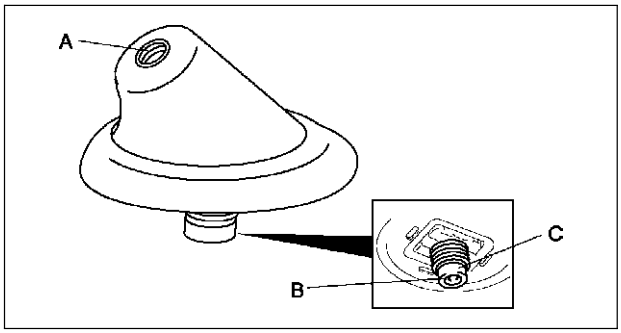

A6E8124W048

○—○: Continuity

Test condition	Terminal	
	A	B
Under any condition	○	○

A6E8124W031

GLASS ANTENNA INSPECTION

A6E812466931W01

1. Inspect the glass antenna for damage visually.
2. Inspect for continuity between the glass antenna terminals using an ohmmeter.
   - If not as specified, repair the glass antenna. (See S–63 FILAMENT REPAIR.)

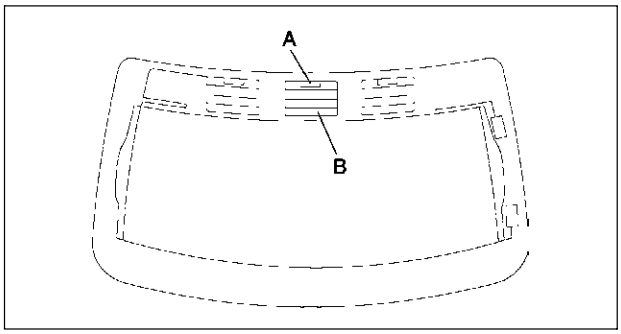

A6E8124W030

○—○: Continuity

Test condition	Terminal	
	A	B
Under any condition	○	○

A6E8124W031

T

GPS ANTENNA REMOVAL/INSTALLATION

A6E812466936W01

1. Disconnect the negative battery cable.
2. Remove the instrument cluster.
3. Remove in the order indicated in the table.

1	Connector
2	GPS antenna

4. Install in the reverse order of removal.

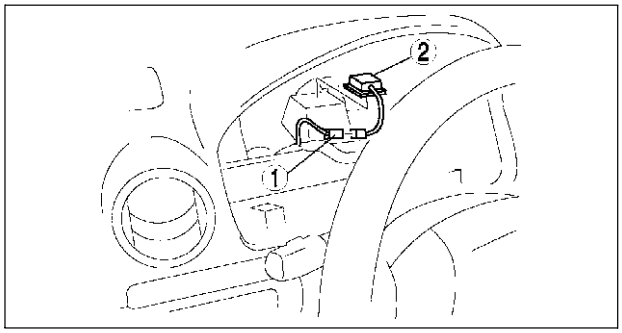

A6E8124W022

ANTENNA FEEDER LOCATION

A6E812466941W01

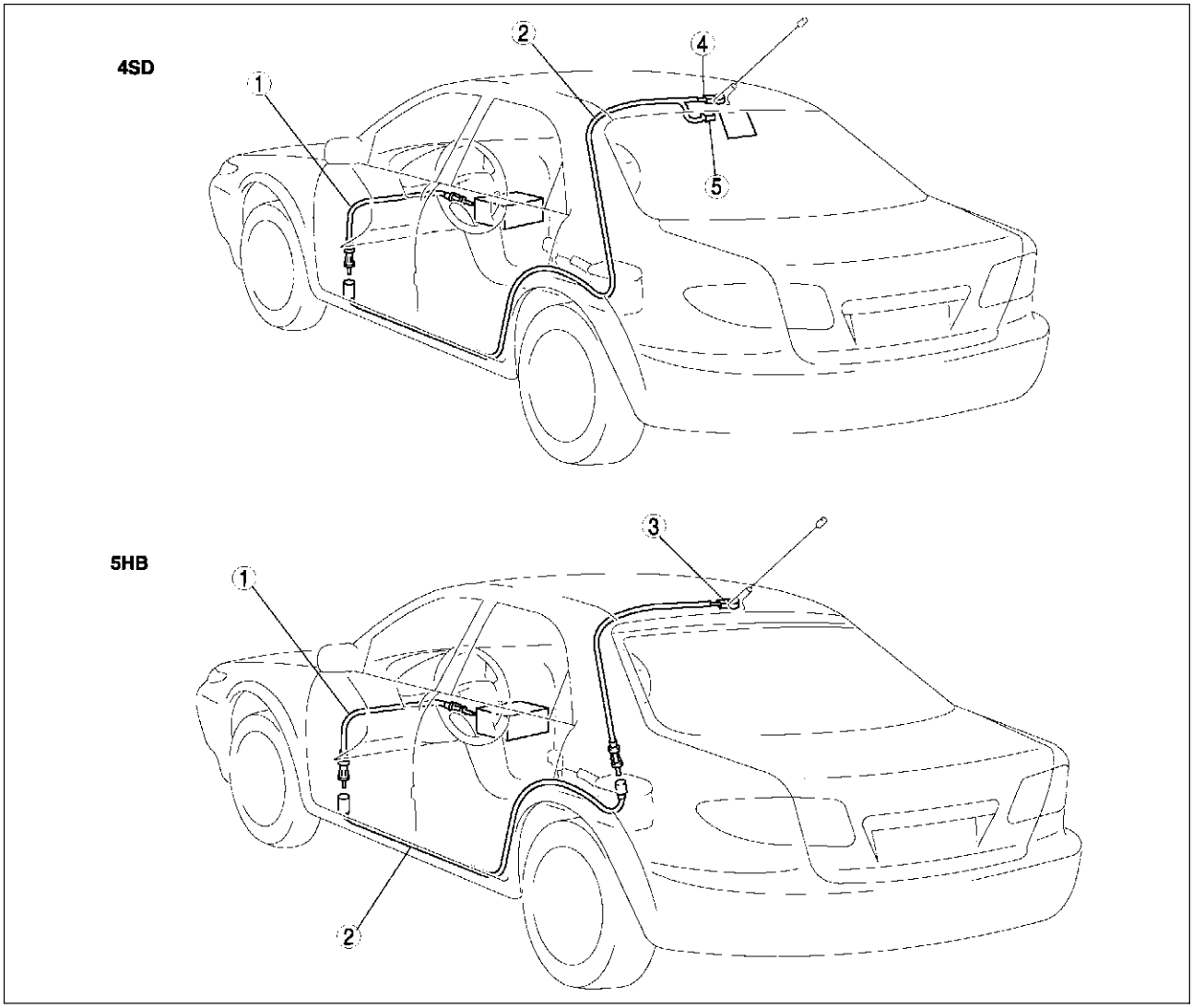

A6E8124W038

1	Front antenna feeder
2	Rear antenna feeder No.1
3	Rear antenna feeder No.2

4	With center roof antenna
5	With glass antenna

FRONT ANTENNA FEEDER INSPECTION

1. Verify that there is no continuity between the front antenna feeder terminals A and B using an ohmmeter.
2. Inspect for continuity between the front antenna feeder terminals using an ohmmeter.
   - If not as specified, replace the instrument panel harness.

A6E812466941W02

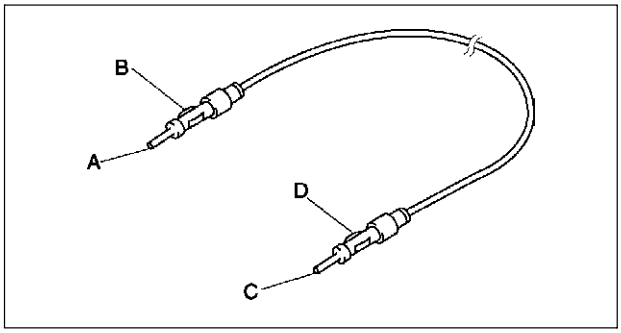

A6E8124W039

○—○ : Continuity

Step	Terminal			
	A	B	C	D
1	○		○	
2		○		○

A6E8124W047

REAR ANTENNA FEEDER INSPECTION

A6E812466942W01

1. Verify that there is no continuity between antenna feeder terminals A and B using an ohmmeter.

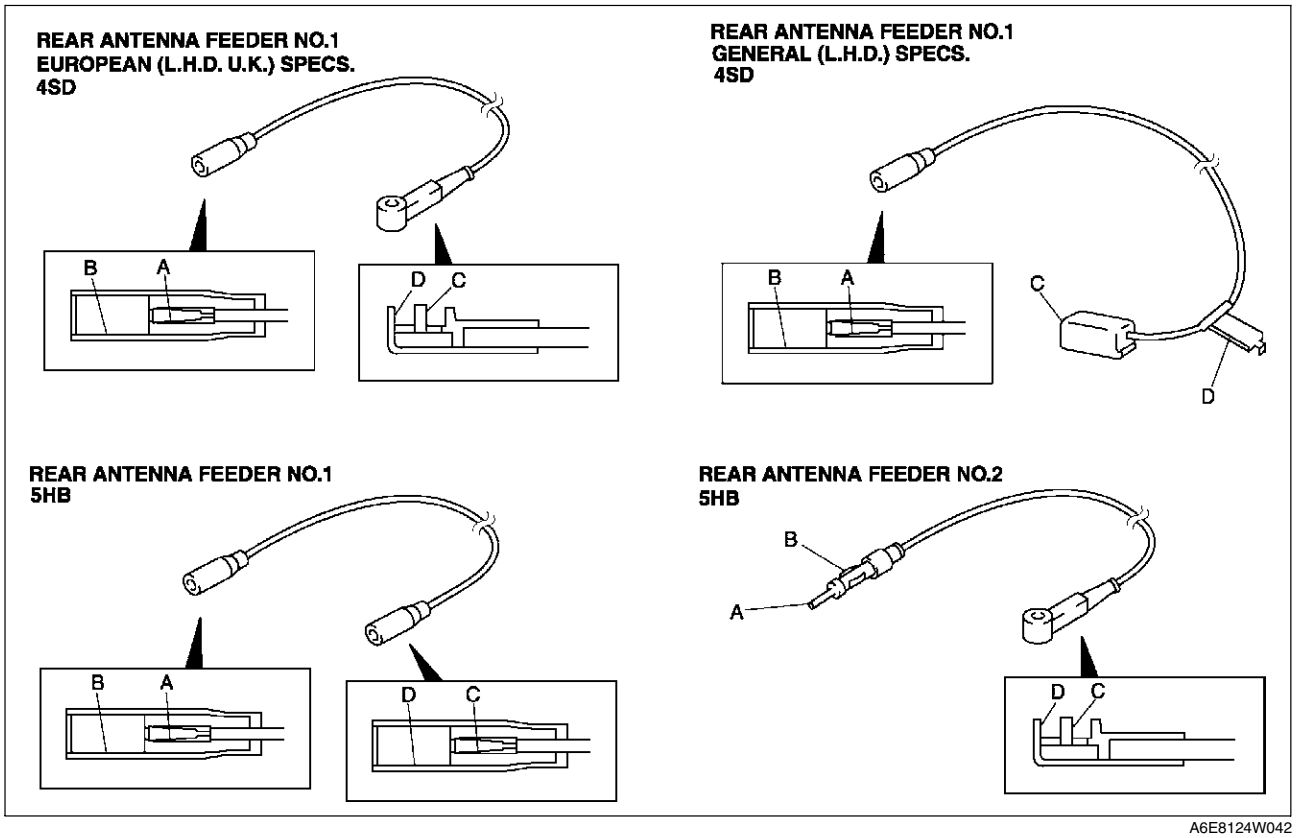

A6E8124W042

2. Inspect for continuity between the antenna feeder terminals using an ohmmeter.
   - If not as specified, replace the rear harness.

○—○ : Continuity

Step	Terminal			
	A	B	C	D
1	○		○	
2		○		○

A6E8124W047

T

CRUISE CONTROL SYSTEM

CRUISE ACTUATOR REMOVAL/INSTALLATION

A6E812866310W01

1. Disconnect the negative battery cable.
2. Remove in the order indicated in the table.

1	Cover (See T–110 Cover Removal Note)
2	Nut
3	Connector
4	Actuator cable (See T–112 ACTUATOR CABLE REMOVAL) (See T–114 ACTUATOR CABLE INSTALLATION)
5	Screw
6	Bracket
7	Cruise actuator

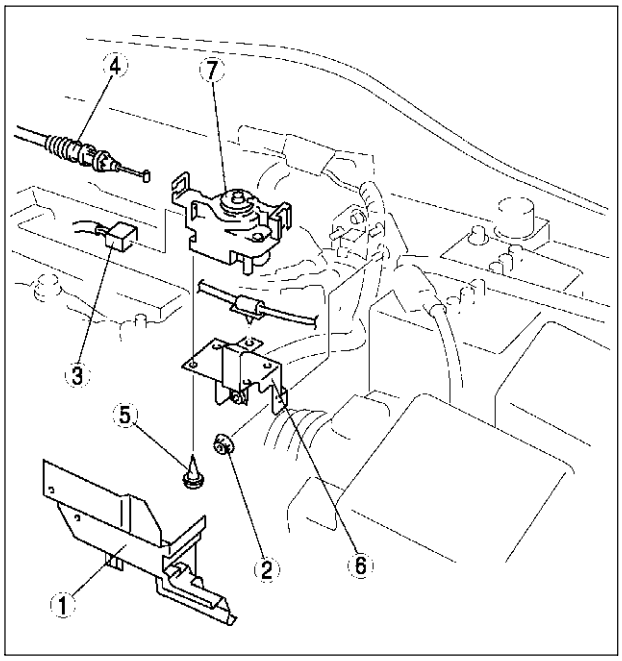

A6E8128W001

3. Install in the reverse order of removal.

Cover Removal Note

1. Unclamp the clips of the heater hoses at the front of the cover.

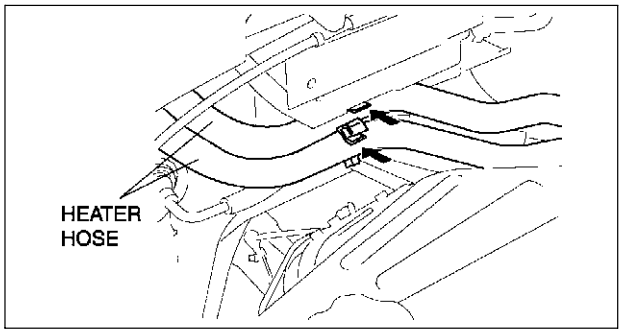

A6E8128W002

CRUISE ACTUATOR INSPECTION

A6E812866310W02

1. Disconnect the cruise actuator connector.
2. Measure the voltage, continuity and resistance at the cruise actuator terminals as indicated below.
   - If not as specified, inspect the parts listed under “Action.”
   - If the parts and wiring harnesses are okay but the system still does not work properly, replace the cruise actuator.

Terminal Voltage Table (Reference)

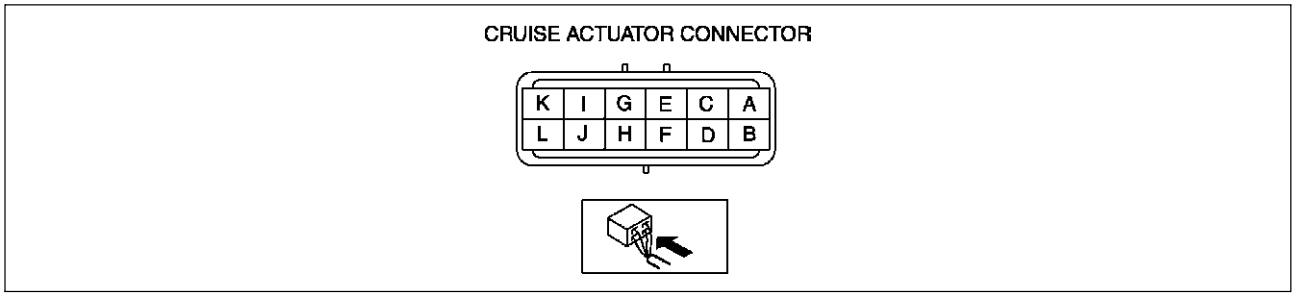

A6E8128W013

Terminal	Signal		Connected to	Test condition		Voltage (V) /Continuity	Action
A	Vehicle speed		• DSC HU/CM (with DSC) • ABS (ABS/ TCS) HU/CM (with ABS (ABS/TCS))	1. Ignition switch at ON position and cruise control main switch held at on. 2. Front tire rotating		Alternates below 1.0 and 5	• Inspect METER IG 15 A fuse • Inspect DSC HU/CM (See P–40 DSC HU/ CM INSPECTION) • Inspect ABS (ABS / TCS) HU/CM (See P–29 ABS (ABS/ TCS) HU/CM INSPECTION) • Inspect related harness
B	—		—	—		—	—
C	Brake switch on/off		Brake switch	Depress brake pedal		B+	• Inspect brake switch (See P–8 BRAKE SWITCH INSPECTION) • Inspect related harness
				Replace brake pedal		Below 1.0	
D	—		—	—		—	—
E	O/D control (ATX only)		PCM	Ignition switch at ON position		B+	• Inspect PCM (See F–45 PCM INSPECTION) • Inspect related harness
F	MTX	Clutch switch on/off	Clutch switch	Inspect for continuity to ground	Depress crutch switch	Yes	• Inspect clutch switch • Inspect related harness
					Other	No	
	ATX	Selector lever position	TR switch	Inspect for continuity to ground	Selector lever at N or P position	Yes	• Inspect TR switch (See K–14 TRANSAXLE RANGE (TR) SWITCH INSPECTION) • Inspect starter • Inspect related harness
					Other	No	
G	Cruise set indicator light output		Cruise set indicator light	Ignition switch at ON position		B+	• Inspect METER IG 15 A fuse • Inspect instrument cluster • Inspect related harness
				Ignition switch at LOCK position or ACC position		Below 1.0	
H	Cruise main indicator light output		Cruise main indicator light	Under any condition: inspect for continuity to ground		Yes	• Inspect instrument cluster • Inspect related harness
I	Cruise actuator ground		GND	Under any condition: inspect for continuity to ground		Yes	• Inspect GND

T

Terminal	Signal	Connected to	Test condition		Voltage (V) /Continuity	Action
J	Cruise control switch position	Cruise control switch	Inspect for resistance	Cruise control main switch held at on	0 ohm	• Inspect cruise control switch (See T–116 CRUISE CONTROL SWITCH INSPECTION) • Inspect related harness
				SET/COAST switch held at on	Approx. 680 ohms	
				RESUME/ ACCEL switch held at on	Approx. 2200 ohms	
				CANCEL switch held at on	Approx. 120 ohms	
K	Brake switch on/off	Brake switch 2	Ignition switch at ON position	Depress brake pedal	Below 1.0	• Inspect brake switch 2 (See P–8 BRAKE SWITCH INSPECTION) • Inspect related harness
				Other	B+	
L	IG1	METER IG 15 A fuse	Ignition switch at ON position		B+	• Inspect METER IG 15 A fuse • Inspect related harness
			Ignition switch at LOCK position or ACC position		Below 1.0	

ACTUATOR CABLE REMOVAL

A6E812866311W01

1. Remove the plug hole plate.
2. Remove the cover from the cruise actuator. (See T–110 CRUISE ACTUATOR REMOVAL/INSTALLATION.)
3. Remove the installation nut and pull the cruise actuator toward you.
4. Move the throttle, and remove the end fitting of the actuator cable from the throttle.
5. Squeeze the hooks of the grommet, and remove the actuator cable.

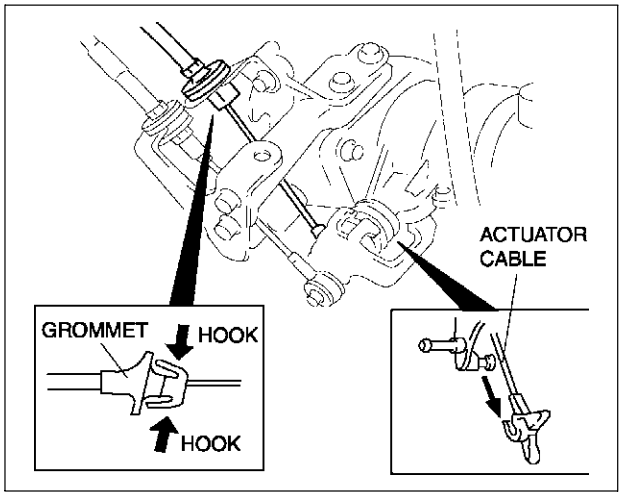

A6E8128W007

6. Remove the actuator cable from the bracket

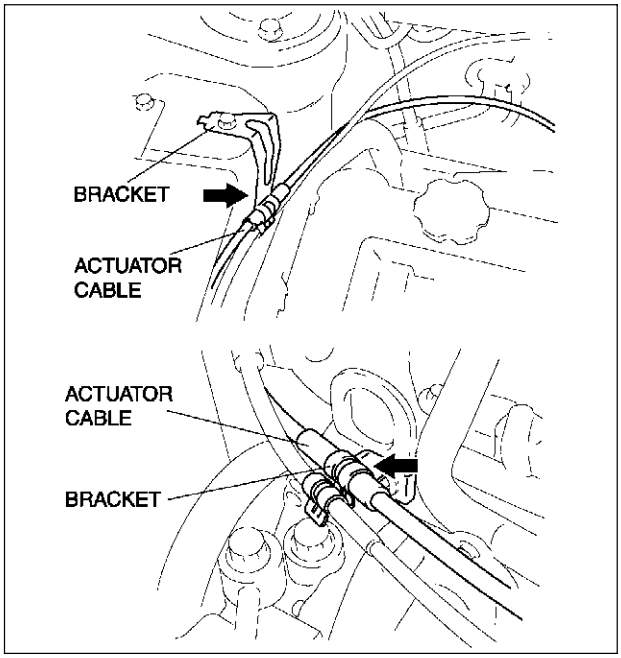

A6E8128W004

7. Remove the end fitting of the actuator cable from the cruise actuator.

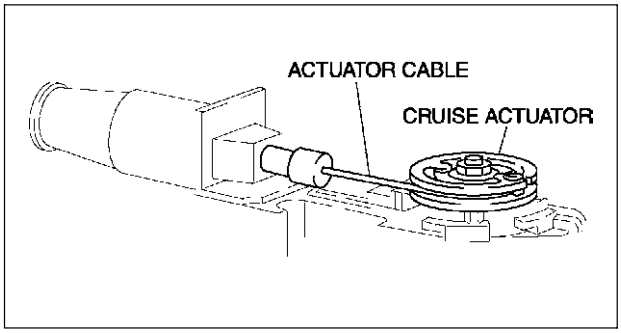

A6E8128W005

8. Squeeze the hooks of the grommet, and remove it from the cruise actuator.
9. Remove the actuator cable.

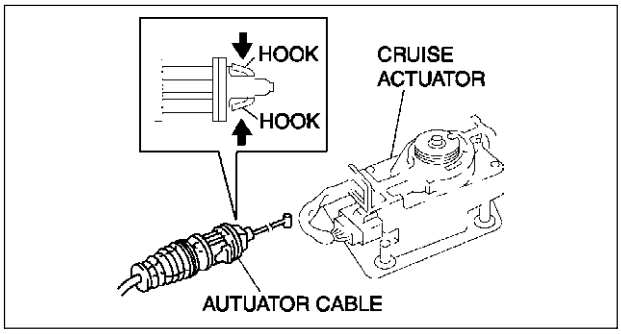

A6E8128W008

T

ACTUATOR CABLE INSTALLATION

A6E812866311W02

1. Slide the lock lever in the direction shown by the arrow to unlock the adjuster.

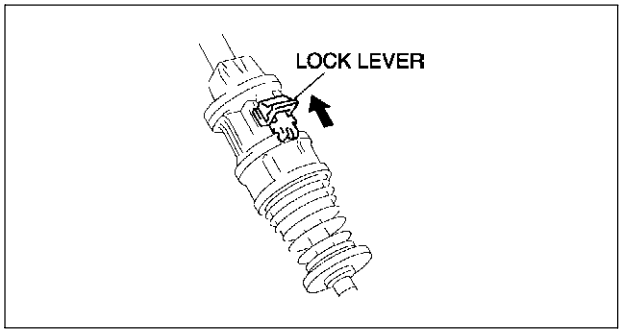

A6E8128W009

2. Turn the ratchet ring to release lock in the direction shown by the arrow.

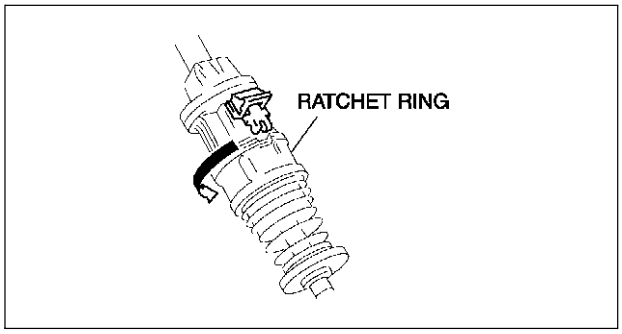

A6E8128W010

3. Install the actuator cable to the cruise actuator.

Caution
- **Due to the possibility of actuator cable damage, make sure there is no twisting in the cable when installing.**

4. Install the cruise actuator. (See T–110 CRUISE ACTUATOR REMOVAL/INSTALLATION.)

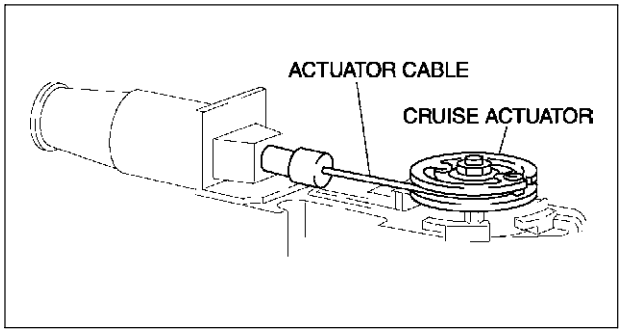

A6E8128W005

5. Pass the actuator cable under the accelerator cable.
6. Install the actuator cable to the bracket.

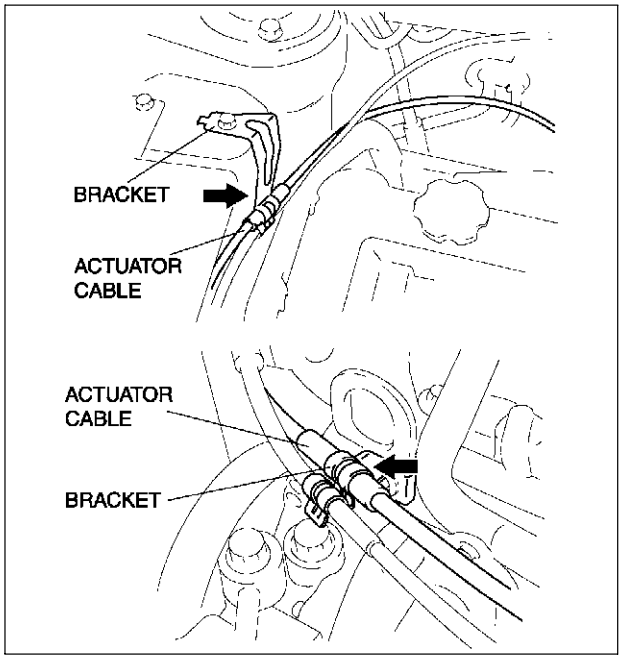

A6E8128W004

7. Install the grommet to the cable bracket.
8. Move the throttle, and install the end fitting of the actuator cable to the throttle.

Caution

- **Due to the possibility of actuator cable damage, make sure there is no twisting in the cable when installing.**

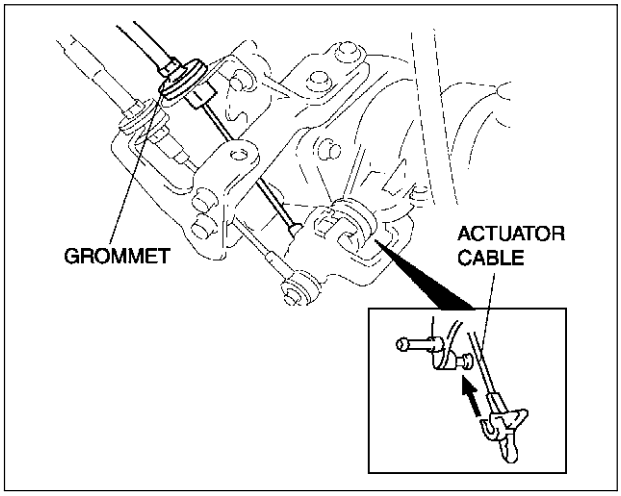

A6E8128W011

9. To adjust the free play, push or pull the actuator cable directly behind the spring **two times**.

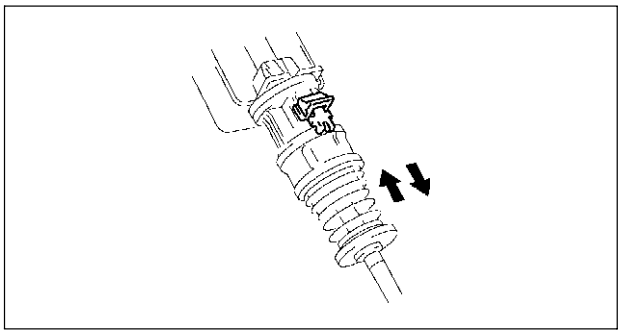

A6E8128W014

10. Turn the ratchet ring in the direction shown by the arrow to lock it.

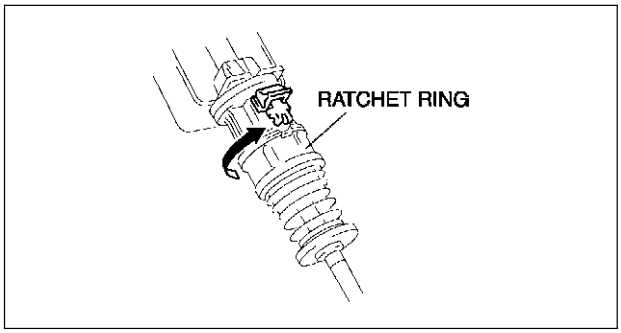

A6E8128W015

11. Slide the lock lever in the direction shown by the arrow to lock the adjuster.
12. Install the cover to the cruise actuator.
13. Install the plug hole plate.

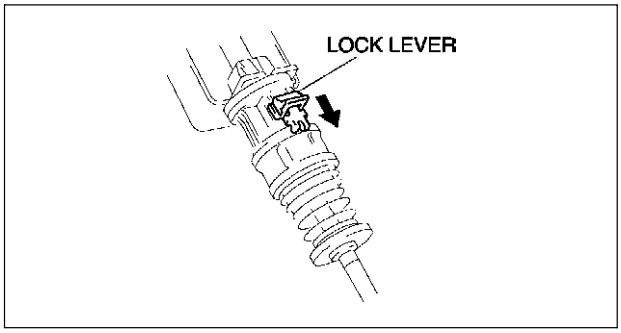

A6E8128W016

CRUISE CONTROL SWITCH REMOVAL/INSTALLATION

A6E812866341W01

Note

- The audio control switch and the cruise control switch use a common connector.

- (See T–99 AUDIO CONTROL SWITCH REMOVAL/INSTALLATION.)

CRUISE CONTROL SWITCH INSPECTION

A6E812866341W02

1. Disconnect the negative battery cable.
2. Remove the driver-side air bag module. (See T–120 DRIVER-SIDE AIR BAG MODULE REMOVAL/INSTALLATION.)
3. Disconnect the cruise control switch connector.
4. Inspect for resistance and continuity between the cruise control switch terminals using an ohmmeter.
   - If not as specified, replace the cruise control switch.

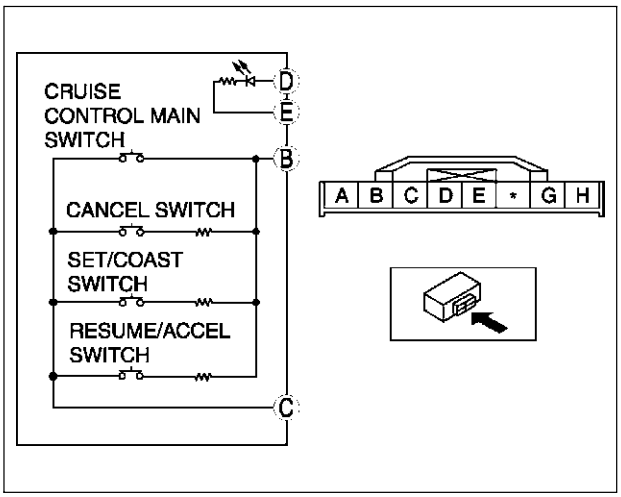

A6E8128W012

○—○: Continuity ○-w-○: Resistance ○-▶|-○: Diode

Switch position	Terminal			
	B	C	D	E
Cruise control main switch held at on	○—○		○-▶|-○	
CANCEL switch held at on	○-w-○ R_1		○-▶|-○	
SET/COAST switch held at on	○-w-○ R_2		○-▶|-○	
RESUME/ACCEL switch held at on	○-w-○ R_3		○-▶|-○	
Neutral			○-▶|-○	

R_1: 120—122 ohms R_2: 677—693 ohms
R_3: 2.16—2.24 kilohms

A6E8128W006

AIR BAG SYSTEM

SERVICE WARNINGS

A6E813001046W01

Component Disassembly

- **Disassembling and reassembling the components of the air bag system can render the system inoperative, which may result in serious injury or death in the event of an accident. Do not disassemble any air bag system components.**

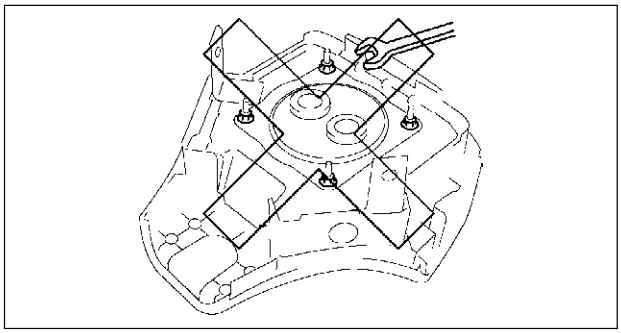

A6E8130W044

Wiring Harness Repair

- **Incorrectly repairing an air bag system wiring harness can accidentally deploy the air bag module or pre-tensioner seat belt, which can cause serious injury. If a problem is found in the system wiring, replace the wiring harness. Do not try to repair it.**

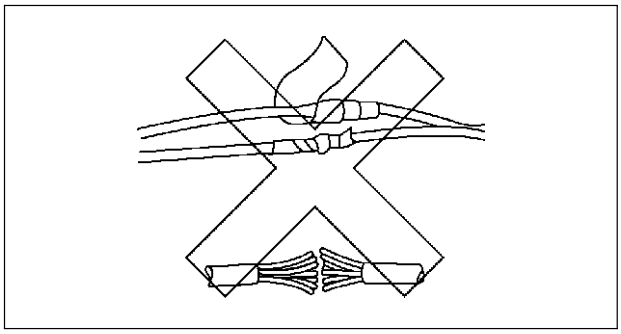

A6E8130W045

Air Bag Module Inspection

- **Inspecting an air bag module using an ohmmeter can deploy the air bag module, which may cause serious injury. Do not use an ohmmeter to inspect an air bag module. Always use the on-board diagnostic to diagnose the air bag module for malfunctions.**

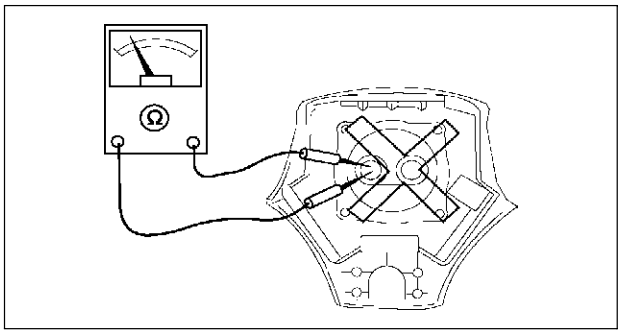

A6E8130W024

Air Bag Module Handling

- **A live (undeployed) air bag module may accidentally deploy when it is handled and cause serious injury. When carrying a live (undeployed) air bag module, point the front surface away from your body to lessen the chance of injury in case it deploys.**

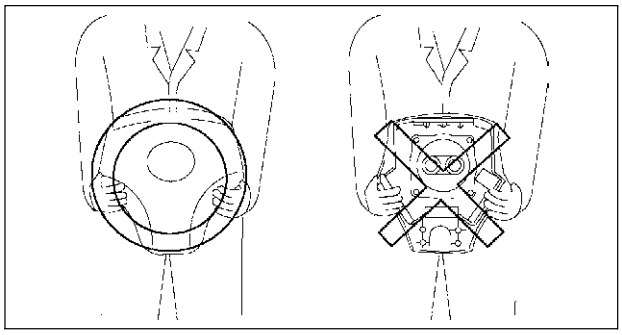

A6E8130W022

- **A live (undeployed) air bag module placed face down on a surface is dangerous. If the air bag module deploys, the motion of the module can cause serious injury. Always face the front surface up to reduce the motion of the module in case it accidentally deploys.**

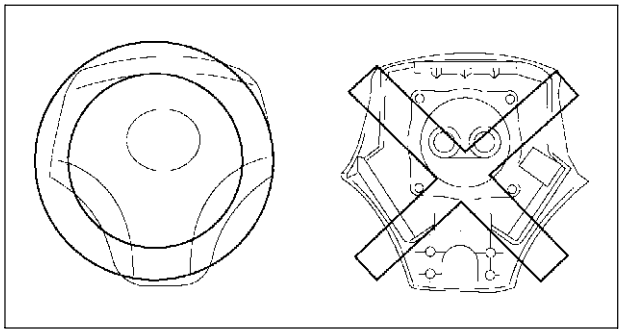

A6E8130W021

Side Air Bag Module Handling

- **When the side air bag module deploys due to a collision, the interior of the seat back (pad, frame, etc.) may become damaged. If the seat back is reused and the side air bag module does not deploy properly, a serious accident may result. When the side air bag module deploys, always replace both the side air bag module and the seat back (pad, frame, trim) with new parts. After service, confirm that the seat operates normally and that the harness is positioned properly.**

SAS Unit Handling

- **Disconnecting the SAS unit connector or removing the SAS unit with the ignition switch at ON position can cause the air bag modules to deploy, which may seriously injure you. Before disconnecting the SAS unit connector or removing the SAS unit, turn the ignition switch to LOCK position, then disconnect the negative battery cable and wait for more than 1 minute to allow the backup power supply of the SAS unit to deplete its stored power.**
- **Connecting the SAS unit connector without firmly installing the SAS unit to the vehicle is dangerous. The crash sensor inside the control module may send an electrical signal to the air bag modules. This will deploy the air bag modules, which may result in serious injury. Therefore, before connecting the connector, firmly mount the control module to the vehicle.**
- **For vehicles with a single point sensor, once an air bag module is deployed due to an accident or other causes, the SAS unit must be replaced with a new one even if the used one does not have any external signs of damage. The used SAS unit may have been damaged internally which may cause improper operation, resulting in major injuries or even death. The used single point SAS unit cannot be bench-checked or self-checked.**

Crash Zone Sensor Handling

- **Disconnecting the crash zone sensor connector or removing the crash zone sensor with the ignition switch at ON position can cause the crash zone sensor to operate and the air bag modules and pre-tensioner seat belts to deploy, which may seriously injure you. Before disconnecting the crash zone sensor connector or removing the crash zone sensor, always turn the ignition switch to LOCK position, then disconnect the negative battery cable and wait for more than 1 minute to allow the backup power supply of the SAS control module to deplete its stored power.**
- **If the crash zone sensor is subjected to shock or the sensor is disassembled, the air bag modules and pre-tensioner seat belts may operate (deploy) suddenly and cause injury, or it may fail to operate normally and cause a serious accident. Do not subject the crash zone sensor to shock or disassemble the sensor.**
- **Because a sensor is built into the crash zone sensor, when the air bag modules and pre-tensioner seat belts operates (deploys), there may be a problem, such as an internal malfunction, even if there is not any external damage or deformation. If the crash zone sensor is reused, the air bag modules and pre-tensioner seat belts may fail to operate normally and cause a serious injury. Always replace the crash zone sensor with a new part. The crash zone sensor cannot be bench-checked or self-checked.**

Side Air Bag Sensor Handling

- **Disconnecting the side air bag sensor connector or removing the side air bag sensor with the ignition switch at ON position can cause the side air bag sensor to operate and the side air bag module to deploy, which may seriously injure you. Before disconnecting the side air bag sensor connector or removing the side air bag sensor, always turn the ignition switch to LOCK position, then disconnect the negative battery cable and wait for more than 1 minute to allow the backup power supply of the SAS control module to deplete its stored power.**
- **If the side air bag sensor is subjected to shock or the sensor is disassembled, the side air bag module may operate (deploy) suddenly and cause injury, or it may fail to operate normally and cause a serious accident. Do not subject the side air bag sensor to shock or disassemble the sensor.**
- **Because a sensor is built into the side air bag sensor, when the side air bag module operates (deploys), there may be a problem, such as an internal malfunction, even if there is not any external damage or deformation. If the side air bag sensor is reused, the side air bag module may fail to operate normally and cause a serious injury. Always replace the side air bag sensor with a new part. The side air bag sensor cannot be bench-checked or self-checked.**

Pre-tensioner Seat Belt Inspection

- **Inspecting a pre-tensioner seat belt using an ohmmeter can deploy the pre-tensioner seat belt, which can cause serious injury. Do not use an ohmmeter to inspect the pre-tensioner seat belt. Always use the on-board diagnostic to diagnose the pre-tensioner seat belt for malfunctions.**

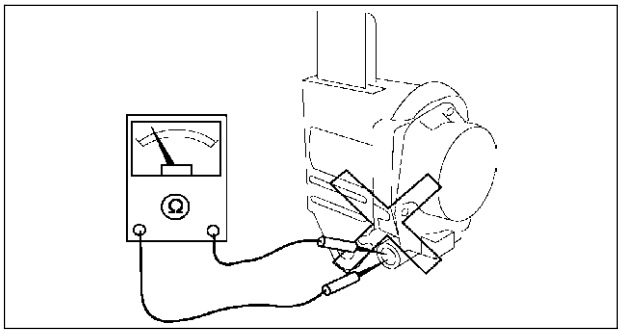

A6E8130W025

Component Handling

- **Oil, grease, water, etc on components may cause the air bag modules and pre-tensioner seat belts to fall to deploy in an accident, which may cause serious injury. Do not allow oil, grease, water, etc., on components.**
- **Inserting a screwdriver, etc., into the connector of an air bag module or a pre-tensioner seat belt may damage the connector and cause the air bag module or the pre-tensioner seat belt to deploy improperly, which may cause serious injury. Do not insert any foreign objects into the connector.**

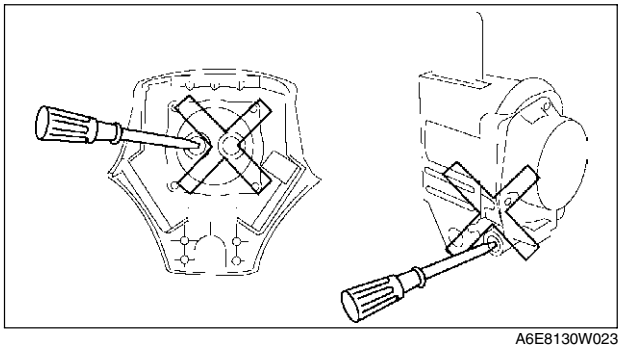
A6E8130W023

Component Reuse

- **Even if an air bag module or a pre-tensioner seat belt does not deploy in a collision and does not have any external signs of damage, it may have been damaged internally, which may cause improper operation. Improper operation may cause serious injury. Always self-check the undamaged air bag module or pre-tensioner seat belt to determine whether it can be reused.**

T

DRIVER-SIDE AIR BAG MODULE REMOVAL/INSTALLATION

A6E813057010W01

Warning

- **Handling the air bag module improperly can accidentally deploy the air bag module, which may seriously injure you. Read AIR BAG SYSTEM SERVICE WARNINGS before handling the air bag module. (See T–117 SERVICE WARNINGS.)**
- **Due to the adoption of 2-step deployment control in both the driver-side air bag module, depending on the impact force, it is possible that inflator No. 2 might not deploy. In such cases, before disposing of the air bag module, make sure to follow the inflator deployment procedures and verify complete deployment of inflator No. 1 and 2.**

1. Turn the ignition switch to LOCK position.
2. Disconnect the negative battery cable and wait for **more than 1 minute**.
3. Remove in the order indicated in the table.

1	Cover
2	Bolt
3	Connector (See T–120 Connector Removal Note)
4	Driver-side air bag module

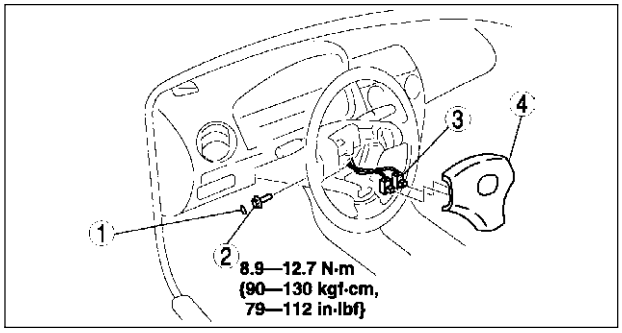

A6E8130W001

4. Install in the reverse order of removal.
5. Turn the ignition switch to ON position.
6. Verify that the air bag system warning light illuminates for **approximately 6 seconds** and then goes off.
   - If the air bag system warning light does not operate in the manner described above, there are malfunctions in the system. Inspect the system using the on-board diagnostic.

Connector Removal Note

1. Using a flathead screwdriver, pry out the connector's stopper plate.
2. Disconnect the connector.

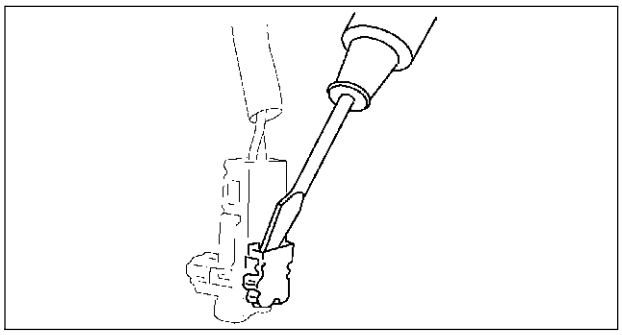

A6E8130W002

PASSENGER-SIDE AIR BAG MODULE REMOVAL/INSTALLATION

A6E813057050W01

Warning

- **Handling the air bag module improperly can accidentally deploy the air bag module, which may seriously injure you. Read AIR BAG SYSTEM SERVICE WARNINGS before handling the air bag module. (See T–117 SERVICE WARNINGS.)**
- **Due to the adoption of 2-step deployment control in both the passenger-side air bag module, depending on the impact force, it is possible that inflator No. 2 might not deploy. In such cases, before disposing of the air bag module, make sure to follow the inflator deployment procedures and verify complete deployment of inflator No. 1 and 2.**

1. Turn the ignition switch to LOCK position.
2. Disconnect the negative battery cable and wait for **more than 1 minute**.
3. Remove the glove compartment.
4. Remove in the order indicated in the table.

1	Connector (See T–121 Connector Removal Note)
2	Bolt
3	Passenger-side air bag module

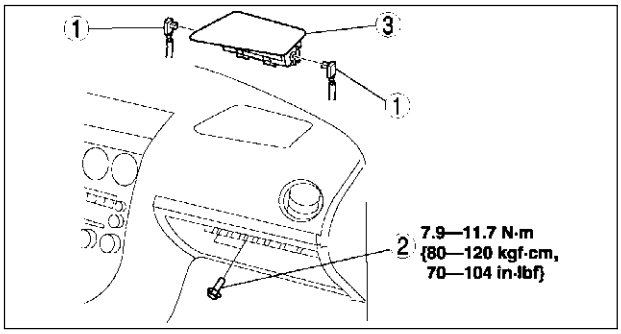

A6E8130W003

5. Install in the reverse order of removal.
6. Turn the ignition switch to ON position.
7. Verify that the air bag system warning light illuminates for **approximately 6 seconds** and then goes off.
   - If the air bag system warning light does not operate in the manner described above, there are malfunctions in the system. Inspect the system using the on-board diagnostic.

Connector Removal Note

1. Using a flathead screwdriver, pry out the connector's stopper plate.
2. Disconnect the connector.

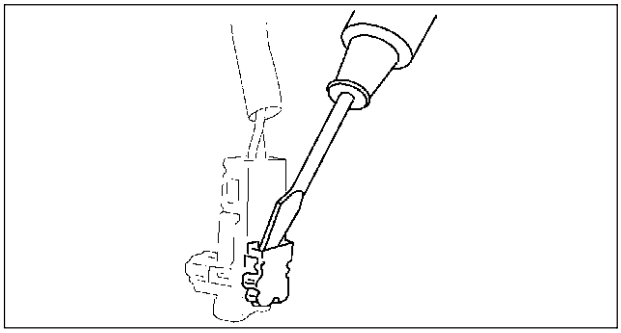

A6E8130W002

SIDE AIR BAG MODULE REMOVAL/INSTALLATION

A6E813000147W01

Warning

- **Handling the air bag module improperly can accidentally deploy the air bag module, which may seriously injure you. Read AIR BAG SYSTEM SERVICE WARNINGS before handling the air bag module. (See T–117 SERVICE WARNINGS.)**

Warning

- **If the side air bag module is installed with debris in the seat back, the foreign material may be scattered when the side air bag module operates (deploys), causing injury. Verify that there is no foreign material in the seat back before installing the side air bag module.**

1. Remove in the order indicated in the table.

1	Cover
2	Bolt
3	Connector (See T–122 Connector Removal Note)
4	Side air bag module

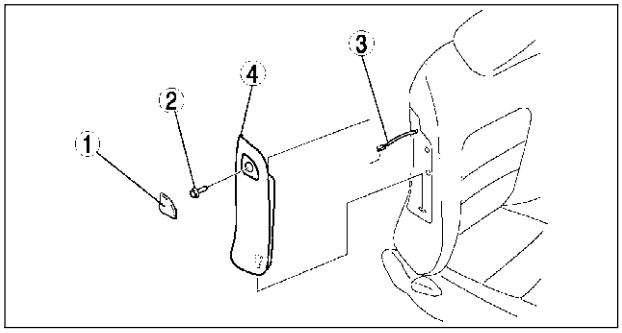

A6E8130W004

2. Install in the reverse order of removal.
3. Turn the ignition switch to ON position.
4. Verify that the air bag system warning light illuminates for **approximately 6 seconds** and then goes off.
   - If the air bag system warning light does not operate in the manner described above, there are malfunctions in the system. Inspect the system using the on-board diagnostic.

Connector Removal Note

1. Using a flathead screwdriver, pry out the connector's stopper plate.
2. Disconnect the connector.

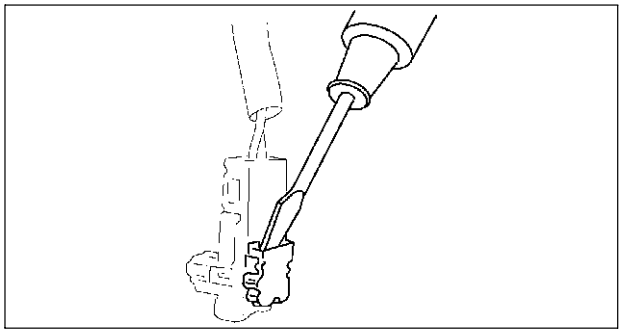
A6E8130W002

CURTAIN AIR BAG MODULE REMOVAL/INSTALLATION

A6E813000171W01

Warning

- **Handling the air bag module improperly can accidentally deploy the air bag module, which may seriously injure you. Read AIR BAG SYSTEM SERVICE WARNINGS before handling the air bag module. (See T–117 SERVICE WARNINGS.)**

1. Turn the ignition switch to LOCK position.
2. Disconnect the negative battery cable and wait for **more than 1 minute**.
3. Remove the headliner.
4. Remove in the order indicated in the table.
5. Install in the reverse order of removal.
6. Turn the ignition switch to ON position.
7. Verify that the air bag system warning light illuminates for **approximately 6 seconds** and then goes off.
   - If the air bag system warning light does not operate in the manner described above, there are malfunctions in the system. Inspect the system using the on-board diagnostic.

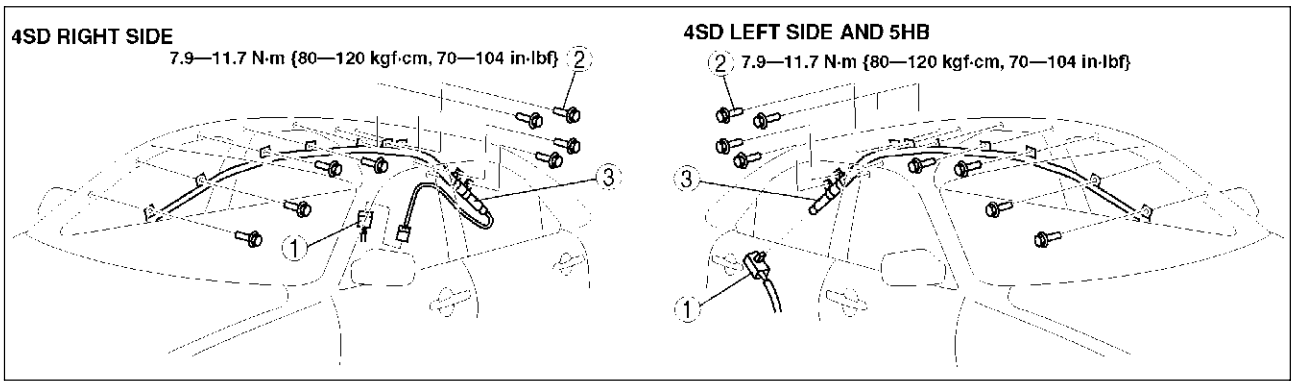

A6E8130W026

1	Connector (See T–123 Connector Removal Note)
2	Bolt

3	Curtain air bag module (See T–123 Curtain Air Bag Module Installation Note (4SD Right Side))

Connector Removal Note

1. Using a flathead screwdriver, pry out the connector's stopper plate.
2. Disconnect the connector.

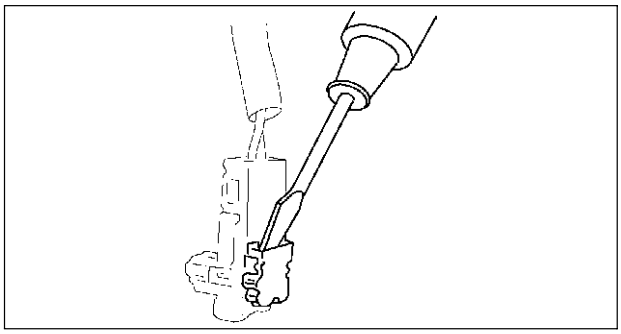

A6E8130W002

Curtain Air Bag Module Installation Note (4SD Right Side)

1. Pass the curtain air bag module harness through the hole in the body.

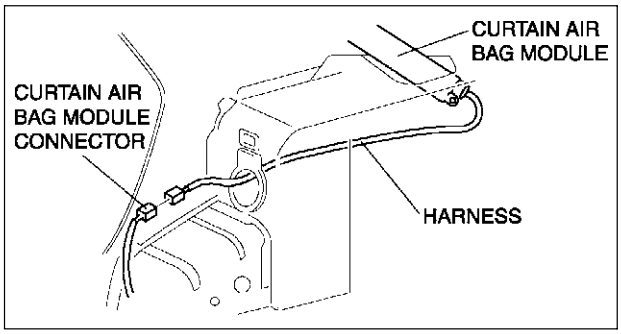

A6E8130W056

CRASH ZONE SENSOR REMOVAL/INSTALLATION

A6E813000145W01

Warning

- **Handling the crash zone sensor improperly can accidentally deploy the air bag module and pre-tensioner seat belt, which may seriously injure you. Read AIR BAG SYSTEM SERVICE WARNINGS before handling the crash zone sensor. (See T–117 SERVICE WARNINGS.)**

1. Turn the ignition switch to LOCK position.
2. Disconnect the negative battery cable and wait for **more than 1 minute**.
3. Remove the radiator grille.
4. Remove in the order indicated in the table.

1	Bolt
2	Cover
3	Bolt
4	Connector
5	Crash zone sensor

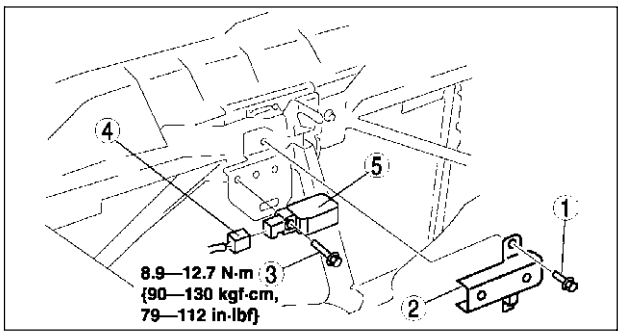

A6E8130W007

5. Install in the reverse order of removal.
6. Turn the ignition switch to ON position.
7. Verify that the air bag system warning light illuminates for **approximately 6 seconds** and then goes off.
   - If the air bag system warning light does not operate in the manner described above, there are malfunctions in the system. Inspect the system using the on-board diagnostic function.

SIDE AIR BAG SENSOR REMOVAL/INSTALLATION

A6E813000146W01

Warning

- **Handling the side air bag sensor improperly can accidentally deploy the side air bag module, which may seriously injure you. Read AIR BAG SYSTEM SERVICE WARNINGS before handling the side air bag sensor. (See T–117 SERVICE WARNINGS.)**

1. Turn the ignition switch to LOCK position.
2. Disconnect the negative battery cable and wait for **more than 1 minute**.
3. Remove the B-pillar lower trim.

4. Remove in the order indicated in the table.

1	Bolt
2	Connector
3	Side air bag sensor

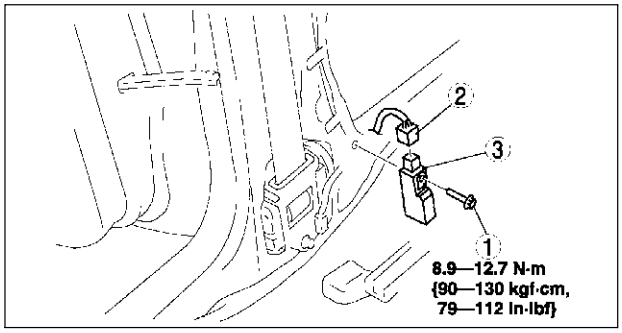

A6E8130W005

5. Install in the reverse order of removal.
6. Turn the ignition switch to ON position.
7. Verify that the air bag system warning light illuminates for **approximately 6 seconds** and then goes off.
   - If the air bag system warning light does not operate in the manner described above, there are malfunctions in the system. Inspect the system using the on-board diagnostic function.

SAS UNIT REMOVAL/INSTALLATION

A6E813057030W01

Warning

- **Handling the SAS unit improperly can accidentally deploy the air bag modules and pre-tensioner seat belt, which may seriously injure you. Read AIR BAG SYSTEM SERVICE WARNINGS before handling the SAS unit. (See T–117 SERVICE WARNINGS.)**

Caution

- **When replacing the SAS unit, configuration procedure must be done before removing the SAS unit. If configuration is not completed before removing the SAS unit, DTC B1921 will detected.**

1. Configurate the SAS unit (when only replacing it). (See T–124 SAS UNIT CONFIGURATION.)
2. Turn the ignition switch to LOCK position.
3. Disconnect the negative battery cable and wait for **more than 1 minute**.
4. Partially peel off the floor covering.
5. Remove in the order indicated in the table.

1	Bolt
2	Connector
3	SAS unit

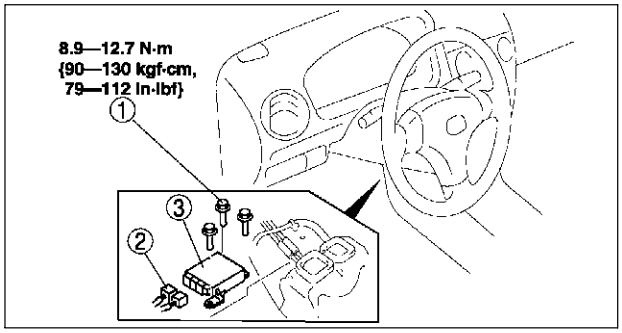

A6E8130W006

6. Install in the reverse order of removal.
7. Turn the ignition switch to ON position.
8. Verify that the air bag system warning light illuminates for **approximately 6 seconds** and then goes off.
   - If the air bag system warning light does not operate in the manner described above, there are malfunctions in the system. Inspect the system using the on-board diagnostic.

SAS UNIT CONFIGURATION

A6E813057030W02

1. Connect the **SST** (WDS or equivalent) to the DLC-2.
2. Input vehicle information following the directions on the screen.
3. Select “Module programming”.
4. Select “Programmable module installation”.
5. Select the following items and perform procedures according to directions on the screen.

Items

- **“RCM”**

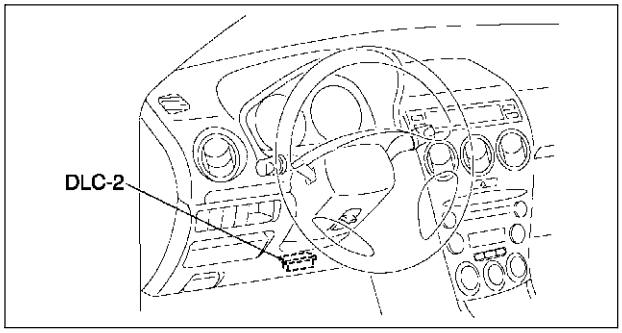

A6E3970W002

6. Retrieve DTCs by the **SST** (WDS or equivalent), then verify that there is no DTC present.
   - If DTC is present, perform applicable DTC inspection.

CLOCK SPRING REMOVAL/INSTALLATION

A6E813066123W01

1. Disconnect the negative battery cable.
2. Remove the driver-side air bag module. (See T–120 DRIVER-SIDE AIR BAG MODULE REMOVAL/INSTALLATION.)
3. Remove the steering wheel. (See N–7 STEERING WHEEL AND COLUMN REMOVAL/INSTALLATION.)
4. Remove the column cover.
5. Remove in the order indicated in the table.

1	Screw
2	Connector
3	Clock spring (See T–125 Clock Spring Installation Note)

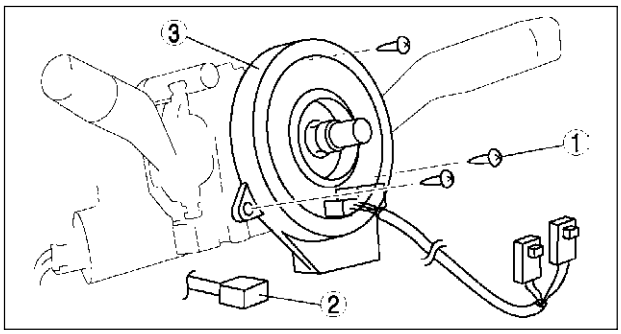

A6E8130W008

6. Install in the reverse order of removal.
7. Verify that the air bag system warning light illuminates for **approximately 6 seconds** and then goes off.
   - If the air bag system warning light does not operate in the manner described above, there are malfunctions in the system. Inspect the system using the on-board diagnostic.

Clock Spring Installation Note

Caution

- **If the clock spring is not adjusted, the spring wire in the clock spring will break due to overtension when the steering wheel is turned. Always adjust the clock spring after installing it.**

- Adjust the clock spring after installing it. (See T–125 CLOCK SPRING ADJUSTMENT.)

CLOCK SPRING ADJUSTMENT

A6E813066123W02

Note

- The adjustment procedure is also specified on the caution label of the clock spring.

1. Set the front wheels straight ahead.

Caution

- **The clock spring will break if over-wound. Do not forcibly turn the clock spring.**

2. Turn the clock spring clockwise until it stops.

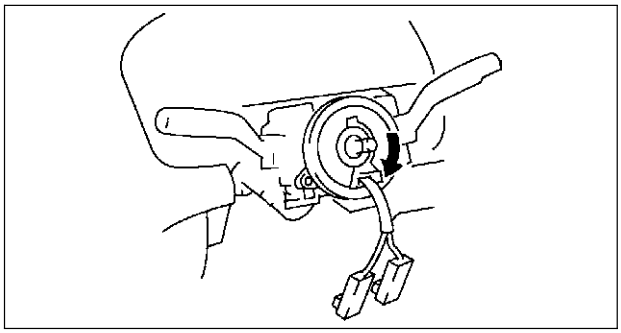
A6E8130W046

3. Turn the clock spring counterclockwise **2 3/4 turns**.

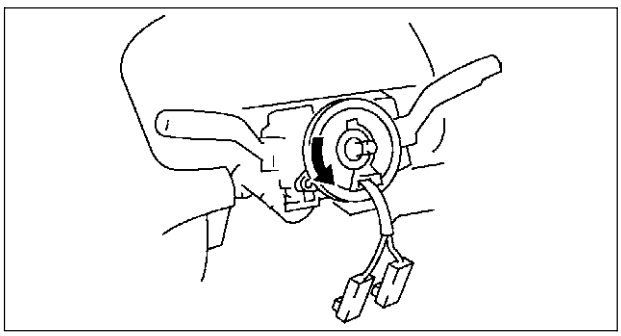
A6E8130W047

4. Align the mark on the clock spring with the mark on the outer housing.

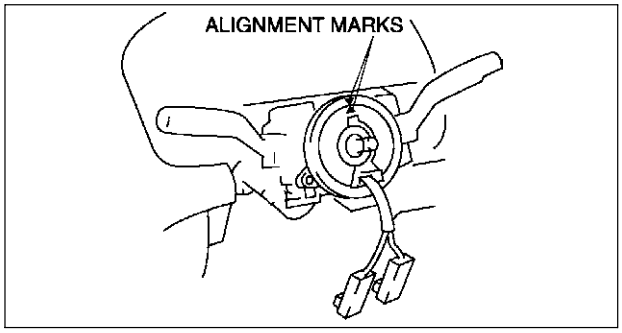

A6E8130W048

CLOCK SPRING INSPECTION

A6E813066123W03

1. Remove the clock spring.
2. Inspect for continuity between the clock spring terminals using an ohmmeter.
   - If not as specified, replace the clock spring.

○—○: Continuity

Test condition	Terminal																				
	1A	1B	1C	1D	2A	2B	2C	2D	2E	2G	2H	3A	3B	4A	4B	5A	5B	5C	5D	5E	5G	5H
Under any condition	○	○												○	○							
			○	○								○	○									
					○	○										○	○					
							○	○										○	○			
									○	○										○	○	
											○											○

A6E8130W009

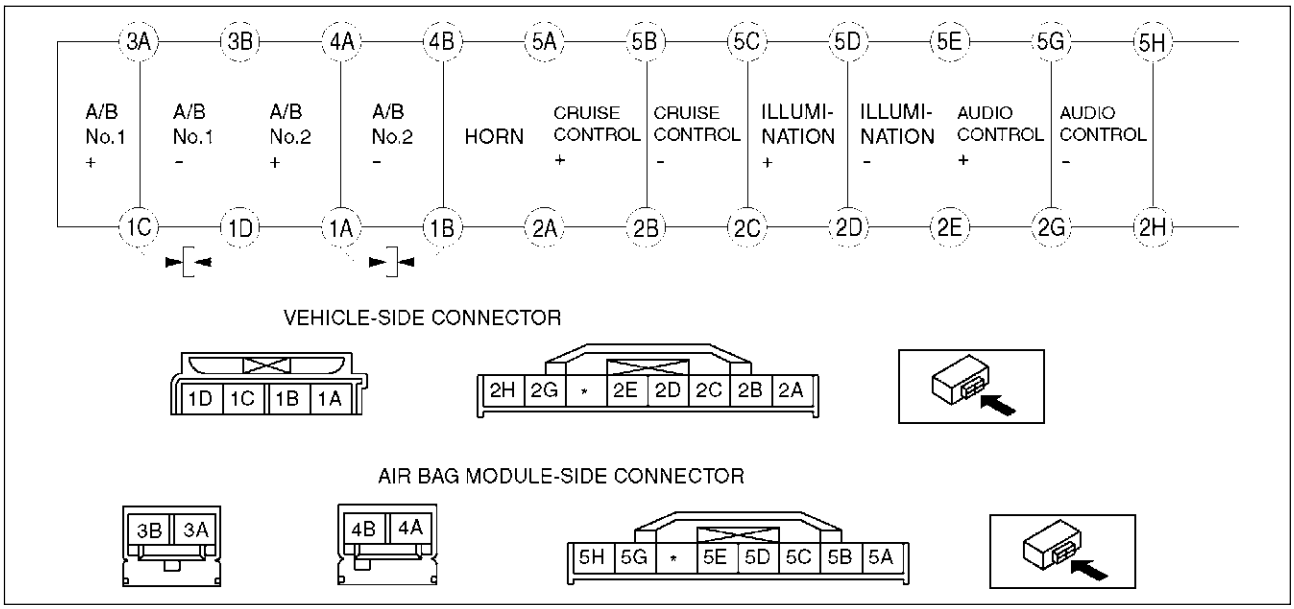

A6E8130W010

Note

- When the vehicle-side connector of clock spring is disconnected, the terminals 1A,1B, 1C and 1D are shorted to prevent unexpected deployment of the air bag module. When it is connected, the terminals are open.

PASSENGER-SIDE AIR BAG CUT-OFF INDICATOR LIGHT REMOVAL/INSTALLATION

A6E813001046W02

1. Remove the center panel module. (See T–96 CENTER PANEL MODULE REMOVAL/INSTALLATION.)
2. Remove in the order indicated in the table.

1	Socket
2	Passenger-side air bag cut-off indicator light bulb

3. Install in the reverse order of removal.

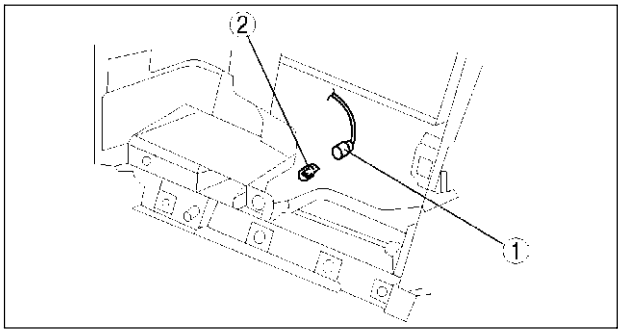

A6E8130W057

AIR BAG MODULE AND PRE-TENSIONER SEAT BELT DEPLOYMENT PROCEDURES

A6E813057000W01

Warning

- **A live (undeployed) air bag module and pre-tensioner seat belt may accidentally deploy when it is disposed of and cause serious injury. Do not dispose of a live (undeployed) air bag module and pre-tensioner seat belt. If the SSTs (Deployment tool and Adapter harness) are not available, consult the nearest Mazda representative for assistance.**

Caution

- **Deploying the air bag modules and pre-tensioner seat belts inside the vehicle may cause damage to the vehicle interior. When the vehicle is not to be scrapped, always deploy the air bag modules and pre-tensioner seat belts outside the vehicle.**

- When the vehicle is to be scrapped, deploy the air bag modules and pre-tensioner seat belts inside the vehicle. (See T–127 Deployment Procedure for Inside of Vehicle (Only When Vehicle Is To Be Scrapped).)
- When the vehicle is not to be scrapped, deploy the air bag modules and pre-tensioner seat belts outside the vehicle. (See T–131 Deployment Procedure for Outside of Vehicle.)

Note

- When disposing of deployed air bag module and pre-tensioner seat belt, refer to the disposal procedure, (See T–139 AIR BAG MODULE AND PRE-TENSIONER SEAT BELT DISPOSAL PROCEDURES.)

Deployment Procedure for Inside of Vehicle (Only When Vehicle Is To Be Scrapped)

1. Inspect the **SST** (Deployment tool). (See T–140 INSPECTION OF SST (DEPLOYMENT TOOL).)
2. Move the vehicle to an open space, away from strong winds, and close all of the vehicle's doors and windows.
3. Turn the ignition switch to LOCK position.
4. Disconnect the negative battery cable and wait for **more than 1 minute**.
5. Follow the appropriate procedure for deploying the driver-side air bag module, passenger-side air bag module, side air bag module, curtain air bag module, or pre-tensioner seat belt.

Driver-side air bag module

Warning

- **Driver-side air bag module is the dual inflator type. When the inflators are forced to be deployed simultaneously, one of them may fail to deploy. When disposing the air bag module, the inflators may be deployed accidentally. Make sure to deploy the inflators sequentially, following the procedures below.**

1. Remove the driver-side air bag module. (See T–120 DRIVER-SIDE AIR BAG MODULE REMOVAL/INSTALLATION.)

2. Connect the SST (Adapter harness) to the driver-side air bag module as shown in the figure.
3. Install the driver-side air bag module. (See T–120 DRIVER-SIDE AIR BAG MODULE REMOVAL/INSTALLATION.)

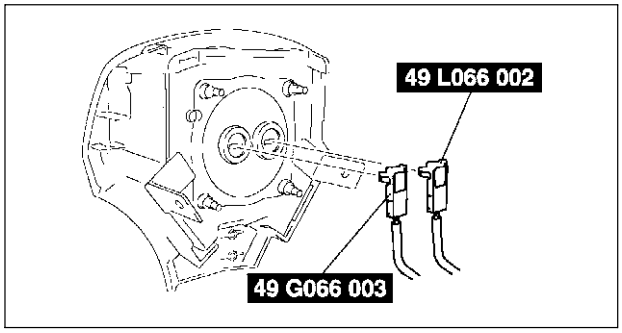

A6E8130W011

4. Connect the **SST** (Deployment tool) to the SST (Adapter harness).
5. Connect the red clip of the **SST** (Deployment tool) to the positive battery terminal and the black clip to the negative battery terminal.
6. Verify that the red light on the **SST** (Deployment tool) is illuminated.
7. Make sure all persons are standing **at least 6 m {20 ft}** away from the vehicle.

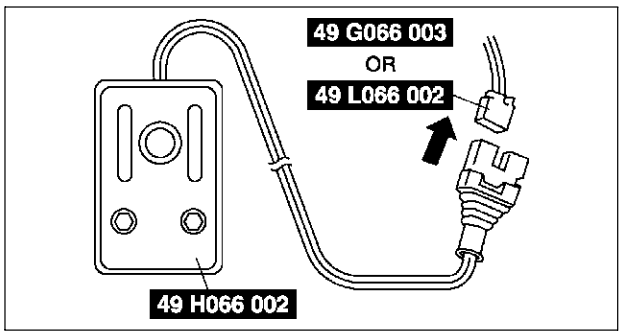

A6E8130W050

8. Press the activation switch on the **SST** (Deployment tool) to deploy the driver-side air bag module.
9. Disconnect the **SST** (Deployment tool) from the **SST** (Adapter harness).
10. Connect the **SST** (Deployment tool) to the **SST** (Adapter harness).
11. Perform steps 5 through 8, in order to deploy the driver-side air bag module.

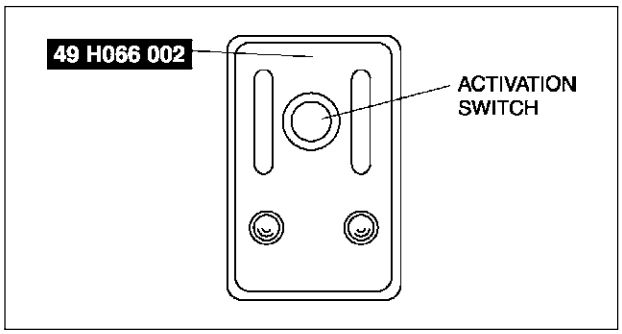

A6E8130W028

Passenger-side air bag module

Warning

- **Passenger-side air bag module is the dual inflator type. When the inflators are forced to be deployed simultaneously, one of them may fail to deploy. When disposing the air bag module, the inflators may be deployed accidentally. Make sure to deploy the inflators sequentially, following the procedures below.**

1. Remove the glove compartment.
2. Disconnect the passenger-side sir bag module connector.
3. Connect the **SST** (Adapter harness) to the passenger-side air bag module as shown it the figure.

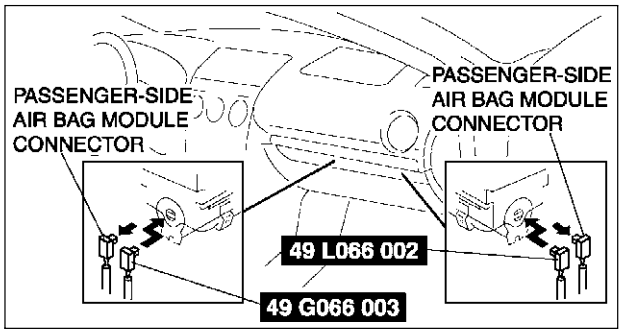

A6E8130W014

4. Connect the **SST** (Deployment tool) to the **SST** (Adapter harness).
5. Connect the red clip of the **SST** (Deployment tool) to the positive battery terminal and the black clip to the negative battery terminal.
6. Verify that the red light on the **SST** (Deployment tool) is illuminated.
7. Make sure all persons are standing **at least 6 m {20 ft}** away from the vehicle.

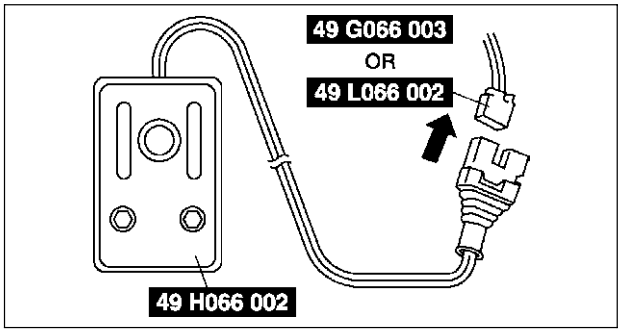

A6E8130W050

8. Press the activation switch on the **SST** (Deployment tool) to deploy the passenger-side air bag module.
9. Disconnect the **SST** (Deployment tool) from the **SST** (Adapter harness).
10. Connect the **SST** (Deployment tool) to the **SST** (Adapter harness).
11. Perform steps 5 through 8, in order to deploy the passenger-side air bag module.

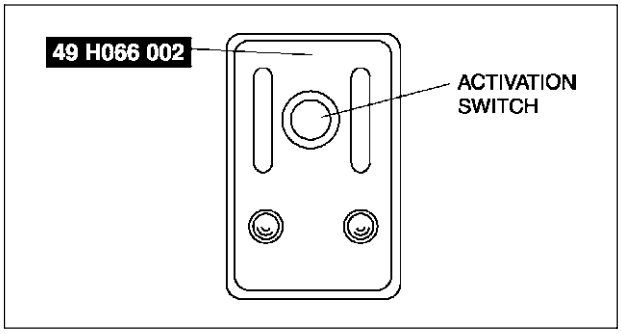

A6E8130W028

Side air bag module

1. Disconnect the side air bag module connector.
2. Connect the **SST** (Adapter harness) to the side air bag module.

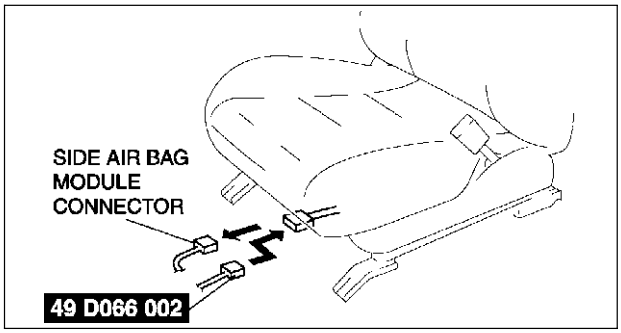

A6E8130W029

3. Connect the **SST** (Deployment tool) to the **SST** (Adapter harness).
4. Connect the red clip of the **SST** (Deployment tool) to the positive battery terminal and the black clip to the negative battery terminal.
5. Verify that the red light on the **SST** (Deployment tool) is illuminated.
6. Make sure all persons are standing **at least 6 m {20 ft}** from the vehicle.

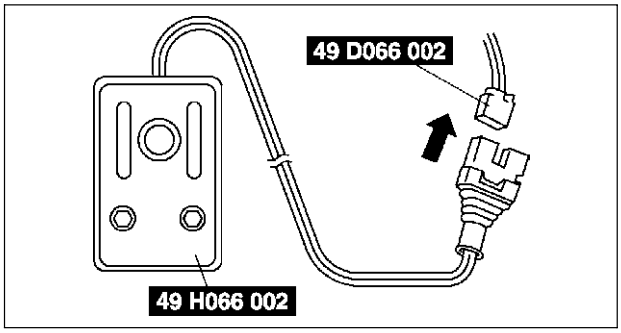

A6E8130W027

T

7. Press the activation switch on the **SST** (Deployment tool) to deploy the side air bag module.

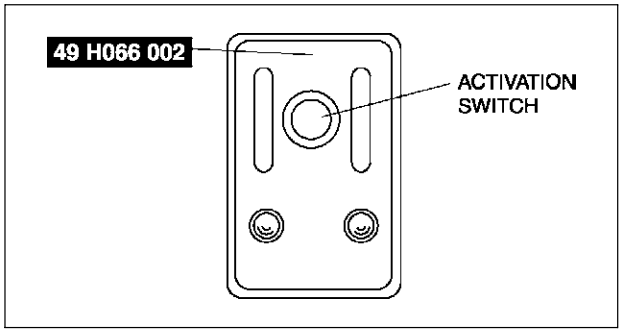

A6E8130W028

Curtain air bag module

1. Remove the side tire house trim. (4SD)
2. Remove the side trunk side trim. (5HB)
3. Disconnect the curtain air bag module connector.
4. Connect the **SST** (Adapter harness) to the curtain air bag module.

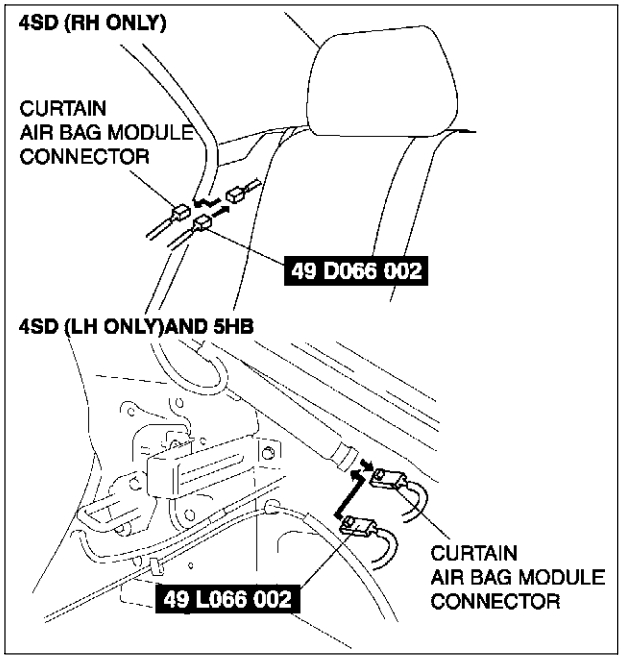

A6E8130W012

5. Connect the **SST** (Deployment tool) to the **SST** (Adapter harness).
6. Connect the red clip of the **SST** (Deployment tool) to the positive battery terminal and the black clip to the negative battery terminal.
7. Verify that the red light on the **SST** (Deployment tool) is illuminated.
8. Make sure all persons are standing **at least 6 m {20 ft}** from the vehicle.

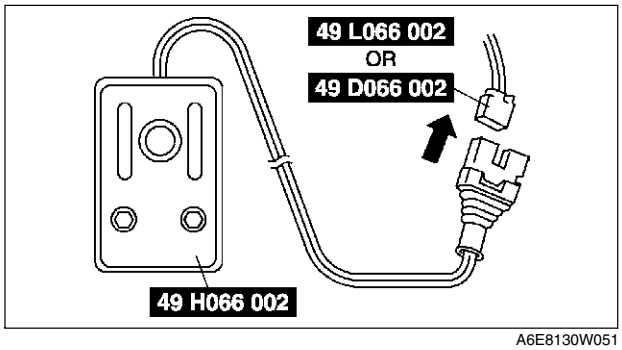

A6E8130W051

9. Press the activation switch on the **SST** (Deployment tool) to deploy the curtain air bag module.

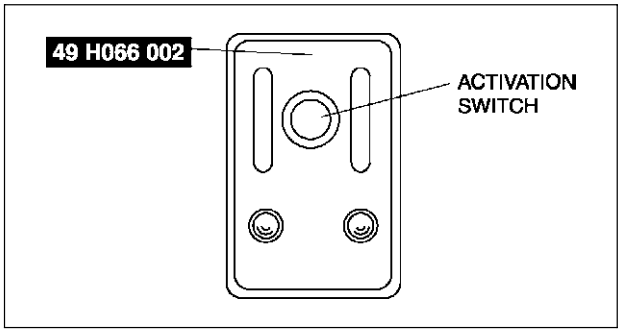

A6E8130W028

Pre-tensioner seat belt

1. Remove the B-pillar lower trim.
2. Remove the pre-tensioner seat belt and connect the **SST** (Adapter harness) to it as shown in the figure. (See S–100 FRONT SEAT BELT REMOVAL/INSTALLATION.)
3. Install the pre-tensioner seat belt.

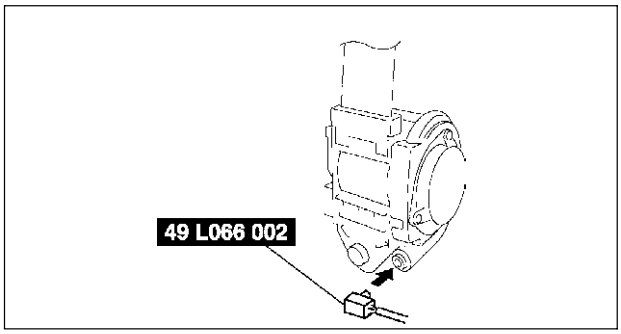

A6E8130W030

4. Connect the **SST** (Deployment tool) to the **SST** (Adapter harness).
5. Connect the red clip of the **SST** (Deployment tool) to the positive battery terminal and the black clip to the negative battery terminal.
6. Verify that the red light on the **SST** (Deployment tool) is illuminated.
7. Make sure all persons are standing **at least 6 m {20 ft}** from the vehicle.

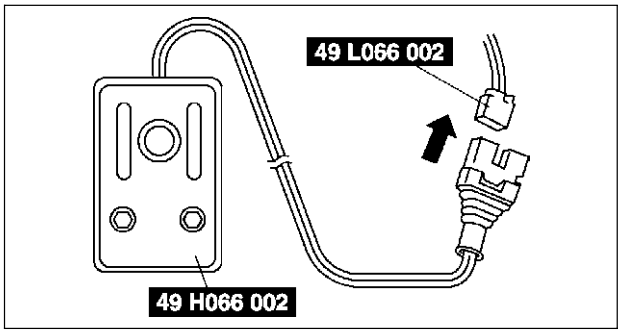

A6E8130W052

8. Press the activation switch on the **SST** (Deployment tool) to deploy the pre-tensioner seat belt.

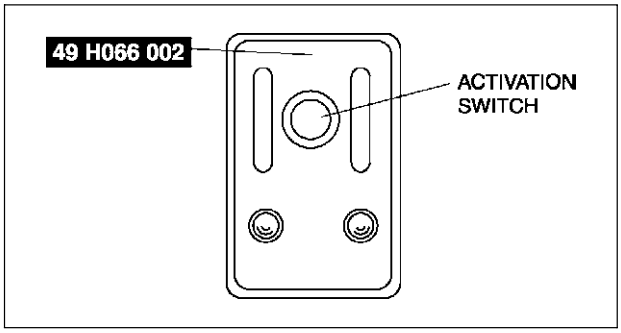

A6E8130W028

Deployment Procedure for Outside of Vehicle

1. Inspect the **SST** (Deployment tool). (See T–140 INSPECTION OF SST (DEPLOYMENT TOOL).)
2. Turn the ignition switch to LOCK position.
3. Disconnect the negative battery cable and wait for **more than 1 minute**.
4. Follow the appropriate procedure for deploying the driver-side air bag module, passenger-side air bag module, side air bag module, curtain air bag module, or pre-tensioner seat belt.

Driver-side air bag module

Warning
- **Driver-side air bag module is the dual inflator type. When the inflators are forced to be deployed simultaneously, one of them may fail to deploy. When disposing the air bag module, the inflators may be deployed accidentally. Make sure to deploy the inflators sequentially, following the procedures below.**

1. Remove the driver-side air bag module. (See T–120 DRIVER-SIDE AIR BAG MODULE REMOVAL/INSTALLATION.)
2. Connect the **SST** (Adapter harness) to the driver-side air bag module as shown in the figure,

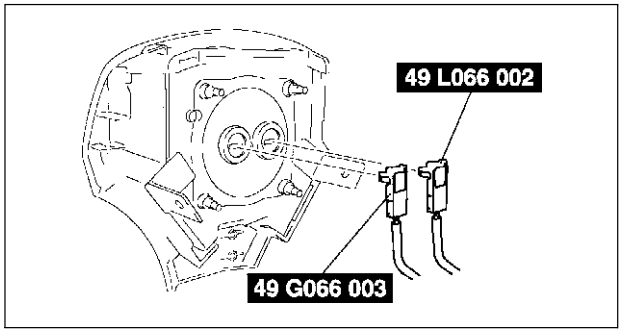

A6E8130W011

3. Place the driver-side air bag module on the center of the tire wheel with the module facing up. To secure the air bag module to the tire wheel, wrap the wire harness through the wheel and around the bolt installation hole at least four times.

Warning
- **If the air bag module is not properly installed to the tire wheel, serious injury may occur when the module is deployed. When installing the air bag module to the tire wheel, make sure the module is facing up.**

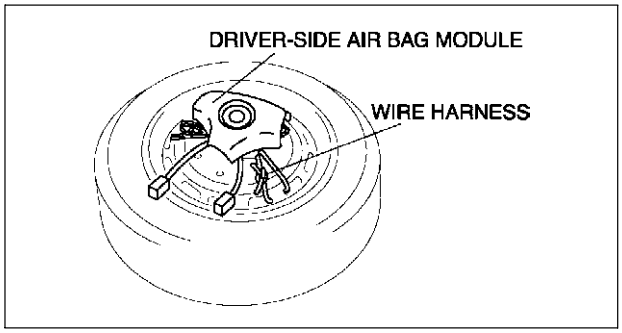

A6E8130W031

4. Stack three tires on top of the tire with the air bag module. Stack another tire that has a wheel on top of the four tires.

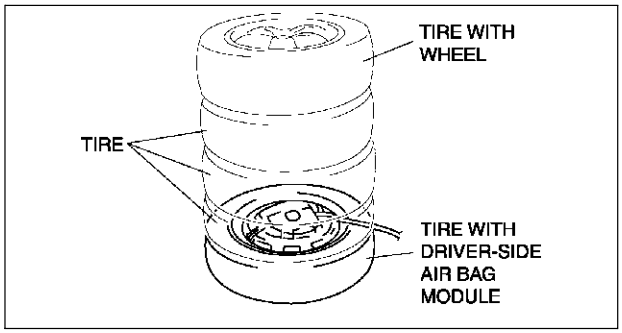

A6E8130W033

5. Tie all tires together with wire.

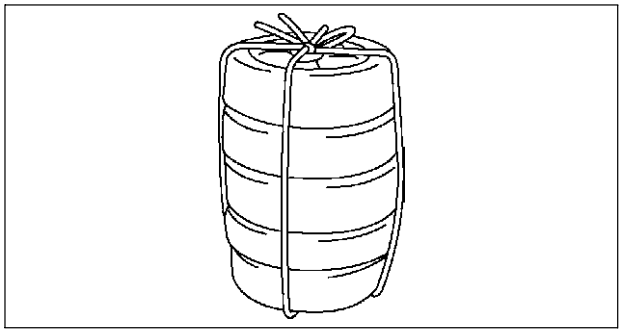
A6E8130W034

6. Connect the **SST** (Deployment tool) to the **SST** (Adapter harness).
7. Connect the red clip of the **SST** (Deployment tool) to the positive battery terminal and the black clip to the negative battery terminal.
8. Verify that the red light on the **SST** (Deployment tool) is illuminated.
9. Make sure all persons are standing **at least 6 m {20 ft}** away from the vehicle.

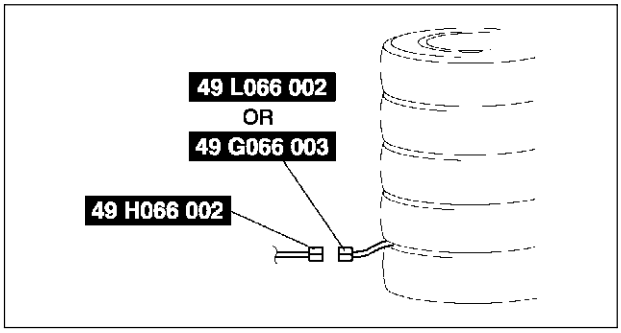

A6E8130W032

10. Press the activation switch on the **SST** (Deployment tool) to deploy the driver-side air bag module.
11. Disconnect the **SST** (Deployment tool) from the **SST** (Adapter harness).
12. Connect the **SST** (Deployment tool) to the **SST** (Adapter harness).
13. Perform steps 7 through 10, in order to deploy the driver-side air bag module.

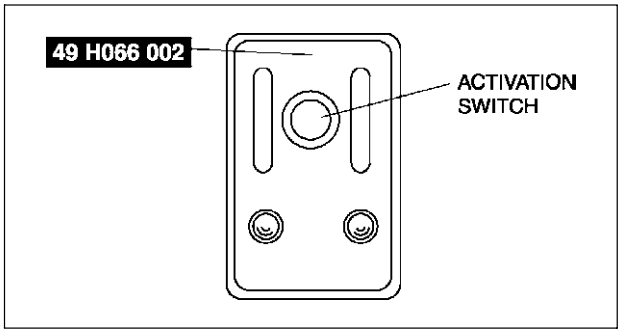

A6E8130W028

Passenger-side air bag module

Warning

- **Passenger-side air bag module is the dual inflator type. When the inflators are forced to be deployed simultaneously, one of them may fail to deploy. When disposing the air bag module, the inflators may be deployed accidentally. Make sure to deploy the inflators sequentially, following the procedures below.**

T

1. Remove the passenger-side air bag module. (See T–121 PASSENGER-SIDE AIR BAG MODULE REMOVAL/INSTALLATION.)
2. Install the bolts to the passenger-side air bag module.

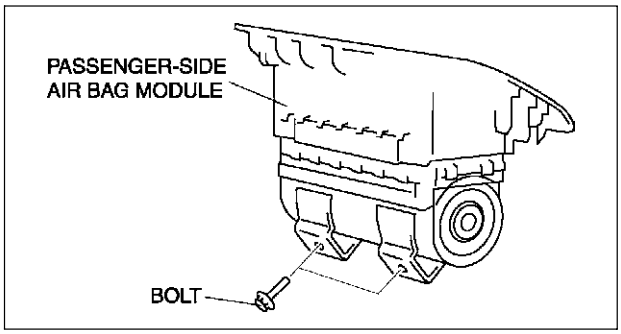

A6E8130W035

3. Connect the **SST** (Adapter harness) to the passenger-side air bag module as shown in the figure.

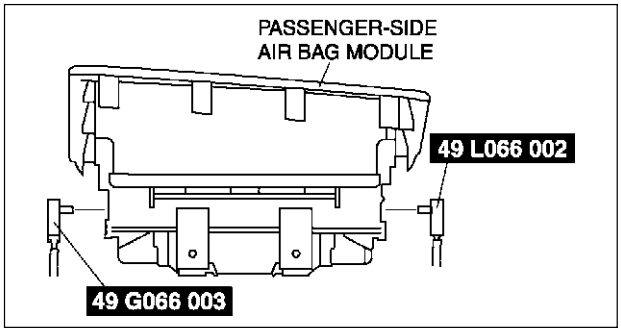

A6E8130W015

4. Tie the passenger-side air bag module to the tire with the module facing the center of the tire. Wrap the wire harness through the tire and around the bolts **at least four times**.

   Warning
   - **If the air bag module ia not properly installed to the tire, serious injury may occur when the module is deployed, When installing the air bag module to the tire, make sure the module is facing the center of the tire.**

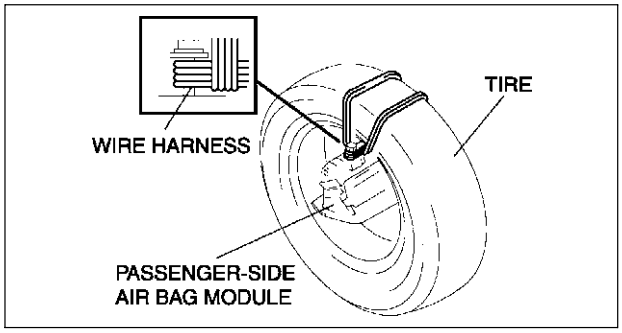

A6E8130W036

5. Stack the tire with the passenger-side air bag module on top of two tires. Stack another tire that has a wheel on top of the four tires.

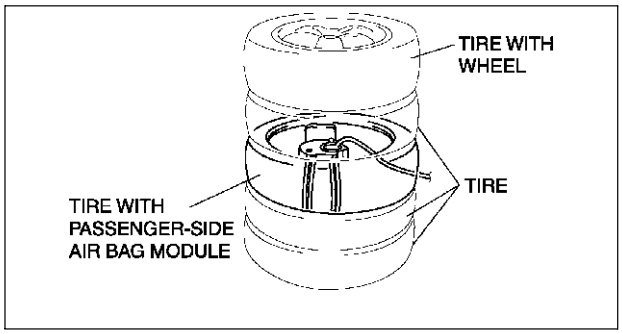

A6E8130W037

6. Tie all tires together with wire.

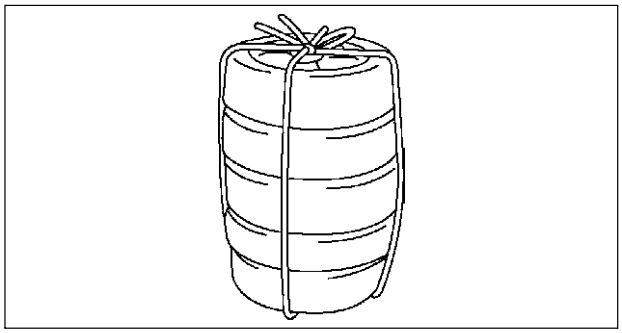
A6E8130W034

7. Connect the **SST** (Deployment tool) to the **SST** (Adapter harness).
8. Connect the red clip of the **SST** (Deployment tool) to the positive battery terminal and the black clip to the negative battery terminal.
9. Verify that the red light on the **SST** (Deployment tool) is illuminated.
10. Make sure all persons are standing **at least 6 m {20 ft}** away from the vehicle.

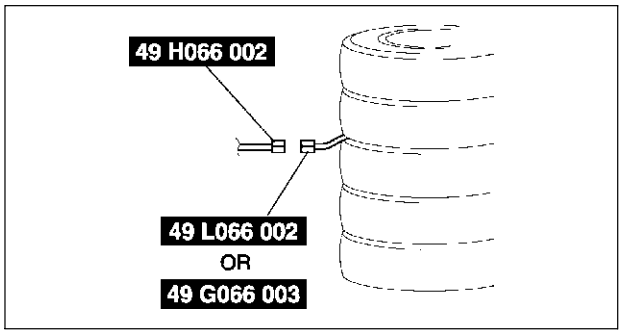

A6E8130W038

11. Press the activation switch on the **SST** (Deployment tool) to deploy the passenger-side air bag module.
12. Disconnect the **SST** (Deployment tool) from the **SST** (Adapter harness).
13. Connect the **SST** (Deployment tool) to the **SST** (Adapter harness).
14. Perform steps 8 through 11, in order to deploy the passenger-side air bag module.

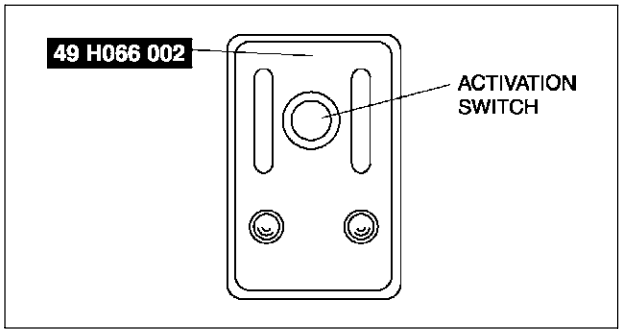

A6E8130W028

Side air bag module

1. Remove the side air bag module. (See T–121 SIDE AIR BAG MODULE REMOVAL/INSTALLATION.)
2. Connect the **SST** (Adapter harness) to the side air bag module as shown in the figure.

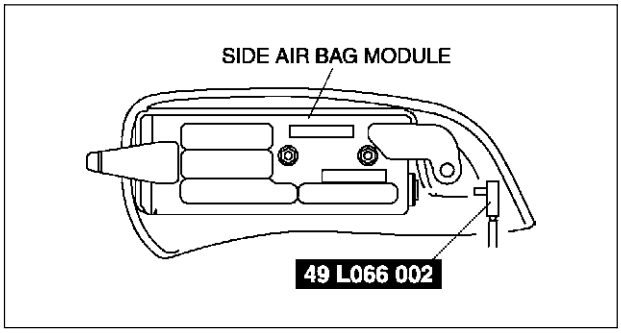

A6E8130W016

3. Tie the side air bag module to the tire with the module facing the center of the tire. Wrap the wire harness through the tire and around the bracket at least four times.

   Warning
   - **If the air bag module is not properly installed to the tire, serious injury may occur when the module is deployed. When installing the air bag module to the tire, make sure the module is facing the center of the tire.**

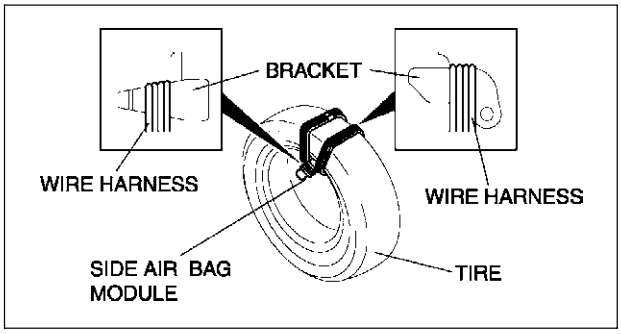

A6E8130W017

4. Stack the tire with the side air bag module on top of two tires. Stack a tire on top of three tires. Stack another tire that has a wheel on top of the four tires.

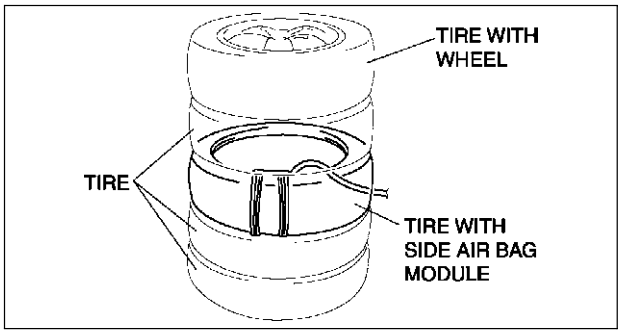

A6E8130W053

5. Tie all tires together with wire.

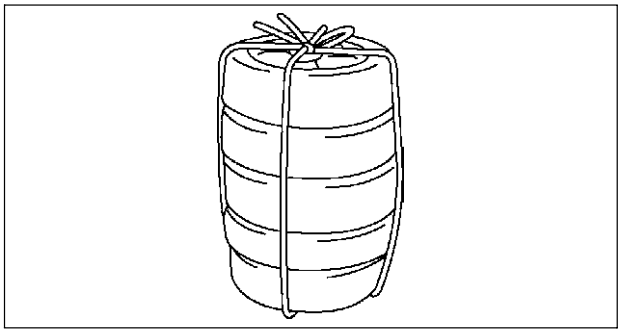

A6E8130W034

T

6. Control the **SST** (Deployment tool) to the **SST** (Adapter harness).
7. Connect the red clip of the **SST** (Deployment tool) to the positive battery terminal and the black clip to the negative battery terminal.
8. Verify that the red light on the **SST** (Deployment tool) is illuminated.
9. Make sure all persons are standing **at least 6 m {20 ft}** from the vehicle.

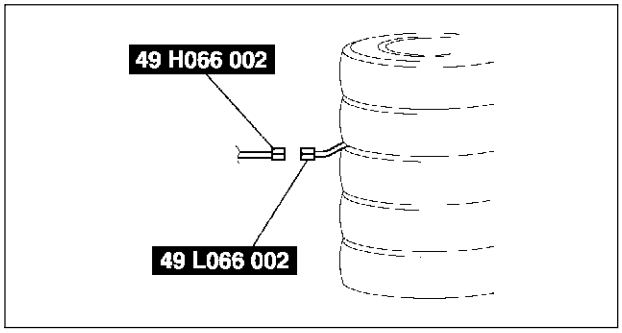

A6E8130W054

10. Press the activation switch on the **SST** (Deployment tool) to deploy the side air bag module.

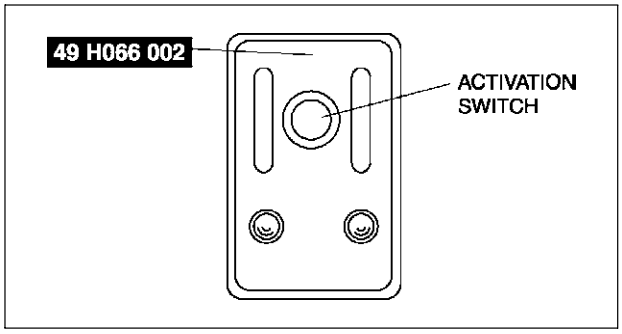

A6E8130W028

Curtain air bag module

1. Remove the curtain air bag module. (See T–122 CURTAIN AIR BAG MODULE REMOVAL/INSTALLATION.)
2. Secure the curtain air bag module in a vise, and cut off the deployment section, as shown in the figure.

   Warning
   - **Be sure not to collapse the pipe on the side where it is cut. If it is collapsed, the interior pressure of the pipe will build up and can cause it to explode during air bag module deployment.**

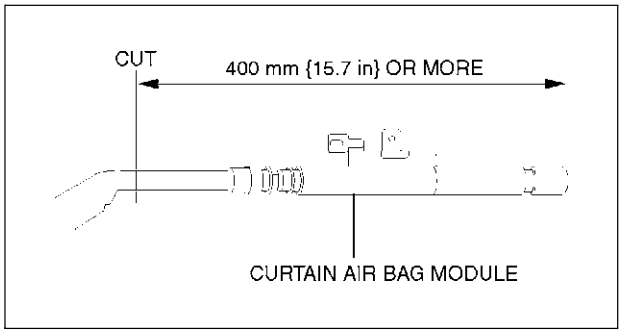

A6E8130W013

3. Connect the **SST** (Adapter harness) to the curtain air bag module as shown in the figure. (5HB)

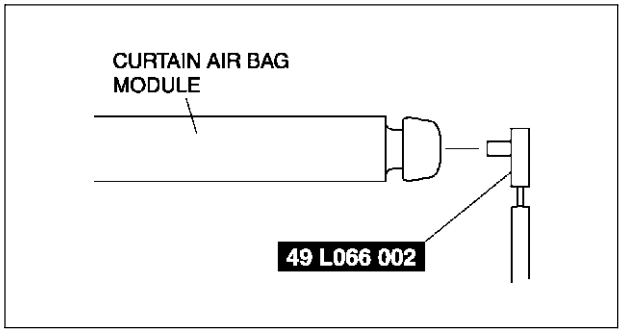

A6E8130W040

4. Tie the side air bag module to the tire with the module facing the center of the tire. Wrap the wire harness through the tire and around the bracket at least four times.

   Warning
   - **If the air bag module is not properly installed to the tire, serious injury may occur when the module is deployed. When installing the air bag module to the tire, make sure the module is facing the downward.**

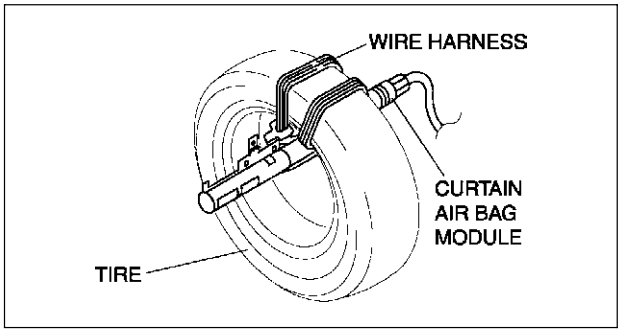

A6E8130W018

5. Connect the **SST** (Adapter harness) to the curtain air bag module as shown in the figure. (4SD, RH only)

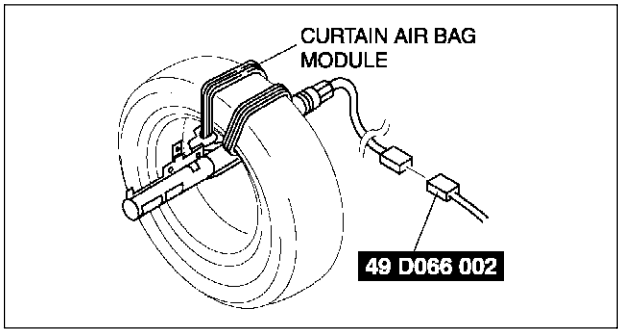

A6E8130W019

6. Stack the tire with the curtain air bag module on top of two tires. Stack a tire on top of three tires. Stack another tire that has a wheel on top of the four tires.

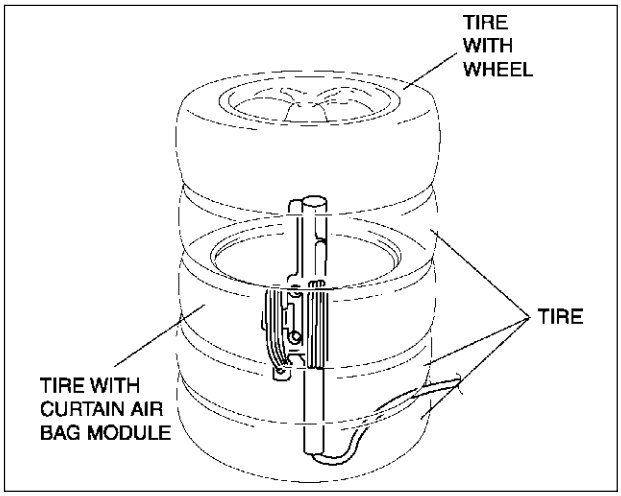

A6E8130W020

7. Tie all tires together with wire.

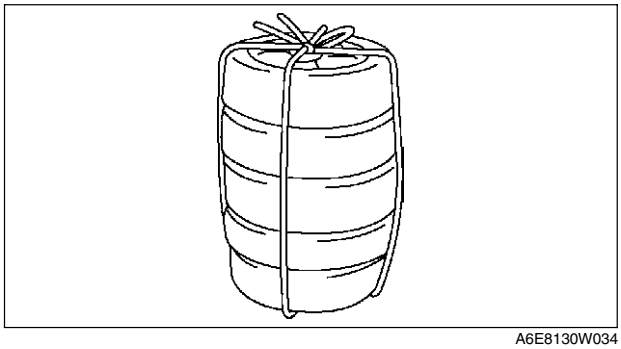
A6E8130W034

T

8. Control the **SST** (Deployment tool) to the **SST** (Adapter harness).
9. Connect the red clip of the **SST** (Deployment tool) to the positive battery terminal and the black clip to the negative battery terminal.
10. Verify that the red light on the **SST** (Deployment tool) is illuminated.
11. Make sure all persons are standing **at least 6 m {20 ft}** from the vehicle.

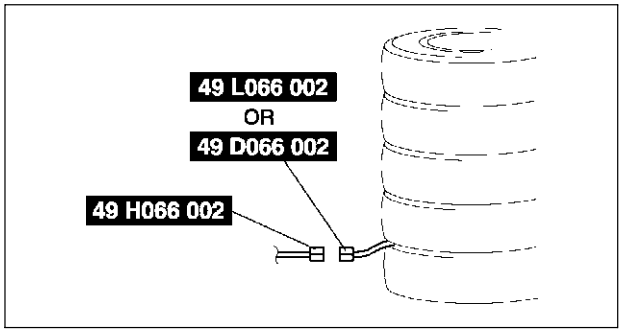

A6E8130W055

12. Press the activation switch on the **SST** (Deployment tool) to deploy the curtain air bag module.

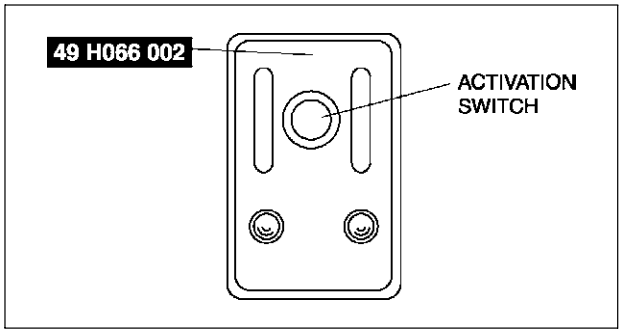

A6E8130W028

Pre-tensioner seat belt

1. Remove the pre-tensioner seat belt. (See S–100 FRONT SEAT BELT REMOVAL/INSTALLATION.)

Warning

- **If the pre-tensioner seat belt is not properly installed to the tire, serious injury may occur when the pre-tensioner part is deployed. When installing the pre-tensioner seat belt to the tire, make sure the pre-tensioner part is inside the tire.**

2. Connect the **SST** (Adapter harness) to the pre-tensioner seat belt as shown in the figure.

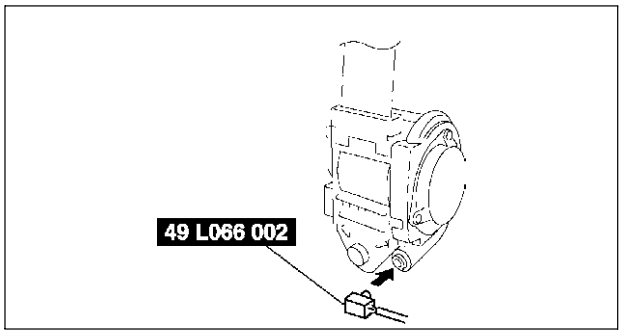

A6E8130W030

3. With the pre-tensioner part inside the tire, tie the pre-tensioner seat belt to the tire. Wrap the wire harness through the tire and around the pre-tensioner seat belt **at least four times**.

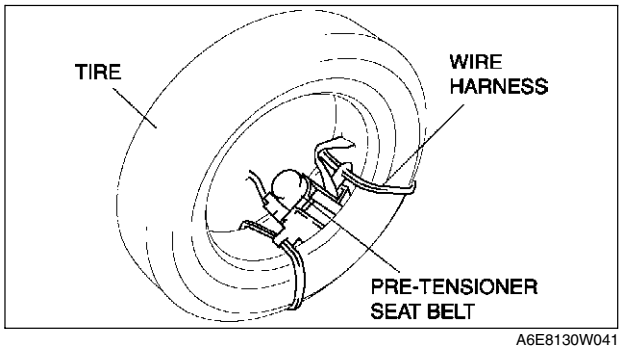

A6E8130W041

4. Stack the tire with the pre-tensioner seat belt on top of two tires. Stack a tire on top of the three tires. Stack another tire that has a wheel on top of the four tires.

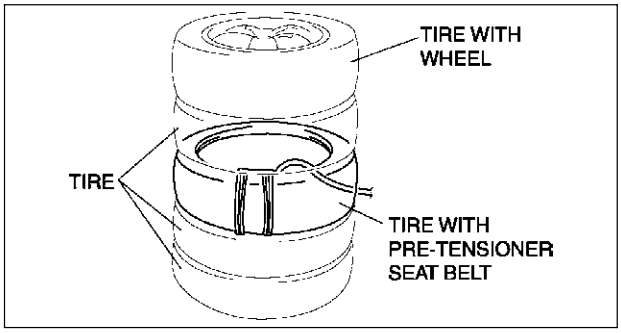

A6E8130W039

5. Tie all tires together with wire.

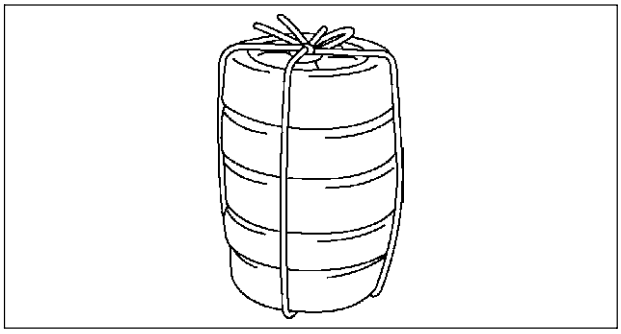
A6E8130W034

6. Connect the **SST** (Deployment tool) to the **SST** (Adapter harness).
7. Connect the red clip of the **SST** (Deployment tool) to the positive battery terminal and the black clip to the negative battery terminal.
8. Verify that the red light on the **SST** (Deployment tool) is illuminated.
9. Make sure all persons are standing **at least 6 m {20 ft}** from the vehicle.

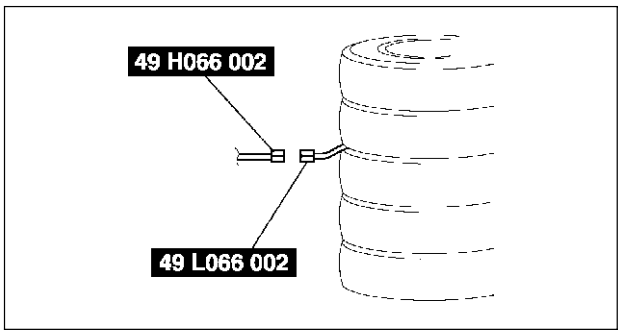

A6E8130W054

10. Press the activation switch on the **SST** (Deployment tool) to deploy the pre-tensioner seat belt.

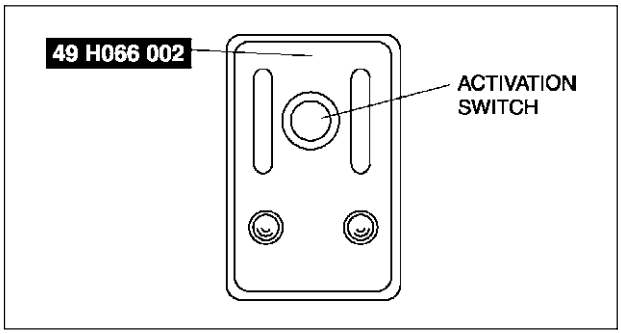

A6E8130W028

AIR BAG MODULE AND PRE-TENSIONER SEAT BELT DISPOSAL PROCEDURES

A6E813057000W02

Warning

- **Before scrapping a vehicle with a live (undeployed) air bag module and pre-tensioner seat belt, deploy the air bag module and pre-tensioner seat belt. Never dispose of a live (undeployed) air bag module and pre-tensioner seat belt.**
- **The air bag module and the pre-tensioner seat belt are very hot immediately after they are deployed. You can get burned. Do not touch the air bag module and pre-tensioner seat belt for at least 15 minutes after deployment.**
- **Pouring water on the deployed air bag module and pre-tensioner seat belt is dangerous. The water will mix with the residual gases to form a gas that can make breathing difficult. Do not pour water on the deployed air bag module and pre-tensioner seat belt.**

- **The deployed air bag module and pre-tensioner seat belt may contain deposits of sodium hydroxide, a caustic byproduct of the gas-generated combustion. If this substance gets into your eyes or on your hands, it can cause irritation and itching. When handling the deployed air bag module and pre-tensioner seat belt, wear gloves and safety glasses.**
- **Due to the adoption of 2-step deployment control in both the driver and passenger-side air bag modules, depending on the impact force, it is possible that inflator No. 2 might not deploy. In such cases, before disposing of the air bag module, make sure to follow the inflator deployment procedures and verify complete deployment of inflator No. 1 and 2.**

1. Put on gloves and safety glasses.
2. Put the deployed air bag module or pre-tensioner seat belt in a plastic bag, seal it, and then dispose of it.
3. Wash your hands after removing your gloves.

INSPECTION OF SST (DEPLOYMENT TOOL)

A6E813001046W03

- Use the **SST** (Deployment tool) to deploy a live (undeployed) air bag module or pre-tensioner seat belt before disposing of it.
- Before using the **SST** (Deployment tool), inspect its operation.

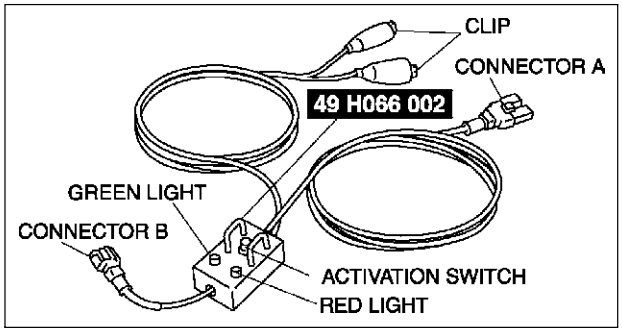

A6E8130W043

Inspection Procedure

1. Follow the steps below to verify that the SST (Deployment tool) is operating correctly.
   - If not as specified, do not use the **SST** (Deployment tool) because it may cause the air bag module or pre-tensioner seat belt to unexpectedly deploy upon connection to the air bag module or pre-tensioner seat belt.

Step	Inspection procedure	Light condition	
		Green	Red
1	Connect red clip to positive battery terminal and black clip to negative battery terminal.	On	Off
2	Connect connectors A and B of **SST** (Deployment tool).	Off	On
3	Press activation switch.	On	Off

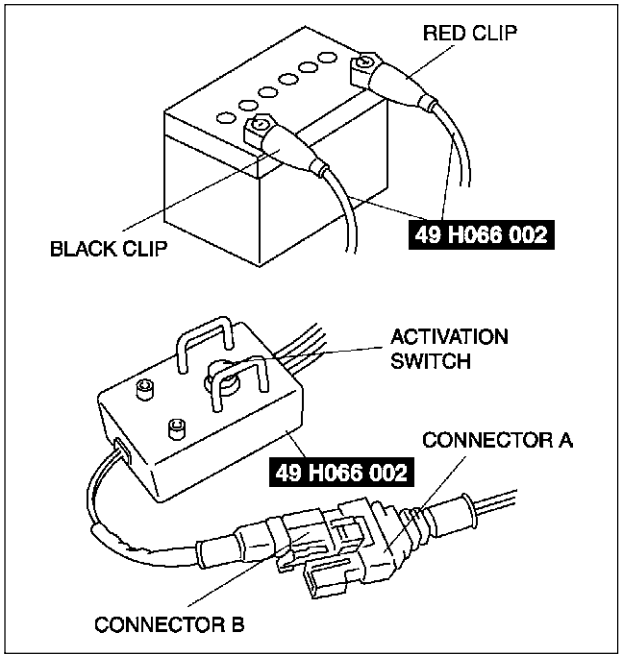

A6E8130W042

ON-BOARD DIAGNOSTIC [MULTIPLEX COMMUNICATION SYSTEM]

MULTIPLEX COMMUNICATION SYSTEM

A6E816255430W01

Outline

- In case the controller area network (CAN) system is malfunctioning, read the DTCs of the following modules, using the **SST** (WDS or equivalent) to determine the malfunctioning system.
  - — PCM
  - — DSC HU/CM (with DSC)
  - — ABS (ABS/TCS) HU/CM (with ABS (ABS/TCS)
  - — Instrument cluster

Flowchart

- Use the following flowchart to verify the cause of the trouble.

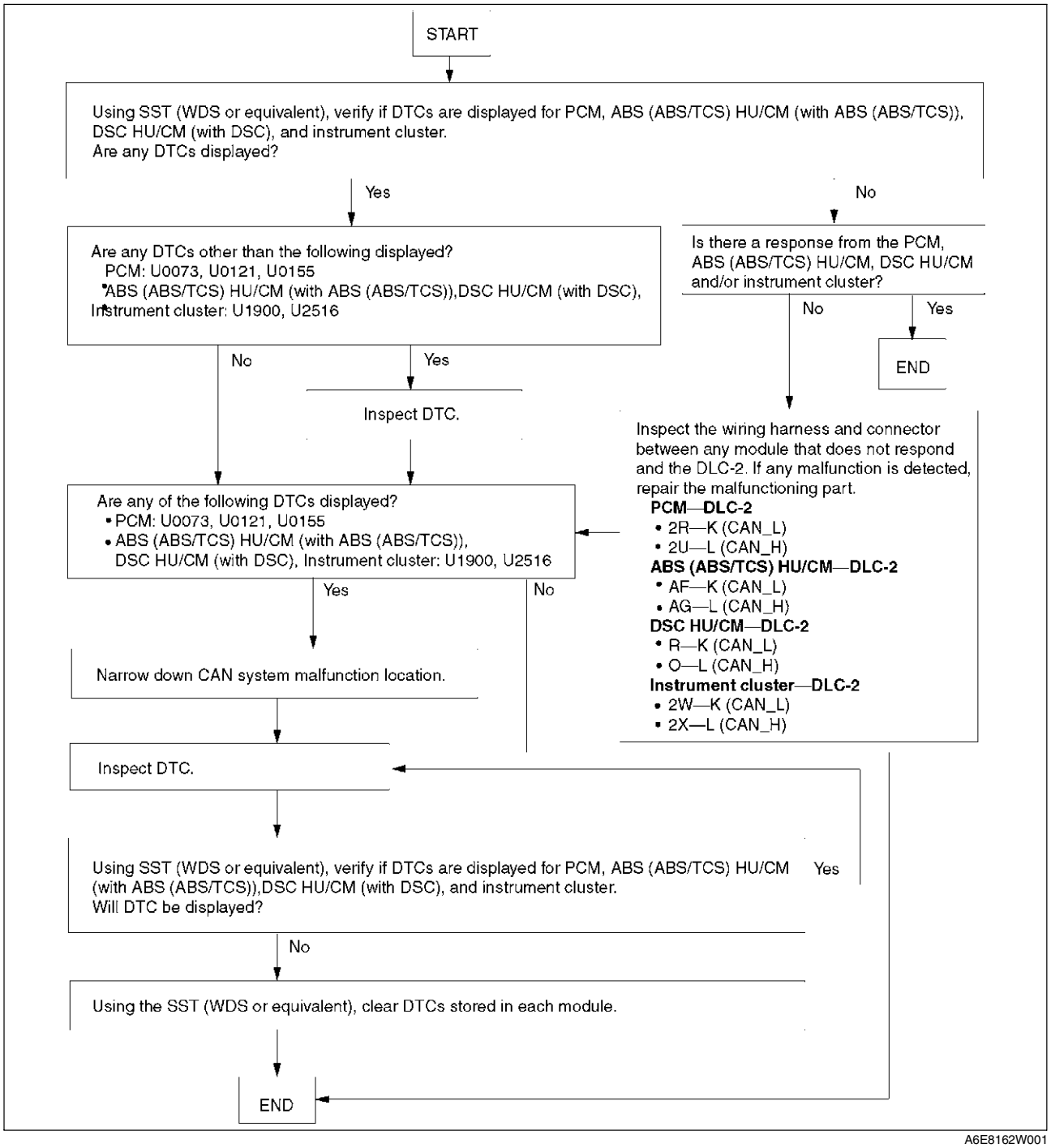

A6E8162W001

T

DTC TABLE

A6E816255430W02

DTC	Malfunction location	Related module	Page
U0073	CAN system communication error	PCM	(See T–144 DTC U0073, U1900, U2516)
U0121	Communication error to ABS (ABS/TCS) HU/CM or DSC HU/CM		—
U0155	Communication error to instrument cluster		
U1900	CAN system communication error	• ABS (ABS/TCS) HU/CM (with ABS (ABS/TCS) • DSC HU/CM (with DSC) • Instrument cluster	(See T–144 DTC U0073, U1900, U2516)
U2516	CAN system wiring harness open and short circuit		

PID/DATA MONITOR TABLE

A6E816255430W03

PID name (definition)	Condition	Specification	Related module	Terminal
IC_MSG (Missing message from the instrument cluster)	Present	Circuit in the instrument cluster is normal.	ABS (ABS/TCS) HU/CM or DSC HU/CM	• ABS (ABS/TCS) HU/CM: O, R • DSC HU/CM: AF, AG • Instrument cluster: 2W, 2X
	Not Present	Circuit in the instrument cluster is abnormal.		
ABS_MSG (Missing message from the ABS (ABS/TCS) HU/CM or DSC HU/CM)	Present	Circuit in the ABS (ABS/TCS) HU/CM or DSC HU/CM is normal.	Instrument cluster	
	Not Present	Circuit in the ABS (ABS/TCS) HU/CM or DSC HU/CM is abnormal.		
PCM_MSG (Missing message from the PCM)	Present	Circuit in the PCM is normal.	• ABS (ABS/TCS) HU/CM or DSC HU/CM • Instrument cluster	
	Not Present	Circuit in the PCM is abnormal.		

PROCEDURES FOR DETERMINING THE LOCATION OF A MALFUNCTION

A6E816255430W04

System Wiring Diadram

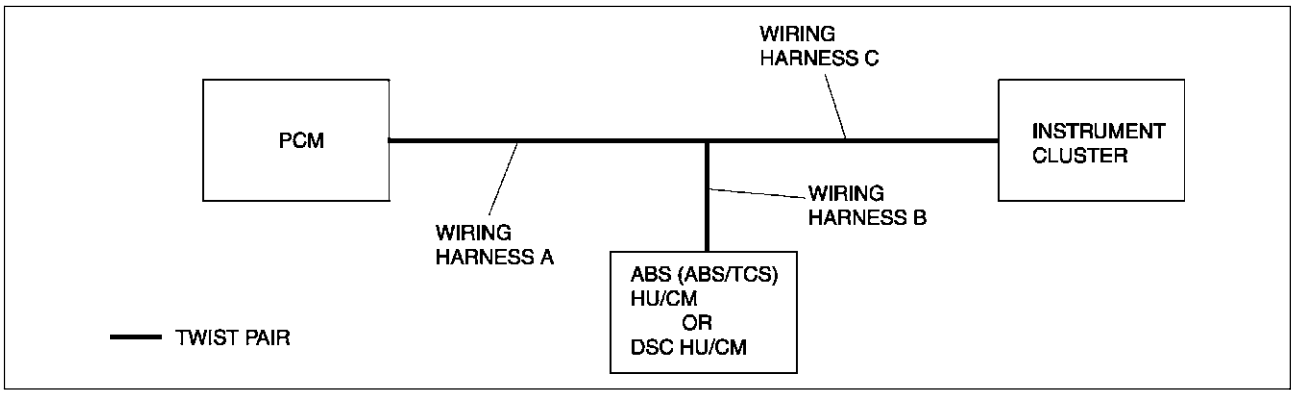

A6E8162W002

PCM

1. Check the display of DTC U0121 and/or U0155, using the **SST** (WDS or equivalent). (See T–142 DTC TABLE.)
2. Referring to the following table, determine the malfunctioning part of the CAN system.

X: Normal
—: Communication error

Module	Communication status		Malfunction location
	• **ABS (ABS/TCS) HU/CM** • **DSC HU/CM**	**Instrument cluster**	
PCM	—	—	• Wiring harness A • PCM
	—	X	• Wiring harness B • ABS (ABS/TCS) HU/CM • DSC HU/CM
	X	—	• Wiring harness C • Instrument cluster

ABS/TCS HU/CM or DSC HU/CM

1. Accec and monitor the “PCM MSG” and “IC MSG”of PID using the **SST** (WDS or equivalent).
2. Referring to the PID/DATA MONITOR, confirm the display status of the PID. (See T–142 PID/DATA MONITOR TABLE.)
3. Referring to the following table, determine the malfunctioning part of the CAN system.

X: Normal
—: Communication error

Module	Communication status		Malfunction location
	PCM	**Instrument cluster**	
• ABS (ABS/TCS) HU/CM • DSC HU/CM	—	—	• Wiring harness B • ABS (ABS/TCS) HU/CM • DSC HU/CM
	—	X	• Wiring harness A • PCM
	X	—	• Wiring harness C • Instrument cluster

Instrument Cluster

1. Accec and monitor the “PCM MSG” and “ABS MSG” of PID using the **SST** (WDS or equivalent).
2. Referring to the PID/DATA MONITOR, confirm the display status of the PID. (See T–142 PID/DATA MONITOR TABLE.)
3. Referring to the following table, determine the malfunctioning part of the CAN system.

X: Normal
—: Communication error

Module	Communication status		Malfunction location
	PCM	• **ABS (ABS/TCS) HU/CM** • **DSC HU/CM**	
Instrument cluster	—	—	• Wiring harness C • Instrument cluster
	—	X	• Wiring harness A • PCM
	X	—	• Wiring harness B • ABS (ABS/TCS) HU/CM • DSC HU/CM

T

DTC U0073, U1900, U2516

A6E816255430W05

DTC	U0073 **U1900**	**CAN system communication error**
	U2516	**CAN system wiring harness open and short circuit**
DETECTION CONDITION		**Warning** • **Detection conditions are for understanding DTC outline before performing inspection. Performing inspection with only detection conditions may cause injury due to operating error or damage the system. When performing inspection, always follow inspection procedure.** • CAN system related harness malfunction • Related module communication error
POSSIBLE CAUSE		• Open or short circuit in wiring harness • Malfunction of connectors between PCM, ABS (ABS/TCS) HU/CM or DSC HU/CM and Instrument cluster • PCM malfunction • ABS (ABS/TCS) HU/CM malfunction (with ABS (ABS/TCS)) • DSC HU/CM malfunction (with DSC) • Instrument cluster malfunction

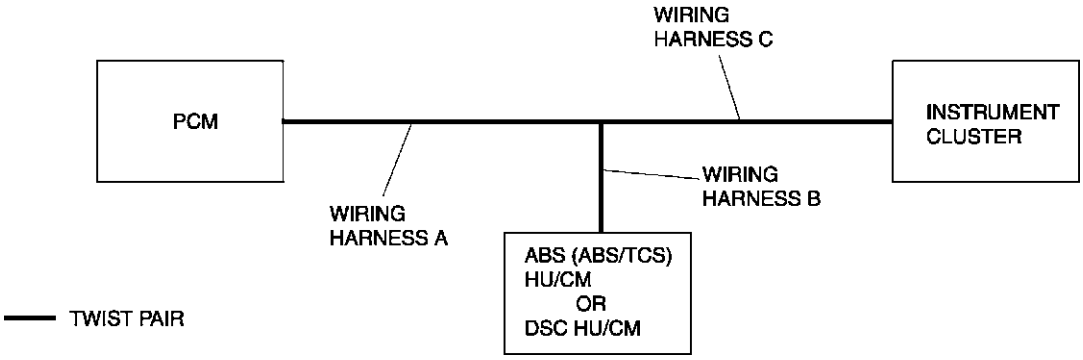

Diagnostic procedure

STEP	INSPECTION		ACTION
1	**DETERMINING THE LOCATION OF A MALFUNCTION** • Determine the malfunctioning part of the CAN system. (See T–142 PROCEDURES FOR DETERMINING THE LOCATION OF A MALFUNCTION) • Is the malfunctioning part the wiring harness C or the instrument cluster?	Yes	Go to Step 4.
		No	Go to next step.
2	**DETERMINING THE LOCATION OF A MALFUNCTION** • Is the malfunctioning part the wiring harness B or the ABS (ABS/TCS) HU/CM? (with ABS (ABS/TCS)) • Is the malfunctioning part the wiring harness B or the DSC HU/CM? (with DSC)	Yes	Go to Step 8.
		No	Go to next step.
3	**DETERMINING THE LOCATION OF A MALFUNCTION** • Is the malfunctioning part the wiring harness A or the PCM?	Yes	Go to Step 12.
		No	Troubleshooting completed.
4	**INSPECT INSTRUMENT CLUSTER CONNECTOR** • Disconnect negative battery cable. • Disconnect instrument cluster connector. • Is poor connection detection bars of instrument cluster connector okay?	Yes	Go to next step.
		No	Replace wiring harness.
5	• Is vehicle equipped with DSC?	Yes	Go to next step.
		No	Go to Step 7.

STEP	INSPECTION		ACTION
6	**INSPECT WIRING HARNESS BETWEEN DSC HU/CM AND INSTRUMENT CLUSTER** • Disconnect DSC HU/CM connector. • Inspect following wiring harness between DSC HU/CM and instrument cluster terminals for short to ground, short power supply, and open circuit: — AF—2W (CAN_L) — AG—2X (CAN_H) • Is wiring harness okay?	Yes	Replace instrument cluster, then go to Step 16.
		No	Replace wiring harness.
7	**INSPECT WIRING HARNESS BETWEEN ABS (ABS/TCS) HU/CM AND INSTRUMENT CLUSTER** • Disconnect ABS (ABS/TCS) HU/CM connector. • Inspect following wiring harness between ABS (ABS/TCS) HU/CM and instrument cluster terminals for short to ground, short power supply, and open circuit: — R—2W (CAN_L) — O—2X (CAN_H) • Is wiring harness okay?	Yes	Replace instrument cluster, then go to Step 16.
		No	Replace wiring harness.
8	**INSPECT ABS (ABS/TCS) HU/CM OR DSC HU/CM CONNECTOR** • Disconnect negative battery cable. • Disconnect ABS (ABS/TCS) HU/CM or DSC HU/CM connector. • Is poor connection detection bars of ABS (ABS/TCS) HU/CM or DSC HU/CM connector okay?	Yes	Go to next step.
		No	Replace wiring harness.
9	• Is vehicle equipped with DSC?	Yes	Go to next step.
		No	Go to Step 11.
10	**INSPECT WIRING HARNESS BETWEEN DSC HU/CM AND INSTRUMENT CLUSTER** • Disconnect instrument cluster connector. • Inspect following wiring harness between DSC HU/CM and instrument cluster terminals for short to ground, short power supply, and open circuit: — AF—2W (CAN_L) — AG—2X (CAN_H) • Is wiring harness okay?	Yes	Replace DSC HU/CM , then go to Step 16.
		No	Replace wiring harness.
11	**INSPECT WIRING HARNESS BETWEEN ABS (ABS/TCS) HU/CM AND INSTRUMENT CLUSTER** • Disconnect instrument cluster connector. • Inspect following wiring harness between ABS (ABS/TCS) HU/CM and instrument cluster terminals for short to ground, short power supply, and open circuit: — R—2W (CAN_L) — O—2X (CAN_H) • Is wiring harness okay?	Yes	Replace ABS (ABS/TCS) HU/CM , then go to Step 16.
		No	Replace wiring harness.
12	**INSPECT PCM CONNECTOR** • Disconnect negative battery cable. • Disconnect PCM connector. • Is poor connection detection bars of PCM connector okay?	Yes	Go to next step.
		No	Replace wiring harness.
13	• Is vehicle equipped with DSC?	Yes	Go to next step.
		No	Go to Step 15.

T

STEP	INSPECTION		ACTION
14	**INSPECT WIRING HARNESS BETWEEN PCM AND DSC HU/CM** • Disconnect negative battery cable. • Disconnect DSC HU/CM connector. • Inspect following wiring harness between PCM and DSC HU/CM terminals for short to ground, short power supply, and open circuit: — 2R—AF (CAN_L) — 2U—AG (CAN_H) • Is wiring harness okay?	Yes	Replace PCM, then go to Step 16.
		No	Replace wiring harness.
15	**INSPECT WIRING HARNESS BETWEEN PCM AND ABS (ABS/TCS) HU/CM** • Disconnect negative battery cable. • Disconnect ABS (ABS/TCS) HU/CM connector. • Inspect following wiring harness between PCM and ABS (ABS/TCS) HU/CM terminals for short to ground, short power supply, and open circuit: — 2R—R (CAN_L) — 2U—O (CAN_H) • Is wiring harness okay?	Yes	Replace PCM, then go to next step.
		No	Replace wiring harness.
16	**CHECK DTC INDICATE** • Connect PCM connector. • Connect ABS (ABS/TCS) HU/CM or DSC HU/CM connector. • Connect instrument cluster connector. • Clear DTC from module memory using **SST** (WDS or equivalent). • Perform KOEO/KOER self-test. • Are DTCs U0073, U1900 and/or U2516 indicated?	Yes	Repeat from Step 1.
		No	Troubleshooting completed.

ON-BOARD DIAGNOSTIC [HEADLIGHT AUTO LEVELING SYSTEM]

FOREWORD

A6E816467000W01

Outline

- The OBD (on-board diagnostic) test inspects the integrity and function of the headlight auto leveling system and output the results when reqested by the specitic tests.
- OBD test also:
  - — Provides a quick inspection of the headlight auto leveling system.
  - — Is usually performed at the start of each deagnostic procedure.
  - — Provides verification after repairs to ensure that no other faults occurred during service.
- Diagnostic DTC can be read/cleared, using the **SST** (WDS or equivalent).

Read/clear diagnostic results

- This function allows you to read or clear DTCs in the auto leveling control unit (main) memory.

Reading DTCs Procedure Using WDS or equivalent

1. Connect WDS or equivalent to the vehicle DLC-2 16-pin connector.
2. Retrieve DTC by WDS or equivalent.

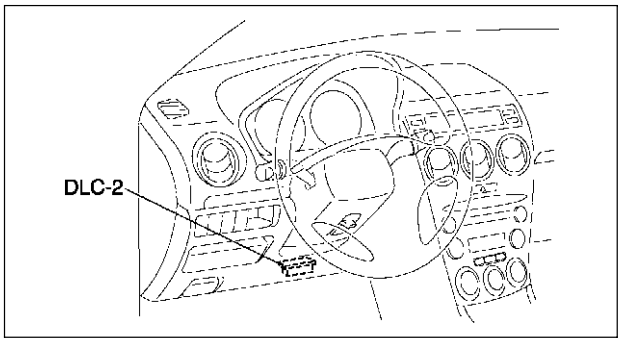

A6E3970W002

T

Clearing DTCs Procedures Using WDS or equivalent

1. After repairs have been made, perform the **DTCs reading procedure.**
2. Erase DTC by WDS or equivalent.
3. Ensure that the customer's concern has been resolved.

Active Command Modes Procedure

1. Connect WDS or equivalent to the vehicle DLC-2 16-pin connector.
2. Turn the ignition switch to ON (Engine OFF) or start engine.
3. Turn on the headlight (low-beam).
4. Activate active command modes using WDS or equivalent.

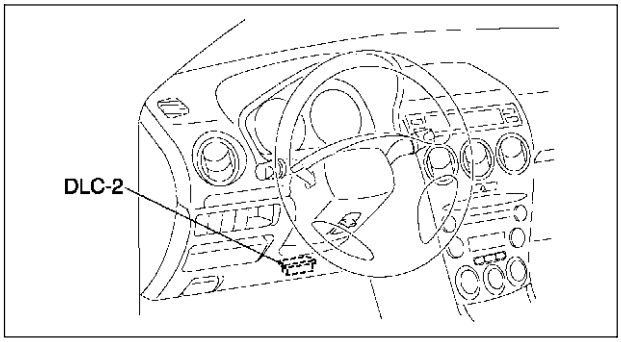

A6E3970W002

DTC TABLE

A6E816467000W02

- DTCs are common for present and past malfunction diagnosis.

DTC	Description	Page
B1342	Auto leveling control unit system.	(See T–148 DTC B1342)
B2141	Configuration setting system for auto leveling control unit.	(See T–148 DTC B2141, B2477)
B2390	Communication system between auto leveling control unit (main) and auto leveling contro unit (sub).	(See T–149 DTC B2390)
B2477	Auto leveling control unit setting system.	—
B2607	Auto leveling control unit controlling system.	(See T–151 DTC B2607)
B2615	Front auto leveling sensor or rear auto leveling sensors power supply system.	(See T–153 DTC B2615)
B2616	Front auto leveling sensor signal system.	(See T–155 DTC B2616)
B2619	Rear auto leveling sensor signal system.	(See T–157 DTC B2619)
B2626	Headlight zerosetting system for auto leveling control unit.	(See T–158 DTC B2626, B2477)
B2735	Headlight leveling actuator signal system.	(See T–159 DTC B2735)

DTC B1342

A6E816467000W03

DTC B1342	**Auto leveling control unit system.**
DETECTION CONDITION	**Warning** • **incorrect servicing of the auto leveling control unit could result in electrical shock because the unit is integrated with the discharge headlight control unit. Before servicing the auto leveling control unit, always refer to "Discharge headlight service warnings." (See T–25 DISCHARGE HEADLIGHT SERVICE WARNINGS)** Auto leveling control unit does not work properly.
POSSIBLE CAUSE	• Auto leveling control unit malfunction • Poor fit of auto leveling control unit

Diagnostic procedure

STEP	INSPECTION		ACTION
1	**INSPECT AUTO LEVELING CONTROL UNIT CONNECTION** • Check fit of auto leveling control unit. • Is condition of the fit okay?	Yes	Replace auto leveling control unit. (See T–30 DISCHARGE HEADLIGHT CONTROL UNIT REMOVAL/INSTALLATION)
		No	After correcting fit, clear DTC and check DTC again. • If DTC is displayed again, replace auto leveling control unit. (See T–30 DISCHARGE HEADLIGHT CONTROL UNIT REMOVAL/INSTALLATION)

DTC B2141, B2477

A6E816467000W04

DTC B2141, B2477	**Configuration setting system for auto leveling control unit.**
DETECTION CONDITION	**Warning** • **incorrect servicing of the auto leveling control unit could result in electrical shock because the unit is integrated with the discharge headlight control unit. Before servicing the auto leveling control unit, always refer to "Discharge headlight service warnings." (See T–25 DISCHARGE HEADLIGHT SERVICE WARNINGS)** Configuration for auto leveling control unit is not set.
POSSIBLE CAUSE	• Configuration for auto leveling control unit is not set or the setting is invalid

Diagnostic procedure

ACTION
Check connections of each sensor and the unit. Then connect WDS or equivalent and perform configuration. (See T–30 AUTO LEVELING CONTROL UNIT CONFIGURATION)

DTC B2390

A6E816467000W05

DTC B2390	**Communication system between auto leveling control unit (main) and auto leveling control unit (sub).**
DETECTION CONDITION	**Warning** • **incorrect servicing of the auto leveling control unit could result in electrical shock because the unit is integrated with the discharge headlight control unit. Before servicing the auto leveling control unit, always refer to "Discharge headlight service warnings." (See T–25 DISCHARGE HEADLIGHT SERVICE WARNINGS)** Communication between auto leveling control unit (main) and auto leveling control unit (sub) is not performed.
POSSIBLE CAUSE	• Auto leveling control unit (main) malfunction • Open or shortcircuit in wiring harness between auto leveling control unit (main) and auto leveling control unit (sub)

② HEADLIGHT (LH) / HEADLIGHT (RH)

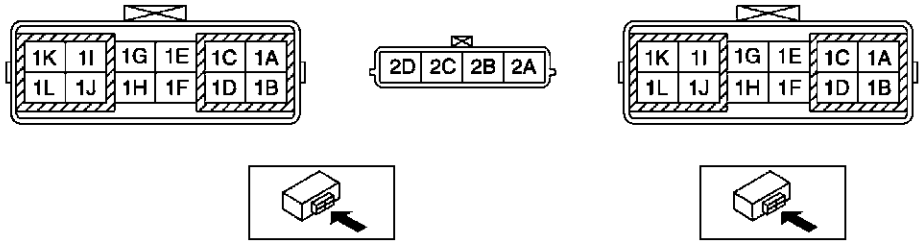

AUTO LEVELING CONTROL UNIT (MAIN) CONNECTOR / AUTO LEVELING CONTROL UNIT (SUB) CONNECTOR

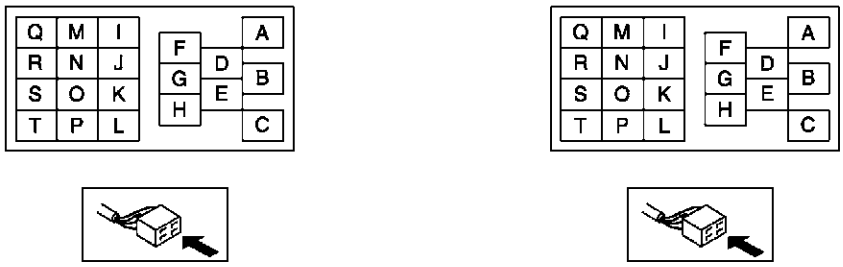

③ HEADLIGHT (LH) HARNESS SIDE CONNECTOR / HEADLIGHT (RH) HARNESS SIDE CONNECTOR

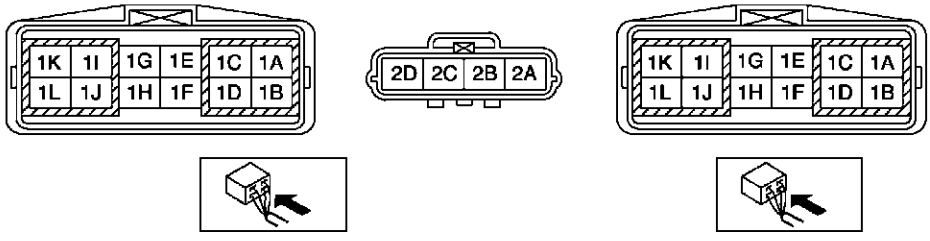

T

Diagnostic procedure

STEP	INSPECTION		ACTION
1	**INSPECT CONNECTOR CONNECTION** • Check fit of auto leveling control units and headlight connectors on both sides (auto leveling control unit (main) and (sub)). • Are installation condition and fit okay?	Yes	Go to next step.
		No	After correcting fit, clear DTC and check DTC again. • If DTC is displayed again, go to next step.
2	**INSPECT HEADLIGHT (LH) AND HEADLIGHT (RH)** • Disconnect auto leveling control unit (main) connector (20-pin) and headlight (LH) connector (12-pin) and auto leveling control unit (sub) connector (20-pin) and headlight (RH) connector (12-pin). • Is there continuity between the following connectors? — Auto leveling control unit (main) connector (terminal I) and headlight (LH) connector (terminal 1F) — Auto leveling control unit (sub) connector (terminal P) and headlight (RH) connector (terminal 1F)	Yes	Go to next step.
		No	Possible cause is an open circuit in headlight. Replace headlight (LH) or headlight (RH). (See T–26 FRONT COMBINATION LIGHT REMOVAL/INSTALLATION)
3	**INSPECT WIRING HARNESS BETWEEN HEADLIGHT (LH) CONNECTOR AND HEADLIGHT (RH) CONNECTOR** • Disconnect headlight (LH) connector (12-pin) and headlight (RH) connector (12-pin). • Is there continuity between the following connectors? — Headlight (LH) connector (terminal 1F) and headlight (RH) connector (terminal 1F)	Yes	Repair auto leveling control unit (main). (See T–30 DISCHARGE HEADLIGHT CONTROL UNIT REMOVAL/INSTALLATION)
		No	Repair or replace wiring harness between headlight (LH) and headlight (RH).

DTC B2607

A6E816467000W06

DTC B2607	Auto leveling control unit controlling system.
DETECTION CONDITION	**Warning** • **incorrect servicing of the auto leveling control unit could result in electrical shock because the unit is integrated with the discharge headlight control unit. Before servicing the auto leveling control unit, always refer to "Discharge headlight service warnings." (See T–25 DISCHARGE HEADLIGHT SERVICE WARNINGS)** Operation of auto leveling control unit (main) and auto leveling control unit (sub) are reversed.
POSSIBLE CAUSE	• Mounting of auto leveling control unit (main) and auto leveling control unit (sub) changed • Poor fit of auto leveling control unit • Headlight malfunction • Open or short circuit in wiring harness between auto leveling sensors and headlight (LH)

DIAGNOSTIC PROCEDURE FOR HEADLIGHT (LH)

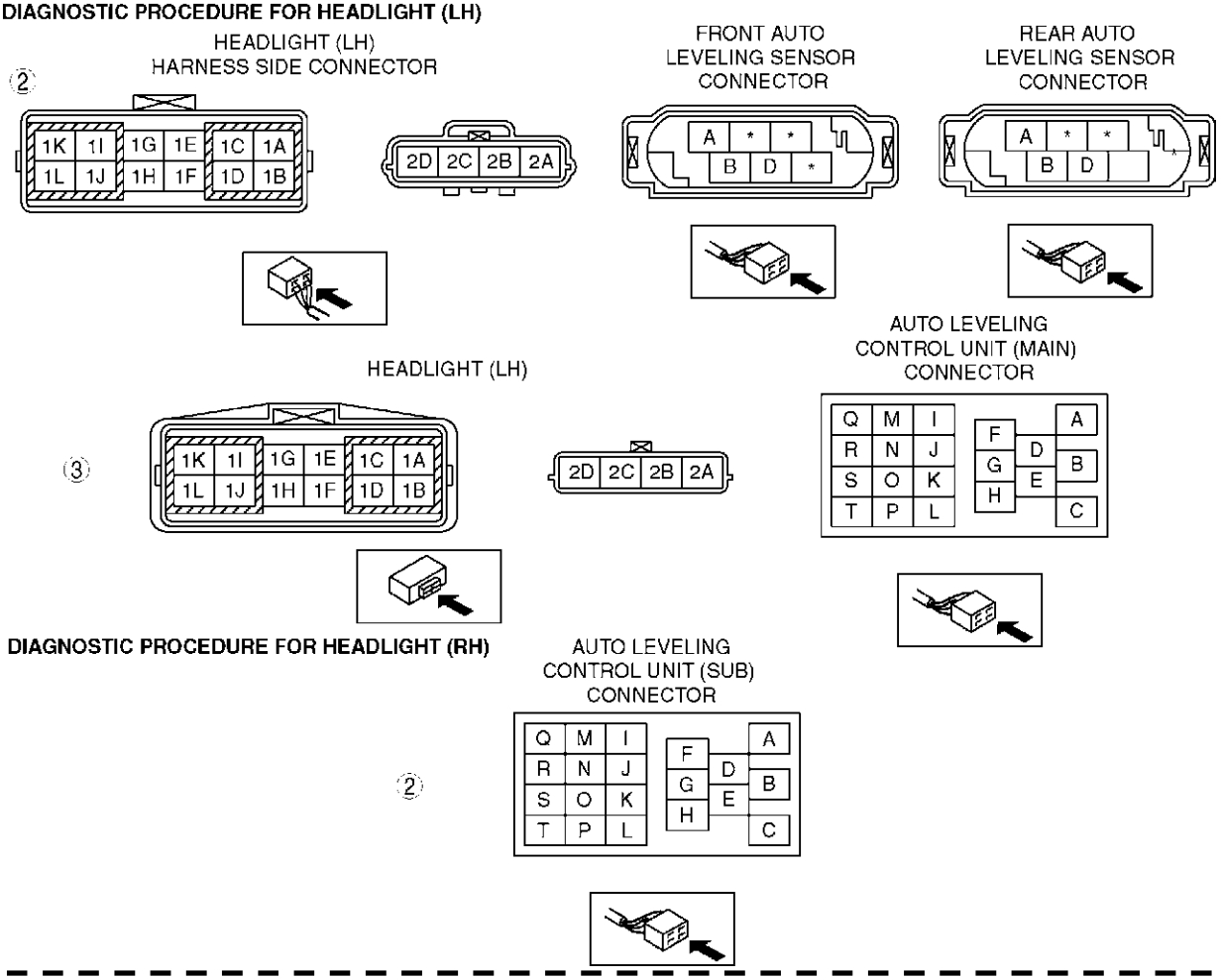

Remark: In this case other DTCs can be reported for wrong side.

T

Diagnostic procedure for headlight (LH)

STEP	INSPECTION		ACTION
1	**INSPECT CONNECTION** • Check fit of auto leveling control unit and fit of connectors. • Is fit okay?.	Yes	Go to next step.
		No	After correcting fit, clear DTC and check DTC again. • If DTC is displayed again, go to next step.
2	**INSPECT WIRING HARNESS BETWEEN AUTO LEVELING SENSOR CONNECTORS AND HEADLIGHT (LH) CONNECTOR** • Disconnect front and rear auto leveling sensor connector (6-pin) and headlight (LH) connector (4-pin). • Is there no continuity between the following connectors? — Headlight (LH) connector (terminal 2C) and front auto leveling sensor connector (terminal A) — Headlight (LH) connector (terminal 2D) and front auto leveling sensor connector (terminal D)	Yes	Go to next step.
		No	Repair or replace wiring harness between front auto leveling sensor and headlight (LH).
3	**INSPECT HEADLIGHT (LH)** • Disconnect auto leveling control unit (main) connector (20-pin) and headlight (LH) connector (4-pin). • Is there no continuity between the following connectors? — Headlight (LH) connector (terminal 2B) and auto leveling control unit (main) connector (terminal H) — Headlight (LH) connector (terminal 2A) and auto leveling control unit (main) connector (terminal F)	Yes	Clear DTC and check DTC again. • If DTC is displayed again, replace auto leveling control unit. (See T–30 DISCHARGE HEADLIGHT CONTROL UNIT REMOVAL/INSTALLATION)
		No	Replace headlight (LH). (See T–26 FRONT COMBINATION LIGHT REMOVAL/INSTALLATION)

Diagnostic procedure for headlight (RH)

STEP	INSPECTION		ACTION
1	**INSPECT CONNECTION** • Check fit of auto leveling control unit. • Is fit okay?.	Yes	Go to next step.
		No	After correcting fit, clear DTC and check DTC again. • If DTC is displayed again, go to next step.
2	**INSPECT HEADLIGHT (RH)** • Disconnect auto leveling control unit (sub) connector (20-pin). • Is there no continuity between the following connectors? — Terminals F and K	Yes	Clear DTC and check DTC again. • If DTC is displayed again, replace auto leveling control unit. (See T–30 DISCHARGE HEADLIGHT CONTROL UNIT REMOVAL/INSTALLATION)
		No	Replace headlight (LH). (See T–26 FRONT COMBINATION LIGHT REMOVAL/INSTALLATION)

DTC B2615

A6E816467000W07

DTC B2615	Front or rear auto leveling sensors power supply system.
DETECTION CONDITION	**Warning** • **incorrect servicing of the auto leveling control unit could result in electrical shock because the unit is integrated with the discharge headlight control unit. Before servicing the auto leveling control unit, always refer to "Discharge headlight service warnings." (See T–25 DISCHARGE HEADLIGHT SERVICE WARNINGS)** Front auto leveling sensor or rear auto leveling sensor supply voltage (5 V), which is generated by auto leveling control unit (main), is incorrect.
POSSIBLE CAUSE	• Front auto leveling sensor malfunction • Rear auto leveling sensor malfunction • Auto leveling control unit malfunction • Short circuit in wiring harness between front auto leveling sensor and headlight (LH) • Short circuit in wiring harness between rear auto leveling sensor and headlight (LH) • Headlight (LH) malfunction

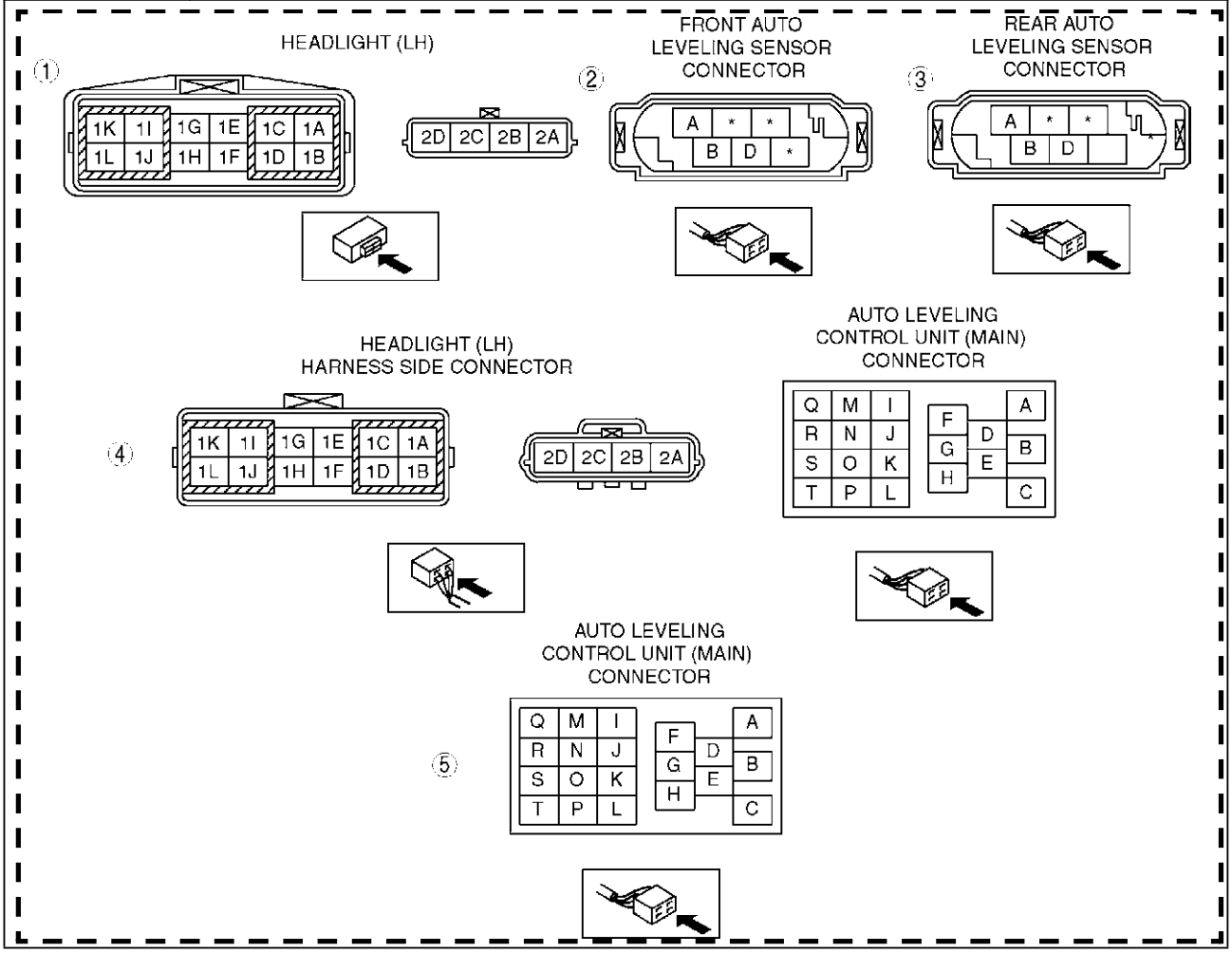

Diagnostic procedure

STEP	INSPECTION		ACTION
1	**INSPECT POWER SUPPLY CIRCUIT OF HEADLIGHT (LH)** • Disconnect headlight (LH) connector (4-pin). • Turn the ignition switch to ON. • Measure voltage at headlight (LH) connector terminal 2A. • Is voltage **approximately 5 V**?	Yes	Go to next step.
		No	Go to step 4.
2	**INSPECT POWER SUPPLY CIRCUIT OF FRONT AUTO LEVELING SENSOR** • Turn the ignition switch to OFF and connect headlight (LH) connector (4-pin) again. • Disconnect front auto leveling sensor connector (6-pin). • Measure voltage at front auto leveling sensor connector terminal D. • Is voltage **approximately 5 V**?	Yes	Replace front auto leveling sensor. (See T–32 FRONT AUTO LEVELING SENSOR REMOVAL/INSTALLATION) After replacement, clear DTC and check DTC again. • If DTC is displayed again, go to next step.
		No	Repair or replace wiring harness between front auto leveling sensor and headlight (LH).
3	**INSPECT POWER SUPPLY CIRCUIT OF REAR AUTO LEVELING SENSOR** • Disconnect rear auto leveling sensor connector. • Measure voltage at rear auto leveling sensor connector terminal D. • Is voltage **approximately 5 V**?	Yes	Replace front auto leveling sensor. (See T–32 REAR AUTO LEVELING SENSOR REMOVAL/INSTALLATION) After replacement, clear DTC and check DTC again. • If DTC is displayed again, go to next step.
		No	Repair or replace wiring harness between rear auto leveling sensor and headlight (LH).
4	**INSPECT HEADLIGHT (LH)** • Disconnect auto leveling control unit (main) connector (20-pin) and headlight (LH) connector (4-pin). • Is there continuity between the following connectors? — Auto leveling control unit (main) connector (terminal K) and headlight (LH) connector (terminal 2A)	Yes	Go to next step.
		No	Possible cause is an open circuit in headlight (LH). Replace headlight (LH). (See T–26 FRONT COMBINATION LIGHT REMOVAL/INSTALLATION)
5	**INSPECT HEADLIGHT (LH)** • Disconnect auto leveling control unit (main) connector (20-pin). • Is there no continuity between the following connectors? — Terminals K and E — Terminals K and D — Terminals K and L	Yes	Replace auto leveling control unit. (See T–30 DISCHARGE HEADLIGHT CONTROL UNIT REMOVAL/INSTALLATION)
		No	Possible cause is an open circuit in headlight (LH). Replace headlight (LH). (See T–26 FRONT COMBINATION LIGHT REMOVAL/INSTALLATION)

DTC B2616

A6E816467000W08

DTC B2616	Front auto leveling sensor signal system.
DETECTION CONDITION	**Warning** • **incorrect servicing of the auto leveling control unit could result in electrical shock because the unit is integrated with the discharge headlight control unit. Before servicing the auto leveling control unit, always refer to "Discharge headlight service warnings." (See T–25 DISCHARGE HEADLIGHT SERVICE WARNINGS)** Output signal is not sent from the front auto leveling sensor.
POSSIBLE CAUS	• Front auto leveling sensor malfunction • Open or short circuit in wiring harness between front auto leveling sensor and headlight (LH) • Headlight (LH) malfunction

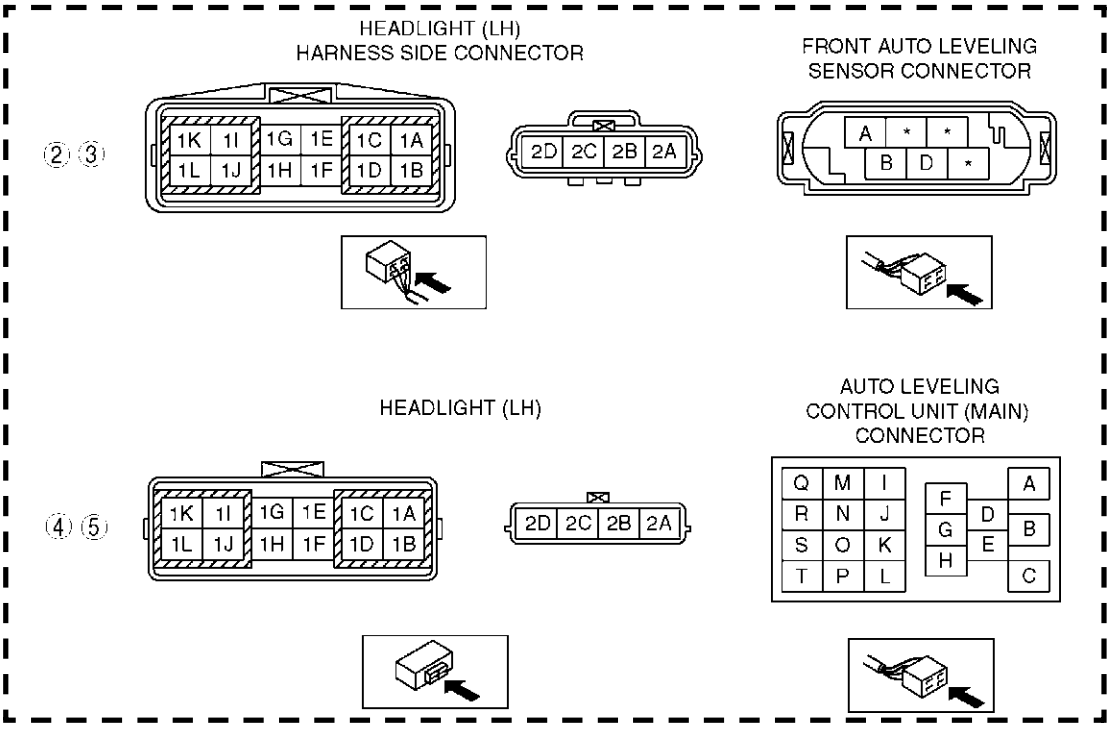

T

Diagnostic procedure

STEP	INSPECTION		ACTION
1	**INSPECT FRONT LEVELING SENSOR CONNECTION** • Check installation condition of front auto leveling sensor and fit of connector. • Are installation condition and fit okay?	Yes	Go to next step.
		No	After correcting fit, clear DTC and check DTC again. • If DTC is displayed again, go to next step.
2	**INSPECT WIRING HARNESS BETWEEN FRONT AUTO LEVELING SENSOR CONNECTOR AND HEADLIGHT (LH) CONNECTOR** • Disconnect front auto leveling sensor connector (6-pin) and headlight (LH) connector (4-pin). • Is there continuity between the following connectors? — Front auto leveling sensor connector (terminal B) and headlight (LH) connector (terminal 2C)	Yes	Go to next step.
		No	Repair or replace wiring harness between front auto leveling sensor and headlight (LH).
3	**INSPECT WIRING HARNESS BETWEEN FRONT AUTO LEVELING SENSOR CONNECTOR AND HEADLIGHT (LH) CONNECTOR** • Disconnect front auto leveling sensor connector (6-pin) and headlight (LH) connector (4-pin). • Is there no continuity between the following connectors? — Front auto leveling sensor connector (terminal B) and headlight (LH) connector (terminal 2B) — Front auto leveling sensor connector (terminal B) and headlight (LH) connector (terminal 2A)	Yes	Go to next step.
		No	Repair or replace wiring harness between front auto leveling sensor and headlight (LH).
4	**INSPECT HEADLIGHT (LH)** • Disconnect auto leveling control unit (main) connector (20-pin) and headlight (LH) connector (4-pin). • Is there continuity between the following connectors? — Auto leveling control unit (main) connector (terminal H) and headlight (LH) connector (terminal 2C)	Yes	Go to next step.
		No	Possible cause is an open circuit in headlight (LH). Replace headlight (LH). (See T–26 FRONT COMBINATION LIGHT REMOVAL/INSTALLATION)
5	**INSPECT HEADLIGHT (LH)** • Disconnect auto leveling control unit (main) connector (20-pin) and headlight (LH) connector (4-pin). • Is there continuity between the following connectors? — Auto leveling control unit (main) connector (terminal G) and headlight (LH) connector (terminal 2C) — Auto leveling control unit (main) connector (terminal K) and headlight (LH) connector (terminal 2C) — Auto leveling control unit (main) connector (terminal E) and headlight (LH) connector (terminal 2C)	Yes	Replace front auto leveling sensor. (See T–32 FRONT AUTO LEVELING SENSOR REMOVAL/INSTALLATION)
		No	Possible cause is an open circuit in headlight (LH). Replace headlight (LH). (See T–26 FRONT COMBINATION LIGHT REMOVAL/INSTALLATION)

DTC B2619

A6E816467000W09

DTC B2619	Rear auto leveling sensor signal system.
DETECTION CONDITION	**Warning** • **incorrect servicing of the auto leveling control unit could result in electrical shock because the unit is integrated with the discharge headlight control unit. Before servicing the auto leveling control unit, always refer to "Discharge headlight service warnings." (See T–25 DISCHARGE HEADLIGHT SERVICE WARNINGS)** Output signal is not sent from the rear auto leveling sensor.
POSSIBLE CAUSE	• Rear auto leveling sensor malfunction • Open or short circuit in wiring harness between rear auto leveling sensor and headlight (LH) • Headlight (LH) malfunction

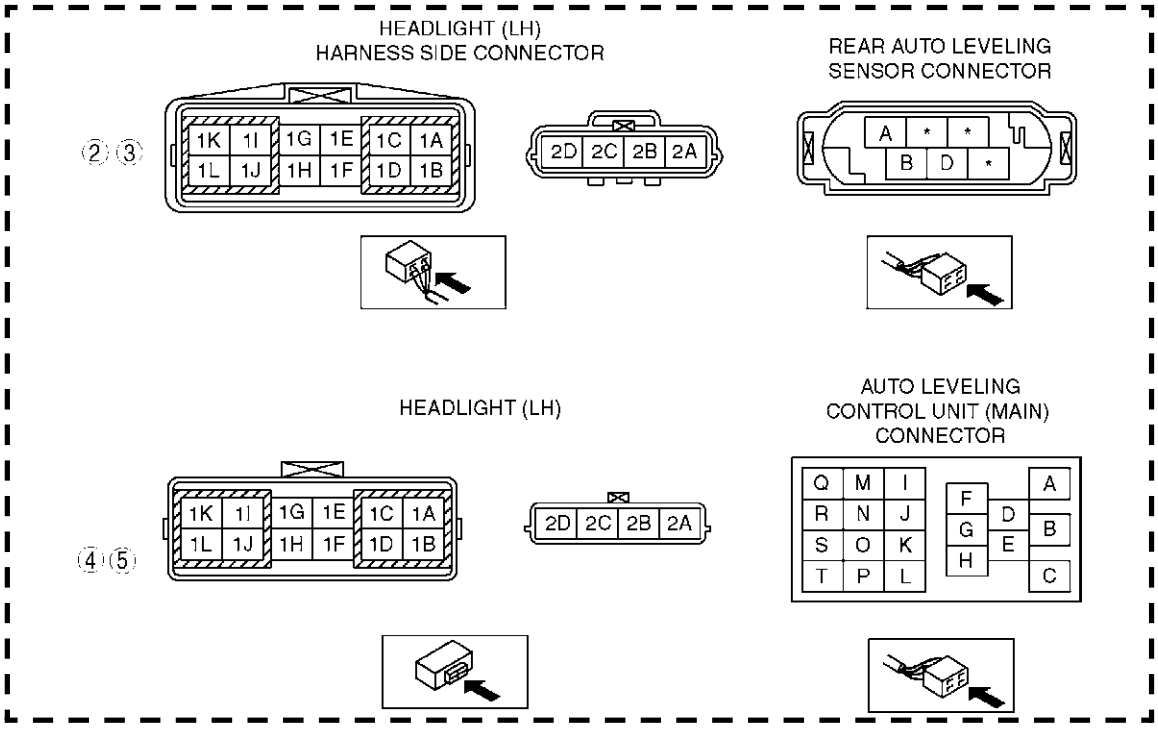

Diagnostic procedure

STEP	INSPECTION		ACTION
1	**INSPECT REAR LEVELING SENSOR CONNECTION** • Check installation condition of rear auto leveling sensor and fit of connector. • Are installation condition and fit okay?	Yes	Go to next step.
		No	After correcting fit, clear DTC and check DTC again. • If DTC is displayed again, go to next step.
2	**INSPECT WIRING HARNESS BETWEEN REAR AUTO LEVELING SENSOR CONNECTOR AND HEADLIGHT (LH) CONNECTOR** • Disconnect rear auto leveling sensor connector (6-pin) and headlight (LH) connector (4-pin). • Is there continuity between the following connectors? — Rear auto leveling sensor connector (terminal B) and headlight (LH) connector (terminal 2D)	Yes	Go to next step.
		No	Repair or replace wiring harness between rear auto leveling sensor and headlight (LH).

T

STEP	INSPECTION		ACTION
3	**INSPECT WIRING HARNESS BETWEEN REAR AUTO LEVELING SENSOR CONNECTOR AND HEADLIGHT (LH) CONNECTOR** • Disconnect rear auto leveling sensor connector (6-pin) and headlight (LH) connector (4-pin). • Is there no continuity between the following connectors? — Rear auto leveling sensor connector (terminal B) and headlight (LH) connector (terminal 2B) — Rear auto leveling sensor connector (terminal B) and headlight (LH) connector (terminal 2A)	Yes	Go to next step.
		No	Repair or replace wiring harness between rear auto leveling sensor and headlight (LH).
4	**INSPECT HEADLIGHT (LH)** • Disconnect auto leveling control unit (main) connector (20-pin) and headlight (LH) connector (4-pin). • Is there continuity between the following connectors? — Auto leveling control unit (main) connector (terminal F) and headlight (LH) connector (terminal 2D)	Yes	Go to next step.
		No	Possible cause is an open circuit in headlight (LH). Replace headlight (LH). (See T–26 FRONT COMBINATION LIGHT REMOVAL/INSTALLATION)
5	**INSPECT HEADLIGHT (LH)** • Disconnect auto leveling control unit (main) connector (20-pin) and headlight (LH) connector (4-pin). • Is there continuity between the following connectors? — Auto leveling control unit (main) connector (terminal G) and headlight (LH) connector (terminal 2D) — Auto leveling control unit (main) connector (terminal K) and headlight (LH) connector (terminal 2D) — Auto leveling control unit (main) connector (terminal E) and headlight (LH) connector (terminal 2D)	Yes	Replace rear auto leveling sensor. (See T–32 REAR AUTO LEVELING SENSOR REMOVAL/INSTALLATION)
		No	Possible cause is an open circuit in headlight (LH). Replace headlight (LH). (See T–26 FRONT COMBINATION LIGHT REMOVAL/INSTALLATION)

DTC B2626, B2477

A6E816467000W10

DTC B2626, B2477	**Headlight zeroset system for auto leveling control unit.**
DETECTION CONDITION	**Warning** • **incorrect servicing of the auto leveling control unit could result in electrical shock because the unit is integrated with the discharge headlight control unit. Before servicing the auto leveling control unit, always refer to "Discharge headlight service warnings." (See T–25 DISCHARGE HEADLIGHT SERVICE WARNINGS)** Headlight zeroset for auto leveling control unit is not set.
POSSIBLE CAUSE	• Headlight zeroset for auto leveling control unit is not set or the setting is invalid

Diagnostic procedure

ACTION
Check connections of each sensor and the unit. Then connect WDS or equivalent and perform headlight zeroset. (See T–31 HEADLIGHT ZEROSET)

DTC B2735

A6E816467000W11

DTC B2735	Headlight leveling actuator signal system.
DETECTION CONDITION	**Warning** • **incorrect servicing of the auto leveling control unit could result in electrical shock because the unit is integrated with the discharge headlight control unit. Before servicing the auto leveling control unit, always refer to "Discharge headlight service warnings." (See T–25 DISCHARGE HEADLIGHT SERVICE WARNINGS)** Output signal to headlight leveling actuator is abnormal.
POSSIBLE CAUSE	• Headlight leveling actuator malfunction • Auto leveling control unit malfunction • Headlight malfunction

Diagnostic procedure

STEP	INSPECTION		ACTION
1	**INSPECT CONNECTOR CONNECTION** • Check fit of auto leveling control unit. • Is condition of the fit okay?	Yes	Possible cause is headlight wiring harness malfunction or malfunctioning headlight leveling acutuator. Replace headlight and go to next step. (See T–26 FRONT COMBINATION LIGHT REMOVAL/INSTALLATION)
		No	After correcting fit, clear DTC and check DTC again. • If DTC is displayed again, go to next step.
2	• Does headlight leveling actuator work properly?	Yes	Troubleshooting completed.
		No	Replace auto leveling control unit. (See T–30 DISCHARGE HEADLIGHT CONTROL UNIT REMOVAL/INSTALLATION)

T

ON-BOARD DIAGNOSTIC [IMMOBILIZER SYSTEM]

FOREWORD

A6E817067000W01

Caution

- **When the engine does not start or stalls and the following DTCs are not indicated, go to engine symptom troubleshooting.**

Note

- When the immobilizer system is defective, the engine cannot be started.
- If engine condition is normal but light stays on, inspect for short circuit between security light. Repair or replace the wiring harness if necessary.

1. Turn the ignition switch to START position **for 2 seconds**, then back to ON position.
2. Wait for **1 minute**.
3. Verify the security light condition and read the DTC if indicated.
4. Verify the DTC with WDS or equivalent.
5. If the DTC is indicated, go to troubleshooting referring to the DTC table.

DTC TABLE

A6E817067000W02

DTC		Security light flashing pattern	Description	Page
WDS or equivalent	Security light			
B1681	11		Coil signal is not received.	(See T–161 DTC B1681)
B2103	12		Coil not connected.	(See T–162 DTC B2103)
B1600	13		ID number signal is not input into PCM.	(See T–163 DTC B1600)
B2431			Transponder programming failure.	(See T–163 DTC B2431)
B1602	14		PCM received invalid format of ID number from transponder.	(See T–163 DTC B1602)
B1601	15		PCM received incorrect ID number from transponder.	(See T–164 DTC B1601)
B1213	21		Number of valid keys is below minimum.	(See T–164 DTC B1213)
B1342	—	—	PCM is defective.	(See T–164 DTC B1342)

Note

- Perform the following if the security light stays on:
  - — If gasoline engine stalls, go to symptom troubleshooting NO.11 “ENGINE STALLS/QUITS, ENGINE RUNS ROUGH, MISSES, BUCK/JERK, HESITATION/STUMBLE, SURGES” in. (See F–204 NO.11 ENGINE STALLS/QUITS, ENGINE RUNS ROUGH, MISSES, BUCK/JERK, HESITATION/STUMBLE, SURGES.)
  - — If gasoline engine won’t start, go to symptom troubleshooting NO.6 “CRANKS NORMALLY BUT WILL NOT START” in. (See F–195 NO.6 CRANKS NORMALLY BUT WILL NOT START.)
  - — If engine condition is normal but light stays on, inspect for continuity between the following wiring harness and body ground: security light and PCM connector terminal 2W. Repair or replace the wiring harness.

DTC B1681

A6E817067000W03

DTC B1681	Coil signal is not received.
POSSIBLE CAUSE	• Defective coil • Defective PCM • Defective wiring harness

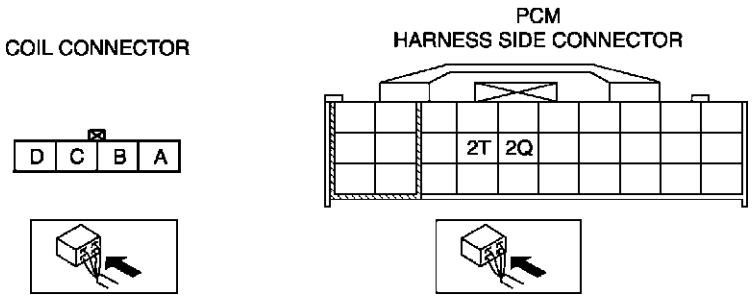

Diagnostic procedure

STEP	INSPECTION		ACTION
1	**INSPECT POWER SUPPLY CIRCUIT OF COIL** • Disconnect coil connector. • Turn ignition switch to ON position. • Measure voltage at terminal D of coil connector. • Is voltage **more than 10 V**?	Yes	Go to next step.
		No	Repair wiring harness.
2	**INSPECT WIRING HARNESS BETWEEN COIL AND GROUND** • Turn ignition switch to OFF position. • Inspect wiring harness between coil connector terminal C and ground for following. — Short to power supply — Open circuit • Is wiring harness okay?	Yes	Go to next step.
		No	Repair wiring harness.
3	**INSPECT COIL INPUT SIGNAL CIRCUIT** • Connect coil connector. • Turn ignition switch to ON position. • Measure voltage at terminal B of coil connector. • Is voltage **more than 9 V**?	Yes	Go to Step 5.
		No	Go to next step.
4	**INSPECT COIL INPUT SIGNAL CIRCUIT** • Turn ignition switch to OFF position. • Disconnect coil connector. • Measure resistance between coil connector terminal B and ground. • Is resistance **more than 10 kilohms**?	Yes	Go to Step 12.
		No	Repair wiring harness.
5	**INSPECT COMMUNICATION CIRCUIT (INPUT) FOR CONTINUITY** • Disconnect coil and PCM connectors. • Is there continuity between coil connector terminal B and PCM terminal 2T?	Yes	Go to next step.
		No	Repair wirimg harness.

T

STEP	INSPECTION		ACTION
6	**INSPECT COIL OUTPUT SIGNAL CIRCUIT** • Connect coil and PCM connectors. • Turn ignition switch to ON position. • Measure voltage at terminal A of coil connector. • Is voltage **more than 9 V**?	Yes	Go to Step 10.
		No	Go to next step.
7	**INSPECT COIL OUTPUT SIGNAL CIRCUIT** • Turn ignition switch to OFF position. • Disconnect PCM connector. • Measure resistance between PCM connector terminal 2Q and ground. • Is resistance **more than 10 kilohms**?	Yes	Go to Step 9.
		No	Go to next step.
8	**INSPECT COIL OUTPUT SIGNAL CIRCUIT FOR SHORT TO GND** • Disconnect coil connector. • Measure resistance between coil connector terminal A and ground. • Is resistance **more than 10 kilohms**?	Yes	Replace coil. (See T–90 COIL REMOVAL/INSTALLATION)
		No	Repair wiring harness.
9	**INSPECT COMMUNICATION CIRCUIT (OUTPUT) FOR CONTINUITY** • Disconnect coil and PCM connectors. • Is there continuity between coil connector terminal A and PCM terminal 2Q?	Yes	Replace PCM and reprogram immobilizer system. (See T–90 IMMOBILIZER SYSTEM REPROGRAM PROCEDURE)
		No	Repair wirimg harness.
10	**INSPECT COMMUNICATION CIRCUIT (OUTPUT) FOR CONTINUITY** • Disconnect coil and PCM connectors. • Is there continuity between coil connector terminal A and PCM terminal 2Q?	Yes	Replace coil. (See T–90 COIL REMOVAL/INSTALLATION)
		No	Go to next step.
11	**INSPECT COIL OUTPUT CIRCUIT FOR SHORT TO POWER SUPPLY** • Disconnect coil connector. • Measure voltage at terminal A of coil connector. • Is there voltage?	Yes	Repair wirimg harness.
		No	Replace PCM and reprogram immobilizer system. (See T–90 IMMOBILIZER SYSTEM REPROGRAM PROCEDURE)
12	**INSPECT PCM** • Turn ignition switch from LOCK position to START position **for 2 seconds**. • Does security light indicate DTC B1681 again?	Yes	Replace PCM and reprogram immobilizer system. (See T–90 IMMOBILIZER SYSTEM REPROGRAM PROCEDURE)
		No	Troubleshooting is completed.

DTC B2103

A6E817067000W04

DTC B2103	**Coil not connected.**
POSSIBLE CAUSE	• Defective Coil • Poor connection of coil connector

Diagnostic procedure

STEP	INSPECTION		ACTION
—	**INSPECT CONNECTOR CONNECTION** • Is connector of coil and PCM connected securely?	Yes	Replace coil. (See T–90 COIL REMOVAL/INSTALLATION)
		No	Connect connector securely.

DTC B1600

A6E817067000W05

DTC B1600	ID number is not input into PCM.
POSSIBLE CAUSE	• No transponder in the key • Defective transponder in the key (ID number is not output.)

Diagnostic procedure

STEP	INSPECTION		ACTION
1	**REPROGRAM NEW KEY** • Register new key. (See T–90 IMMOBILIZER SYSTEM REPROGRAM PROCEDURE) • Clear DTCs with WDS or equivalent. • Turn ignition switch to ON position with new key. **Note** • Two or more valid keys are held in a manner of not interfering each other. • Does security light indicate DTC B1600 again?	Yes	Go to next step.
		No	Immobilizer system is okay.
2	**INSPECT FOR OTHER PROPER KEYS** • Does engine start with other proper keys?	Yes	Dispose of defective key. Duplicate key if necessary. (See T–90 IMMOBILIZER SYSTEM REPROGRAM PROCEDURE)
		No	Go to next step.
3	**INSPECT PCM** • Turn ignition switch from LOCK position to START position **For 2 seconds**. • Does security light indicate DTC B1600 again?	Yes	Replace PCM and reprogram immobilizer system. (See T–90 IMMOBILIZER SYSTEM REPROGRAM PROCEDURE)
		No	Troubleshooting is completed.

DTC B2431

A6E817067000W06

DTC B2431	ID number programing failure.
POSSIBLE CAUSE	• The procedure fails to program the transponder into PCM

Diagnostic procedure

STEP	INSPECTION		ACTION
—	—	—	Go to ID number input procedure. (See T–90 IMMOBILIZER SYSTEM REPROGRAM PROCEDURE)

DTC B1602

A6E817067000W07

DTC B1602	PCM received invalid format of ID number from key (transponder)
POSSIBLE CAUSE	• Defective transponder in the key • Defective coil • Defective PCM

Diagnostic procedure

STEP	INSPECTION		ACTION
1	**INSPECT FOR OTHER PROPER KEYS** • Does engine start with other proper keys?	Yes	Dispose of defective key. Duplicate key if necessary. (See T–90 IMMOBILIZER SYSTEM REPROGRAM PROCEDURE)
		No	Go to next step.
2	**INSPECT COIL** • Replace coil. (See T–90 COIL REMOVAL/ INSTALLATION) • Does engine start?	Yes	Coil was defective.
		No	Replace PCM and reprogram immobilizer system. (See T–90 IMMOBILIZER SYSTEM REPROGRAM PROCEDURE)

T

DTC B1601

A6E817067000W08

DTC B1601	PCM received incorrect ID number from key (transponder).
POSSIBLE CAUSE	• Defective transponder in the key

Diagnostic procedure

STEP	INSPECTION		ACTION
—	**INSPECT KEYS** • Turn ignition switch to ON position with first encoded key for **3 seconds**. • Turn ignition switch to ON position with second encoded key for **3 seconds**. • Turn ignition switch to START position with second encoded key. • Does engine start?	Yes	Immobilizer system is okay.
		No	Replace PCM and reprogram immobilizer system. (See T–90 IMMOBILIZER SYSTEM REPROGRAM PROCEDURE)

DTC B1213

A6E817067000W09

DTC B1213	Number of valid keys is below minimum.
POSSIBLE CAUSE	• Less than two valid keys

Diagnostic procedure

STEP	INSPECTION		ACTION
—	**REPROGRAM NEW KEY** • Register new key. (See T–90 IMMOBILIZER SYSTEM REPROGRAM PROCEDURE) **Note** • Two or more valid keys are necessary to start engine. • After reprogramming, does the security light illuminate for **approximately 3 seconds** and then go out?	Yes	Troubleshooting is completed.
		No	Reprogram immobilizer system again.

DTC B1342

A6E817067000W10

DTC B1342	PCM is defective
POSSIBLE CAUSE	• Defective PCM

Diagnostic procedure

STEP	INSPECTION		ACTION
—	**INSPECT PCM** • Clear DTCs with WDS or equivalent. • Does security light indicate DTC B1342 again.	Yes	Replace PCM and reprogram immobilizer system. (See T–90 IMMOBILIZER SYSTEM REPROGRAM PROCEDURE)
		No	Connect connectors properly.

ON-BOARD DIAGNOSTIC [AUDIO]

STARTING PROCEDURE FOR ON-BOARD DIAGNOSTIC TEST MODE

A6E817566900W01

Note
- All DTCs displayed in the on-board diagnostic test mode should be entered in the Audio Repair Order Form.

1. Turn the ignition switch to the ACC or ON position.
2. First press the POWER button, then simultaneously press the AM button and TAPE/MD button for **2 seconds or more**.

1	AM button
2	TAPE/MD button
3	SEEK button (type A)
4	SEEK button (type B)
5	POWER button (type A)
6	POWER button (type B)

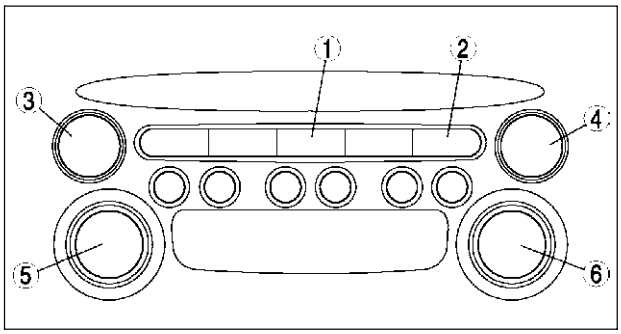

A6E8175W010

Note
- If several DTCs are in the memory, they can be displayed by the SEEK button.

3. To stop the on-board diagnostic test mode, turn the ignition switch to the LOCK position.

SUPPLIER IDENTIFICATION PROCEDURE

A6E817566900W02

Note
- When asking the supplier (service center) for repair or replacement, verify which supplier the module belongs to and enter in the Audio Repair Order Form.

T

Identification With Printed Numbers/Label

1. Remove the audio unit.
2. Verify the supplier name written on the label attached on each module.

Identification With On-board Diagnostic Test Mode

1. Start the on-board diagnostic test mode.
2. Verify the part number and supplier code displayed in the LCD.

Note
- When no DTCs are in the memory, part numbers and supplier codes will not be displayed.

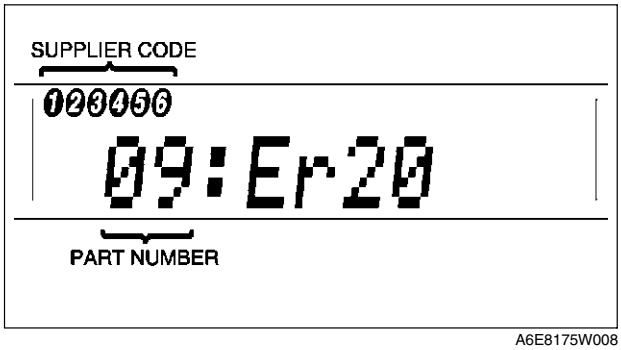

A6E8175W008

Part number	Part name
00	Cassette deck (lower module)
03	CD player (upper module)
05	CD changer (external type)
06	CD changer (upper module)
07	MD player (lower module)
09	Base unit

Supplier code	Supplier name
1	FMS Audio
2	Panasonic
3	Clarion

DTC CLEARING PROCEDURE

A6E817566900W03

1. Start the on-board diagnostic test mode.
2. First press the POWER button, then simultaneously press AUDIO CONT button for **2 seconds or more**.

1	POWER button (type A)
	AUDIO CONT button (type B)
2	AUDIO CONT button (type A)
	POWER button (type B)

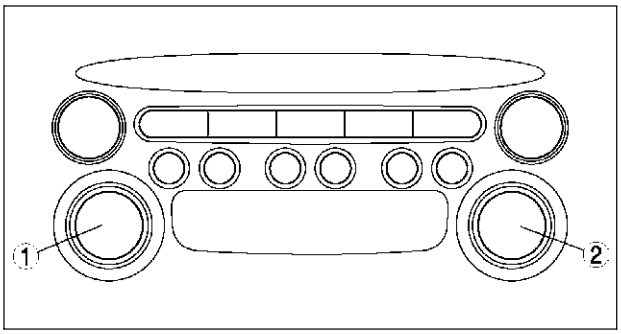

A6E8175W009

Caution

- **Before clearing the DTCs, be sure to enter all of them displayed in the on-board diagnostic test mode in the Audio Repair Order Form.**

3. To stop the on-board diagnostic test mode, turn the ignition switch to the LOCK position.

DTC TABLE

A6E817566900W04

Screen display		Malfunction location	Page
DTC	Output signal		
09:Er22	—	Base unit (peripheral circuit)	(See T–166 DTC 09:ER22)
09:Er20	—	Power supply circuit of base unit	(See T–167 DTC 09:ER20)
00:Er10	—	Cassette deck—base unit communication line	(See T–168 DTC 00:ER10)
03:Er10	—	CD player—base unit communication line	(See T–168 DTC 03:ER10)
05:Er10	—	CD changer (external type)—base unit communication line	(See T–169 DTC 05:ER10)
06:Er10	—	CD changer (upper module)—base unit communication line	(See T–169 DTC 06:ER10)
07:Er10	—	MD player—base unit communication line	(See T–170 DTC 07:ER10)
03:Er01	—	CD player	(See T–170 DTC 03:ER01)
03:Er02	CHECK*1 CD*2	CD player	(See T–170 DTC 03:ER02)
03:Er07	CHECK*1 CD*2	CD player	(See T–171 DTC 03:ER07)
00:Er01	—	Cassette deck	(See T–171 DTC 00:ER01)
00:Er03	—	Cassette deck	(See T–172 DTC 00:ER03)
00:Er04	CHECK*1 TAPE*2	Cassette tape	(See T–172 DTC 00:ER04)
05:Er01	—	CD changer (external type)	(See T–172 DTC 05:ER01)
05:Er07	CHECK*1 CD*2	CD changer (external type)	(See T–173 DTC 05:ER07)
06:Er01	—	CD changer (upper module)	(See T–173 DTC 06:ER01)
06:Er02	CHECK*1 CD*2	CD changer (upper module)	(See T–174 DTC 06:ER02)
06:Er07	CHECK*1 CD*2	CD changer (upper module)	(See T–174 DTC 06:ER07)
07:Er01	—	MD player	(See T–175 DTC 07:ER01)
07:Er02	CHECK*1 MD*2	MD player	(See T–175 DTC 07:ER02)
07:Er07	CHECK*1 MD*2	MD player	(See T–176 DTC 07:ER07)
NO Err	—	No stored DTCs	—

*1,*2: When an error occurs, the error messages are displayed three times in the order of *1 and *2, respectively.

DTC 09:ER22

A6E817566900W05

DTC 09:Er22	Base unit (peripheral circuit)
DETECTION CONDITION	• Base unit detects malfunction in its inner circuit (related to tuner).
POSSIBLE CAUSE	• Base unit malfunction

Diagnostic procedure

INSPECTION		ACTION
INSPECT BASE UNIT • Clear DTC. • Turn on radio and operate it for **3 seconds or more**. • Start on-board diagnostic test mode. • Is DTC 09:Er22 displayed?	Yes	Replace base unit.
	No	Troubleshooting completed.

DTC 09:ER20

A6E817566900W06

DTC 09:Er20	Power supply circuit of base unit
DETECTION CONDITION	• Voltage detected at base unit terminals 1B and 1R is **less than 8.5 V**, **or more than 16 V (must not be 16V)**.
POSSIBLE CAUSE	• Weak battery • Malfunction in wiring harness between battery and base unit

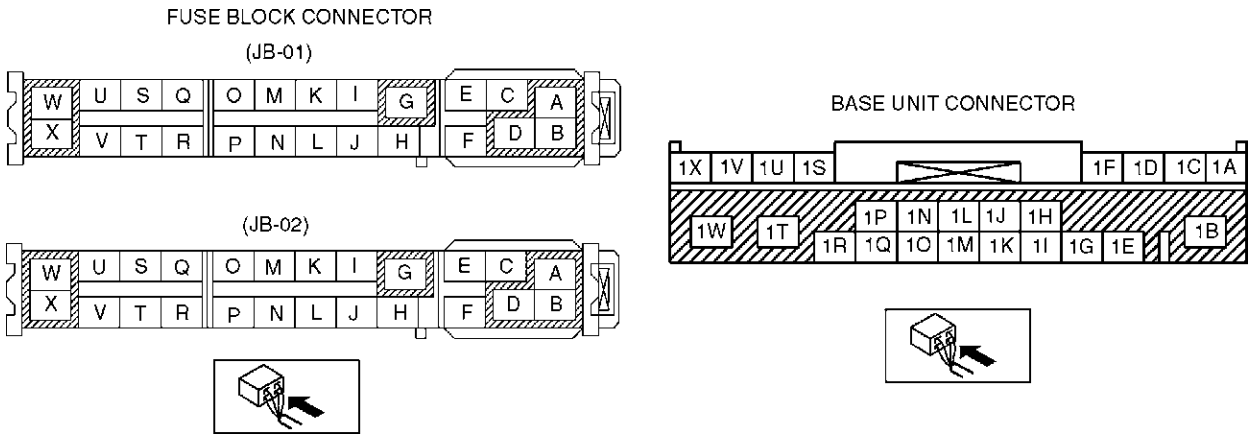

Diagnostic procedure

STEP	INSPECTION		ACTION
1	**INSPECT FUSE** • Remove MIRROR 5 A fuse and ROOM 15 A fuse. • Inspect MIRROR 5 A fuse and ROOM 15 A fuse. • Are fuses okay?	Yes	Go to next step.
		No	Replace fuse.
2	**INSPECT BATTERY** • Measure battery voltage. • Is voltage **8.5 V —16 V**?	Yes	Go to next step.
		No	Battery is weak. • Inspect charge/discharge system.
3	**INSPECT WIRING HARNESS BETWEEN BATTERY AND FUSE BLOCK** • Turn ignition switch to ACC position. • Measure voltage at fuse block connector (JB-01) terminals B and fuse block connector (JB-02) terminals D. • voltage **8.5 V —16 V**?	Yes	Go to next step.
		No	Repair wiring harness between battery and fuse block.
4	**INSPECT WIRING HARNESS BETWEEN FUSE BLOCK AND BASE UNIT** • Install MIRROR 5 A fuse and ROOM 15 A fuse. • Measure voltage at base unit connector terminals 1B and 1R. • Is voltage **8.5 V —16 V**?	Yes	Go to next step.
		No	Repair wiring harness between fuse block and base unit.
5	**INSPECT BASE UNIT** • Clear DTC. • Turn ignition switch to ACC or ON position and hold for **30 seconds or more**. • Start on-board diagnostic test mode. • Is DTC 09:Er20 displayed?	Yes	Replace base unit.
		No	Troubleshooting completed.

T

DTC 00:ER10

A6E817566900W07

DTC 00:Er10	Cassette deck—base unit communication line
DETECTION CONDITION	• Base unit detects communication error with cassette deck.
POSSIBLE CAUSE	• Malfunction of connectors between base unit and cassette deck • Cassette deck malfunction • Base unit malfunction

Diagnostic procedure

STEP	INSPECTION		ACTION
1	**INSPECT CONNECTOR** • Remove cassette deck and inspect connector for the following. — Deformation of pin — Poor connection of female terminal — Pinching of foreign material • Is connector okay?	Yes	Go to next step.
		No	Repair connector, then go to next step.
2	**VERIFY THAT CASSETTE DECK IS INSTALLED WITH BASE UNIT** • Install cassette deck and verify its installation condition. • Is cassette deck securely installed?	Yes	Go to next step.
		No	Securely install cassette deck, then go to next step.
3	**INSPECT CASSETTE DECK** • Clear DTC. • Turn ignition switch to ACC or ON position and hold for **3 seconds or more**. • Start on-board diagnostic test mode. • Is DTC 00:Er10 displayed?	Yes	Replace base unit and cassette deck.
		No	Troubleshooting completed.

DTC 03:ER10

A6E817566900W08

DTC 03:Er10	CD player—base unit communication line
DETECTION CONDITION	• Base unit detects communication error with CD player.
POSSIBLE CAUSE	• Malfunction of connectors between base unit and CD player • CD player malfunction • Base unit malfunction

Diagnostic procedure

STEP	INSPECTION		ACTION
1	**INSPECT CONNECTOR** • Remove CD player and inspect connector for the following. — Deformation of pin — Poor connection of female terminal — Pinching of foreign material • Is connector okay?	Yes	Go to next step.
		No	Repair connector, then go to next step.
2	**VERIFY THAT CD PLAYER IS INSTALLED WITH BASE UNIT** • Install CD player and verify its installation condition. • Is CD player securely installed?	Yes	Go to next step.
		No	Securely install CD player, then go to next step.
3	**INSPECT CD PLAYER** • Clear DTC. • Turn ignition switch to ACC or ON position and hold for **3 seconds or more**. • Start on-board diagnostic test mode. • Is DTC 03:Er10 displayed?	Yes	Replace base unit and CD player.
		No	Troubleshooting completed.

DTC 05:ER10

A6E817566900W09

DTC 05:Er10	CD changer (external type)—base unit communication line
DETECTION CONDITION	• Base unit detects communication error with CD changer (external type).
POSSIBLE CAUSE	• Malfunction of connectors between base unit and CD changer (external type) • CD changer (external type) malfunction • Base unit malfunction

Diagnostic procedure

STEP	INSPECTION		ACTION
1	**INSPECT CONNECTOR** • Inspect base unit and CD changer (external type) connectors for connection. • Are connectors securely connected?	Yes	Go to next step.
		No	Reconnect connector, then go to next step.
2	**INSPECT WIRING HARNESS BETWEEN CD CHANGER (EXTERNAL TYPE) AND BASE UNIT** • Inspect wiring harness between base unit and CD changer (external type). • Is wiring harness okay?	Yes	Go to next step.
		No	Securely install CD changer (external type), then go to next step.
3	**INSPECT CD CHANGER (EXTERNAL TYPE)** • Clear DTC. • Turn ignition switch to ACC or ON position and hold for **3 seconds or more**. • Start on-board diagnostic test mode. • Is DTC 05:Er10 displayed?	Yes	Replace base unit and CD changer (external type).
		No	Troubleshooting completed.

DTC 06:ER10

A6E817566900W10

DTC 06:Er10	CD changer (upper module)—base unit communication line
DETECTION CONDITION	• Base unit detects communication error with CD changer (upper module).
POSSIBLE CAUSE	• Malfunction of connectors between base unit and CD changer (upper module) • CD changer (upper module) malfunction • Base unit malfunction

Diagnostic procedure

STEP	INSPECTION		ACTION
1	**INSPECT CONNECTOR** • Remove CD changer (upper module) and inspect connector for the following. — Deformation of pin — Poor connection of female terminal — Pinching of foreign material • Is connector okay?	Yes	Go to next step.
		No	Repair connector, then go to next step.
2	**VERIFY THAT CD CHANGER (UPPER MODULE) IS INSTALLED WITH BASE UNIT** • Install CD changer (upper module) and verify its installation condition. • Is CD changer (upper module) securely installed?	Yes	Go to next step.
		No	Securely install CD changer (upper module), then go to next step.
3	**INSPECT CD CHANGER (UPPER MODULE)** • Clear DTC. • Turn ignition switch to ACC or ON position and hold for **3 seconds or more**. • Start on-board diagnostic test mode. • Is DTC 06:Er10 displayed?	Yes	Replace base unit and CD changer (upper module).
		No	Troubleshooting completed.

T

DTC 07:ER10

A6E817566900W11

DTC 07:Er10	MD player—base unit communication line
DETECTION CONDITION	• Base unit detects communication error with MD player.
POSSIBLE CAUSE	• Malfunction of connectors between base unit and MD player • MD player malfunction • Base unit malfunction

Diagnostic procedure

STEP	INSPECTION		ACTION
1	**INSPECT CONNECTOR** • Remove MD player and inspect connector for the following. — Deformation of pin — Poor connection of female terminal — Pinching of foreign material • Is connector okay?	Yes	Go to next step.
		No	Repair connector, then go to next step.
2	**VERIFY THAT MD PLAYER IS INSTALLED WITH BASE UNIT** • Install MD player and verify its installation condition. • Is MD player securely installed?	Yes	Go to next step.
		No	Securely install MD player, then go to next step.
3	**INSPECT MD PLAYER** • Clear DTC. • Turn ignition switch to ACC or ON position and hold for **3 seconds or more**. • Start on-board diagnostic test mode. • Is DTC 07:Er10 displayed?	Yes	Replace base unit and MD player.
		No	Troubleshooting completed.

DTC 03:ER01

A6E817566900W12

DTC 03:Er01	CD player
DETECTION CONDITION	• CD player cannot implement insert and eject commands.
POSSIBLE CAUSE	• Defective CD (broken or foreign material stuck/attached) • CD player malfunction

Diagnostic procedure

STEP	INSPECTION		ACTION
1	• Is CD able to be ejected?	Yes	Go to next step.
		No	Replace CD player.
2	**INSPECT CD** • Inspect condition of CD where error has occurred. • Is CD okay?	Yes	Go to next step.
		No	Repair (remove foreign material) or replace CD, then go to next step.
3	**INSPECT CD PLAYER** • Clear DTC. • Insert and eject CD with no defect. • Start on-board diagnostic test mode. • Is DTC 03:Er01 displayed?	Yes	Replace CD player.
		No	Troubleshooting completed.

DTC 03:ER02

A6E817566900W13

DTC 03:Er02	CD player
DETECTION CONDITION	**Note** • When error occurs, error message “CHECK CD” is displayed in the LCD. • Cannot play CD normally or change tracks.
POSSIBLE CAUSE	• Defective CD (scratches or dirt) • CD player malfunction

Diagnostic procedure

STEP	INSPECTION		ACTION	
1	**VERIFY WHETHER MALFUNCTION IS IN CD PLAYER OR CD** • Play CD and select other song (change tracks). • Does CD player change tracks?	Yes	Go to Step 3.	
		No	Not able to change particular tracks.	Go to next step.
			Not able to change any tracks.	Change CD and perform track-change again. • If CD player changes tracks, then go to Step 3. • If not, replace CD player.
2	**INSPECT CD** • Inspect condition of CD where error has occurred. • Is CD okay?	Yes	Go to next step.	
		No	Repair (remove foreign material) or replace CD, then go to next step.	
3	**INSPECT CD PLAYER** • Clear DTC. • Play CD and select other song (change tracks). • Start on-board diagnostic test mode. • Is DTC 03:Er02 displayed?	Yes	Replace CD player.	
		No	Troubleshooting completed.	

DTC 03:ER07

A6E817566900W14

DTC 03:Er07	CD player
DETECTION CONDITION	**Note** • When error occurs, error message “CHECK CD” is displayed in the LCD. • Base unit detects CD reading error.
POSSIBLE CAUSE	• Defective CD (scratches or dirt) • CD player malfunction

Diagnostic procedure

STEP	INSPECTION		ACTION
1	**INSPECT CD** • Inspect condition of CD where error has occurred. • Is CD okay?	Yes	Go to next step.
		No	Repair (remove foreign material) or replace CD, then go to next step.
2	**INSPECT CD PLAYER** • Clear DTC. • Insert and play CD with no defect. • Start on-board diagnostic test mode. • Is DTC 03:Er07 displayed?	Yes	Replace CD player.
		No	Troubleshooting completed.

DTC 00:ER01

A6E817566900W15

DTC 00:Er01	Cassette deck
DETECTION CONDITION	• Cassette deck cannot implement insert and eject commands.
POSSIBLE CAUSE	• Defective cassette tape (deformation, broken, or foreign material stuck/attached) • Cassette deck malfunction

Diagnostic procedure

STEP	INSPECTION		ACTION
1	• Is cassette tape able to be ejected?	Yes	Go to next step.
		No	Replace cassette deck.
2	**INSPECT CASSETTE TAPE** • Inspect condition of cassette tape where error has occurred. • Is cassette tape okay?	Yes	Go to next step.
		No	Repair (remove foreign material) or replace cassette tape, then go to next step.

STEP	INSPECTION		ACTION
3	**INSPECT CASSETTE DECK** • Clear DTC. • Insert and eject cassette tape with no defect. • Start on-board diagnostic test mode. • Is DTC 00:Er01 displayed?	Yes	Replace cassette deck.
		No	Troubleshooting completed.

DTC 00:ER03

A6E817566900W16

DTC 00:Er03	Cassette deck
DETECTION CONDITION	• Base unit detects that reel built into cassette deck does not operate.
POSSIBLE CAUSE	• Defective cassette tape (tape slack, pinched tape in internal cassette deck) • Cassette deck malfunction

Diagnostic procedure

STEP	INSPECTION		ACTION
1	**INSPECT CASSETTE TAPE** • Inspect condition of cassette tape where error has occurred. • Is cassette tape okay?	Yes	Go to next step.
		No	Repair (remove tape slack or repair pinched tape) or replace cassette tape, then go to next step.
2	**INSPECT CASSETTE DECK** • Clear DTC. • Insert cassette tape with no defect. • Play cassette tape for **20 seconds or more**. • Start on-board diagnostic test mode. • Is DTC 00:Er03 displayed?	Yes	Replace cassette deck.
		No	Troubleshooting completed.

DTC 00:ER04

A6E817566900W17

DTC 00:Er04	Cassette tape
DETECTION CONDITION	**Note** • When error occurs, error message “CHECK TAPE” is displayed in the LCD. • Cassette tape is worn out.
POSSIBLE CAUSE	• Tape wear • Cassette deck malfunction

Diagnostic procedure

STEP	INSPECTION		ACTION
1	**INSPECT CASSETTE TAPE** • Inspect condition of cassette tape where error has occurred. • Is cassette tape okay?	Yes	Go to next step.
		No	Replace cassette tape, then go to next step.
2	**INSPECT CASSETTE DECK** • Clear DTC. • Insert cassette tape with no defect. • Play cassette tape for **20 seconds or more**. • Start on-board diagnostic test mode. • Is DTC 00:Er04 displayed?	Yes	Replace cassette deck.
		No	Troubleshooting completed.

DTC 05:ER01

A6E817566900W18

DTC 05:Er01	CD changer (external type)
DETECTION CONDITION	• Changer function does not operate.
POSSIBLE CAUSE	• Defective CD (broken or foreign material) • Magazine malfunction • CD changer (external type) malfunction

Diagnostic procedure

STEP	INSPECTION		ACTION	
1	**VERIFY WHETHER MALFUNCTION IS IN CD CHANGER OR OTHER PARTS** • Operate changer function. • Is function okay?	Yes	Go to Step 4.	
		No	Not able to change particular CD.	Go to next step.
			Not able to change any CD.	Go to Step 3.
2	**INSPECT CD** • Inspect condition of CD where error has occurred. • Is CD okay?	Yes	Go to next step.	
		No	Repair (remove foreign material) or replace CD, then go to next step.	
3	**INSPECT MAGAZINE** • Inspect magazine. • Is magazine okay?	Yes	Go to next step.	
		No	Repair or replace magazine, then go to next step.	
4	**INSPECT CD CHANGER (EXTERNAL TYPE)** • Clear DTC. • Operate changer. • Start on-board diagnostic test mode. • Is DTC 05:Er01 displayed?	Yes	Replace CD changer (external type).	
		No	Troubleshooting completed.	

DTC 05:ER07

A6E817566900W19

DTC 05:Er07	CD changer (external type)
DETECTION CONDITION	**Note** • When error occurs, error message “CHECK CD” is displayed in the LCD. • Base unit detects CD reading error.
POSSIBLE CAUSE	• Defective CD (scratches or dirt) • CD changer (external type) malfunction

Diagnostic procedure

STEP	INSPECTION		ACTION	
1	**VERIFY WHETHER MALFUNCTION IS IN CD CHANGER OR OTHER PARTS** • Play all CD in magazine. • Is CD changer able to read them properly?	Yes	Go to Step 3.	
		No	Not able to change particular CD.	Go to next step.
			Not able to change any CD.	Go to Step 3.
2	**INSPECT CD** • Inspect condition of CD where error has occurred. • Is CD okay?	Yes	Go to next step.	
		No	Repair (remove foreign material) or replace CD, then go to next step.	
3	**INSPECT CD CHANGER (EXTERNAL TYPE)** • Clear DTC. • Insert and play CD with no defect. • Start on-board diagnostic test mode. • Is DTC 05:Er07 displayed?	Yes	Replace CD changer (external type).	
		No	Troubleshooting completed.	

DTC 06:ER01

A6E817566900W20

DTC 06:Er01	CD changer (upper module)
DETECTION CONDITION	• CD changer (upper module) cannot implement insert, eject, and disc change commands.
POSSIBLE CAUSE	• Defective CD (broken or foreign material stuck/attached) • CD changer (upper module) malfunction

Diagnostic procedure

STEP	INSPECTION		ACTION
1	• Is CD able to be ejected?	Yes	Go to next step.
		No	Replace CD changer (upper module).
2	**INSPECT CD** • Inspect condition of CD where error has occurred. • Is CD okay?	Yes	Go to next step.
		No	Repair (remove foreign material) or replace CD, then go to next step.

STEP	INSPECTION		ACTION
3	**INSPECT CD CHANGER (UPPER MODULE)** • Clear DTC. • Insert and eject CD with no defect. • Start on-board diagnostic test mode. • Is DTC 06:Er01 displayed?	Yes	Replace CD changer (upper module).
		No	Troubleshooting completed.

DTC 06:ER02

A6E817566900W21

DTC 06:Er02	CD changer (upper module)
DETECTION CONDITION	**Note** • When error occurs, error message “CHECK CD” is displayed in the LCD. • Cannot play CD normally or change tracks.
POSSIBLE CAUSE	• Defective CD (scratches or dirt) • CD changer (upper module) malfunction

Diagnostic procedure

STEP	INSPECTION		ACTION	
1	**VERIFY WHETHER MALFUNCTION IS IN CD CHANGER (UPPER MODULE) OR CD** • Play all CDs in changer and select other song (change tracks). • Is CD changer able to change tracks?	Yes	Go to Step 3.	
		No	Not able to change particular tracks.	Go to next step.
			Not able to change any tracks.	Change CD and perform track-change again. • If CD changer changes tracks, go to Step 3. • If not, replace CD changer (upper module).
2	**INSPECT CD** • Inspect condition of CD where error has occurred. • Is CD okay?	Yes	Go to next step.	
		No	Repair (remove foreign material) or replace CD, then go to next step.	
3	**INSPECT CD CHANGER (UPPER MODULE)** • Clear DTC. • Play CD and select other song (change tracks). • Start on-board diagnostic test mode. • Is DTC 06:Er02 displayed?	Yes	Replace CD changer (upper module).	
		No	Troubleshooting completed.	

DTC 06:ER07

A6E817566900W22

DTC 06:Er07	CD changer (upper module)
DETECTION CONDITION	**Note** • When error occurs, error message “CHECK CD” is displayed in the LCD. • Base unit detects CD reading error.
POSSIBLE CAUSE	• Defective CD (scratches or dirt) • CD changer (upper module) malfunction

Diagnostic procedure

STEP	INSPECTION		ACTION	
1	**VERIFY WHETHER MALFUNCTION IS IN CD CHANGER (UPPER MODULE) OR CD** • Play all CDs in changer. • Is CD changer able to read them properly?	Yes	Go to Step 3.	
		No	Not able to read particular CD.	Go to next step.
			Not able to read any CD.	Go to Step 3.
2	**INSPECT CD** • Inspect condition of CD where error has occurred. • Is CD okay?	Yes	Go to next step.	
		No	Repair (remove foreign material) or replace CD, then go to next step.	

STEP	INSPECTION		ACTION
3	**INSPECT CD CHANGER (UPPER MODULE)** • Clear DTC. • Insert and play CD for **12 seconds or more**. • Start on-board diagnostic test mode. • Is DTC 06:Er07 displayed?	Yes	Replace CD changer (upper module).
		No	Troubleshooting completed.

DTC 07:ER01

A6E817566900W23

DTC 07:Er01	MD player
DETECTION CONDITION	• MD player cannot implement insert and eject commands.
POSSIBLE CAUSE	• Defective MD (broken or foreign material stuck/attached) • MD player malfunction

Diagnostic procedure

STEP	INSPECTION		ACTION
1	• Is MD able to be ejected?	Yes	Go to next step.
		No	Replace MD player.
2	**INSPECT MD** • Inspect condition of MD where error has occurred. • Is MD okay?	Yes	Go to next step.
		No	Repair (remove foreign material) or replace MD, then go to next step.
3	**INSPECT MD PLAYER** • Clear DTC. • Insert and eject MD with no defect. • Start on-board diagnostic test mode. • Is DTC 07:Er01 displayed?	Yes	Replace MD player.
		No	Troubleshooting completed.

DTC 07:ER02

A6E817566900W24

T

DTC 07:Er02	MD player
DETECTION CONDITION	**Note** • When error occurs, error message “CHECK MD” is displayed in the LCD. • Cannot play MD normally or change tracks.
POSSIBLE CAUSE	• Defective MD (scratches or dirt) • MD player malfunction

Diagnostic procedure

STEP	INSPECTION		ACTION	
1	**VERIFY WHETHER MALFUNCTION IS IN MD PLAYER OR MD** • Play MD and select other song (change tracks). • Is MD player able to change tracks?	Yes	Go to Step 3.	
		No	Not able to change particular tracks.	Go to next step.
			Not able to change any tracks.	Change MD and perform track-change again. • If MD player changes tracks, then go to Step 3. • If not, replace MD player.
2	**INSPECT MD** • Inspect condition of MD where error has occurred. • Is MD okay?	Yes	Go to next step.	
		No	Repair (remove foreign material) or replace MD, then go to next step.	
3	**INSPECT MD PLAYER** • Clear DTC. • Play MD and select other song (change tracks). • Start on-board diagnostic test mode. • Is DTC 07:Er02 displayed?	Yes	Replace MD player.	
		No	Troubleshooting completed.	

DTC 07:ER07

A6E817566900W25

DTC 07:Er07	MD player
DETECTION CONDITION	**Note** • When error occurs, error message “CHECK MD” is displayed in the LCD. • Base unit detects MD reading error.
POSSIBLE CAUSE	• Defective MD (scratches or dirt) • MD player malfunction

Diagnostic procedure

STEP	INSPECTION		ACTION
1	**INSPECT MD** • Inspect condition of MD where error has occurred. • Is MD okay?	Yes	Go to next step.
		No	Repair (remove foreign material) or replace MD, then go to next step.
2	**INSPECT MD PLAYER** • Clear DTC. • Insert and play MD for **12 seconds or more**. • Start on-board diagnostic test mode. • Is DTC 07:Er07 displayed?	Yes	Replace MD player.
		No	Troubleshooting completed.

DIAGNOSTIC ASSIST FUNCTION

A6E817566900W26

Structural View
Switch location

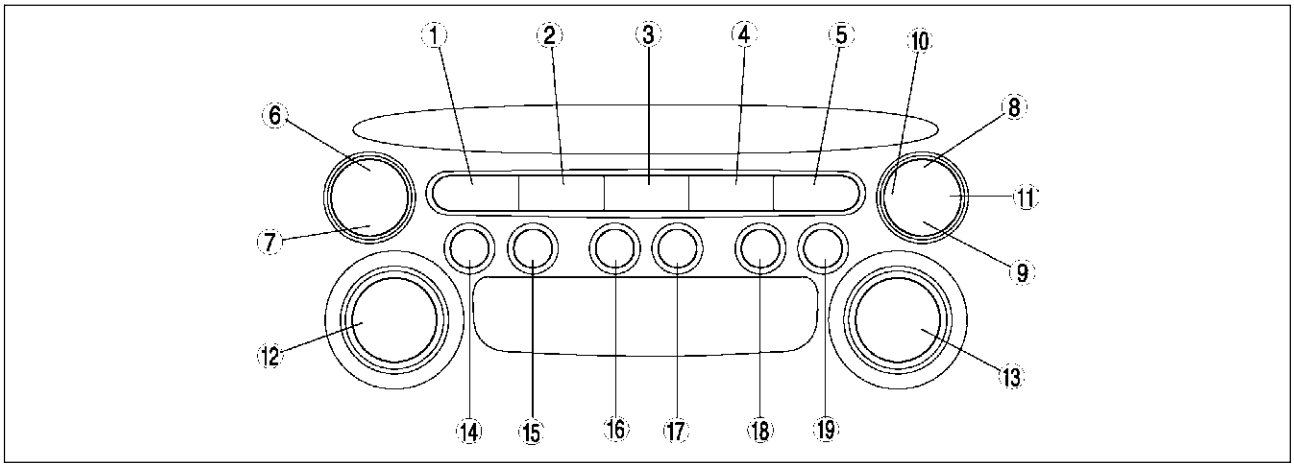

A6E8175W001

1	FM1 button
2	FM2 button
3	AM button
4	CD button
5	TAPE/MD button
6	SEEK button (upper) (type A)
	SCAN button (type B)
7	SEEK button (lower) (type A)
	AUTO-M button (type B)
8	TA button (type A)
	SEEK button (upper) (type B)
9	AUTO-M button (type A)
	SEEK button (lower) (type B)

10	AF button (type A)
11	PYT button (type A)
12	POWER button (type A)
	AUDIO CONT button (type B)
13	AUDIO CONT button (type A)
	POWER button (type B)
14	Preset button “1”
15	Preset button “2”
16	Preset button “3”
17	Preset button “4”
18	Preset button “5”
19	Preset button “6”

LCD Inspection

1. With audio on, first press the POWER button, then simultaneously press the SEEK button (upper) for **approximately 1 second**.
2. Inspect the LCD according to the following table:

Inspection	Display	Action	
Start LCD inspection mode.		Characters displayed in LCD are not truncated or faint.	LCD is okay.
		Other than above.	Replace base unit.

3. Turn the audio off or the ignition switch to the LOCK position to stop the diagnostic assist function.

Button Inspection

1. With audio on, first press the POWER button, then simultaneously press the TAPE/MD button for **approximately 1 second**.
2. Inspect the button according to the following table:

Inspection	Display	Action	
• Start button inspection mode. • Press the all buttons.	—	Buzzer sounds.	Button is okay.
		Buzzer does not sound.	Replace base unit.

3. Turn the audio off or the ignition switch to the LOCK position to stop the diagnostic assist function.

Speaker Inspection

1. With audio on, first press the POWER button, then simultaneously press the AUTO-M button for **approximately 1 second**.
2. Inspect the speaker according to the following table:

Inspection	Display	Action	
• Start speaker inspection mode. • Does each speaker output sound in the following order? 1. Left front door speaker and tweeter 2. Right front door speaker and tweeter 3. Right rear door speaker and woofer 4. Left rear rear door speaker and woofer	—	Yes	Speakers and wiring harness between base unit and speakers are okay.
		No	Inspect the following parts. • Malfunctioning speaker • Wiring harness between base unit and malfunctioning speaker

3. Turn the audio off or the ignition switch to the LOCK position to stop the diagnostic assist function.

Radio Reception Condition Inspection

1. With audio on and at radio mode, first press the POWER button, then simultaneously press the preset button “2” for **approximately 1 second**.
2. Inspect the radio reception condition according to the following table:

Inspection	Display	Action
Start radio reception condition inspection mode.	NORMAL S-METER 5 | S-METER 9	Antenna, antenna feeder, and base unit are okay.
	S-METER 3 | S-METER 4	Change frequency (channel) and inspect again.
	MALFUNCTIONING S-METER 0 | S-METER 2	Inspect antenna and antenna feeder. • If either one of them is not okay, replace malfunctioning part. • If both are okay, replace base unit.

3. Turn the audio off or the ignition switch to the LOCK position to stop the diagnostic assist function.

T

Audio Amplifier (External) Inspection

1. With audio on, first press the POWER button, then simultaneously press the SCAN button for **approximately 1 second**.
2. Inspect the audio amplifier (external) according to the following table:

<table>
<tr><th>Inspection</th><th>Display</th><th colspan="2">Action</th></tr>
<tr><td rowspan="3">Start audio amplifier (external) inspection mode.</td><td rowspan="2">NORMAL
AMP–ON
AUDIO AMPLIFIER
OPERATING SIGNAL
IS OUTPUT</td><td>Speakers output sound.</td><td>System is okay.</td></tr>
<tr><td>Speakers do not output sound.</td><td>Inspect following parts.
• Audio amplifier (external)
• Speakers
• Woofer relay
• Wiring harness (base unit—audio amplifier (external)—Woofer relay)</td></tr>
<tr><td>MALFUNCTIONING
AMP–OFF
AUDIO AMPLIFIER
OPERATING SIGNAL
IS NOT OUTPUT</td><td colspan="2">Replace base unit.</td></tr>
</table>

3. Turn the audio off or the ignition switch to the LOCK position to stop the diagnostic assist function.

ON-BOARD DIAGNOSTIC [CRUISE CONTROL SYSTEM]

FOREWORD

A6E817266350W01

Outline

- There are two on-board diagnostic functions: Operation mode, which inspects for and indicates correct operation of the input signals to the control module, and condition detection mode, which indicates troubles in the system.
- The two functions can be done using either of the following methods:
  — Verifying the flashing pattern of the cruise set indicator light in the instrument cluster.

Inspection Order

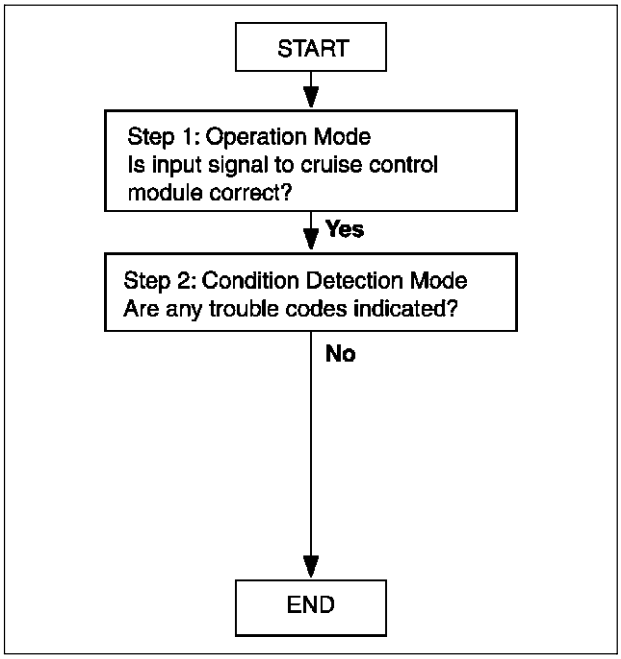

A6E8172W001

INSPECTION OF DTCS FOR OPERATION MODE

A6E817266350W02

Note

- The cruise set indicator light will illuminate **for 3 seconds**, when operation mode is on.
- If the cruise set indicator light does not illuminate **for 3 seconds** (Operation mode is not on), the following may be the cause of the malfunction:
  — Cruise actuator ignition power supply fuse
  — Cruise set indicator light power supply fuse
  — Cruise control switch
  — Cruise control main switch
  — Clock spring for air bag system
  — Print plate in instrument cluster
  — Cruise set indicator light bulb
  — Cruise actuator
  — Open or short circuit in following wiring harnesses:
    - Between cruise set indicator light and cruise actuator terminal G
    - Between fuse block and cruise actuator terminal L
    - Between fuse block and instrument cluster
    - Between cruise actuator and clock spring
    - Between clock spring and cruise control switch
  — Open circuit in following wiring harnesses:
    - Between cruise actuator terminal I and ground
    - Between clock spring and ground

1. Turn the ignition switch to the ON position.
2. Verify that the cruise control main switch is off.

3. Press and hold the RESUME/ACCEL switch on (1), and turn on the cruise control main switch (2). Keep the RESUME/ACCEL switch on for **3 seconds or more** after the cruise control main switch released. (The cruise set indicator light will illuminate for **3 seconds**, showing that the system inspection has started.)
4. Operate each switch as described in the operation code list and note the operation code list pattern.
   - If the cruise set indicator light does not flash, inspect the corresponding system area.
   - If it flashes, the corresponding DTC(s) will be indicated and mode can be judged normal.
5. The operation mode is canceled by turning the ignition switch to LOCK position or turning off the cruise control main switch.

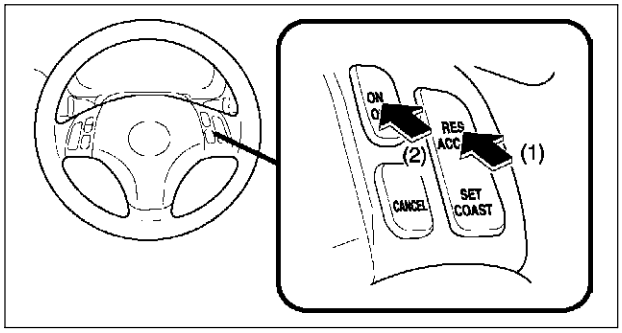

A6E8172W002

Operation Code List

Operation	DTC	Output pattern	Diagnosed circuit	Page
Turn SET/COAST switch on	21		Cruise control switch (SET/COAST switch)	(See T–181 DTC 21)
Turn RESUME/ACCEL switch on	22		Cruise control switch (RESUME/ACCEL switch)	(See T–181 DTC 22)
Depress brake pedal	31	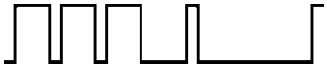	Brake switch	(See T–182 DTC 31)
MTX: Depress clutch pedal **ATX:** Shift selector lever to P or N position	35		**MTX:** Clutch switch **ATX:** TR switch	(See T–183 DTC 35)
Drive vehicle above 40 km/h {25 mph}	37	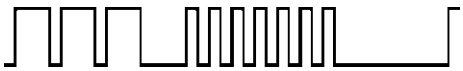	Vehicle speed sensor	(See T–184 DTC 37)

Inspection of Diagnostic Trouble Codes
Foreword

- When performing an asterisked (*) troubleshooting inspection, shake the wiring harness and connectors while doing the inspection to discover whether poor contact points are the cause of any intermittent malfunction. If there is a problem, check to make sure connectors, terminals and wiring harness are connected correctly and undamaged.

DTC 21

A6E817266350W03

DTC 21	Cruise control switch (SET/COAST switch)
DETECTION CONDITION	• Resistance detected between cruise actuator connector terminal J and ground is other than **approximately 680 ohms**.
POSSIBLE CAUSE	• Cruise actuator malfunction • Cruise control switch malfunction • Clock spring malfunction • Open circuit in wiring harness between clock spring and ground • Open or short circuit in wiring harness between cruise actuator and clock spring

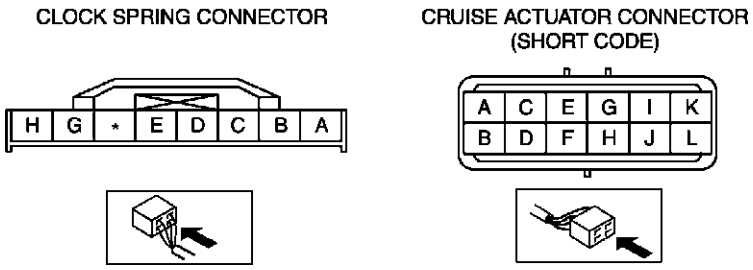

Diagnostic procedure

STEP	INSPECTION		ACTION
1	**INSPECT SIGNAL LINE OF CRUISE CONTROL SWITCH POSITION** • Disconnect cruise actuator connector. • Turn SET/COAST switch on. • Is resistance at cruise actuator connector terminal J **approximately 680 ohms**?	Yes	Replace cruise actuator. (See T–110 CRUISE ACTUATOR REMOVAL/ INSTALLATION)
		No	Go to next step.
2	**INSPECT CRUISE CONTROL SWITCH** • Inspect cruise control switch. (See T–116 CRUISE CONTROL SWITCH INSPECTION) • Is cruise control switch okay?	Yes	Go to next step.
		No	Replace cruise control switch. (See T–115 CRUISE CONTROL SWITCH REMOVAL/ INSTALLATION)
3	**INSPECT CLOCK SPRING** • Inspect clock spring. (See T–126 CLOCK SPRING INSPECTION) • Is clock spring okay?	Yes	Go to next step.
		No	Replace clock spring. (See T–125 CLOCK SPRING REMOVAL/ INSTALLATION)
4	**INSPECT WIRING HARNESS BETWEEN CLOCK SPRING AND GROUND FOR CONTINUITY** • Disconnect cruise control switch connector. • Is there continuity between clock spring connector terminal C and ground?	Yes	Repair wiring harness. (cruise actuator—clock spring)
		No	Repair wiring harness. (clock spring—ground)

DTC 22

A6E817266350W04

DTC 22	Cruise control switch (RESUME/ACCEL switch)
DETECTION CONDITION	• Resistance detected between cruise actuator connector terminal J and ground is other than **approximately 2.2 kilohms**.
POSSIBLE CAUSE	• Cruise actuator malfunction • Cruise control switch malfunction

Diagnostic procedure

INSPECTION		ACTION
INSPECT CRUISE CONTROL SWITCH • Inspect cruise control switch. (See T–116 CRUISE CONTROL SWITCH INSPECTION) • Is cruise control switch okay?	Yes	• Replace cruise actuator. (See T–110 CRUISE ACTUATOR REMOVAL/ INSTALLATION)
	No	• Replace cruise control switch. (See T–115 CRUISE CONTROL SWITCH REMOVAL/INSTALLATION)

T

DTC 31

A6E817266350W05

DTC 31	Brake switch
DETECTION CONDITION	• Voltage detected at cruise actuator connector terminal C is not **approximately 12 V** or voltage detected at cruise actuator connector terminal K is not **approximately 0 V**.
POSSIBLE CAUSE	• Burnt STOP 15 A fuse • Cruise actuator malfunction • Brake switch and/or brake switch 2 malfunction • Open circuit in wiring harness between STOP 15 A fuse and brake switch • Open circuit in wiring harness between brake switch and cruise actuator terminal C • Short circuit in wiring harness between brake switch 2 and cruise actuator terminal K

BRAKE LIGHT CONNECTOR

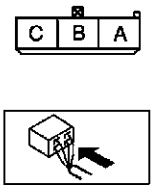

BRAKE SWITCH CONNECTOR

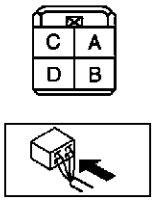

CRUISE ACTUATOR CONNECTOR (SHORT CODE)

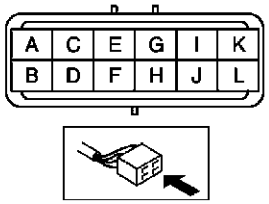

Diagnostic procedure

STEP	INSPECTION		ACTION
1	**VERIFY WHICH BRAKE SWITCH CIRCUIT IS MALFUNCTIONING** • Does brake light illuminate when brake pedal depressed?	Yes	Go to Step 6.
		No	Go to next step.
2	**INSPECT STOP 15 A FUSE FOR FUSION** • Is STOP 15 A fuse okay?	Yes	Go to next step.
		No	Replace fuse after inspecting and repairing wiring harness.
* 3	**INSPECT WIRING HARNESS BETWEEN STOP 15 A FUSE AND BRAKE SWITCH FOR CONTINUITY** • Depress brake pedal. • Is voltage at brake switch connector terminal D **approximately 12 V**?	Yes	Go to Step 5.
		No	Go to next step.
* 4	**INSPECT WIRING HARNESS BETWEEN STOP 15 A FUSE AND BRAKE SWITCH FOR CONTINUITY** • Is voltage at brake switch connector terminal B **approximately 12 V**?	Yes	Inspect brake switch. (See P–8 BRAKE SWITCH INSPECTION)
		No	Repair wiring harness. (STOP 15 A fuse—Brake switch)
* 5	**INSPECT WIRING HARNESS BETWEEN BRAKE SWITCH AND BRAKE LIGHT FOR CONTINUITY** • Depress brake pedal. • Is voltage at brake light connector terminal (power supply side) **approximately 12 V**?	Yes	Inspect following electrical parts. • Brake light bulb • Wiring harness between brake light and ground
		No	Repair wiring harness. (Brake switch—Brake light)
* 6	**INSPECT WIRING HARNESS BETWEEN BRAKE SWITCH AND CRUISE ACTUATOR FOR CONTINUITY** • Depress brake pedal. • Is voltage at cruise actuator connector terminal C **approximately 12 V**?	Yes	Go to next step.
		No	Repair wiring harness. (Cruise actuator—Brake switch)

STEP	INSPECTION		ACTION
* 7	**VERIFY WHICH IS MALFUNCTIONING, CRUISE ACTUATOR AND WIRING HARNESS (BRAKE SWITCH 2 AND CRUISE ACTUATOR) OR BRAKE SWITCH 2** • Disconnect brake switch connector. • Turn ignition switch ON position. • Is voltage at brake switch connector terminal B **approximately 12 V**?	Yes	Go to next step.
		No	Inspect brake switch 2. (See P–8 BRAKE SWITCH INSPECTION)
* 8	**INSPECT WIRING HARNESS BETWEEN BRAKE SWITCH 2 AND CRUISE ACTUATOR FOR SHORT TO POWER SUPPLY** • Turn ignition switch to LOCK position. • Disconnect cruise actuator connector. • Turn ignition switch ON position. • Is voltage at cruise actuator connector terminal K **approximately 12 V**?	Yes	Repair wiring harness. (Cruise actuator—Brake switch 2)
		No	Repalce cruise actuator. (See T–110 CRUISE ACTUATOR REMOVAL/ INSTALLATION)

DTC 35

A6E817266350W06

DTC 35	Clutch switch (MTX), TR switch (ATX)
DETECTION CONDITION	• Voltage detected at cruise actuator connector terminal F is not **approximately 0 V**.
POSSIBLE CAUSE	• Cruise actuator malfunction • Starter relay malfunction (ATX) • Clutch switch malfunction (MTX) • TR switch malfunction (ATX) • Open circuit in wiring harness between PCM and clutch switch (MTX) • Open circuit in wiring harness between starter relay and TR switch (ATX) • Open circuit in wiring harness between cruise actuator and clutch switch (MTX) or TR switch (ATX)

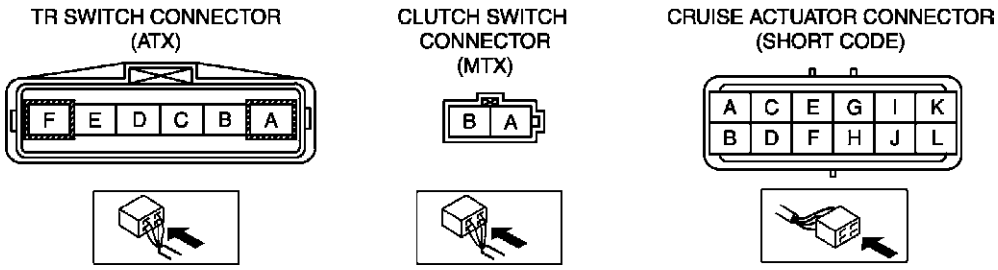

Diagnostic procedure

STEP	INSPECTION		ACTION
1	• Does vehicle has MTX?	Yes	Go to next step.
		No	Go to step 5.
2	**INSPECT CLUTCH SWITCH** Is clutch switch okay?	Yes	Go to next step.
		No	Replace clutch switch.
* 3	**INSPECT WIRING HARNESS BETWEEN CLUTCH SWITCH AND GROUND FOR CONTINUITY** • Disconnect clutch switch connector. • Is there continuity between clutch switch connector terminal B and ground?	Yes	Go to next step.
		No	Repair wiring harness. (Clutch switch—ground)
* 4	**INSPECT WIRING HARNESS BETWEEN CRUISE ACTUATOR AND CLUTCH SWITCH FOR CONTINUITY** • Disconnect cruise actuator connector. • Is there continuity between cruise actuator connector terminal F and clutch switch connector terminal A?	Yes	Replace cluise actuator. (SeeT–110 CRUISE ACTUATOR REMOVAL/ INSTALLATION)
		No	Repair wiring harness. (Cruise actuator—clutch switch)

T

STEP	INSPECTION		ACTION
5	**INSPECT TR SWITCH** • Inspect TR switch. (See K–14 TRANSAXLE RANGE (TR) SWITCH INSPECTION) • Is TR switch okay?	Yes	Go to next step.
		No	Repair TR switch. (See K–15 TRANSAXLE RANGE (TR) SWITCH REMOVAL/INSTALLATION)
* 6	**INSPECT WIRING HARNESS BETWEEN TR SWITCH AND GROUND FOR CONTINUITY** • Disconnect TR switch connector. • Is there continuity between TR switch connector terminal A and ground?	Yes	Go to next step.
		No	Repair wiring harness (TR switch—ground) or inspect starter.
* 7	**INSPECT WIRING HARNESS BETWEEN CRUISE ACTUATOR AND TR SWITCH FOR CONTINUITY** • Disconnect cruise actuator connector. • Is there continuity between cruise actuator connector terminal F and TR switch connector terminal F?	Yes	Replace cruise actuator. (SeeT–110 CRUISE ACTUATOR REMOVAL/ INSTALLATION)
		No	Repair wiring harness. (cruise actuator—TR switch)

DTC 37

A6E817266350W07

DTC 37	Vehicle speed sensor
DETECTION CONDITION	• Vehicle speed signal is not detected at cruise actuator connector terminal A.
POSSIBLE CAUSE	• Cruise actuator malfunction • DSC HU/CM (with ABS/TCS HU/CM) • Open or short circuit in wiring harness between ABS/TCS cruise actuator and DSC HU/CM (without DSC: ABS/TCS HU/CM)

CRUISE ACTUATOR CONNECTOR
(SHORT CODE)

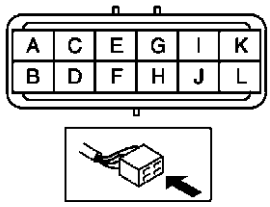

Diagnostic procedure

STEP	INSPECTION		ACTION
1	**INSPECT SPEEDOMETER OPERATION** • Does speedometer operate correctly?	Yes	Go to next step.
		No	Perform instrument cluster input/output check mode. (See T–75 INSTRUMENT CLUSTER INPUT/ OUTPUT CHECK MODE)
2	**INSPECT PCM ON-BOARD DIAGNOSTIC** • Drive the vehicle at more than **40 km/h {25 mph}**. • Check the DTC for PCM ON-BOARD DIAGNOSTIC. • Is DTC P0500 displayed?	Yes	Go to applicable DTC inspection.
		No	Go to next step.
* 3	**VERIFY WHICH IS MALFUNCTIONING, WIRING HARNESS WITH DSC OR CRUISE ACTUATOR** • Disconnect cruise actuator connector and DSC HU/CM connector. • Is there continuity between cruise actuator connector terminal A and DSC HU/CM connector terminal AE? **With ABS/TCS** • Disconnect cruise actuator connector and ABS/ TCS HU/CM connector. • Is there continuity between cruise actuator connector terminal A and ABS/TCS connector terminal V?	Yes	Replace cruise actuator. (See T–110 CRUISE ACTUATOR REMOVAL/ INSTALLATION)
		No	Repair wiring harness. **With DSC** (DSC HU/CM—Cruise actuator) **With ABS/TCS** (ABS/TCS HU/CM—Cruise actuator)

INSPECTION OF DTCS FOR CONDITION DETECTION MODE

A6E817266350W08

Note
- The cruise set indicator light will illuminate **for 3 seconds**, when condition detection mode is on.
- If the RESUME/ACCEL switch on the cruise control switch is malfunctioning, the cruise set indicator light will not give a correct indication when you inspect the system.

1. Drive the vehicle at **30 km/h {19 mph} or more**.
2. Press on the cruise control main switch (1).
3. Operate each of the cruise control switches.
4. Stop the vehicle and let it idle.
5. Turn and hold the RESUME/ACCEL switch on **for at least 3 seconds** (2). The cruise set indicator light will illuminate **for 3 seconds**, and then go off **for at least 2 seconds**. Thus, the condition detection mode begins.
   - If a DTC is indicated, inspect the corresponding system area.
   - If normal, DTC(s) will not be indicated.
6. The condition detection mode is canceled by turning the ignition switch to LOCK position or turning off the cruise control main switch.

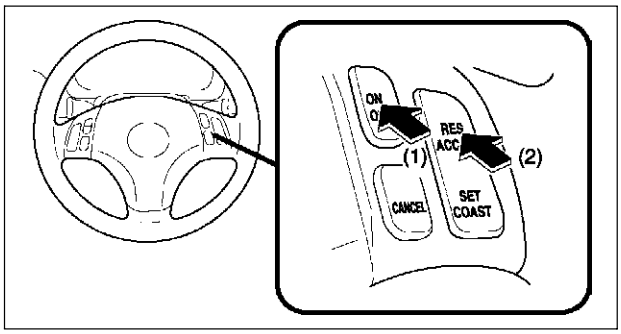

A6E8172W013

Condition Code List

DTC	Output pattern	Diagnosed circuit	Page
01		Cruise actuator (Drive circuit)	(See T–186 DTC 01)
05		Brake switch	(See T–186 DTC 05)
07		Brake switch Brake switch 2	(See T–186 DTC 07)
11		Cruise control switch (SET/ COAST switch)	(See T–187 DTC 11)
12		Cruise control switch (RESUME/ ACCEL switch)	(See T–187 DTC 12)
13		Cruise control switch (Ground circuit)	(See T–188 DTC 13)
15		Cruise actuator (Control circuit)	(See T–188 DTC 15)

Note
- When two or more DTCs are indicated, inspect the malfunction with the smallest number first.

Inspection of Diagnostic Trouble Codes

Foreword
- When performing an asterisked (*) troubleshooting inspection, shake the wiring harness and connectors while doing the inspection to discover whether poor contact points are the cause of any intermittent malfunction. If there is a problem, check to make sure connectors, terminals and wiring harness are connected correctly and undamaged.

T

DTC 01

A6E817266350W09

DTC 01	Cruise actuator (Drive circuit)
DETECTION CONDITION	• Malfunction in cruise actuator circuit (drive circuit)
POSSIBLE CAUSE	• Cruise actuator malfunction

Diagnostic procedure

ACTION
REPLACE CRUISE ACTUATOR IF IT IS MALFUNCTIONING • Replace cruise actuator. (See T–110 CRUISE ACTUATOR REMOVAL/INSTALLATION)

DTC 05

A6E817266350W10

DTC 05	Brake switch
DETECTION CONDITION	• Voltage detected at cruise actuator connector terminal C is always **approximately 0 V**.
POSSIBLE CAUSE	• Cruise actuator malfunction

Diagnostic procedure

INSPECTION		ACTION
INSPECT DTC FOR OPERATION MODE • Was operation mode for DTC 31 performed?	Yes	Perform operation mode for DTC 31 on-board diagnostic again. Even if no malfunction is detected in operation mode, if DTC 05 is indicated in condition detection mode on-board diagnostic, replace cruise actuator. (See T–110 CRUISE ACTUATOR REMOVAL/INSTALLATION)
	No	Perform operation mode for DTC 31.

DTC 07

A6E817266350W11

DTC 07	Brake switch Brake switch 2
DETECTION CONDITION	• Voltage detected at cruise actuator connector terminal C or K is always **approximately 12 V**. • Voltage detected at cruise actuator connector terminal K is always **approximately 0 V**.
POSSIBLE CAUSE	• METER IG15 A fuse burnt out • Brake switch and/or brake switch 2 malfunction • Cruise actuator malfunction • Open circuit in wiring harness between STOP 15 A fuse and brake switch • Open or short circuit in wiring harness between brake switch and cruise actuator terminal C • Open circuit in wiring harness between brake switch 2 and METER IG15 A fuse • Open or short circuit in wiring harness between cruise actuator terminal K and brake switch 2

BRAKE SWITCH CONNECTOR

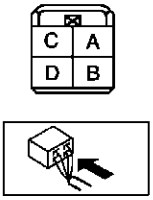

CRUISE ACTUATOR CONNECTOR (SHORT CODE)

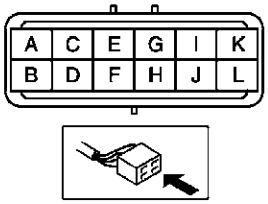

Diagnostic procedure

STEP	INSPECTION		ACTION
1	**INSPECT BRAKE SWITCH** • Disconnect brake switch connector. • Inspect brake switch. (See P–8 BRAKE SWITCH INSPECTION) • Is brake switch okay?	Yes	Go to next step.
		No	Replace brake switch.
2	**INSPECT BRAKE SWITCH 2** • Inspect brake switch 2. (See P–8 BRAKE SWITCH INSPECTION) • Is brake switch okay?	Yes	Go to next step.
		No	Replace brake switch.
3	**INSPECT WIRING HARNESS BETWEEN BRAKE SWITCH AND CRUISE ACTUATOR FOR CONTINUITY** • Disconnect cruise actuator connector. • Is there continuity between brake switch connector D and cruise actuator connector C.	Yes	Go to next step.
		No	Repair wiring harness. (Cruise actuator—Brake switch)
4	**INSPECT WIRING HARNESS BETWEEN BRAKE SWITCH 2 AND CRUISE ACTUATOR FOR SHORT TO POWER SUPPLY** • Connect brake switch connector. • Turn ignition switch ON position. • Is voltage at cruise actuator connector terminal K **approximately 12 V**?	Yes	Replace cruise actuator. (See T–110 CRUISE ACTUATOR REMOVAL/INSTALLATION)
		No	Repair wiring harness. (Cruise actuator—Brake switch 2)

DTC 11

A6E817266350W12

DTC 11	Cruise control switch (SET/COAST switch)
DETECTION CONDITION	• Resistance detected between cruise actuator connector terminal J and ground is always **approximately 680 ohms**.
POSSIBLE CAUSE	• Cruise actuator malfunction • Cruise control switch malfunction

Diagnostic procedure

INSPECTION		ACTION
INSPECT DTC FOR OPERATION MODE • Was operation mode for DTC 21 performed?	Yes	Perform operation mode for DTC 21 on-board diagnostic again. Even if no malfunction is detected in operation mode, if DTC 11 is indicated in condition detection mode on-board diagnostic, replace cruise actuator. (See T–110 CRUISE ACTUATOR REMOVAL/INSTALLATION)
	No	Perform operation mode for DTC 21.

DTC 12

A6E817266350W13

DTC 12	Cruise control switch (RESUME/ACCEL switch)
DETECTION CONDITION	• Resistance detected between cruise actuator connector terminal J and ground is always **approximately 2.2 kilohms**.
POSSIBLE CAUSE	• Cruise actuator malfunction

Diagnostic procedure

INSPECTION		ACTION
INSPECT DTC FOR OPERATION MODE • Was operation mode for DTC 22 performed?	Yes	Perform operation mode for DTC 22 on-board diagnostic again. Even if no malfunction is detected in operation mode, if DTC 12 is indicated in condition detection mode on-board diagnostic, replace cruise actuator. (See T–110 CRUISE ACTUATOR REMOVAL/INSTALLATION)
	No	Perform operation mode for DTC 22.

DTC 13

A6E817266350W14

DTC 13	Cruise control switch (ground circuit)
DETECTION CONDITION	• Resistance detected between cruise actuator connector terminal J and ground is always **approximately 0 ohm**.
POSSIBLE CAUSE	• Cruise actuator malfunction

Diagnostic procedure

INSPECTION		ACTION
INSPECT DTC FOR OPERATION MODE • Was operation mode for DTCs 21 and 22 performed?	Yes	Perform operation mode for DTCs 21 and 22 on-board diagnostic again. Even if no malfunction is detected in operation mode, if DTC 13 is indicated in condition detection mode on-board diagnostic, replace cruise actuator. (See T–110 CRUISE ACTUATOR REMOVAL/INSTALLATION)
	No	Perform operation mode for DTCs 21 and 22.

DTC 15

A6E817266350W15

DTC 15	Cruise actuator (control circuit)
DETECTION CONDITION	• Malfunction in cruise actuator circuit (control circuit)
POSSIBLE CAUSE	• Cruise actuator malfunction

Diagnostic procedure

ACTION
REPLACE CRUISE ACTUATOR IF IT IS MALFUNCTIONING • Replace cruise actuator. (See T–110 CRUISE ACTUATOR REMOVAL/INSTALLATION)

ON-BOARD DIAGNOSTIC [AIR BAG SYSTEM]

FOREWORD

A6E817401046W01

Outline

- The OBD (on-board diagnostic) test inspects the integrity and function of the air bag system and outputs the results when requested by the specific tests.
- OBD test also:
  - — Provides a quick inspection of the air bag system.
  - — Is usually performed at the start of each diagnostic procedure.
  - — Provides verification after repairs to ensure that no other faults occurred during service.
- The OBD test is divided into three tests:
  - — Read/clear diagnostic results
  - — PID/data monitor and record
  - — Active command mode
- Diagnostic DTC can be read/cleared, using the **SST** (WDS or equivalent).

Note

- When the air bag system is malfunctioning, turn the ignition switch to the ON position to display the current DTC, using the air bag system warning light on the instrument cluster. However this light is strictly for reference. Make sure to inspect the system, using the **SST** (WDS or equivalent).

Read/clear diagnostic results

- This function allows you to read or clear DTCs in the SAS unit memory.

PID/data monitor and record

- This function allows you access certain data values, input signals, calculated values, and system status information.

Active command modes

- This function allows you to control devices through WDS or equivalent.

Flowchart

- Use the following flowchart to verify the cause of the trouble.

Note

- While performing the inspection of the past malfunction code, the applicable DTCs may be added to memory by removing or disconnecting the related parts. Inspect only the DTCs that were indicated before inspecting.
- When DTCs of present malfunction are no longer output after present and/or past malfunctions have been repaired, be sure to perform past malfunction display cancellation to prevent repair of malfunctions that have already been repaired.

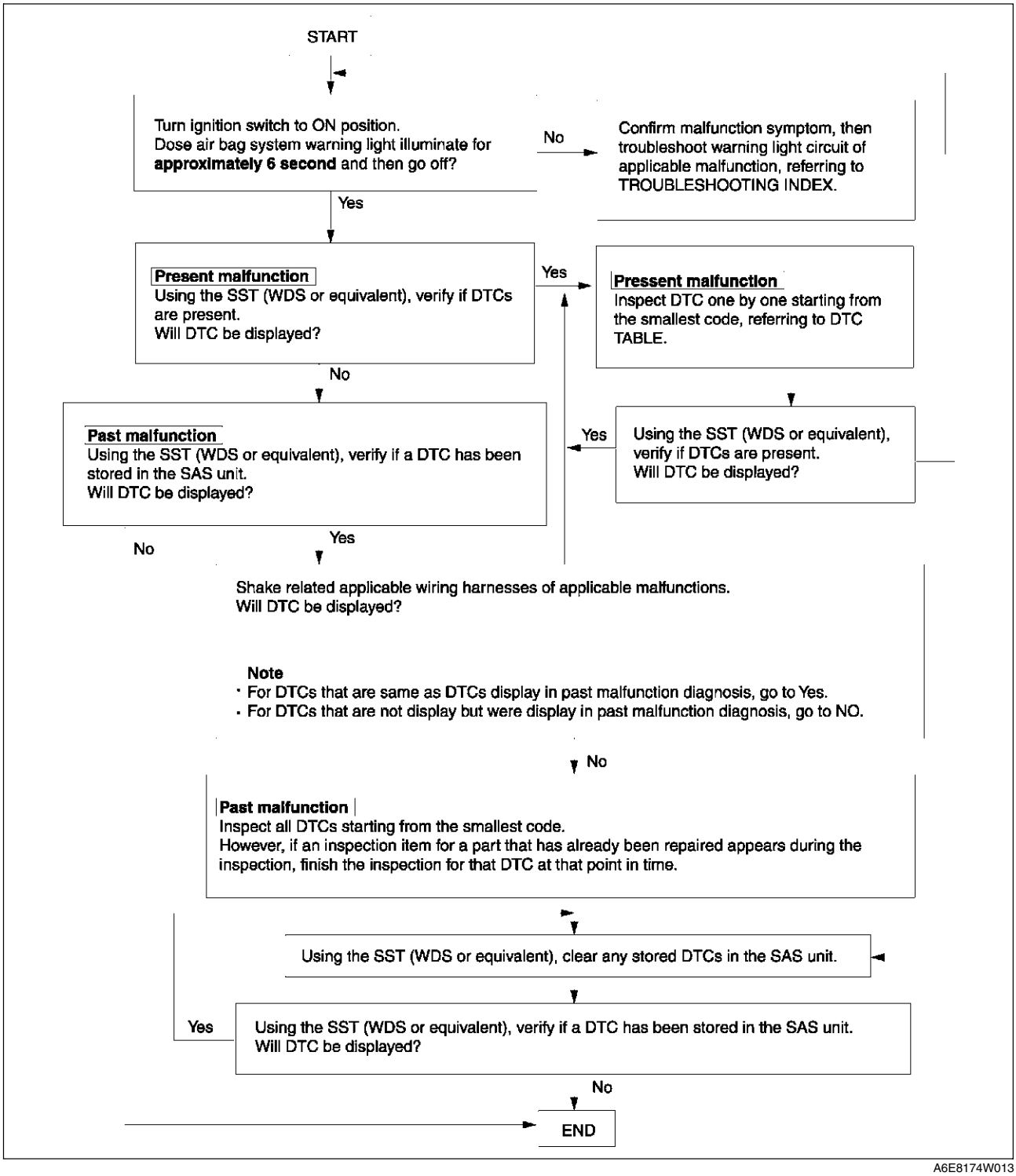

A6E8174W013

DTCs Reading Procedure

1. Connect **SST** (WDS or equivalent) to the vehicle DLC-2 16-pin connector.
2. Retrieve DTC using **SST** (WDS or equivalent).

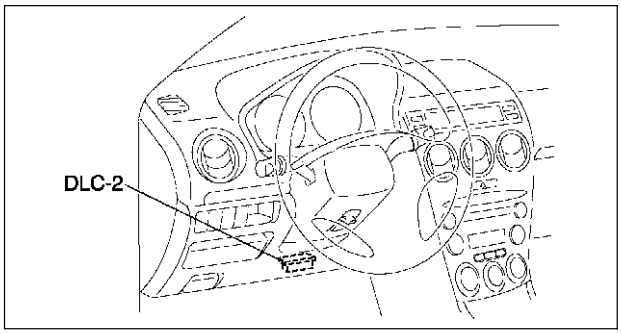

A6E3970W002

Clearing DTCs Procedure

1. After repairs have been made, perform the **DTCs reading procedure**.
2. Erase DTCs using **SST** (WDS or equivalent).
3. Ensure that the customer's concern has been resolved.

PID/Data Monitor and Record Procedure

1. Connect **SST** (WDS or equivalent) to the vehicle DLC-2 16-pin connector.
2. Access and monitor PIDs using **SST** (WDS or equivalent).

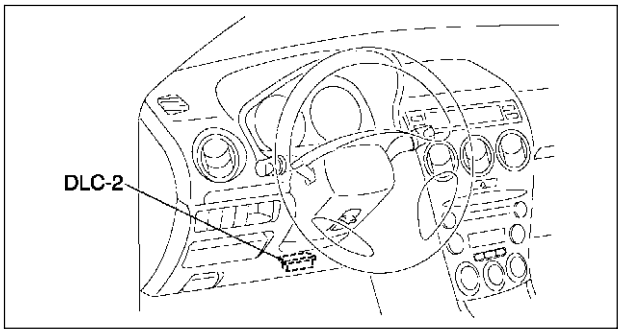

A6E3970W002

Active Command Mode Procedure

1. Connect **SST** (WDS or equivalent) to the vehicle DLC-2 16-pin connector.
2. Turn the ignition switch to ON position.
3. Activate active command mode using **SST** (WDS or equivalent).

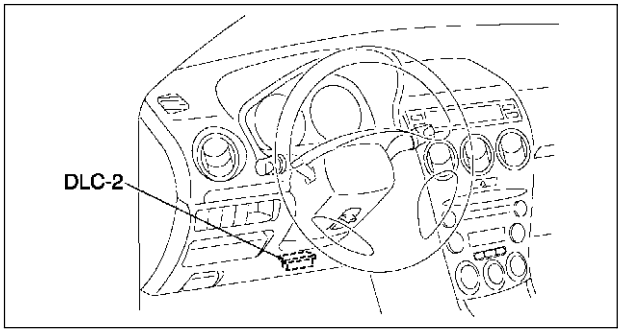

A6E3970W002

T

DTC TABLE

A6E817401046W02

- DTCs are common for present and past malfunction diagnosis.

Note

- When DTCs not shown in the DTC table are displayed, replace the SAS unit.
- If the air bag system warning light does not illuminate or remains illuminated when the ignition switch is turned to ON position, inspect and repair the air bag system warning light circuitry and then confirm that the air bag system warning light is operational.
- The air bag system warning light will flash the DTC pattern for five cycles, and then will remain illuminated until the ignition switch is turned to the LOCK position.

DTC				Malfunction location	Page
WDS or equivalent	Air bag system warning light				
	Flashing pattern		Priority ranking		
B1231	13		3	SAS unit activation (deployment) control freeze	(See T–198 DTC B1231)
B1342	12		2	SAS unit	(See T–198 DTC B1342)
	—	Air bag system warning light is illuminated all the time.	1	SAS unit (DTC 12 detection circuit malfunction)	
B1869	—	Air bag system warning light is illuminated all the time.	1	Air bag system warning light system circuit open	(See T–198 DTC B1869, B1870)
	—	Air bag system warning light is illuminated does not illuminate.	—	Air bag system warning light system circuit short to ground	
B1870	—	Air bag system warning light is illuminated all the time.	1	Air bag system warning light system circuit short to power supply	
B1871	47		19	Occupancy sensor system (communication error)	(See T–200 DTC B1871)
	48		20	Occupancy sensor system (sensor internal circuit abnormal)	
B1877	33		13	Driver-side pre-tensioner seat belt system resistance high	(See T–202 DTC B1877, B1878, B1879, B1885)
B1878				Driver-side pre-tensioner seat belt system circuit short to power supply	
B1879				Driver-side pre-tensioner seat belt system circuit short to ground	
B1881	34		12	Passenger-side pre-tensioner seat belt system resistance high	(See T–203 DTC B1881, B1882, B1883, B1886)
B1882				Passenger-side pre-tensioner seat belt system circuit short to power supply	
B1883				Passenger-side pre-tensioner seat belt system short to ground	
B1884	18		18	Passenger-side air bag cut-off indicator light system circuit open or short to ground	(See T–205 DTC B1884, B1890)

DTC				Malfunction location	Page
WDS or equivalent	Air bag system warning light				
	Flashing pattern		Priority ranking		
B1885	33		13	Driver-side pre-tensioner seat belt system resistance low	(See T–202 DTC B1877, B1878, B1879, B1885)
B1886	34		12	Passenger-side pre-tensioner seat belt system resistance low	(See T–203 DTC B1881, B1882, B1883, B1886)
B1890	18		18	Passenger-side air bag cut-off indicator light system circuit short to power supply	(See T–205 DTC B1884, B1890)
B1913	19		11	Driver-side air bag module (inflator No.1) system circuit short to ground	(See T–208 DTC B1913, B1916, B1932, B1934)
	21	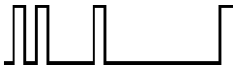	10	Passenger-side air bag module (inflator No.1) system circuit short to ground	(See T–210 DTC B1913, B1925, B1933, B1935)
B1916	19		11	Driver-side air bag module (inflator No.1) system circuit short to power supply	(See T–208 DTC B1913, B1916, B1932, B1934)
B1921	14		4	Deployment prohibited because configuration is not set	(See T–211 DTC B1921)
B1925	21		10	Passenger-side air bag module (inflator No.1) system circuit short to power supply	(See T–210 DTC B1913, B1925, B1933, B1935)
B1932	19		11	Driver-side air bag module (inflator No.1) system resistance high	(See T–208 DTC B1913, B1916, B1932, B1934)
B1933	21	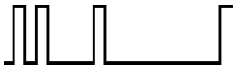	10	Passenger-side air bag module (inflator No.1) system resistance high	(See T–210 DTC B1913, B1925, B1933, B1935)
B1934	19		11	Driver-side air bag module (inflator No.1) system resistance low	(See T–208 DTC B1913, B1916, B1932, B1934)
B1935	21		10	Passenger-side air bag module (inflator No.1) system resistance low	(See T–210 DTC B1913, B1925, B1933, B1935)
B1992	22		15	Driver-side side air bag module system circuit short to power supply	(See T–212 DTC B1992, B1993, B1994, B1995)
B1993				Driver-side side air bag module system circuit short to ground	
B1994				Driver-side side air bag module system resistance high	
B1995				Driver-side side air bag module system resistance low	

T

DTC				Malfunction location	Page
WDS or equivalent	Air bag system warning light				
	Flashing pattern		Priority ranking		
B1996	23		14	Passenger-side side air bag module system circuit short to power supply	(See T–213 DTC B1996, B1997, B1998, B1999)
B1997				Passenger-side side air bag module system circuit short to ground	
B1998				Passenger-side side air bag module system resistance high	
B1999				Passenger-side side air bag module system resistance low	
B2228	19		11	Driver-side air bag module (inflator No.2) system circuit short to ground	(See T–215 DTC B2228, B2230, B2232, B2234)
B2229	21	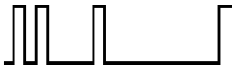	10	Passenger-side air bag module (inflator No.2) system circuit short to ground	(See T–217 DTC B2229, B2231, B2233, B2235)
B2230	19		11	Driver-side air bag module (inflator No.2) system circuit short to power supply	(See T–215 DTC B2228, B2230, B2232, B2234)
B2231	21	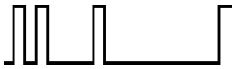	10	Passenger-side air bag module (inflator No.2) system circuit short to power supply	(See T–217 DTC B2229, B2231, B2233, B2235)
B2232	19		11	Driver-side air bag module (inflator No.2) system resistance high	(See T–215 DTC B2228, B2230, B2232, B2234)
B2233	21	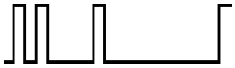	10	Passenger-side air bag module (inflator No.2) system resistance high	(See T–217 DTC B2229, B2231, B2233, B2235)
B2234	19		11	Driver-side air bag module (inflator No.2) system resistance low	(See T–215 DTC B2228, B2230, B2232, B2234)
B2235	21	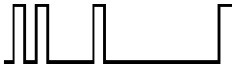	10	Passenger-side air bag module (inflator No.2) system resistance low	(See T–217 DTC B2229, B2231, B2233, B2235)
B2296	42		9	Crash zone sensor system (communication error, sensor internal circuit abnormal)	(See T–218 DTC B2296)
B2444	43		8	Driver-side side air bag sensor system (sensor internal circuit abnormal)	(See T–220 DTC B2444, U2017)
B2445	44		7	Passenger-side side air bag sensor system (sensor internal circuit abnormal)	(See T–222 DTC B2445, U2018)
B2477	54		5	Configuration error	(See T–224 DTC B2477)

DTC				Malfunction location	Page
WDS or equivalent	Air bag system warning light				
	Flashing pattern		Priority ranking		
B2773	24		17	Driver-side curtain air bag module system resistance low	(See T–224 DTC B2773, B2774, B2775, B2776)
B2774				Driver-side curtain air bag module system resistance high	
B2775				Driver-side curtain air bag module system circuit short to ground	
B2776				Driver-side curtain air bag module system circuit short to power supply	
B2777	25		16	Passenger-side curtain air bag module system resistance low	(See T–226 DTC B2777, B2778, B2779, B2780)
B2778				Passenger-side curtain air bag module system resistance high	
B2779				Passenger-side curtain air bag module system circuit short to ground	
B2780				Passenger-side curtain air bag module system circuit short to power supply	
B2867	31		6	SAS unit connector poor connection	(See T–227 DTC B2867)
U2017	43		8	Driver-side side air bag sensor system (communication error)	(See T–220 DTC B2444, U2017)
U2018	44		7	Passenger-side side air bag sensor system (communication error)	(See T–222 DTC B2445, U2018)

T

PID/DATA MONITOR TABLE

A6E817401046W03

PID name (definition)	Unit/condition	Condition/specification	SAS unit terminal
CONT_RCM (Number of continuous DTC)	—	• DTC is detected: 1—255 • DTC is not detected: 0	—
D_ABAGR2 (Driver-side air bag module (inflator No.2) resistance)	ohm	Under any condition: 1.5—3.7 ohm	1G, 1J
D_CRSH_S (Driver-side side air bag sensor state)	OK/ COMM FAIL/ INT FAIL	• Sensor normal: OK • Sensor communication error: COMM FAIL • Sensor internal circuit abnormal: INT FAIL	2Z, 2AA
DABAGR (Driver-side air bag module (inflator No.1) resistance)	ohm	Under any condition: 1.5—3.7 ohm	1S, 1V
DR_CURTN (Driver-side curtain air bag module resistance)	ohm	Under any condition: 1.4—3.2 ohm	2V, 2Y
DR_PTENS (Driver-side pre-tensioner seat belt resistance)	ohm	Under any condition: 1.5—3.1 ohm	2P, 2S
DS_AB (Driver-side side air bag module resistance)	ohm	Under any condition: 1.4—3.2 ohm	2M, 2O

PID name (definition)	Unit/condition	Condition/specification	SAS unit terminal
DS_AB_ST (Driver-side side air bag module circuit state)	NORMAL/ OPEN/ SHRT GND/ SHRT B+	• Related wiring harness normal: NORMAL • Related wiring harness circuit open: OPEN • Related wiring harness short to ground: SHRT GND • Related wiring harness short to power supply: SHRT B+	2M, 2O
DS_CURT_ST (Driver-side curtain air bag module circuit state)	NORMAL/ OPEN/ SHRT GND/ SHRT B+	• Related wiring harness normal: NORMAL • Related wiring harness circuit open: OPEN • Related wiring harness short to ground: SHRT GND • Related wiring harness short to power supply: SHRT B+	2V, 2Y
DS1_STAT (Driver-side air bag module (inflator No.1) circuit state)	NORMAL/ OPEN/ SHRT GND/ SHRT B+	• Related wiring harness normal: NORMAL • Related wiring harness circuit open: OPEN • Related wiring harness short to ground: SHRT GND • Related wiring harness short to power supply: SHRT B+	1S, 1V
DS2_STAT (Driver-side air bag module (inflator No.2) circuit state)	NORMAL/ OPEN/ SHRT GND/ SHRT B+	• Related wiring harness normal: NORMAL • Related wiring harness circuit open: OPEN • Related wiring harness short to ground: SHRT GND • Related wiring harness short to power supply: SHRT B+	1G, 1J
DSB_P_ST (On demand driver-side pre-tensioner seat belt circuit state)	NORMAL/ OPEN/ SHRT GND/ SHRT B+	• Related wiring harness normal: NORMAL • Related wiring harness circuit open: OPEN • Related wiring harness short to ground: SHRT GND • Related wiring harness short to power supply: SHRT B+	2P, 2S
DSSBLT_PF (Driver-side pre-tensioner seat belt circuit state)	NORMAL/ OPEN/ SHRT GND/ SHRT B+	• Related wiring harness normal: NORMAL • Related wiring harness circuit open: OPEN • Related wiring harness short to ground: SHRT GND • Related wiring harness short to power supply: SHRT B+	2P, 2S
FRNT_CRSH_SNSR (Crash zone sensor state)	OK/ COMM FAIL/ INT FAIL	• Sensor normal: OK • Sensor communication error: COMM FAIL • Sensor internal circuit abnormal: INT FAIL	1B, 1C
OD_D_CRSH (On demand driver-side side air bag sensor state)	OK/ COMM FAIL/ INT FAIL	• Sensor normal: OK • Sensor communication error: COMM FAIL • Sensor internal circuit abnormal: INT FAIL	2Z, 2AA
OD_D_CURT (On demand driver-side curtain air bag module circuit state)	NORMAL/ OPEN/ SHRT GND/ SHRT B+	• Related wiring harness normal: NORMAL • Related wiring harness circuit open: OPEN • Related wiring harness short to ground: SHRT GND • Related wiring harness short to power supply: SHRT B+	2V, 2Y
OD_DAB1_ST (On demand driver-side air bag module (inflator No.1) circuit state)	NORMAL/ OPEN/ SHRT GND/ SHRT B+	• Related wiring harness normal: NORMAL • Related wiring harness circuit open: OPEN • Related wiring harness short to ground: SHRT GND • Related wiring harness short to power supply: SHRT B+	1S, 1V
OD_DAB2_ST (On demand driver-side air bag module (inflator No.2) circuit state)	NORMAL/ OPEN/ SHRT GND/ SHRT B+	• Related wiring harness normal: NORMAL • Related wiring harness circuit open: OPEN • Related wiring harness short to ground: SHRT GND • Related wiring harness short to power supply: SHRT B+	1G, 1J
OD_DSAB_ST (On demand driver-side side air bag circuit state)	NORMAL/ OPEN/ SHRT GND/ SHRT B+	• Related wiring harness normal: NORMAL • Related wiring harness circuit open: OPEN • Related wiring harness short to ground: SHRT GND • Related wiring harness short to power supply: SHRT B+	2M, 2O
OD_F_CRSH (On demand crash zone sensor state)	OK/ COMM FAIL/ INT FAIL	• Sensor normal: OK • Sensor communication error: COMM FAIL • Sensor internal circuit abnormal: INT FAIL	1B, 1C
OD_P_CRSH (On demand passenger-side side air bag sensor state)	OK/ COMM FAIL/ INT FAIL	• Sensor normal: OK • Sensor communication error: COMM FAIL • Sensor internal circuit abnormal: INT FAIL	2B, 2C
OD_P_CURT (On demand passenger-side curtain air bag module circuit state)	NORMAL/ OPEN/ SHRT GND/ SHRT B+	• Related wiring harness normal: NORMAL • Related wiring harness circuit open: OPEN • Related wiring harness short to ground: SHRT GND • Related wiring harness short to power supply: SHRT B+	2A, 2D
OD_PAB1ST (On demand passenger-side air bag module (inflator No.1) circuit state)	NORMAL/ OPEN/ SHRT GND/ SHRT B+	• Related wiring harness normal: NORMAL • Related wiring harness circuit open: OPEN • Related wiring harness short to ground: SHRT GND • Related wiring harness short to power supply: SHRT B+	1M, 1P
OD_PAB2_ST (On demand passenger-side air bag module (inflator No.2) circuit state)	NORMAL/ OPEN/ SHRT GND/ SHRT B+	• Related wiring harness normal: NORMAL • Related wiring harness circuit open: OPEN • Related wiring harness short to ground: SHRT GND • Related wiring harness short to power supply: SHRT B+	1A,1D

PID name (definition)	Unit/condition	Condition/specification	SAS unit terminal
OD_P_PSAB_ST (On demand passenger-side side air bag sensor circuit state)	NORMAL/ OPEN/ SHRT GND/ SHRT B+	• Related wiring harness normal: NORMAL • Related wiring harness circuit open: OPEN • Related wiring harness short to ground: SHRT GND • Related wiring harness short to power supply: SHRT B+	2I, 2L
P_ABAGR2 (Passenger-side air bag module (inflator No.2) resistance)	ohm	Under any condition: 1.4—2.9 ohm	1A, 1D
P_PTENSFLT (Passenger-side pre-tensioner seat belt circuit state)	NORMAL/ OPEN/ SHRT GND/ SHRT B+	• Related wiring harness normal: NORMAL • Related wiring harness circuit open: OPEN • Related wiring harness short to ground: SHRT GND • Related wiring harness short to power supply: SHRT B+	2G, 2J
PABAGR (Passenger-side air bag module (inflator No.1) resistance)	ohm	Under any condition: 1.4—2.9 ohm	1M, 1P
PCRSH_SNSR (Passenger-side side air bag sensor state)	OK/ COMM FAIL/ INT FAIL	• Sensor normal: OK • Sensor communication error: COMM FAIL • Sensor internal circuit abnormal: INT FAIL	2B, 2C
PS_AB (Passenger-side side air bag module resistance)	ohm	Under any condition: 1.4—3.2 ohm	2I, 2L
PS_AB_ST (Passenger-side side air bag sensor circuit state)	NORMAL/ OPEN/ SHRT GND/ SHRT B+	• Related wiring harness normal: NORMAL • Related wiring harness circuit open: OPEN • Related wiring harness short to ground: SHRT GND • Related wiring harness short to power supply: SHRT B+	2I, 2L
PS_CURTN (Passenger-side curtain air bag module resistance)	ohm	Under any condition: 1.4—3.2 ohm	2A, 2B
PS_CURT_ST (Passenger-side curtain air bag module circuit state)	NORMAL/ OPEN/ SHRT GND/ SHRT B+	• Related wiring harness normal: NORMAL • Related wiring harness circuit open: OPEN • Related wiring harness short to ground: SHRT GND • Related wiring harness short to power supply: SHRT B+	2A, 2D
PS_PTENS (Passenger-side pre-tensioner seat belt resistance)	ohm	Under any condition: 1.5—3.1 ohm	2G, 2J
PS1_STAT (Passenger-side air bag module (inflator No.1) circuit state)	NORMAL/ OPEN/ SHRT GND/ SHRT B+	• Related wiring harness normal: NORMAL • Related wiring harness circuit open: OPEN • Related wiring harness short to ground: SHRT GND • Related wiring harness short to power supply: SHRT B+	1M, 1P
PS2_STAT (Passenger-side air bag module (inflator No.2) circuit state)	NORMAL/ OPEN/ SHRT GND/ SHRT B+	• Related wiring harness normal: NORMAL • Related wiring harness circuit open: OPEN • Related wiring harness short to ground: SHRT GND • Related wiring harness short to power supply: SHRT B+	1A, 1D
PSB_P_ST (On demand passenger-side pre-tensioner seat belt circuit state)	NORMAL/ OPEN/ SHRT GND/ SHRT B+	• Related wiring harness normal: NORMAL • Related wiring harness circuit open: OPEN • Related wiring harness short to ground: SHRT GND • Related wiring harness short to power supply: SHRT B+	2G, 2J
RCM_VOLT (System IG1 voltage value)	V	• Ignition switch to ON position: B+ • Other: 0 V	1W

ACTIVE COMMAND MODE TABLE

A6E817401046W04

Command name	Definition	Operation
WRNLAMPCHM	Air bag system warning light	ON/OFF

T

DTC B1231

A6E817401046W05

DTC B1231	SAS unit activation (deployment) control freeze
DETECTION CONDITION	**Warning** • **Detection conditions are for understanding DTC outline before performing inspection. Performing inspection with only detection conditions may cause injury due to operating error or damage the system. When performing inspection, always follow inspection procedure.** • SAS unit determined collision

Diagnostic procedure

ACTION
Replace SAS unit. (See T–124 SAS UNIT REMOVAL/INSTALLATION)

DTC B1342

A6E817401046W06

DTC B1342	SAS unit
DETECTION CONDITION	**Warning** • **Detection conditions are for understanding DTC outline before performing inspection. Performing inspection with only detection conditions may cause injury due to operating error or damage the system. When performing inspection, always follow inspection procedure.** • Malfunction in SAS unit inner circuit
POSSIBLE CAUSE	• SAS unit malfunction

Diagnostic procedure

ACTION
• Replace SAS unit. (See T–124 SAS UNIT REMOVAL/INSTALLATION)

DTC B1869, B1870

A6E817401046W07

DTC	B1869	Air bag system warning light system circuit open or short to ground
	B1870	Air bag system warning light system circuit short to power supply
DETECTION CONDITION		**Warning** • **Detection conditions are for understanding DTC outline before performing inspection. Performing inspection with only detection conditions may cause injury due to operating error or damage the system. When performing inspection, always follow inspection procedure.** • Malfunction in air bag system warning light circuit
POSSIBLE CAUSE		• METER IG 15 A fuse malfunction • Instrument cluster malfunction • Malfunction of connectors between instrument cluster and SAS unit • Open or short circuit in wiring harness between METER IG 15 A fuse and instrument cluster • Open or short circuit in wiring harness between instrument cluster and SAS unit • SAS unit malfunction

INSTRUMENT CLUSTER CONNECTOR

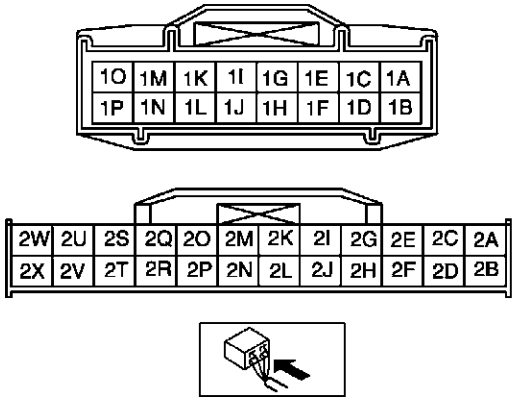

SAS UNIT CONNECTOR

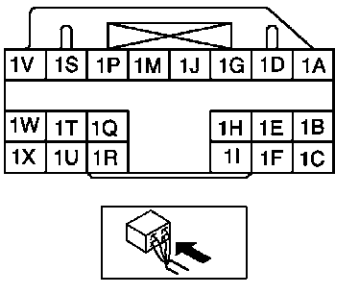

Diagnostic procedure

STEP	INSPECTION		ACTION
1	**INSPECT METER IG 15 A FUSE** • Turn ignition switch to LOCK position. • Disconnect negative battery cable. • Remove METER IG 15 A fuse. • Is fuse okay?	Yes	Reinstall METER IG 15 A fuse, then go to next step.
		No	Replace METER IG 15 A fuse.
2	**INSPECT FOR CONTINUITY BETWEEN METER IG 15 A FUSE AND INSTRUMENT CLUSTER** • Connect negative battery cable. • Turn ignition switch to ON position. • Measure voltage at instrument cluster connector terminal 2V. • Is voltage **more than 9 V**?	Yes	Go to next step.
		No	Repair wiring harness.
3	**INSPECT WIRING HARNESS BETWEEN INSTRUMENT CLUSTER AND SAS UNIT** **Warning** • **Handling air bag system components improperly can accidentally deploy air bag modules and pre-tensioner seat belts, which may seriously injure you. Read AIR BAG SYSTEM SERVICE WARNINGS before handling air bag system components. (See T–117 SERVICE WARNINGS)** • Turn ignition switch to LOCK position. • Disconnect negative battery cable and wait for **more than 1 minute**. • Remove column cover. • Disconnect clock spring connector. • Remove glove compartment. • Disconnect passenger-side air bag module connector. • Disconnect driver and passenger-side curtain air bag module connectors. (Vehicles with curtain air bag) • Disconnect driver and passenger-side side air bag module connectors. (Vehicles with side air bag) • Remove B-pillar lower trims. (Vehicle with pre-tensioner seat belt) • Disconnect driver and passenger-side pre-tensioner seat belt connectors. (Vehicle with pre-tensioner seat belt) • Turn up floor covering. • Disconnect all SAS unit connectors. • Disconnect instrument cluster. • Inspect following wiring harness between SAS unit and instrument cluster terminals for short to ground, short to power supply, and open circuit: — 1T—1O • Is wiring harness okay?	Yes	Go to next step.
		No	Replace wiring harness.
4	**INSPECT AIR BAG SYSTEM WARNING LIGHT** • Connect instrument cluster. • Turn ignition switch to ON position. • Is air bag system warning light illuminated?	Yes	Go to next step.
		No	Replace instrument cluster. (See T–72 INSTRUMENT CLUSTER REMOVAL/INSTALLATION)
5	**INSPECT AIR BAG SYSTEM WARNING LIGHT** • Using a jumper wire, cause a short circuit between instrument cluster terminal 1O and ground. • Does air bag system warning light go out?	Yes	**[Present malfunction diagnosis]** Replace SAS unit. (See T–124 SAS UNIT REMOVAL/INSTALLATION) **[Past malfunction diagnosis]** Troubleshooting completed.
		No	Replace instrument cluster. (See T–72 INSTRUMENT CLUSTER REMOVAL/INSTALLATION)

T

DTC B1871

A6E817401046W08

DTC B1871	Occupancy sensor system (communication error, sensor internal circuit abnomal)
DETECTION CONDITION	**Warning** • **Detection conditions are for understanding DTC outline before performing inspection. Performing inspection with only detection conditions may cause injury due to operating error or damage the system. When performing inspection, always follow inspection procedure.** • Malfunction in wiring harness between SAS unit and occupancy sensor • Malfunction in occupancy sensor circuit
POSSIBLE CAUSE	• Open or short circuit in wiring harness between METER IG 15 A fuse and occupancy sensor • Open or short circuit in wiring harness between SAS unit and occupancy sensor • Open circuit in wiring harness between occupancy sensor and ground • Occupancy sensor malfunction • SAS unit malfunction
SAS UNIT CONNECTOR 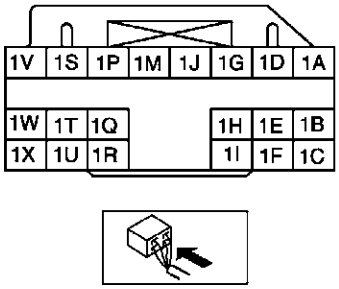 	OCCUPANCY SENSOR CONNECTOR 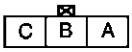 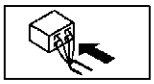

Diagnostic procedure

STEP	INSPECTION		ACTION
1	• Is vehicle equipped with passenger-side air bag cut-off function?	Yes	Go to next step.
		No	**[Present malfunction diagnosis]** Replace SAS unit. (See T–124 SAS UNIT REMOVAL/INSTALLATION) **[Past malfunction diagnosis]** Troubleshooting completed.

STEP	INSPECTION		ACTION
2	**INSPECT WIRING HARNESS BETWEEN OCCUPANCY SENSOR AND SAS UNIT** **Warning** • **Handling air bag system components improperly can accidentally deploy air bag modules, and pre-tensioner seat belts which may seriously injure you. Read AIR BAG SYSTEM SERVICE WARNINGS before handling air bag system components. (See T–117 SERVICE WARNINGS)** • Turn ignition switch to LOCK position. • Disconnect negative battery cable and wait for **more than 1 minute**. • Remove column cover. • Disconnect clock spring connector. • Remove glove compartment. • Disconnect passenger-side air bag module connector. • Disconnect driver and passenger-side side air bag module connectors. (Vehicle with side air bag) • Disconnect driver and passenger-side curtain air bag module connectors. (Vehicles with curtain air bag) • Remove B-pillar lower trim. (Vehicle with pre-tensioner seat belt) • Disconnect drive- and passenger-side pre-tensioner seat belt connectors. (Vehicle with pre-tensioner seat belt) • Turn up floor covering. • Disconnect all SAS unit connectors. • Disconnect occupancy sensor connector. • Connect negative battery cable. • Inspect following wiring harness between SAS unit and occupancy sensor terminals for short to ground, short to power supply, and open circuit: — 1l—B • Is wiring harness okay?	Yes	Go to next step.
		No	Replace wiring harness.
3	**INSPECT WIRING HARNESS BETWEEN METER IG 15 A FUSE AND OCCUPANCY SENSOR** • Connect negative battery cable. • Turn ignition switch to ON position. • Measure voltage at occupancy connector terminal A. • Is voltage **more than 9V**?	Yes	**[Present malfunction diagnosis]**Go to next step. **[Past malfunction diagnosis]** Troubleshooting completed.
		No	Replace wiring harness.
4	**VERIFY WHETHER MALFUNCTION IS IN OCCUPANCY SENSOR OR SAS UNIT** • Turn ignition switch to LOCK position. • Disconnect negative battery cable and wait for **more than 1 minute**. • Connect all SAS unit connectors. • Connect drive- and passenger-side pre-tensioner seat belt connectors. (Vehicle with pre-tensioner seat belt) • Connect driver and passenger-side curtain air bag module connectors. (Vehicles with curtain air bag) • Connect driver and passenger-side side air bag module connectors. (Vehicle with side air bag) • Connect passenger-side air bag module connector. • Connect clock spring connector. • Connect occupancy sensor connector. • Short occupancy sensor connector terminal B to ground. • Connect negative battery cable. • Turn ignition switch to ON position. • Is DTC B1871 indicated?	Yes	Replace SAS unit. (See T–124 SAS UNIT REMOVAL/INSTALLATION)
		No	Replace seat cushion. (See S–106 FRONT SEAT DISASSEMBLY/ ASSEMBLY)

T

DTC B1877, B1878, B1879, B1885

A6E817401046W09

DTC	B1877	**Driver-side pre-tensioner seat belt system resistance high**
	B1878	**Driver-side pre-tensioner seat belt system circuit short to power supply**
	B1879	**Driver-side pre-tensioner seat belt system circuit short to ground**
	B1885	**Driver-side pre-tensioner seat belt system resistance low**
DETECTION CONDITION		**Warning** • **Detection conditions are for understanding DTC outline before performing inspection. Performing inspection with only detection conditions may cause injury due to operating error or damage the system. When performing inspection, always follow inspection procedure.** • Abnormal resistance (other than **1.5—3.1 ohm**) detected in driver-side pre-tensioner seat belt circuit • Malfunction in wiring harness between driver-side pre-tensioner seat belt and SAS unit
POSSIBLE CAUSE		• Open or short circuit in wiring harness between driver-side pre-tensioner seat belt and SAS unit • Driver-side pre-tensioner seat belt malfunction • SAS unit malfunction

DRIVER-SIDE PRE-TENSIONER SEAT BELT CONNECTOR

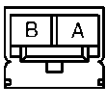

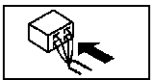

Diagnostic procedure

STEP	INSPECTION		ACTION
1	**INSPECT DRIVER-SIDE PRE-TENSIONER SEAT BELT** • Check following PID/DATA monitor, using **SST** (WDS or equivalent). (See T–195 PID/DATA MONITOR TABLE) — DR_PTENS • Is resistant value of driver-side pre-tensioner seat belt normal? — Resistance: **1.5—3.1 ohm**	Yes	**Present malfunction diagnosis:** • Replace SAS unit. (See T–124 SAS UNIT REMOVAL/INSTALLATION) **Past malfunction diagnosis:** • Troubleshooting completed.
		No	Go to next step.
2	**INSPECT DRIVER-SIDE PRE-TENSIONER SEAT BELT CONNECTOR** **Warning** • **Handling air bag system components improperly can accidentally deploy air bag modules and pre-tensioner seat belts, which may seriously injure you. Read AIR BAG SYSTEM SERVICE WARNINGS before handling air bag system components. (See T–117 SERVICE WARNINGS)** • Turn ignition switch to LOCK position. • Disconnect negative battery cable and wait for **more than 1 minute**. • Remove driver's side B-pillar lower trim. • Disconnect driver-side pre-tensioner seat belt connector. • Is there cracking or chipping in driver-side pre-tensioner seat belt connector?	Yes	Replace wiring harness.
		No	Go to next step.

STEP	INSPECTION		ACTION
3	**VERIFY WHETHER MALFUNCTION IS IN DRIVER-SIDE PRE-TENSIONER SEAT BELT OR RELATED WIRING HARNESS** • Connect leads of **SST** (Fuel and thermometer checker) or apply 2 ohm resistor to driver-side pre-tensioner seat belt connector terminal A and B. • Set resistance of **SST** (Fuel and thermometer checker) to 2 ohm. • Connect negative battery cable. • Turn ignition switch to ON position. • Check following PID/DATA monitor, using **SST** (WDS or equivalent). (See T–195 PID/DATA MONITOR TABLE) — DSB_P_ST • Is related wiring harness normal?	Yes	Replace driver-side pre-tensioner seat belt. (See S–100 FRONT SEAT BELT REMOVAL/INSTALLATION)
		No	Replace wiring harness, then go to next step.
4	**INSPECT SAS UNIT** • Turn ignition switch to LOCK position. • Disconnect negative battery cable and wait for **more than 1 minute**. • Connect driver-side pre-tensioner seat belt connector. • Are DTCs B1877, B1878, B1879 and/or B1885 indicated?	Yes	**Present malfunction diagnosis:** • Replace SAS unit. (See T–124 SAS UNIT REMOVAL/INSTALLATION) **Past malfunction diagnosis:** • Troubleshooting completed.
		No	Troubleshooting completed.

DTC B1881, B1882, B1883, B1886

A6E817401046W10

DTC	**B1881**	**Passenger-side pre-tensioner seat belt system resistance high**
	B1882	**Passenger-side pre-tensioner seat belt system circuit short to power supply**
	B1883	**Passenger-side pre-tensioner seat belt system circuit short to ground**
	B1886	**Passenger-side pre-tensioner seat belt system resistance low**
DETECTION CONDITION		**Warning** • **Detection conditions are for understanding DTC outline before performing inspection. Performing inspection with only detection conditions may cause injury due to operating error or damage the system. When performing inspection, always follow inspection procedure.** • Abnormal resistance (other than **1.5—3.1 ohm**) detected in passenger-side pre-tensioner seat belt circuit • Malfunction in wiring harness between passenger-side pre-tensioner seat belt and SAS unit
POSSIBLE CAUSE		• Open or short circuit in wiring harness between passenger-side pre-tensioner seat belt and SAS unit • Passenger-side pre-tensioner seat belt malfunction • SAS unit malfunction

PASSENGER-SIDE PRE-TENSIONER
SEAT BELT CONNECTOR

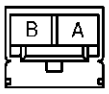

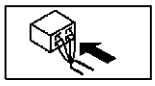

T

Diagnostic procedure

STEP	INSPECTION		ACTION
1	**INSPECT PASSENGER-SIDE PRE-TENSIONER SEAT BELT** • Check following PID/DATA monitor, using **SST** (WDS or equivalent). (See T–195 PID/DATA MONITOR TABLE) — PS_PTENS • Is resistant value of passenger-side pre-tensioner seat belt normal? — Resistance: **1.5—3.1 ohm**	Yes	**Present malfunction diagnosis:** • Replace SAS unit. (See T–124 SAS UNIT REMOVAL/INSTALLATION) **Past malfunction diagnosis:** • Troubleshooting completed.
		No	Go to next step.
2	**INSPECT PASSENGER-SIDE PRE-TENSIONER SEAT BELT CONNECTOR** **Warning** • **Handling air bag system components improperly can accidentally deploy air bag modules and pre-tensioner seat belts, which may seriously injure you. Read AIR BAG SYSTEM SERVICE WARNINGS before handling air bag system components. (See T–117 SERVICE WARNINGS)** • Turn ignition switch to LOCK position. • Disconnect negative battery cable and wait for **more than 1 minute**. • Remove passenger's side B-pillar lower trim. • Disconnect passenger-side pre-tensioner seat belt connector. • Is there cracking or chipping in passenger-side pre-tensioner seat belt connector?	Yes	Replace wiring harness.
		No	Go to next step.
3	**VERIFY WHETHER MALFUNCTION IS IN PASSENGER-SIDE PRE-TENSIONER SEAT BELT OR RELATED WIRING HARNESS** • Connect leads of **SST** (Fuel and thermometer checker) or apply 2 ohm resistor to passenger-side pre-tensioner seat belt connector terminal A and B. • Set resistance of **SST** (Fuel and thermometer checker) to 2 ohm. • Connect negative battery cable. • Turn ignition switch to ON position. • Check following PID/DATA monitor, using **SST** (WDS or equivalent). (See T–195 PID/DATA MONITOR TABLE) — PSB_P_ST • Is related wiring harness normal?	Yes	Replace passenger-side pre-tensioner seat belt. (See S–100 FRONT SEAT BELT REMOVAL/INSTALLATION)
		No	Replace wiring harness, then go to next step.
4	**INSPECT SAS UNIT** • Turn ignition switch to LOCK position. • Disconnect negative battery cable and wait for **more than 1 minute**. • Connect passenger-side pre-tensioner seat belt connector. • Are DTCs B1881, B1882, B1883 and/or B1886 indicated?	Yes	**Present malfunction diagnosis:** • Replace SAS unit. (See T–124 SAS UNIT REMOVAL/INSTALLATION) **Past malfunction diagnosis:** • Troubleshooting completed.
		No	Troubleshooting completed.

DTC B1884, B1890

A6E817401046W11

DTC	B1884	**Passenger-side air bag cut-off indicator light system circuit open or short to ground**
	B1890	**Passenger-side air bag cut-off indicator light system circuit short to power supply**
DETECTION CONDITION		**Warning** • **Detection conditions are for understanding DTC outline before performing inspection. Performing inspection with only detection conditions may cause injury due to operating error or damage the system. When performing inspection, always follow inspection procedure.** • Malfunction in passenger-side air bag cut-off indicator light circuit
POSSIBLE CAUSE		• Open or short circuit in wiring harness between SAS unit and passenger-side air bag cut-off indicator light • Open circuit in wiring harness between METER IG 15 A fuse and passenger-side air bag cut-off indicator light • Passenger-side air bag cut-off indicator light malfunction • SAS unit malfunction

SAS UNIT CONNECTOR

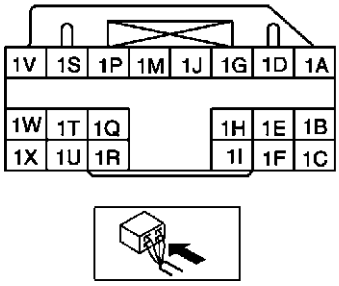

PASSENGER-SIDR AIR BAG CUT-OFF INDICATOR LIGHT



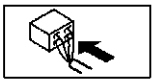

Diagnostic procedure

STEP	INSPECTION		ACTION
1	• Is vehicle equipped with passenger-side air bag cut-off function?	Yes	**[Present malfunction diagnosis]** Go to next step. **[Past malfunction diagnosis]** Go to Step 4.
		No	**[Present malfunction diagnosis]** Replace SAS unit. (See T–124 SAS UNIT REMOVAL/INSTALLATION) **[Past malfunction diagnosis]** Troubleshooting completed.
2	**INSPECT OPERATION OF PASSENGER-SIDE AIR BAG CUT-OFF INDICATOR LIGHT** • Turn ignition switch to LOCK position and wait for **more than 1 minute**. • Turn ignition switch to ON position. • Does passenger-side air bag cut-off indicator light illuminate?	Yes	Go to next step.
		No	Go to Step 6.
3	**INSPECT OPERATION OF PASSENGER-SIDE AIR BAG CUT-OFF INDICATOR LIGHT** • Without child restraint seat on passenger's seat, does passenger-side air bag cut-off indicator light go off after **approximately 6 seconds**?	Yes	Replace SAS unit. (See T–124 SAS UNIT REMOVAL/INSTALLATION)
		No	Go to next step.

T

STEP	INSPECTION		ACTION
4	**INSPECT WIRING HARNESS BETWEEN PASSENGER-SIDE AIR BAG CUT-OFF INDICATOR LIGHT AND SAS UNIT** **Warning** • **Handling air bag system components improperly can accidentally deploy air bag modules, and pre-tensioner seat belts which may seriously injure you. Read AIR BAG SYSTEM SERVICE WARNINGS before handling air bag system components. (See T–117 SERVICE WARNINGS)** • Turn ignition switch to LOCK position. • Disconnect negative battery cable and wait for **more than 1 minute**. • Remove column cover. • Disconnect clock spring connector. • Remove glove compartment. • Disconnect passenger-side air bag module connector. • Disconnect driver and passenger-side side air bag module connectors. (Vehicle with side air bag) • Disconnect driver and passenger-side curtain air bag module connectors. (Vehicles with curtain air bag) • Remove B-pillar lower trim. (Vehicle with pre-tensioner seat belt) • Disconnect drive- and passenger-side pre-tensioner seat belt connectors. (Vehicle with pre-tensioner seat belt) • Turn up floor covering. • Disconnect all SAS unit connectors. • Connect negative battery cable. • Turn ignition switch to ON position. • Measure voltage at 1U of SAS unit connector terminal. • Is voltage **more than 9V**?	Yes	**[Present malfunction diagnosis]** Replace SAS unit. (See T–124 SAS UNIT REMOVAL/INSTALLATION) **[Past malfunction diagnosis]** Go to next step.
		No	Go to next step.
5	**INSPECT WIRING HARNESS BETWEEN PASSENGER-SIDE AIR BAG CUT-OFF INDICATOR LIGHT AND SAS UNIT** • Turn ignition switch to LOCK position. • Disconnect negative battery cable. • Remove center panel module. (See T–96 CENTER PANEL MODULE REMOVAL/INSTALLATION) • Inspect following wiring harness between passenger-side air bag cut-off indicator light and SAS unit terminals for short to ground: — A—1U • Is wiring harness okay?	Yes	**[Present malfunction diagnosis]** Replace passenger-side air bag cut-off indicator light. **[Past malfunction diagnosis]** Go to next step.
		No	Replace wiring harness.
6	**INSPECT PASSENGER-SIDE AIR BAG CUT-OFF INDICATOR LIGHT BULB** • Turn ignition switch to LOCK position. • Disconnect negative battery cable and wait for **more than 1 minutes.** • Remove center panel module. (See T–96 CENTER PANEL MODULE REMOVAL/INSTALLATION) • Remove passenger-side air bag cut-off indicator light bulb. • Is passenger-side air bag cut-off indicator light bulb okay?	Yes	Reinstall passenger-side air bag cut-off indicator light bulb, then go to next step.
		No	Replace passenger-side air bag cut-off indicator light bulb.

STEP	INSPECTION		ACTION
7	**INSPECT PASSENGER-SIDE AIR BAG CUT-OFF INDICATOR LIGHT** • Turn ignition switch to LOCK position. • Disconnect negative battery cable and wait for **more than 1 minutes.** • Remove center panel module. (See T–96 CENTER PANEL MODULE REMOVAL/INSTALLATION) • Inspect continuity wiring harness between passenger-side air bag cut-off indicator light terminals A and B. • Is passenger-side air bag cut-off indicator light normal?	Yes	Go to next step.
		No	Replace passenger-side air bag cut-off indicator light .
8	**INSPECT FOR CONTINUITY BETWEEN METER IG 15 A FUSE AND PASSENGER-SIDE AIR BAG CUT-OFF INDICATOR LIGHT** • Connect negative battery cable. • Turn ignition switch to ON position. • Measure voltage at terminal B of passenger-side air bag cut-off indicator light connector. • Is voltage **more than 9V**?	Yes	Go to next step.
		No	Replace wiring harness.
9	**INSPECT WIRING HARNESS BETWEEN PASSENGER-SIDE AIR BAG CUT-OFF INDICATOR LIGHT AND SAS UNIT** **Warning** • **Handling air bag system components improperly can accidentally deploy air bag modules, and pre-tensioner seat belts which may seriously injure you. Read AIR BAG SYSTEM SERVICE WARNINGS before handling air bag system components. (See T–117 SERVICE WARNINGS)** • Turn ignition switch to LOCK position. • Disconnect negative battery cable and wait for **more than 1 minute**. • Remove column cover. • Disconnect clock spring connector. • Remove glove compartment. • Disconnect passenger-side air bag module connector. • Disconnect driver and passenger-side side air bag module connectors. (Vehicle with side air bag) • Disconnect driver and passenger-side curtain air bag module connectors. (Vehicles with curtain air bag) • Remove B-pillar lower trims. (Vehicle with pre-tensioner seat belt) • Disconnect driver and passenger-side pre-tensioner seat belt connectors. (Vehicle with pre-tensioner seat belt) • Turn up floor covering. • Disconnect all SAS unit connectors. • Inspect following wiring harness between passenger-side air bag cut-off indicator light and SAS unit terminals for short to ground or open circuit: — A—1U • Is wiring harness okay?	Yes	**[Present malfunction diagnosis]** Replace SAS unit. (See T–124 SAS UNIT REMOVAL/INSTALLATION) **[Part malfunction diagnosis]** Troubleshooting completed.
		No	Replace wiring harness.

T

DTC B1913, B1916, B1932, B1934

A6E817401046W12

DTC	B1913	Driver-side air bag module (inflator No.1) system circuit short to ground
	B1916	Driver-side air bag module (inflator No.1) system circuit short to power supply
	B1932	Driver-side air bag module (inflator No.1) system resistance high
	B1934	Driver-side air bag module (inflator No.1) system resistance low
DETECTION CONDITION		**Warning** • **Detection conditions are for understanding DTC outline before performing inspection. Performing inspection with only detection conditions may cause injury due to operating error or damage the system. When performing inspection, always follow inspection procedure.** • Abnormal resistance (other than **1.5—3.7 ohm**) detected in driver-side air bag module (inflator No.1) circuit • Malfunction in wiring harness between driver-side air bag module (inflator No.1) and SAS unit
POSSIBLE CAUSE		• Open or short circuit in wiring harness between clock spring and SAS unit • Clock spring malfunction • Driver-side air bag module (inflator No.1) malfunction • SAS unit malfunction

SAS UNIT CONNECTOR

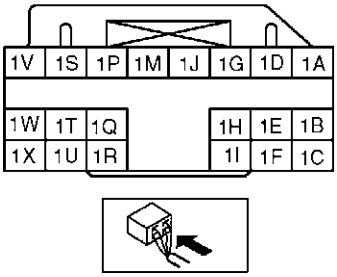

CLOCK SPRING CONNECTOR

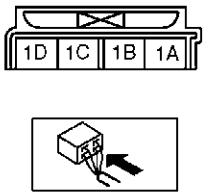

DRIVER-SIDE AIR BAG MODULE CONNECTOR (CLOCK SPRING)

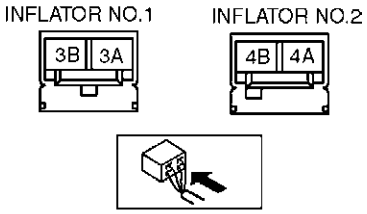

Diagnostic procedure

STEP	INSPECTION		ACTION
1	**INSPECT DRIVER-SIDE AIR BAG MODULE (INFLATOR NO.1)** • Check following PID/DATA monitor, using **SST** (WDS or equivalent). (See T–195 PID/DATA MONITOR TABLE) — DABAGR • Is resistant value of driver-side air bag module normal? — Resistance: **1.5—3.7 ohm**	Yes	**[Present malfunction diagnosis]** Replace SAS unit. (See T–124 SAS UNIT REMOVAL/INSTALLATION) **[Part malfunction diagnosis]** Troubleshooting completed.
		No	Go to next step.
2	**INSPECT DRIVER-SIDE AIR BAG MODULE CONNECTOR (CLOCK SPRING)** **Warning** • **Handling air bag system components improperly can accidentally deploy air bag modules and pre-tensioner seat belts, which may seriously injure you. Read AIR BAG SYSTEM SERVICE WARNINGS before handling air bag system components. (See T–117 SERVICE WARNINGS)** • Turn ignition switch to LOCK position. • Disconnect negative battery cable and wait for **more than 1 minute**. • Remove driver-side air bag module. • Is there cracking or chipping in driver-side air bag module connector?	Yes	Replace wiring harness.
		No	Go to next step.

STEP	INSPECTION		ACTION
3	**VERIFY WHETHER MALFUNCTION IS IN DRIVER-SIDE AIR BAG MODULE (INFLATOR NO.1) OR RELATED WIRING HARNESS** • Connect leads of **SST** (Fuel and thermometer checker) or apply 2 ohm resistor to driver-side air bag module (inflator No.1) connector terminal 3A and 3B, and driver-side air bag module (inflator No.2) connector terminal 4A and 4B. • Set resistance of **SST** (Fuel and thermometer checker) to 2 ohm. • Connect negative battery cable. • Turn ignition switch to ON position. • Check following PID/DATA monitor, using **SST** (WDS or equivalent). (See T–195 PID/DATA MONITOR TABLE) — OD_DAB1_ST • Is related wiring harness normal?	Yes	Replace driver-side air bag module. (See T–120 DRIVER-SIDE AIR BAG MODULE REMOVAL/INSTALLATION)
		No	Go to next step.
4	**INSPECT CLOCK SPRING** • Inspect clock spring. (See T–126 CLOCK SPRING INSPECTION) • Is clock spring normal?	Yes	Go to next step.
		No	Replace clock spring. (See T–125 CLOCK SPRING REMOVAL/INSTALLATION)
5	**INSPECT WIRING HARNESS BETWEEN CLOCK SPRING AND SAS UNIT** • Turn ignition switch to LOCK position. • Disconnect negative battery cable and wait for **more than 1 minute**. • Remove column cover. • Disconnect clock spring connector. • Remove glove compartment. • Disconnect passenger-side air bag module connector. • Disconnect driver and passenger-side side air bag module connectors. (Vehicle with side air bag) • Disconnect driver and passenger-side curtain air bag module connectors. (Vehicle with curtain air bag) • Remove B-pillar lower trim. (Vehicle with pre-tensioner seat belt) • Disconnect driver and passenger-side pre-tensioner seat belt connectors. (Vehicle with pre-tensioner seat belt) • Turn up floor covering. • Disconnect all SAS unit connectors. • Inspect following wiring harnesses between SAS unit and clock spring terminals for short to ground, short to power supply, and open circuit: — 1S—1D — 1V—1C • Is wiring harness okay?	Yes	**Present malfunction diagnosis:** • Replace SAS unit. (See T–124 SAS UNIT REMOVAL/INSTALLATION) **Past malfunction diagnosis:** • Troubleshooting completed.
		No	Replace wiring harnesses.

T

DTC B1913, B1925, B1933, B1935

A6E817401046W13

DTC	B1913	**Passenger-side air bag module (inflator No.1) system circuit short to ground**
	B1925	**Passenger-side air bag module (inflator No.1) system circuit short to power supply**
	B1933	**Passenger-side air bag module (inflator No.1) system resistance high**
	B1935	**Passenger-side air bag module (inflator No.1) system resistance low**
DETECTION CONDITION		**Warning** • **Detection conditions are for understanding DTC outline before performing inspection. Performing inspection with only detection conditions may cause injury due to operating error or damage the system. When performing inspection, always follow inspection procedure.** • Abnormal resistance (other than **1.4—2.9 ohm**) detected in passenger-side air bag module (inflator No.1) circuit • Malfunction in wiring harness between passenger-side air bag module (inflator No.1) and SAS unit
POSSIBLE CAUSE		• Open or short circuit in wiring harness between passenger-side air bag module (inflator No.1) and SAS unit • Passenger-side air bag module (inflator No.1) malfunction • SAS unit malfunction

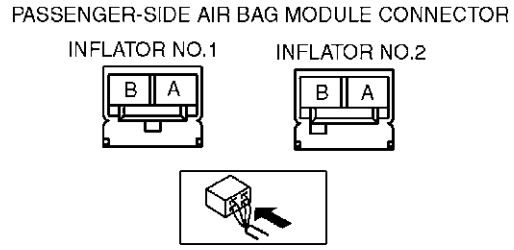

Diagnostic procedure

STEP	INSPECTION		ACTION
1	**INSPECT PASSENGER-SIDE AIR BAG MODULE (INFLATOR NO.1)** • Check following PID/DATA monitor, using **SST** (WDS or equivalent). (See T–195 PID/DATA MONITOR TABLE) — PABAGR • Is resistant value of passenger-side air bag module normal? — Resistance: **1.4—2.9 ohm**	Yes	**Present malfunction diagnosis:** • Replace SAS unit. (See T–124 SAS UNIT REMOVAL/INSTALLATION) **Past malfunction diagnosis:** • Troubleshooting completed.
		No	Go to next step.
2	**INSPECT PASSENGER-SIDE AIR BAG MODULE (INFLATOR NO.1) CONNECTOR** **Warning** • **Handling air bag system components improperly can accidentally deploy air bag modules and pre-tensioner seat belts, which may seriously injure you. Read AIR BAG SYSTEM SERVICE WARNINGS before handling air bag system components. (See T–117 SERVICE WARNINGS)** • Turn ignition switch to LOCK position. • Disconnect negative battery cable and wait for **more than 1 minute**. • Remove glove compartment. • Disconnect passenger-side air bag module connector. • Is there cracking or chipping in passenger-side air bag module connector?	Yes	Replace wiring harness.
		No	Go to next step.

STEP	INSPECTION		ACTION
3	**VERIFY WHETHER MALFUNCTION IS IN PASSENGER-SIDE AIR BAG MODULE (INFLATOR NO.1) OR RELATED WIRING HARNESS** • Connect leads of **SST** (Fuel and thermometer checker) or apply 2 ohm resistor to passenger-side air bag module (inflator No.1) connector terminal A and B, and passenger-side air bag module (inflator No.2) connector terminal A and B. • Set resistance of **SST** (Fuel and thermometer checker) to 2 ohm. • Connect negative battery cable. • Turn ignition switch to ON position. • Check following PID/DATA monitor, using **SST** (WDS or equivalent). (See T–195 PID/DATA MONITOR TABLE) — DO_PAB1ST • Is related wiring harness normal?	Yes	Replace passenger-side air bag module. (See T–121 PASSENGER-SIDE AIR BAG MODULE REMOVAL/INSTALLATION)
		No	Replace wiring harness, then go to next step.
4	**INSPECT SAS UNIT** • Turn ignition switch to LOCK position. • Disconnect negative battery cable and wait for **more than 1 minute**. • Connect passenger-side air bag module connector. • Are DTCs B1913, B1925, B1933 and/or B1935 indicated?	Yes	**Present malfunction diagnosis:** • Replace SAS unit. (See T–124 SAS UNIT REMOVAL/INSTALLATION) **Past malfunction diagnosis:** • Troubleshooting completed.
		No	Troubleshooting completed.

DTC B1921

A6E817401046W14

DTC B1921	**Deployment prohibited because configuration is not set**
DETECTION CONDITION	**Warning** • **Detection conditions are for understanding DTC outline before performing inspection. Performing inspection with only detection conditions may cause injury due to operating error or damage the system. When performing inspection, always follow inspection procedure.** • SAS unit configuration has not been set
POSSIBLE CAUSE	• SAS unit configuration has not been set • SAS unit malfunction

Diagnostic procedure

INSPECTION		ACTION
CONFIGRATION • Configurate SAS unit, using **SST** (WDS or equivalent). • Is DTC B1921 indicated?	Yes	**[Present malfunction diagnosis]** Replace SAS unit. (See T–124 SAS UNIT REMOVAL/INSTALLATION) **[Past malfunction diagnosis]** Troubleshooting completed.
	No	Troubleshooting completed.

DTC B1992, B1993, B1994, B1995

A6E817401046W15

DTC	B1992	**Driver-side side air bag module system circuit short to power supply**
	B1993	**Driver-side side air bag module system circuit short to ground**
	B1994	**Driver-side side air bag module system resistance high**
	B1995	**Driver-side side air bag module system resistance low**
DETECTION CONDITION		**Warning** • **Detection conditions are for understanding DTC outline before performing inspection. Performing inspection with only detection conditions may cause injury due to operating error or damage the system. When performing inspection, always follow inspection procedure.** • Abnormal resistance (other than **1.4—3.2 ohm**) detected in driver-side side air bag module circuit • Malfunction in wiring harness between driver-side side air bag module and SAS unit
POSSIBLE CAUSE		• Open or short circuit in wiring harness between driver-side side air bag module and SAS unit • Driver-side side air bag module malfunction • SAS unit malfunction

DRIVER-SIDE SIDE AIR BAG MODULE CONNECTOR

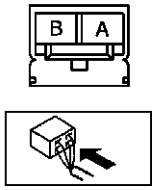

Diagnostic procedure

STEP	INSPECTION		ACTION
1	**INSPECT DRIVER-SIDE SIDE AIR BAG MODULE** • Check following PID/DATA monitor, using **SST** (WDS or equivalent). (See T–195 PID/DATA MONITOR TABLE) — DS_AB • Is resistant value of driver-side side air bag module normal? — Resistance: **1.4—3.2 ohm**	Yes	**Present malfunction diagnosis:** • Replace SAS unit. (See T–124 SAS UNIT REMOVAL/INSTALLATION) **Past malfunction diagnosis:** • Troubleshooting completed.
		No	Go to next step.
2	**INSPECT DRIVER-SIDE SIDE AIR BAG MODULE CONNECTOR** **Warning** • **Handling air bag system components improperly can accidentally deploy air bag modules and pre-tensioner seat belts, which may seriously injure you. Read AIR BAG SYSTEM SERVICE WARNINGS before handling air bag system components. (See T–117 SERVICE WARNINGS)** • Turn ignition switch to LOCK position. • Disconnect negative battery cable and wait for **more than 1 minute**. • Remove driver-side side air bag module. • Is there cracking or chipping in driver-side side air bag module connector?	Yes	Replace wiring harness.
		No	Go to next step.

STEP	INSPECTION		ACTION
3	**VERIFY WHETHER MALFUNCTION IS IN DRIVER-SIDE SIDE AIR BAG MODULE OR RELATED WIRING HARNESS** • Connect leads of **SST** (Fuel and thermometer checker) or apply 2 ohm resistor to driver-side side air bag module connector terminal A and B. • Set resistance of **SST** (Fuel and thermometer checker) to 2 ohm. • Connect negative battery cable. • Turn ignition switch to ON position. • Check following PID/DATA monitor, using **SST** (WDS or equivalent). (See T–195 PID/DATA MONITOR TABLE) — OD_DSAB_ST • Is related wiring harness normal?	Yes	Replace driver-side side air bag module. (See T–121 SIDE AIR BAG MODULE REMOVAL/INSTALLATION)
		No	Replace wiring harness, then go to next step.
4	**INSPECT SAS UNIT** • Turn ignition switch to LOCK position. • Disconnect negative battery cable and wait for **more than 1 minute**. • Connect driver-side side air bag module connector. • Are DTCs B1992, B1993, B1994 and/or B1995 indicated?	Yes	**Present malfunction diagnosis:** • Replace SAS unit. (See T–124 SAS UNIT REMOVAL/INSTALLATION) **Past malfunction diagnosis:** • Troubleshooting completed.
		No	Troubleshooting completed.

DTC B1996, B1997, B1998, B1999

A6E817401046W16

DTC	B1996	**Passenger-side side air bag module system circuit short to power supply**
	B1997	**Passenger-side side air bag module system circuit short to ground**
	B1998	**Passenger-side side air bag module system resistance high**
	B1999	**Passenger-side side air bag module system resistance low**
DETECTION CONDITION		**Warning** • **Detection conditions are for understanding DTC outline before performing inspection. Performing inspection with only detection conditions may cause injury due to operating error or damage the system. When performing inspection, always follow inspection procedure.** • Abnormal resistance (other than **1.4—3.2 ohm**) detected in passenger-side side air bag module circuit • Malfunction in wiring harness between passenger-side side air bag module and SAS unit
POSSIBLE CAUSE		• Open or short circuit in wiring harness between passenger-side side air bag module and SAS unit • Passenger-side side air bag module malfunction • SAS unit malfunction

PASSENGER-SIDE SIDE AIR BAG MODULE CONNECTOR

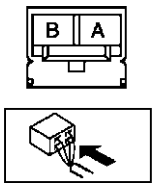

T

Diagnostic procedure

STEP	INSPECTION		ACTION
1	**INSPECT PASSENGER-SIDE SIDE AIR BAG MODULE** • Check following PID/DATA monitor, using **SST** (WDS or equivalent). (See T–195 PID/DATA MONITOR TABLE) — PS_AB • Is resistant value of passenger-side side air bag module normal? — Resistance: **1.4—3.2 ohm**	Yes	**Present malfunction diagnosis:** • Replace SAS unit. (See T–124 SAS UNIT REMOVAL/INSTALLATION) **Past malfunction diagnosis:** • Troubleshooting completed.
		No	Go to next step.
2	**INSPECT PASSENGER-SIDE SIDE AIR BAG MODULE CONNECTOR** **Warning** • **Handling air bag system components improperly can accidentally deploy air bag modules and pre-tensioner seat belts, which may seriously injure you. Read AIR BAG SYSTEM SERVICE WARNINGS before handling air bag system components.** **(See T–117 SERVICE WARNINGS)** • Turn ignition switch to LOCK position. • Disconnect negative battery cable and wait for **more than 1 minute**. • Remove passenger-side side air bag module. • Is there cracking or chipping in passenger-side side air bag module connector?	Yes	Replace wiring harness.
		No	Go to next step.
3	**VERIFY WHETHER MALFUNCTION IS IN PASSENGER-SIDE SIDE AIR BAG MODULE OR RELATED WIRING HARNESS** • Connect leads of **SST** (Fuel and thermometer checker) or apply 2 ohm resistor to passenger-side side air bag module connector terminal A and B. • Set resistance of **SST** (Fuel and thermometer checker) to 2 ohm. • Connect negative battery cable. • Turn ignition switch to ON position. • Check following PID/DATA monitor, using **SST** (WDS or equivalent). (See T–195 PID/DATA MONITOR TABLE) — DSB_P_ST • Is related wiring harness normal?	Yes	Replace passenger-side side air bag module. (See T–121 SIDE AIR BAG MODULE REMOVAL/INSTALLATION)
		No	Replace wiring harness, then go to next step.
4	**INSPECT SAS UNIT** • Turn ignition switch to LOCK position. • Disconnect negative battery cable and wait for **more than 1 minute**. • Connect passenger-side side air bag module connector. • Are DTCs B1996, B1997, B1998 and/or B1999 indicated?	Yes	**Present malfunction diagnosis:** • Replace SAS unit. (See T–124 SAS UNIT REMOVAL/INSTALLATION) **Past malfunction diagnosis:** • Troubleshooting completed.
		No	Troubleshooting completed.

DTC B2228, B2230, B2232, B2234

A6E817401046W17

DTC	B2228	**Driver-side air bag module (inflator No.2) system circuit short to ground**
	B2230	**Driver-side air bag module (inflator No.2) system circuit short to power supply**
	B2232	**Driver-side air bag module (inflator No.2) system resistance high**
	B2234	**Driver-side air bag module (inflator No.2) system resistance low**
DETECTION CONDITION		**Warning** • **Detection conditions are for understanding DTC outline before performing inspection. Performing inspection with only detection conditions may cause injury due to operating error or damage the system. When performing inspection, always follow inspection procedure.** • Abnormal resistance (other than **1.5—3.7 ohm**) detected in driver-side air bag module (inflator No.2) circuit • Malfunction in wiring harness between driver-side air bag module (inflator No.2) and SAS unit
POSSIBLE CAUSE		• Open or short circuit in wiring harness between clock spring and SAS unit • Clock spring malfunction • Driver-side air bag module (inflator No.2) malfunction • SAS unit malfunction

SAS UNIT CONNECTOR

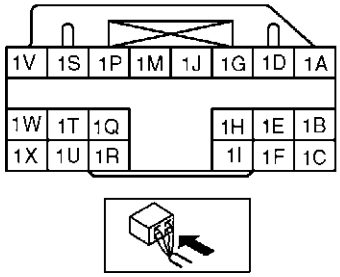

CLOCK SPRING CONNECTOR

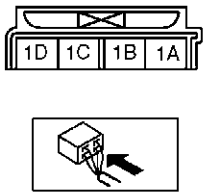

DRIVER-SIDE AIR BAG MODULE CONNECTOR (CLOCK SPRING)

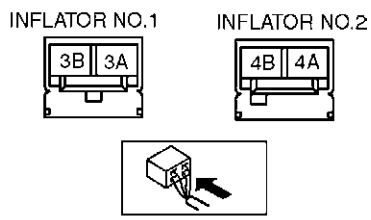

T

Diagnostic procedure

STEP	INSPECTION		ACTION
1	**INSPECT DRIVER-SIDE AIR BAG MODULE (INFLATOR NO.2)** • Check following PID/DATA monitor, using **SST** (WDS or equivalent). (See T–195 PID/DATA MONITOR TABLE) — D_ABAGR2 • Is resistant value of driver-side air bag module normal? — Resistance: **1.5—3.7 ohm**	Yes	**Present malfunction diagnosis:** • Replace SAS unit. (See T–124 SAS UNIT REMOVAL/INSTALLATION) **Past malfunction diagnosis:** • Troubleshooting completed.
		No	Go to next step.
2	**INSPECT DRIVER-SIDE AIR BAG MODULE CONNECTOR (CLOCK SPRING)** **Warning** • **Handling air bag system components improperly can accidentally deploy air bag modules and pre-tensioner seat belts, which may seriously injure you. Read AIR BAG SYSTEM SERVICE WARNINGS before handling air bag system components. (See T–117 SERVICE WARNINGS)** • Turn ignition switch to LOCK position. • Disconnect negative battery cable and wait for **more than 1 minute**. • Remove driver-side air bag module. • Is there cracking or chipping in driver-side air bag module connector?	Yes	Replace wiring harness.
		No	Go to next step.

STEP	INSPECTION		ACTION
3	**VERIFY WHETHER MALFUNCTION IS IN DRIVER-SIDE AIR BAG MODULE (INFLATOR NO.2) OR RELATED WIRING HARNESS** • Connect leads of **SST** (Fuel and thermometer checker) or apply 2 ohm resistor to driver-side air bag module (inflator No.1) connector terminal 3A and 3B, and driver-side air bag module (inflator No.2) connector terminal 4A and 4B. • Set resistance of **SST** (Fuel and thermometer checker) to 2 ohm. • Connect negative battery cable. • Turn ignition switch to ON position. • Check following PID/DATA monitor, using **SST** (WDS or equivalent). (See T–195 PID/DATA MONITOR TABLE) — OD_DAB2_ST • Is related wiring harness normal?	Yes	Replace driver-side air bag module. (See T–120 DRIVER-SIDE AIR BAG MODULE REMOVAL/INSTALLATION)
		No	Go to next step.
4	**INSPECT CLOCK SPRING** • Inspect clock spring. (See T–126 CLOCK SPRING INSPECTION) • Is clock spring normal?	Yes	Go to next step.
		No	Replace clock spring. (See T–125 CLOCK SPRING REMOVAL/INSTALLATION)
5	**INSPECT WIRING HARNESS BETWEEN CLOCK SPRING AND SAS UNIT** • Turn ignition switch to LOCK position. • Disconnect negative battery cable and wait for **more than 1 minute**. • Remove column cover. • Disconnect clock spring connector. • Remove glove compartment. • Disconnect passenger-side air bag module connector. • Disconnect driver and passenger-side side air bag module connectors. (Vehicle with side air bag) • Disconnect driver and passenger-side curtain air bag module connectors. (Vehicle with curtain air bag) • Remove B-pillar lower trim. (Vehicle with pre-tensioner seat belt) • Disconnect driver and passenger-side pre-tensioner seat belt connectors. (Vehicle with pre-tensioner seat belt) • Turn up floor covering. • Disconnect all SAS unit connectors. • Inspect following wiring harnesses between SAS unit and clock spring terminals for short to ground, short to power supply, and open circuit: — 1G—1B — 1J—1A • Is wiring harness okay?	Yes	**Present malfunction diagnosis:** • Replace SAS unit. (See T–124 SAS UNIT REMOVAL/INSTALLATION) **Past malfunction diagnosis:** • Troubleshooting completed.
		No	Replace wiring harnesses.

DTC B2229, B2231, B2233, B2235

A6E817401046W18

DTC	B2229	Passenger-side air bag module (inflator No.2) system circuit short to ground
	B2231	Passenger-side air bag module (inflator No.2) system circuit short to power supply
	B2233	Passenger-side air bag module (inflator No.2) system resistance high
	B2235	Passenger-side air bag module (inflator No.2) system resistance low
DETECTION CONDITION		**Warning** • **Detection conditions are for understanding DTC outline before performing inspection. Performing inspection with only detection conditions may cause injury due to operating error or damage the system. When performing inspection, always follow inspection procedure.** • Abnormal resistance (other than **1.4—2.9 ohm**) detected in passenger-side air bag module circuit • Malfunction in wiring harness between passenger-side air bag module (inflator No.2) and SAS unit
POSSIBLE CAUSE		• Open or short circuit in wiring harness between passenger-side air bag module (inflator No.2) and SAS unit • Passenger-side air bag module (inflator No.2) malfunction • SAS unit malfunction

PASSENGER-SIDE AIR BAG MODULE CONNECTOR

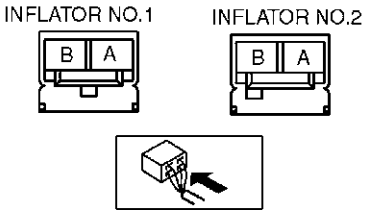

Diagnostic procedure

STEP	INSPECTION		ACTION
1	**INSPECT PASSENGER-SIDE AIR BAG MODULE (INFLATOR NO.2)** • Check following PID/DATA monitor, using **SST** (WDS or equivalent). (See T–195 PID/DATA MONITOR TABLE) — P_ABAGR2 • Is resistant value of passenger-side air bag module normal? — Resistance: **1.4—2.9 ohm**	Yes	**Present malfunction diagnosis:** • Replace SAS unit. (See T–124 SAS UNIT REMOVAL/INSTALLATION) **Past malfunction diagnosis:** • Troubleshooting completed.
		No	Go to next step.
2	**INSPECT PASSENGER-SIDE AIR BAG MODULE (INFLATOR NO.2) CONNECTOR** **Warning** • **Handling air bag system components improperly can accidentally deploy air bag modules and pre-tensioner seat belts, which may seriously injure you. Read AIR BAG SYSTEM SERVICE WARNINGS before handling air bag system components. (See T–117 SERVICE WARNINGS)** • Turn ignition switch to LOCK position. • Disconnect negative battery cable and wait for **more than 1 minute**. • Remove glove compartment. • Disconnect passenger-side air bag module connector. • Is there cracking or chipping in passenger-side air bag module connector?	Yes	Replace wiring harness.
		No	Go to next step.

T

STEP	INSPECTION		ACTION
3	**VERIFY WHETHER MALFUNCTION IS IN PASSENGER-SIDE AIR BAG MODULE (INFLATOR NO.2) OR RELATED WIRING HARNESS** • Connect leads of **SST** (Fuel and thermometer checker) or apply 2 ohm resistor to passenger-side air bag module (inflator No.1) connector terminal A and B, and passenger-side air bag module (inflator No.2) connector terminal A and B. • Set resistance of **SST** (Fuel and thermometer checker) to 2 ohm. • Connect negative battery cable. • Turn ignition switch to ON position. • Check following PID/DATA monitor, using **SST** (WDS or equivalent). (See T–195 PID/DATA MONITOR TABLE) — DO_PAB2ST • Is related wiring harness normal?	Yes	Replace passenger-side air bag module. (See T–121 PASSENGER-SIDE AIR BAG MODULE REMOVAL/INSTALLATION)
		No	Replace wiring harness, then go to next step.
4	**INSPECT SAS UNIT** • Turn ignition switch to LOCK position. • Disconnect negative battery cable and wait for **more than 1 minute**. • Connect passenger-side air bag module connector. • Are DTCs B2229, B2231, B2233 and/or B2235 indicated?	Yes	**Present malfunction diagnosis:** • Replace SAS unit. (See T–124 SAS UNIT REMOVAL/INSTALLATION) **Past malfunction diagnosis:** • Troubleshooting completed.
		No	Troubleshooting completed.

DTC B2296

A6E817401046W19

DTC B2296	Crash zone sensor system (communication error, sensor internal circuit abnormal)
DETECTION CONDITION	**Warning** • **Detection conditions are for understanding DTC outline before performing inspection. Performing inspection with only detection conditions may cause injury due to operating error or damage the system. When performing inspection, always follow inspection procedure.** • Malfunction in wiring harness between crash zone sensor and SAS unit • Malfunction in crash zone sensor circuit
POSSIBLE CAUSE	• Open or short circuit in wiring harness between crash zone sensor and SAS unit • SAS unit malfunction • Crash zone sensor malfunction

SAS UNIT CONNECTOR

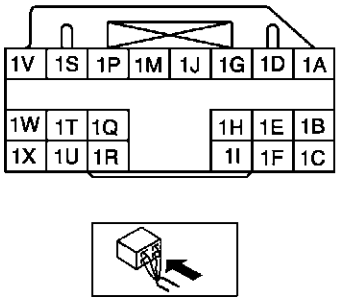

CRASH ZONE SENSOR CONNECTOR

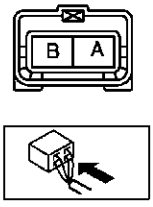

Diagnostic procedure

STEP	INSPECTION		ACTION
1	**INSPECT CRASH ZONE SENSOR** • Check following PID/DATA monitor, using **SST** (WDS or equivalent). (See T–195 PID/DATA MONITOR TABLE) — OD_F_CRSH • Is crash zone sensor normal?	Yes	**Present malfunction diagnosis:** • Replace SAS unit. (See T–124 SAS UNIT REMOVAL/INSTALLATION) **Past malfunction diagnosis:** • Troubleshooting completed.
		No	Go to next step.
2	**INSPECT WIRING HARNESS BETWEEN CRASH ZONE SENSOR AND SAS UNIT** **Warning** • **Handling air bag system components improperly can accidentally deploy air bag modules and pre-tensioner seat belts, which may seriously injure you. Read AIR BAG SYSTEM SERVICE WARNINGS before handling air bag system components. (See T–117 SERVICE WARNINGS)** • Turn ignition switch to LOCK position. • Disconnect negative battery cable and wait for **more than 1 minute**. • Remove column cover. • Disconnect clock spring connector. • Remove glove compartment. • Disconnect passenger-side air bag module connector. • Disconnect driver and passenger-side side air bag module connectors. (Vehicle with side air bag) • Disconnect driver and passenger-side curtain air bag module connectors. (Vehicle with curtain air bag) • Remove B-pillar lower trim. (Vehicle with pre-tensioner seat belt) • Disconnect driver and passenger-side pre-tensioner seat belt connectors. (Vehicle with pre-tensioner seat belt) • Turn up floor covering. • Disconnect all SAS unit connectors. • Disconnect crash zone sensor connector. • Connect negative battery cable. • Inspect following wiring harnesses between SAS unit and crash zone sensor terminals for short to ground, short to power supply, and open circuit: — 1B—A — 1C—B • Is wiring harness okay?	Yes	Replace crash zone sensor, then go to next step. (See T–123 CRASH ZONE SENSOR REMOVAL/INSTALLATION)
		No	Replace wiring harnesses.
3	**INSPECT SAS UNIT** • Turn ignition switch to LOCK position. • Disconnect negative battery cable and wait for **more than 1 minute**. • Connect all SAS unit connectors. • Connect crash zone sensor connector. • Is DTC B2296 indicated?	Yes	**Present malfunction diagnosis:** • Replace SAS unit. (See T–124 SAS UNIT REMOVAL/INSTALLATION) **Past malfunction diagnosis:** • Troubleshooting completed.
		No	Troubleshooting completed.

T

DTC B2444, U2017

A6E817401046W20

DTC	B2444	**Driver-side side air bag sensor system (sensor internal circuit abnormal)**
	U2017	**Driver-side side air bag sensor system (communication error)**
DETECTION CONDITION		**Warning** • **Detection conditions are for understanding DTC outline before performing inspection. Performing inspection with only detection conditions may cause injury due to operating error or damage the system. When performing inspection, always follow inspection procedure.** • Malfunction in wiring harness between driver-side side air bag sensor and SAS unit • Malfunction in driver-side side air bag sensor circuit
POSSIBLE CAUSE		• Open or short circuit in wiring harness between driver-side side air bag sensor and SAS unit • Driver-side side air bag sensor malfunction • SAS unit malfunction

SAS UNIT CONNECTOR

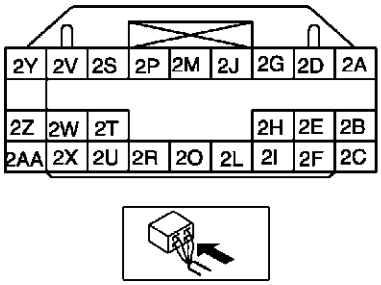

DRIVER-SIDE SIDE AIR BAG SENSOR CONNECTOR

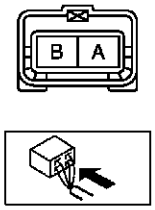

Diagnostic procedure

STEP	INSPECTION		ACTION
1	**INSPECT DRIVER-SIDE SIDE AIR BAG SENSOR** • Check following PID/DATA monitor, using **SST** (WDS or equivalent). (See T–195 PID/DATA MONITOR TABLE) — OD_D_CRSH • Is driver-side side air bag sensor normal?	Yes	**Present malfunction diagnosis:** • Replace SAS unit. (See T–124 SAS UNIT REMOVAL/INSTALLATION) **Past malfunction diagnosis:** • Troubleshooting completed.
		No	Go to next step.

STEP	INSPECTION		ACTION
2	**INSPECT WIRING HARNESS BETWEEN DRIVER-SIDE SIDE AIR BAG SENSOR AND SAS UNIT** **Warning** • **Handling air bag system components improperly can accidentally deploy air bag modules and pre-tensioner seat belts, which may seriously injure you. Read AIR BAG SYSTEM SERVICE WARNINGS before handling air bag system components. (See T–117 SERVICE WARNINGS)** • Turn ignition switch to LOCK position. • Disconnect negative battery cable and wait for **more than 1 minute**. • Remove column cover. • Disconnect clock spring connector. • Remove glove compartment. • Disconnect passenger-side air bag module connector. • Disconnect driver and passenger-side side air bag module connectors. (Vehicle with side air bag) • Disconnect driver and passenger-side curtain air bag module connectors. (Vehicle with curtain air bag) • Remove B-pillar lower trim. • Disconnect driver and passenger-side pre-tensioner seat belt connectors. (Vehicle with pre-tensioner seat belt) • Turn up floor covering. • Disconnect all SAS unit connectors. • Disconnect driver-side side air bag sensor connector. • Connect negative battery cable. • Inspect following wiring harnesses between SAS unit and driver-side side air bag sensor terminals for short to ground, short to power supply, and open circuit: — 2Z—A — 2AA—B • Is wiring harness okay?	Yes	Replace driver-side side air bag sensor, then go to next step. (See T–123 SIDE AIR BAG SENSOR REMOVAL/INSTALLATION)
		No	Replace wiring harnesses.
3	**INSPECT SAS UNIT** • Turn ignition switch to LOCK position. • Disconnect negative battery cable and wait for **more than 1 minute**. • Connect all SAS unit connectors. • Connect driver-side side air bag sensor connector. • Are DTCs B2444 and/or U2017 indicated?	Yes	**Present malfunction diagnosis:** • Replace SAS unit. (See T–124 SAS UNIT REMOVAL/INSTALLATION) **Past malfunction diagnosis:** • Troubleshooting completed.
		No	Troubleshooting completed.

T

DTC B2445, U2018

A6E817401046W21

DTC	B2445	**Passenger-side side air bag sensor system (sensor internal circuit abnormal)**
	U2018	**Passenger-side side air bag sensor system (communication error)**
DETECTION CONDITION		**Warning** • **Detection conditions are for understanding DTC outline before performing inspection. Performing inspection with only detection conditions may cause injury due to operating error or damage the system. When performing inspection, always follow inspection procedure.** • Malfunction in wiring harness between passenger-side side air bag sensor and SAS unit • Malfunction in passenger-side side air bag sensor circuit
POSSIBLE CAUSE		• Open or short circuit in wiring harness between passenger-side side air bag sensor and SAS unit • Passenger-side side air bag sensor malfunction • SAS unit malfunction

SAS UNIT CONNECTOR

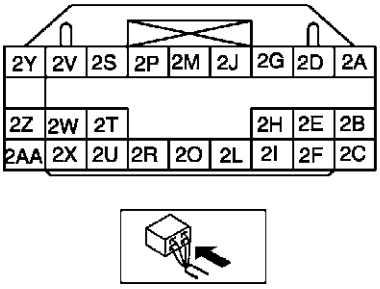

PASSENGER-SIDE SIDE AIR BAG SENSOR CONNECTOR



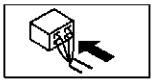

Diagnostic procedure

STEP	INSPECTION		ACTION
1	**INSPECT PASSENGER-SIDE SIDE AIR BAG SENSOR** • Check following PID/DATA monitor, using **SST** (WDS or equivalent). (See T–195 PID/DATA MONITOR TABLE) — OD_P_CRSH • Is passenger-side side air bag sensor normal?	Yes	**Present malfunction diagnosis:** • Replace SAS unit. (See T–124 SAS UNIT REMOVAL/INSTALLATION) **Past malfunction diagnosis:** • Troubleshooting completed.
		No	Go to next step.

STEP	INSPECTION		ACTION
2	**INSPECT WIRING HARNESS BETWEEN PASSENGER-SIDE AIR BAG SENSOR AND SAS UNIT** **Warning** • **Handling air bag system components improperly can accidentally deploy air bag modules and pre-tensioner seat belts, which may seriously injure you. Read AIR BAG SYSTEM SERVICE WARNINGS before handling air bag system components. (See T–117 SERVICE WARNINGS)** • Turn ignition switch to LOCK position. • Disconnect negative battery cable and wait for **more than 1 minute**. • Remove column cover. • Disconnect clock spring connector. • Remove glove compartment. • Disconnect passenger-side air bag module connector. • Disconnect driver and passenger-side side air bag module connectors. (Vehicle with side air bag) • Disconnect driver and passenger-side curtain air bag module connectors. (Vehicle with curtain air bag) • Remove B-pillar lower trim. • Disconnect driver and passenger-side pre-tensioner seat belt connectors. (Vehicle with pre-tensioner seat belt) • Turn up floor covering. • Disconnect all SAS unit connectors. • Disconnect passenger-side side air bag sensor connector. • Connect negative battery cable. • Inspect following wiring harnesses between SAS unit and passenger-side side air bag sensor terminals for short to ground, short to power supply, and open circuit: — 2B—A — 2C—B • Is wiring harness okay?	Yes	Replace passenger-side side air bag sensor, then go to next step. (See T–123 SIDE AIR BAG SENSOR REMOVAL/INSTALLATION)
		No	Replace wiring harnesses.
3	**INSPECT SAS UNIT** • Turn ignition switch to LOCK position. • Disconnect negative battery cable and wait for **more than 1 minute**. • Connect all SAS unit connectors. • Connect passenger-side side air bag sensor connector. • Are DTCs B2445 and/or U2018 indicated?	Yes	**Present malfunction diagnosis:** • Replace SAS unit. (See T–124 SAS UNIT REMOVAL/INSTALLATION) **Past malfunction diagnosis:** • Troubleshooting completed.
		No	Troubleshooting completed.

T

DTC B2477

A6E817401046W22

DTC B2477	SAS unit configuration error
DETECTION CONDITION	**Warning** • **Detection conditions are for understanding DTC outline before performing inspection. Performing inspection with only detection conditions may cause injury due to operating error or damage the system. When performing inspection, always follow inspection procedure.** • SAS unit configuration not set correctly
POSSIBLE CAUSE	• SAS unit configuration error • SAS unit malfunction

Diagnostic procedure

INSPECTION		ACTION
CONFIGRATION • Configurate SAS unit, using **SST** (WDS or equivalent). • Is DTC B2477 indicated?	Yes	**[Present malfunction diagnosis]** Replace SAS unit. (See T–124 SAS UNIT REMOVAL/INSTALLATION) **[Past malfunction diagnosis]** Troubleshooting completed.
	No	Troubleshooting completed.

DTC B2773, B2774, B2775, B2776

A6E817401046W23

DTC		
	B2773	**Driver-side curtain air bag module system resistance low**
	B2774	**Driver-side curtain air bag module system resistance high**
	B2775	**Driver-side curtain air bag module system circuit short to ground**
	B2776	**Driver-side curtain air bag module system circuit short to power supply**
DETECTION CONDITION		**Warning** • **Detection conditions are for understanding DTC outline before performing inspection. Performing inspection with only detection conditions may cause injury due to operating error or damage the system. When performing inspection, always follow inspection procedure.** • Abnormal resistance (other than **1.4—3.2 ohm**) detected in driver-side curtain air bag module circuit • Malfunction in wiring harness between driver-side curtain air bag module and SAS unit
POSSIBLE CAUSE		• Open or short circuit in wiring harness between driver-side curtain air bag module and SAS unit • Driver-side curtain air bag module malfunction • SAS unit malfunction

DRIVER-SIDE CURTAIN AIR BAG MODULE CONNECTOR

L.H.D. AND R.H.D. 5HB

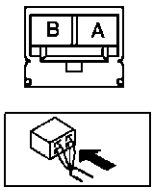

R.H.D. 4SD



Diagnostic procedure

STEP	INSPECTION		ACTION
1	**INSPECT DRIVER-SIDE CURTAIN AIR BAG MODULE** • Check following PID/DATA monitor, using **SST** (WDS or equivalent). (See T–195 PID/DATA MONITOR TABLE) — DR_CURTN • Is resistant value of driver-side curtain air bag module normal? — Resistance: **1.4—3.2 ohm**	Yes	**Present malfunction diagnosis:** • Replace SAS unit. (See T–124 SAS UNIT REMOVAL/INSTALLATION) **Past malfunction diagnosis:** • Troubleshooting completed.
		No	Go to next step.

STEP	INSPECTION		ACTION
2	**INSPECT DRIVER-SIDE CURTAIN AIR BAG MODULE CONNECTOR** **Warning** • **Handling air bag system components improperly can accidentally deploy air bag modules and pre-tensioner seat belts, which may seriously injure you. Read AIR BAG SYSTEM SERVICE WARNINGS before handling air bag system components. (See T–117 SERVICE WARNINGS)** • Turn ignition switch to LOCK position. • Disconnect negative battery cable and wait for **more than 1 minute**. • Disconnect driver-side curtain air bag module connector. • Is there cracking or chipping in driver-side curtain air bag module connector?	Yes	Replace wiring harness.
		No	Go to next step.
3	**VERIFY WHETHER MALFUNCTION IS IN DRIVER-SIDE CURTAIN AIR BAG MODULE OR RELATED WIRING HARNESS** • Connect leads of **SST** (Fuel and thermometer checker) or apply 2 ohm resistor to driver-side curtain air bag module connector terminal A and B. • Set resistance of **SST** (Fuel and thermometer checker) to 2 ohm. • Connect negative battery cable. • Turn ignition switch to ON position. • Check following PID/DATA monitor, using **SST** (WDS or equivalent). (See T–195 PID/DATA MONITOR TABLE) — DO_D_CURT • Is related wiring harness normal?	Yes	Replace driver-side curtain air bag module. (See T–122 CURTAIN AIR BAG MODULE REMOVAL/INSTALLATION)
		No	Replace wiring harness, then go to next step.
4	**INSPECT SAS UNIT** • Turn ignition switch to LOCK position. • Disconnect negative battery cable and wait for **more than 1 minute**. • Connect driver-side curtain air bag module connector. • Are DTCs B2773, B2774, B2775 and/or B2776 indicated?	Yes	**Present malfunction diagnosis:** • Replace SAS unit. (See T–124 SAS UNIT REMOVAL/INSTALLATION) **Past malfunction diagnosis:** • Troubleshooting completed.
		No	Troubleshooting completed.

T

DTC B2777, B2778, B2779, B2780

A6E817401046W24

DTC	B2777	Passenger-side curtain air bag module system resistance low
	B2778	Passenger-side curtain air bag module system resistance high
	B2779	Passenger-side curtain air bag module system circuit short to ground
	B2780	Passenger-side curtain air bag module system circuit short to power supply
DETECTION CONDITION		**Warning** • **Detection conditions are for understanding DTC outline before performing inspection. Performing inspection with only detection conditions may cause injury due to operating error or damage the system. When performing inspection, always follow inspection procedure.** • Abnormal resistance (other than **1.4—3.2 ohm**) detected in passenger-side curtain air bag module circuit • Malfunction in wiring harness between passenger-side curtain air bag module and SAS unit
POSSIBLE CAUSE		• Open or short circuit in wiring harness between passenger-side curtain air bag module and SAS unit • Passenger-side curtain air bag module malfunction • SAS unit malfunction

PASSENGER-SIDE CURTAIN AIR BAG MODULE CONNECTOR

L.H.D. 5HB AND R.H.D.

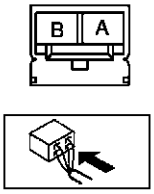

L.H.D. 4SD

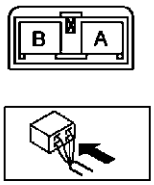

Diagnostic procedure

STEP	INSPECTION		ACTION
1	**INSPECT PASSENGER-SIDE CURTAIN AIR BAG MODULE** • Check following PID/DATA monitor, using **SST** (WDS or equivalent). (See T–195 PID/DATA MONITOR TABLE) — PC_CURTN • Is resistant value of passenger-side curtain air bag module normal? — Resistance: **1.4—3.2 ohm**	Yes	**Present malfunction diagnosis:** • Replace SAS unit. (See T–124 SAS UNIT REMOVAL/INSTALLATION) **Past malfunction diagnosis:** • Troubleshooting completed.
		No	Go to next step.
2	**INSPECT PASSENGER-SIDE CURTAIN AIR BAG MODULE CONNECTOR** **Warning** • **Handling air bag system components improperly can accidentally deploy air bag modules and pre-tensioner seat belts, which may seriously injure you. Read AIR BAG SYSTEM SERVICE WARNINGS before handling air bag system components. (See T–117 SERVICE WARNINGS)** • Turn ignition switch to LOCK position. • Disconnect negative battery cable and wait for **more than 1 minute**. • Disconnect passenger-side curtain air bag module connector. • Is there cracking or chipping in passenger-side curtain air bag module connector?	Yes	Replace wiring harness.
		No	Go to next step.

STEP	INSPECTION		ACTION
3	**VERIFY WHETHER MALFUNCTION IS IN PASSENGER-SIDE CURTAIN AIR BAG MODULE OR RELATED WIRING HARNESS** • Connect leads of **SST** (Fuel and thermometer checker) or apply 2 ohm resistor to passenger-side curtain air bag module connector terminal A and B. • Set resistance of **SST** (Fuel and thermometer checker) to 2 ohm. • Connect negative battery cable. • Turn ignition switch to ON position. • Check following PID/DATA monitor, using **SST** (WDS or equivalent). (See T–195 PID/DATA MONITOR TABLE) — DO_P_CURT • Is related wiring harness normal?	Yes	Replace passenger-side curtain air bag module. (See T–122 CURTAIN AIR BAG MODULE REMOVAL/INSTALLATION)
		No	Replace wiring harness, then go to next step.
4	**INSPECT SAS UNIT** • Turn ignition switch to LOCK position. • Disconnect negative battery cable and wait for **more than 1 minute**. • Connect passenger-side curtain air bag module connector. • Are DTCs B2777, B2778, B2779 and/or B2780 indicated?	Yes	**Present malfunction diagnosis:** • Replace SAS unit. (See T–124 SAS UNIT REMOVAL/INSTALLATION) **Past malfunction diagnosis:** • Troubleshooting completed.
		No	Troubleshooting completed.

DTC B2867

A6E817401046W25

DTC B2867	SAS unit connector poor connection
DETECTION CONDITION	**Warning** • **Detection conditions are for understanding DTC outline before performing inspection. Performing inspection with only detection conditions may cause injury due to operating error or damage the system. When performing inspection, always follow inspection procedure.** • There is no continuity between poor connection detector bar terminals of SAS unit.
POSSIBLE CAUSE	• Poor connection of any SAS unit connectors • Malfunction of any SAS unit connectors • SAS unit malfunction

SAS UNIT CONNECTOR

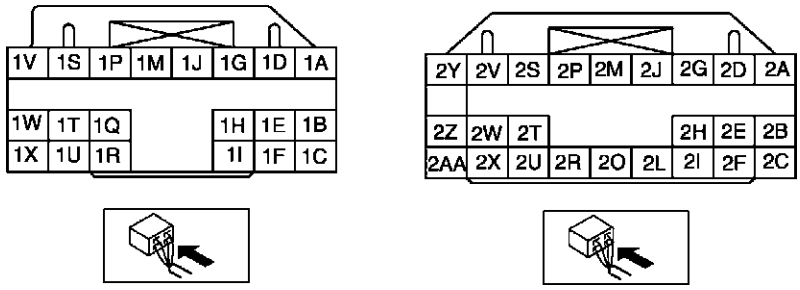

T

Diagnostic procedure

STEP	INSPECTION		ACTION
1	**VERIFY THAT ALL SAS UNIT CONNECTORS ARE CONNECTED WITH SAS UNIT** **Warning** • **Handling air bag system components improperly can accidentally deploy air bag modules and pre-tensioner seat belts, which may seriously injure you. Read AIR BAG SYSTEM SERVICE WARNINGS before handling air bag system components.** **(See T–117 SERVICE WARNINGS)** • Turn ignition switch to LOCK position. • Disconnect negative battery cable and wait for **more than 1 minute**. • Turn up floor covering. • Are all SAS unit connectors securely connected?	Yes	Go to next step.
		No	Reconnect connector properly.
2	**INSPECT ALL SAS UNIT CONNECTORS** • Remove column cover. • Disconnect clock spring connector. • Remove glove compartment. • Disconnect passenger-side air bag module connector. • Disconnect driver and passenger-side side air bag module connectors. (Vehicles with side air bag) • Disconnect driver and passenger-side curtain air bag module connectors. (Vehicles with curtain air bag) • Remove B-pillar lower trims. (Vehicle with pre-tensioner seat belt) • Disconnect driver and passenger-side pre-tensioner seat belt connectors. (Vehicle with pre-tensioner seat belt) • Disconnect all SAS unit connectors. • Are poor connection detector bars of all SAS unit connectors okay?	Yes	**Present malfunction diagnosis:** • Replace SAS unit. (See T–124 SAS UNIT REMOVAL/INSTALLATION) **Past malfunction diagnosis:** • Troubleshooting completed.
		No	Replace wiring harnesses.

TROUBLESHOOTING

CAR-NAVIGATION SYSTEM

A6E818066000W01

Troubleshooting Index

- Use the chart below verify the trouble in order to diagnose the appropriate area.

No.	Malfunction symptom
1	While vehicle is in reverse, vehicle locator mark goes forward.
2	In navigation mode, vehicle locator mark skips.
3	Even when headlight switch is turned on, daytime screen does not change to night time screen. (Front and rear combination lights operate normally.)

NO.1 WHILE VEHICLE IS IN REVERSE, VEHICLE LOCATOR MARK GOES FORWARD.

A6E818066000W02

- When performing an asterisked (*) troubleshooting inspection, shake the wiring harness and connectors while doing the inspection to discover whether poor contact points are the cause of any intermittent malfunction. If there is a problem, check to make sure connectors, terminals and wiring harness are connected correctly and undamaged.

1	While vehicle is in reverse, vehicle locator mark goes forward.

TROUBLESHOOTING HINTS

- Malfunction in shift position (R range (ATX) or revese position (MTX)) signal line of car-navigation unit.
  - — Car-navigation unit malfunction
  - — Malfunction in wiring harness between car-navigation unit and transaxle range switch
  - — Transaxle range switch malfunction

Diagnostic procedure

STEP	INSPECTION		ACTION
1	• While the vehicle is in reverse, are back-up lights illuminated?	Yes	Go to next step.
		No	Repair back-up light circuit, then go to next step.
2*	• Disconnect car-navigation unit connector (16-pin). • Turn ignition switch to ON position. • Shift selector lever to R range (ATX) or revese position (MTX). • Measure voltage at the following terminal of car-navigation unit connector (16-pin, harness side): — Terminal 2L (Shift position (R range (ATX) or revese position (MTX)) signal) • Is voltage **9 V or more**?	Yes	Replace car-navigation unit (available at Clarion service center) or get it repaired at Panasonic Service center, then go to next step.
		No	**ATX** • Inspect wiring harness between car-navigation unit (16-pin, terminal 2L) and transaxle range switch, then go to next step. **MTX** • Inspect wiring harness between car-navigation unit (16-pin, terminal 2L) and back-up light switch, then go to next step.
3	• Does vehicle locator mark indicate actual position of vehicle?	Yes	Complete troubleshooting, then explain repairs to customer.
		No	Recheck malfunction symptoms, then repeat from Step 1 if malfunction recurs.

NO.2 IN NAVIGATION MODE, VEHICLE LOCATOR MARK SKIPS.

A6E818066000W03

2	In navigation mode, vehicle locator mark skips.

TROUBLESHOOTING HINTS

- Malfunction in vehicle speed signal line of car-navigation unit.
  - — Car-navigation unit malfunction
  - — ABS (ABS/TCS) HU/CM malfunction (with ABS (ABS/TCS))
  - — DSC HU/CM malfunction (with DSC)
  - — Malfunction in wiring harness between car-navigation unit and instrument cluster

T

Diagnostic procedure

STEP	INSPECTION		ACTION
1	• Disconnect car-navigation unit connector (16-pin). • Jack up vehicle and run engine at low speed. • Measure voltage at the following terminal of car-navigation unit connector (16-pin): — Terminal 2H (Vehicle speed signal) • Is voltage **approx. 2.5 V** (reference)? **Note** • Vehicle speed signal is in electrical pulses of **approx. 0 V to 5 V**.	Yes	Replace car-navigation unit (available at Clarion service center) or get it repaired at Panasonic service center, then go to Step 4.
		No	Go to next step.
2*	• Disconnect ABS (ABS/TCS) HU/CM connector (28-pin) or DSC HU/CM connector (34-pin). • Is there continuity between car-navigation unit connector (16-pin) terminal 2H and ABS (ABS/TCS) HU/CM connector (28-pin) terminal V, or car-navigation unit connector (16-pin) terminal 2H and DSC HU/CM connector (34-pin) terminal AE?	Yes	Go to next step.
		No	Repair wiring harness between car-navigation unit and ABS (ABS/TCS) HU/CM, or car-navigation unit and DSC HU/CM, then go to Step 4.
3	• Inspect wiring harness between car-navigation unit connector (16-pin) terminal 2H and and ABS (ABS/TCS) HU/CM connector (28-pin) terminal V, or car-navigation unit connector (16-pin) terminal 2H and DSC HU/CM connector (34-pin) terminal AE for short to ground. • Is there short to ground?	Yes	Repair wiring harness between car-navigation unit and ABS (ABS/TCS) HU/CM, or car-navigation unit and DSC HU/CM, then go to next step.
		No	Replace instrument cluster, then go to next step.
4	• Does vehicle locator mark operate normally?	Yes	Complete troubleshooting, then explain repairs to customer.
		No	Recheck malfunction symptoms, then repeat from Step 1 if malfunction recurs.

NO.3 EVEN WHEN HEADLIGHT SWITCH IS TURNED ON, DAYTIME SCREEN DOES NOT CHANGE TO NIGHT TIME SCREEN. (FRONT AND REAR COMBINATION LIGHTS OPERATE NORMALLY.)

A6E818066000W04

3	**Even when headlight switch is turned on, daytime screen does not change to night time screen. (Front and rear combination lights operate normally.)**

TROUBLESHOOTING HINTS
- Malfunction in TNS (+) signal line of LCD unit
  — LCD unit malfunction
  — Malfunction in wiring harness between LCD unit and TNS relay

Diagnostic procedure

STEP	INSPECTION		ACTION
1*	• Turn headlight switch on. • Measure voltage at the following terminal of LCD unit connector (24-pin): — Terminal 1V (TNS (+) signal) • Is voltage **10 V or more**?	Yes	Replace LCD unit (available at Panasonic service center) or get it repaired at Panasonic service center, then go to next step.
		No	Repair wiring harness between LCD unit and TNS relay, then go to next step.
2	• When headlight switch is turned on, does daytime screen change to night time screen?	Yes	Complete troubleshooting, then explain repairs to customer.
		No	Recheck malfunction symptoms, then repeat from Step 1 if malfunction recurs.

AIR BAG SYSTEM

A6E818001046W01

Troubleshooting Index

- Use the chart below verify the symptoms of the trouble in order to diagnose the appropriate area.

No.	Troubleshooting item	Description	Page
1	Air bag system warning light does not illuminate.	Malfunction in air bag system warning circuit (short to ground).	(See T–231 NO.1 AIR BAG SYSTEM WARNING LIGHT DOES NOT ILLUMINATE)

No.	Troubleshooting item	Description	Page
2	Air bag system warning light is illuminated all the time.	Malfunction in air bag system warning circuit (open circuit or short to power supply).	(See T–232 NO.2 AIR BAG SYSTEM WARNING LIGHT IS ILLUMINATED ALL THE TIME)
3	Passenger-side air bag cut-off indicator light does not illuminate.	Malfunction in passenger-side air bag cut-off indicator light circuit (open circuit or short to power supply).	(See T–235 NO.3 PASSENGER-SIDE AIR BAG CUT-OFF INDICATOR LIGHT DOES NOT ILLUMINATE)
4	Passenger-side air bag cut-off indicator light is illuminated all the time.	Malfunction in passenger-side air bag cut-off indicator light circuit (short to ground).	(See T–237 NO.4 PASSENGER-SIDE AIR BAG CUT-OFF INDICATOR LIGHT IS ILLUMINATED ALL THE TIME)

NO.1 AIR BAG SYSTEM WARNING LIGHT DOES NOT ILLUMINATE

A6E818001046W02

1	**Air bag system warning light does not illuminate.**
DETECTION CONDITION	Malfunction in air bag system warning light circuit (short to ground)
POSSIBLE CAUSE	• SAS unit malfunction • Instrument cluster (print plate) malfunction • Short to ground circuit in wiring harness between instrument cluster and SAS unit

Diagnostic Procedure

- When performing an asterisked (*) troubleshooting inspection, shake the wiring harness and connectors while doing the inspection to discover whether poor contact points are the cause of any intermittent malfunction. If there is a problem, check to make sure connectors, terminals and wiring harness are connected correctly and undamaged.

STEP	INSPECTION		ACTION
1	**INSPECT OTHER WARNING AND INDICATOR LIGHTS CIRCUIT IN INSTRUMENT CLUSTER** • Turn ignition switch to ON position. • Do other warning and indicator lights illuminate?	Yes	Turn ignition switch to LOCK position, then go to next step.
		No	Inspect instrument cluster power supply system and ground system, then go to Step 5.
2	**INSPECT SAS UNIT** **Warning** • **Handling air bag system components improperly can accidentally deploy air bag modules and pre-tensioner seat belts, which may seriously injure you. Read AIR BAG SYSTEM SERVICE WARNINGS before handling air bag system components. (See T–117 SERVICE WARNINGS)** • Turn ignition switch to LOCK position. • Disconnect negative battery cable and wait for **more than 1 minute**. • Remove column cover. • Disconnect clock spring connector. • Remove glove compartment. • Disconnect passenger-side air bag module connector. • Disconnect driver and passenger-side side air bag module connectors. (Vehicles with side air bag) • Disconnect driver and passenger-side curtain air bag module connectors. (Vehicles with curtain air bag) • Remove B-pillar lower trims. (Vehicle with pre-tensioner seat belt) • Disconnect driver- and passenger-side pre-tensioner seat belt connectors. (Vehicle with pre-tensioner seat belt) • Turn up floor covering. • Disconnect all SAS unit connectors. • Connect negative battery cable. • Turn ignition switch to ON position. • Do air bag system warning light illuminate?	Yes	Replace SAS unit, then go to Step 5. (See T–124 SAS UNIT REMOVAL/INSTALLATION)
		No	Go to next step.

T

STEP	INSPECTION		ACTION
*3	**INSPECT WIRING HARNESS BETWEEN SAS UNIT AND INSTRUMENT CLUSTER FOR SHORT TO GROUND** • Turn ignition switch to LOCK position. • Disconnect negative battery cable. • Disconnect instrument cluster connector. • Is there continuity between terminal 1O of instrument cluster connector and ground?	Yes	Replace wiring harness, then go to Step 5.
		No	Go to next step.
4	**INSPECT INSTRUMENT CLUSTER** • Connect instrument cluster connector. • Connect instrument cluster connector terminal 1O to ground, then reconnect connector. • Connect negative battery cable. • Does air bag system warning light illuminate with ignition switch ON?	Yes	Replace instrument cluster, then go to next step. (See T–72 INSTRUMENT CLUSTER REMOVAL/ INSTALLATION)
		No	Go to next step.
5	**CONFIRM THAT MALFUNCTION SYMPTOMS DO NOT RECUR AFTER REPAIR** • Turn ignition switch to LOCK position. • Disconnect negative battery cable and wait for **more than 1 minute**. • Connect all SAS unit connectors. • Connect driver and passenger-side pre-tensioner seat belt connectors. (Vehicles with pre-tensioner seat belt) • Connect driver and passenger-side curtain air bag module connectors. (Vehicles with curtain air bag) • Connect driver and passenger-side side air bag module connectors. (Vehicles with side air bag) • Connect passenger-side air bag module connector. • Connect clock spring connector. • Connect negative battery cable. • Turn ignition switch to ON position. • Does air bag system warning light operate properly?	Yes	Complete troubleshooting, then explain repairs to customer.
		No	Recheck malfunction symptoms, then repeat from Step 1 if malfunction recurs.

NO.2 AIR BAG SYSTEM WARNING LIGHT IS ILLUMINATED ALL THE TIME

A6E818001046W03

2	**Air bag system warning light is illuminated all the time.**
DETECTION CONDITION	Malfunction in air bag system warning light circuit (open circuit or short to power supply).
POSSIBLE CAUSE	• Weak battery • SAS unit malfunction • Instrument cluster (print plate) malfunction • No connection in SAS unit connector • Poor contact in instrument cluster connector (16-pin) • Open or short to power supply circuit in wiring harness between instrument cluster and SAS unit • Poor contact at terminals 1T, 1X and/or 1W of SAS unit connector • Poor contact in wiring harness between terminal 1X of SAS unit connector and ground • Poor contact in wiring harness between AIR BAG 15 A fuse and terminal 1W of SAS unit

Diagnostic Procedure

- When performing an asterisked (*) troubleshooting inspection, shake the wiring harness and connectors while doing the inspection to discover whether poor contact points are the cause of any intermittent malfunction. If there is a problem, check to make sure connectors, terminals and wiring harness are connected correctly and undamaged.

STEP	INSPECTION		ACTION
1	**INSPECT BATTERY** • Measure voltage of battery. • Is voltage **more than 9 V**?	Yes	Go to next step.
		No	Battery is weak. Inspect charge/discharge system, then go to Step 10. (See G–4 BATTERY INSPECTION)

STEP	INSPECTION		ACTION
2	**VERIFY THAT SAS unit CONNECTOR IS CONNECTED** **Warning** • **Handling air bag system components improperly can accidentally deploy air bag modules and pre-tensioner seat belts, which may seriously injure you. Read AIR BAG SYSTEM SERVICE WARNINGS before handling air bag system components. (See T–117 SERVICE WARNINGS)** • Turn ignition switch to LOCK position. • Disconnect negative battery cable and wait for **more than 1 minute**. • Turn up floor covering. • Are all SAS unit connectors securely connected?	Yes	Go to next step.
		No	Reconnect connector properly, then go to Step 10.
* 3	**INSPECT WIRING HARNESS BETWEEN SAS UNIT AND INSTRUMENT CLUSTER FOR CONTINUITY** • Remove column cover. • Disconnect clock spring connector. • Remove glove compartment. • Disconnect passenger-side air bag module connector. • Disconnect driver and passenger-side side air bag module connectors. (Vehicles with side air bag) • Disconnect driver and passenger-side curtain air bag module connectors. (Vehicles with curtain air bag) • Remove B-pillar lower trims. (Vehicle with pre-tensioner seat belt) • Disconnect driver- and passenger-side pre-tensioner seat belt connectors. (Vehicle with pre-tensioner seat belt) • Turn up floor covering. • Disconnect all SAS unit connectors. • Disconnect instrument cluster connector. • Is there continuity between SAS unit connector terminal 1T and instrument cluster connector terminal 1O?	Yes	Go to next step.
		No	Replace wiring harness, then go to Step 10.
* 4	**INSPECT WIRING HARNESS BETWEEN SAS UNIT AND INSTRUMENT CLUSTER FOR SHORT TO POWER SUPPLY** • Connect negative battery cable. • Turn ignition switch to ON position. • Measure voltage at instrument cluster connector terminal 1O. • Is voltage **more than approximately 9 V**?	Yes	Replace wiring harness, then go to Step 10.
		No	Go to next step.
5	**CHECK TO SEE WHETHER MALFUNCTION IS IN AIR BAG SYSTEM WARNING LIGHT IN INSTRUMENT CLUSTER** • Connect instrument cluster connector terminal 1O to ground, then reconnect connector. • Does air bag system warning light illuminate with ignition switch ON?	Yes	Replace instrument cluster, then go to Step 9. (See T–72 INSTRUMENT CLUSTER REMOVAL/INSTALLATION)
		No	Go to next step.

STEP	INSPECTION		ACTION
6	**INSPECT POWER SUPPLY CIRCUIT OF SAS UNIT (TERMINAL 1W)** • Turn ignition switch to LOCK position. • Disconnect negative battery cable and wait for **more than 1 minute**. • Connect all SAS unit connectors. • Connect driver and passenger-side pre-tensioner seat belt connectors. (Vehicles with pre-tensioner seat belt) • Connect driver and passenger-side curtain air bag module connectors. (Vehicles with curtain air bag) • Connect driver and passenger-side side air bag module connectors. (Vehicles with side air bag) • Connect passenger-side air bag module connector. • Connect clock spring connector. • Inspect voltage for PID/DATA monitor RCM VOLT item using **SST** (WDS or equivalent). • Is voltage of at least either terminal **more than 9 V**?	Yes	Go to Step 9.
		No	Go to next step.
7	**INSPECT WIRING HARNESS BETWEEN BATTERY AND FUSE BLOCK** • Remove driver-side front side trim. • Remove fuse block without disconnecting connectors. • Turn ignition switch to ON position. • Measure voltage at terminals D (JB–01) of fuse block connector. • Is voltage of at least either terminal **more than 9 V**?	Yes	Go to next step.
		No	Repair wiring harnesses, then go to Step 10.
8	**INSPECT WIRING HARNESS BETWEEN FUSE BLOCK AND SAS UNIT** • Measure voltage at terminals G (JB–03) of fuse block connector. • Is voltage of at least either terminal **more than 9 V**?	Yes	Repair wiring harnesses, then go to Step 10.
		No	Inspect fuse block, then go to Step 10.
9	**VERIFY THAT SAS UNIT CONNECTOR TERMINAL 1X IS GROUND** • Turn ignition switch to LOCK position. • Disconnect negative battery cable and wait for **more than 1 minute**. • Remove column cover. • Disconnect clock spring connector. • Remove glove compartment. • Disconnect passenger-side air bag module connector. • Disconnect driver and passenger-side side air bag module connectors. (Vehicles with side air bag) • Disconnect driver and passenger-side curtain air bag module connectors. (Vehicles with curtain air bag) • Remove B-pillar lower trim. (Vehicle with pre-tensioner seat belt) • Disconnect driver and passenger-side pre-tensioner seat belt connectors. (Vehicle with pre-tensioner seat belt) • Turn up floor covering. • Disconnect all SAS unit connectors. • Inspect wiring harness between SAS unit connector terminal 1X and ground for following: — Short to power supply — Open circuit • Is wiring harness okay?	Yes	Replace SAS unit, then go to next step. (See T–124 SAS UNIT REMOVAL/INSTALLATION)
		No	Replace wiring harnesses, then go to next step.

STEP	INSPECTION		ACTION
10	**CONFIRM THAT MALFUNCTION SYMPTOMS DO NOT RECUR AFTER REPAIR** • Turn ignition switch to LOCK position. • Disconnect negative battery cable and wait for **more than 1 minute**. • Connect all SAS unit connectors. • Connect driver and passenger-side pre-tensioner seat belt connectors. (Vehicles with pre-tensioner seat belt) • Connect driver and passenger-side curtain air bag module connectors. (Vehicles with curtain air bag) • Connect driver and passenger-side side air bag module connectors. (Vehicles with side air bag) • Connect passenger-side air bag module connector. • Connect clock spring connector. • Connect instrument cluster connector. • Connect negative battery cable. • Turn ignition switch to ON position. • Does air bag system warning light operate properly?	Yes	Complete troubleshooting, then explain repairs to customer.
		No	Recheck malfunction symptoms, then repeat from Step 1 if malfunction recurs.

NO.3 PASSENGER-SIDE AIR BAG CUT-OFF INDICATOR LIGHT DOES NOT ILLUMINATE

A6E818001046W04

3	**Passenger-side air bag cut-off indicator light does not illuminate**
DETECTION CONDITION	Malfunction in passenger-side air bag cut-off indicator light circuit (open circuit or short to power supply)
POSSIBLE CAUSE	• SAS unit malfunction • Passenger-side air bag cut-off indicator light bulb malfunction • Open or short to power supply circuit in wiring harness between passenger-side air bag cut-off indicator light and SAS unit • Poor contact at terminals 1U 1X and/or 1W of SAS unit connector • Poor contact at terminals 1I of SAS unit connector • Poor contact in wiring harness between terminal 1X of SAS unit connector and ground • Poor contact or short circuits in wiring harness between METER IG 15 A fuse and SAS unit, between AIR BAG 15 A fuse and SAS unit at the time

Diagnostic Procedure

- When performing an asterisked (*) troubleshooting inspection, shake the wiring harness and connectors while doing the inspection to discover whether poor contact points are the cause of any intermittent malfunction. If there is a problem, check to make sure connectors, terminals and wiring harness are connected correctly and undamaged.

STEP	INSPECTION		ACTION
1	**INSPECT PASSENGER-SIDE AIR BAG CUT-OFF INDICATOR LIGHT BULB** • Disconnect negative battery cable. • Remove center panel module. (See T–96 CENTER PANEL MODULE REMOVAL/INSTALLATION) • Is passenger-side air bag cut-off indicator light bulb functional?	Yes	Reinstall it properly, then go to next step.
		No	Replace bulb, then go to Step 5.

STEP	INSPECTION		ACTION
*2	**INSPECT WIRING HARNESS BETWEEN PASSENGER-SIDE AIR BAG CUT-OFF INDICATOR LIGHT AND SAS UNIT FOR CONTINUITY** **Warning** • **Handling air bag system components improperly can accidentally deploy air bag modules and pre-tensioner seat belts, which may seriously injure you. Read SERVICE WARNINGS before handling air bag system components. (See T–117 SERVICE WARNINGS)** • Turn ignition switch to LOCK position. • Disconnect negative battery cable and wait for **more than 1 minute**. • Remove column cover. • Disconnect clock spring connector. • Remove glove compartment. • Disconnect passenger-side air bag module connector. • Disconnect driver and passenger-side side air bag module connectors. (Vehicles with side air bag) • Disconnect driver and passenger-side curtain air bag module connectors. (Vehicles with curtain air bag) • Remove B-pillar lower trims. (Vehicle with pre-tensioner seat belt) • Disconnect driver- and passenger-side pre-tensioner seat belt connectors. (Vehicle with pre-tensioner seat belt) • Turn up floor covering. • Disconnect all SAS unit connectors. • Is there continuity between terminal 1U of SAS unit connector and terminal A of passenger-side air bag cut-off indicator light?	Yes	Go to next step.
		No	Replace wiring harness, then go to Step 5.
*3	**INSPECT WIRING HARNESS BETWEEN PASSENGER-SIDE AIR BAG CUT-OFF INDICATOR LIGHT AND SAS UNIT FOR SHORT TO POWER SUPPLY** • Connect negative battery cable. • Turn ignition switch to ON position. • Measure voltage at terminal A of passenger-side air bag cut-off indicator light connector. • Is voltage **more than approximately 9 V**?	Yes	Replace wiring harness, then go to Step 5.
		No	Go to next step.
4	**CHECK TO SEE WHETHER MALFUNCTION IS IN PASSENGER-SIDE AIR BAG CUT-OFF INDICATOR LIGHT OR SAS UNIT** • Connect SAS unit connector terminal 1U to ground. • Does passenger-side air bag cut-off indicator light illuminate with ignition switch on?	Yes	Replace SAS unit, then go to next step. (See T–124 SAS UNIT REMOVAL/INSTALLATION)
		No	Go to next step.

STEP	INSPECTION		ACTION
5	**CONFIRM THAT MALFUNCTION SYMPTOMS DO NOT RECUR AFTER REPAIR** • Turn ignition switch to LOCK position. • Disconnect negative battery cable and wait for **more than 1 minute**. • Connect all SAS unit connectors. • Connect driver and passenger-side pre-tensioner seat belt connectors. (Vehicles with pre-tensioner seat belt) • Connect driver and passenger-side curtain air bag module connectors. (Vehicles with curtain air bag) • Connect driver and passenger-side side air bag module connectors. (Vehicles with side air bag) • Connect passenger-side air bag module connector. • Connect clock spring connector. • Connect negative battery cable. • Turn ignition switch to ON position. • Does passenger-side air bag cut-off indicator light operate properly?	Yes	Complete troubleshooting, then explain repairs to customer.
		No	Recheck malfunction symptoms, then repeat from Step 1 if malfunction recurs.

NO.4 PASSENGER-SIDE AIR BAG CUT-OFF INDICATOR LIGHT IS ILLUMINATED ALL THE TIME

A6E818001046W05

4	**Passenger-side air bag cut-off indicator light is illuminated all the time.**
DETECTION CONDITION	Malfunction in passenger-side air bag cut-off indicator light circuit (short to ground).
POSSIBLE CAUSE	• SAS unit malfunction • Short to ground circuit in wiring harness between passenger-side air bag cut-off indicator light and SAS unit

T

Diagnostic Procedure

- When performing an asterisked (*) troubleshooting inspection, shake the wiring harness and connectors while doing the inspection to discover whether poor contact points are the cause of any intermittent malfunction. If there is a problem, check to make sure connectors, terminals and wiring harness are connected correctly and undamaged.

STEP	INSPECTION		ACTION
*1	**INSPECT WIRING HARNESS BETWEEN PASSENGER-SIDE AIR BAG CUT-OFF INDICATOR LIGHT AND SAS UNIT FOR SHORT TO GROUND** • Remove center panel module. (See T–96 CENTER PANEL MODULE REMOVAL/INSTALLATION) • Remove column cover. • Disconnect clock spring connector. • Remove glove compartment. • Disconnect passenger-side air bag module connector. • Disconnect driver and passenger-side side air bag module connectors. (Vehicles with side air bag) • Disconnect driver and passenger-side curtain air bag module connectors. (Vehicles with curtain air bag) • Remove B-pillar lower trims. (Vehicle with pre-tensioner seat belt) • Disconnect driver- and passenger-side pre-tensioner seat belt connectors. (Vehicle with pre-tensioner seat belt) • Turn up floor covering. • Disconnect all SAS unit connectors. • Is there continuity between terminal 1U of SAS unit connector and ground?	Yes	Replace wiring harness, then go to next step.
		No	Replace SAS unit, then go to next step. (See T–124 SAS UNIT REMOVAL/INSTALLATION)

STEP	INSPECTION		ACTION
2	**CONFIRM THAT MALFUNCTION SYMPTOMS DO NOT RECUR AFTER REPAIR** • Connect all SAS unit connectors. • Connect driver and passenger-side pre-tensioner seat belt connectors. (Vehicles with pre-tensioner seat belt) • Connect driver and passenger-side curtain air bag module connectors. (Vehicles with curtain air bag) • Connect driver and passenger-side side air bag module connectors. (Vehicles with side air bag) • Connect passenger-side air bag module connector. • Connect clock spring connector. • Connect negative battery cable. • Turn ignition switch to ON position. • Does passenger-side air bag cut-off indicator light operate properly?	Yes	Complete troubleshooting, then explain repairs to customer.
		No	Recheck malfunction symptoms, then repeat from Step 1 if malfunction recurs.

HEATER AND AIR CONDITIONER SYSTEMS

LOCATION INDEX U-3
BASIC SYSTEM U-3
CONTROL SYSTEM U-4
SERVICE WARNINGS U-8
HANDLING REFRIGERANT U-8
STORING REFRIGERANT U-8
SERVICE CAUTIONS U-8
HANDLING INSUFFICIENT REFRIGERANT LEVEL U-8
HANDLING COMPRESSOR OIL U-8
REFRIGERANT SYSTEM SERVICE PROCEDURES U-9
GAS CHARGING SET INSTALLATION U-9
RECOVERY U-9
CHARGING U-9
REFRIGERANT PRESSURE CHECK U-12
REFRIGERANT SYSTEM PERFORMANCE TEST U-13
BASIC SYSTEM U-14
BLOWER UNIT REMOVAL/INSTALLATION U-14
BLOWER UNIT DISASSEMBLY/ASSEMBLY U-14
AIR FILTER REMOVAL/INSTALLATION U-15
AIR FILTER INSPECTION U-15
A/C UNIT REMOVAL/INSTALLATION U-15
A/C UNIT DISASSEMBLY/ASSEMBLY U-18
EXPANSION VALVE REMOVAL/INSTALLATION U-21
EVAPORATOR INSPECTION U-22
HEATER CORE INSPECTION U-23
REAR HEAT DUCT REMOVAL/INSTALLATION U-23
A/C COMPRESSOR REMOVAL/INSTALLATION U-23
CONDENSER REMOVAL/INSTALLATION U-24
CONDENSER INSPECTION U-24
REFRIGERANT LINES REMOVAL/INSTALLATION U-25
CONTROL SYSTEM U-30
AIR INTAKE ACTUATOR REMOVAL/INSTALLATION U-30
AIR INTAKE ACTUATOR INSPECTION U-30
AIR MIX ACTUATOR REMOVAL/INSTALLATION U-31
AIR MIX ACTUATOR INSPECTION U-32
AIRFLOW MODE ACTUATOR REMOVAL/INSTALLATION U-33
AIRFLOW MODE ACTUATOR INSPECTION U-34
BLOWER MOTOR REMOVAL/INSTALLATION U-35
BLOWER MOTOR INSPECTION U-35
RESISTOR REMOVAL/INSTALLATION U-35
RESISTOR INSPECTION U-36
POWER MOS FET REMOVAL/INSTALLATION U-36
POWER MOS FET INSPECTION U-36
MAGNETIC CLUTCH DISASSEMBLY/ASSEMBLY U-36
MAGNETIC CLUTCH ADJUSTMENT U-38
MAGNETIC CLUTCH INSPECTION U-38
SOLAR RADIATION SENSOR REMOVAL/INSTALLATION U-39
SOLAR RADIATION SENSOR INSPECTION U-39
AMBIENT TEMPERATURE SENSOR REMOVAL/INSTALLATION U-39
AMBIENT TEMPERATURE SENSOR INSPECTION U-40
CABIN TEMPERATURE SENSOR REMOVAL/INSTALLATION U-40
CABIN TEMPERATURE SENSOR INSPECTION U-41
EVAPORATOR TEMPERATURE SENSOR REMOVAL/INSTALLATION U-41
EVAPORATOR TEMPERATURE SENSOR INSPECTION U-41
WATER TEMPERATURE SENSOR REMOVAL/INSTALLATION U-42
WATER TEMPERATURE SENSOR INSPECTION U-42
REFRIGERANT PRESSURE SWITCH REMOVAL/INSTALLATION U-42
REFRIGERANT PRESSURE SWITCH INSPECTION U-43
CLIMATE CONTROL UNIT REMOVAL U-44
CLIMATE CONTROL UNIT INSTALLATION U-45
CLIMATE CONTROL UNIT DISASSEMBLY/ASSEMBLY U-45
CLIMATE CONTROL UNIT WIRE ADJUSTMENT U-46
CLIMATE CONTROL UNIT INSPECTION U-47
FAN SWITCH INSPECTION U-52
DEFROSTER SWITCH INSPECTION U-52
ON-BOARD DIAGNOSTIC U-53
DIAGNOSTIC TROUBLE CODE NUMBER INSPECTION U-53
DTC 02 ..... U-56
DTC 06 ..... U-56
DTC 07 ..... U-57
DTC 10 ..... U-57
DTC 11 ..... U-57
DTC 12 ..... U-58
DTC 13 ..... U-58
DTC 14 ..... U-59
DTC 15 ..... U-59
DTC 18 ..... U-59
DTC 19 ..... U-60
DTC 21 ..... U-60
DTC 22 ..... U-61
DTC 58 ..... U-61
DTC 59 ..... U-61
DTC 02, 18, 21 (WHEN TWO OR MORE DTCS ARE INDICATED AT THE SAME TIME) U-62
DTC 06, 10, 12, 14, 18, 21 (WHEN TWO OR MORE DTCS ARE INDICATED AT THE SAME TIME) U-62

DTC 07, 11, 13, 15, 19, 22 (WHEN TWO OR MORE DTCS ARE INDICATED AT THE SAME TIME) U-63
DTC 19, 22 (WHEN TWO OR MORE DTCS ARE INDICATED AT THE SAME TIME) U-63
TROUBLESHOOTING U-64
FOREWORD U-64
TROUBLESHOOTING INDEX U-64
NO.1 INSUFFICIENT AIR (OR NO AIR) BLOWN FROM VENTS U-65
NO.2 AMOUNT OF AIR BLOWN FROM VENTS DOES NOT CHANGE U-65
NO.3 AMOUNT OF AIR BLOWN FROM VENTS DOES NOT CHANGE U-67
NO.4 AIR INTAKE MODE DOES NOT CHANGE U-68
NO.5 NO TEMPERATURE CONTROL WITH CLIMATE CONTROL UNIT U-70
NO.6 WINDSHIELD FOGGED U-70
NO.7 AIR FROM VENTS COLD ENOUGH U-72
NO.8 NO COOL AIR U-75
NO.9 NOISE WHILE OPERATING A/C SYSTEM U-76

LOCATION INDEX

BASIC SYSTEM

A6E850001040W01

L.H.D.

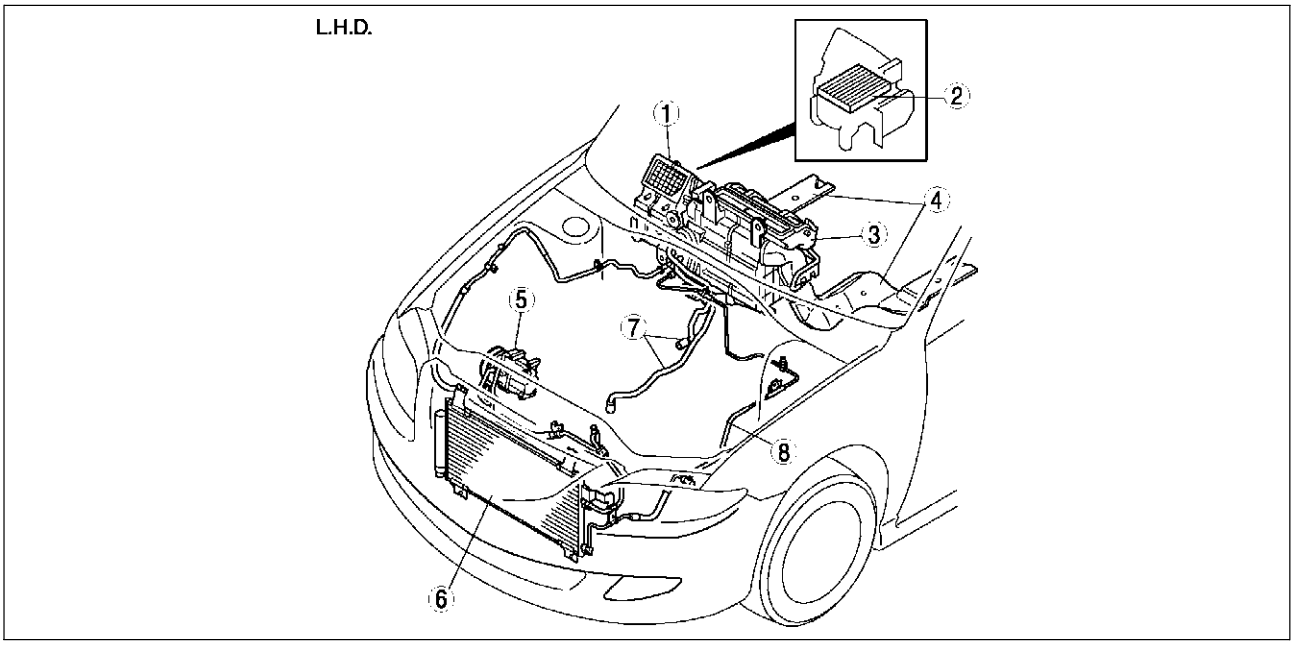

A6E8500W001

R.H.D.

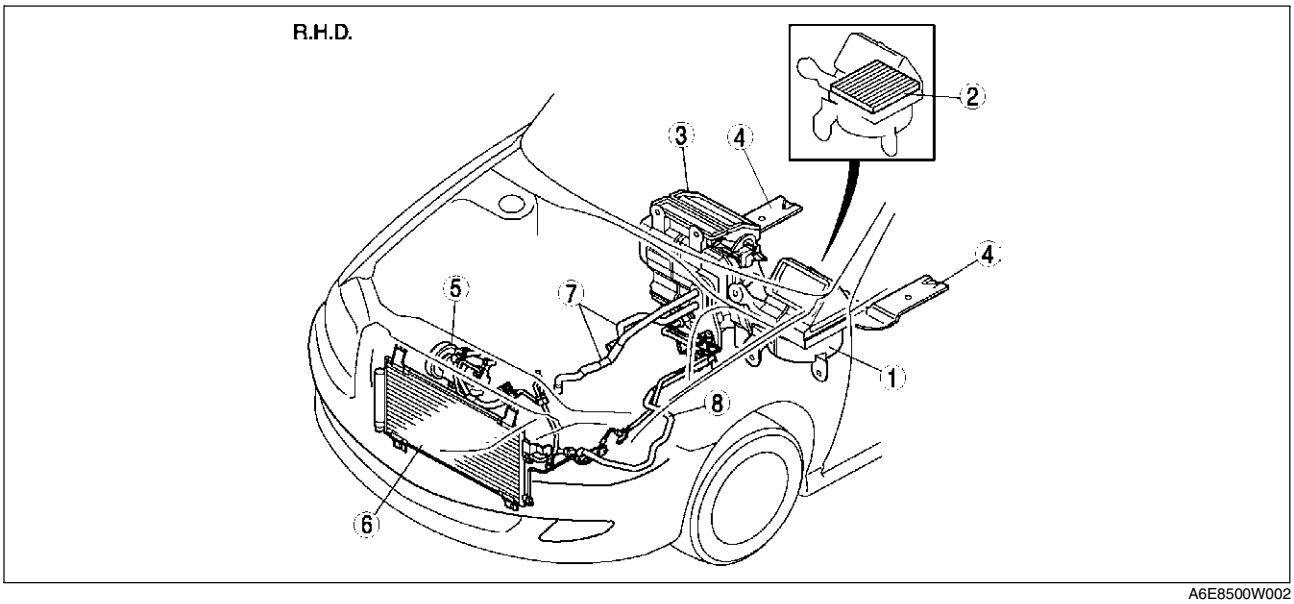

A6E8500W002

1	Blower unit (See U–14 BLOWER UNIT REMOVAL/INSTALLATION) (SeeU–14 BLOWER UNIT DISASSEMBLY/ASSEMBLY)
2	Air filter (See U–15 AIR FILTER REMOVAL/INSTALLATION) (See U–15 AIR FILTER INSPECTION)
3	A/C unit (See U–15 A/C UNIT REMOVAL/INSTALLATION) (See U–18 A/C UNIT DISASSEMBLY/ASSEMBLY)

4	Rear heat duct (See U–23 REAR HEAT DUCT REMOVAL/INSTALLATION)
5	A/C compressor (See U–23 A/C COMPRESSOR REMOVAL/INSTALLATION)
6	Condenser (See U–24 CONDENSER REMOVAL/INSTALLATION) (See U–24 CONDENSER INSPECTION)
7	Heater hose
8	Refrigerant lines (See U–25 REFRIGERANT LINES REMOVAL/INSTALLATION)

U

CONTROL SYSTEM

A6E850001042W01

L.H.D.

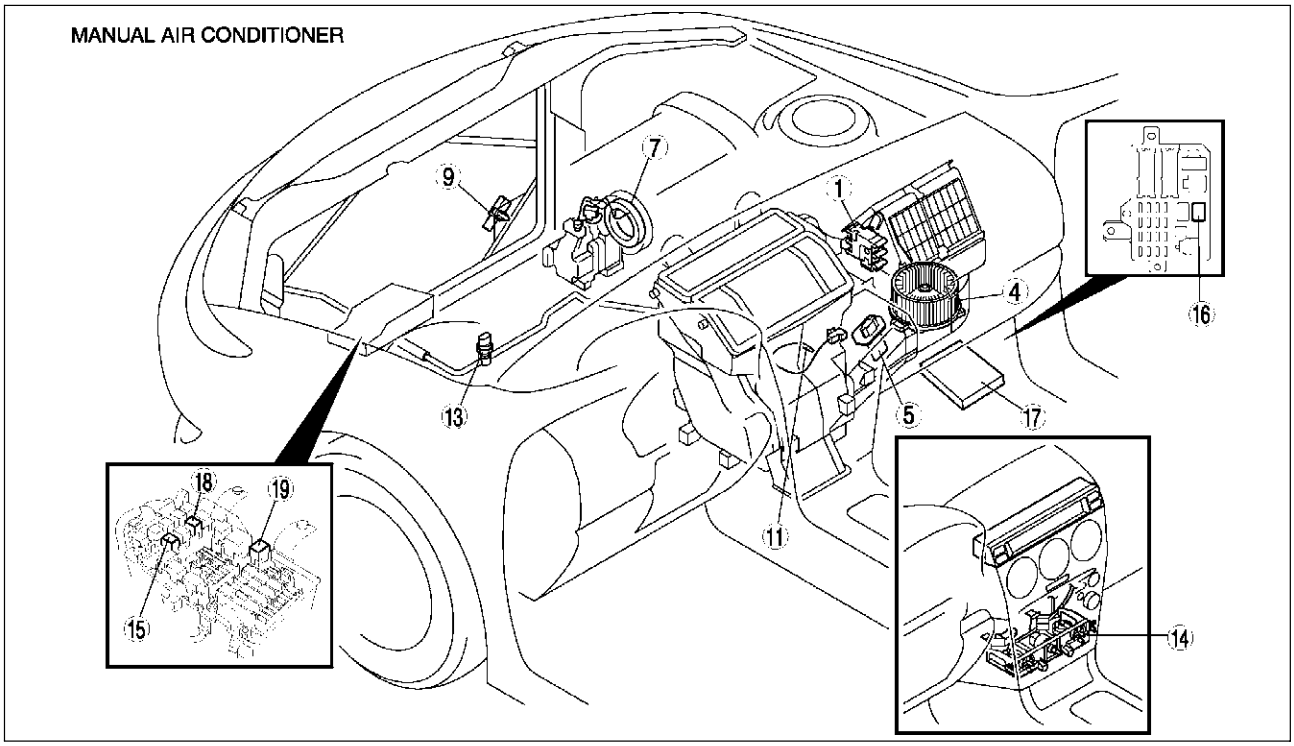

A6E8500W003

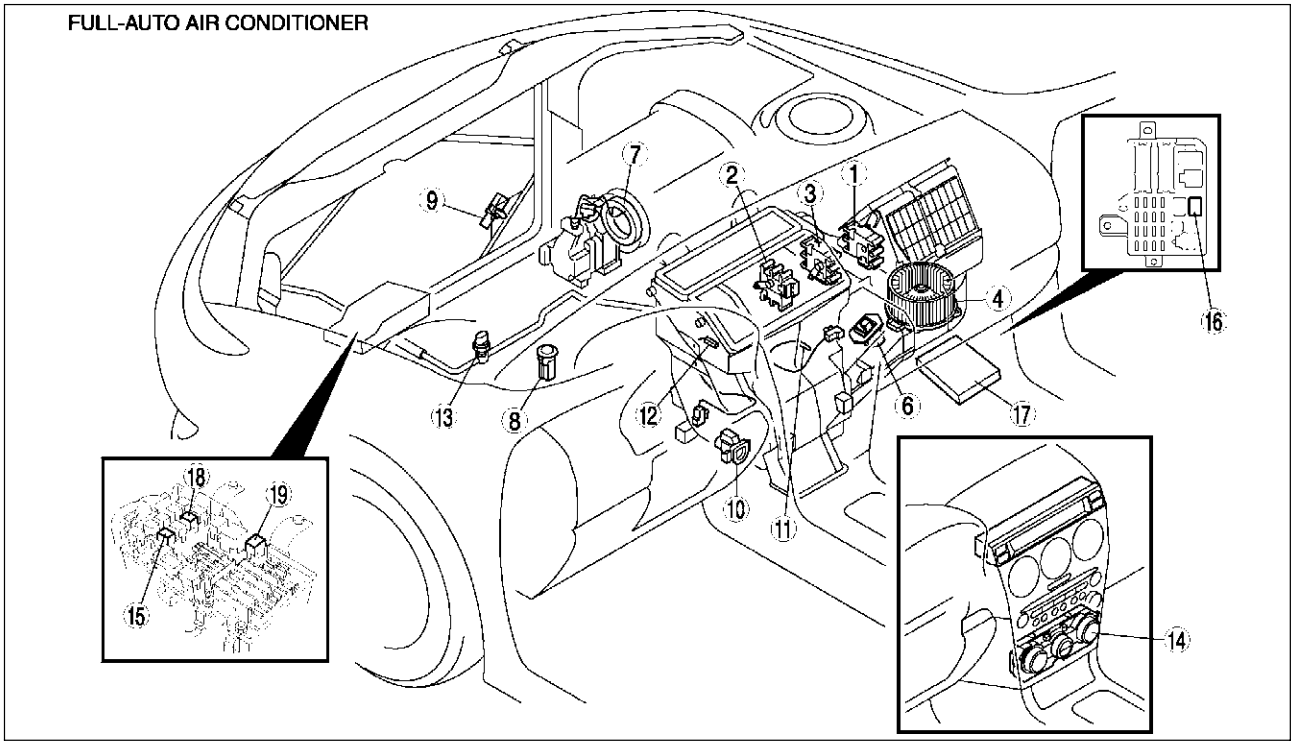

A6E8500W004

1	Air intake actuator (See U–30 AIR INTAKE ACTUATOR REMOVAL/INSTALLATION) (See U–30 AIR INTAKE ACTUATOR INSPECTION)
2	Air mix actuator (See U–31 AIR MIX ACTUATOR REMOVAL/INSTALLATION) (See U–32 AIR MIX ACTUATOR INSPECTION)
3	Airflow mode actuator (See U–33 AIRFLOW MODE ACTUATOR REMOVAL/INSTALLATION) (See U–34 AIRFLOW MODE ACTUATOR INSPECTION)
4	Blower motor (See U–35 BLOWER MOTOR REMOVAL/INSTALLATION) (See U–35 BLOWER MOTOR INSPECTION)
5	Resistor (See U–35 RESISTOR REMOVAL/INSTALLATION) (See U–36 RESISTOR INSPECTION)
6	Power MOS FET (See U–36 POWER MOS FET REMOVAL/INSTALLATION) (See U–36 POWER MOS FET INSPECTION)
7	Magnetic clutch (See U–36 MAGNETIC CLUTCH DISASSEMBLY/ASSEMBLY) (See U–38 MAGNETIC CLUTCH ADJUSTMENT) (See U–38 MAGNETIC CLUTCH INSPECTION)
8	Solar radiation sensor (See U–39 SOLAR RADIATION SENSOR REMOVAL/INSTALLATION) (See U–39 SOLAR RADIATION SENSOR INSPECTION)
9	Ambient temperature sensor (See U–39 AMBIENT TEMPERATURE SENSOR REMOVAL/INSTALLATION) (See U–40 AMBIENT TEMPERATURE SENSOR INSPECTION)
10	Cabin temperature sensor (See U–40 CABIN TEMPERATURE SENSOR REMOVAL/INSTALLATION) (See U–41 CABIN TEMPERATURE SENSOR INSPECTION)
11	Evaporator temperature sensor (See U–41 EVAPORATOR TEMPERATURE SENSOR REMOVAL/INSTALLATION) (See U–41 EVAPORATOR TEMPERATURE SENSOR INSPECTION)
12	Water temperature sensor (See U–42 WATER TEMPERATURE SENSOR REMOVAL/INSTALLATION) (See U–42 WATER TEMPERATURE SENSOR INSPECTION)
13	Refrigerant pressure switch (See U–42 REFRIGERANT PRESSURE SWITCH REMOVAL/INSTALLATION) (See U–43 REFRIGERANT PRESSURE SWITCH INSPECTION)
14	Climate control unit (See U–44 CLIMATE CONTROL UNIT REMOVAL) (See U–45 CLIMATE CONTROL UNIT INSTALLATION) (See U–45 CLIMATE CONTROL UNIT DISASSEMBLY/ASSEMBLY) (See U–46 CLIMATE CONTROL UNIT WIRE ADJUSTMENT) (See U–47 CLIMATE CONTROL UNIT INSPECTION)
15	A/C relay (See T–24 RELAY INSPECTION)
16	Blower relay (See T–24 RELAY INSPECTION)
17	PCM (See F–45 PCM INSPECTION)
18	Rear window defroster relay (See T–24 RELAY INSPECTION)
19	TNS relay (See T–24 RELAY INSPECTION)

R.H.D.

MANUAL AIR CONDITIONER

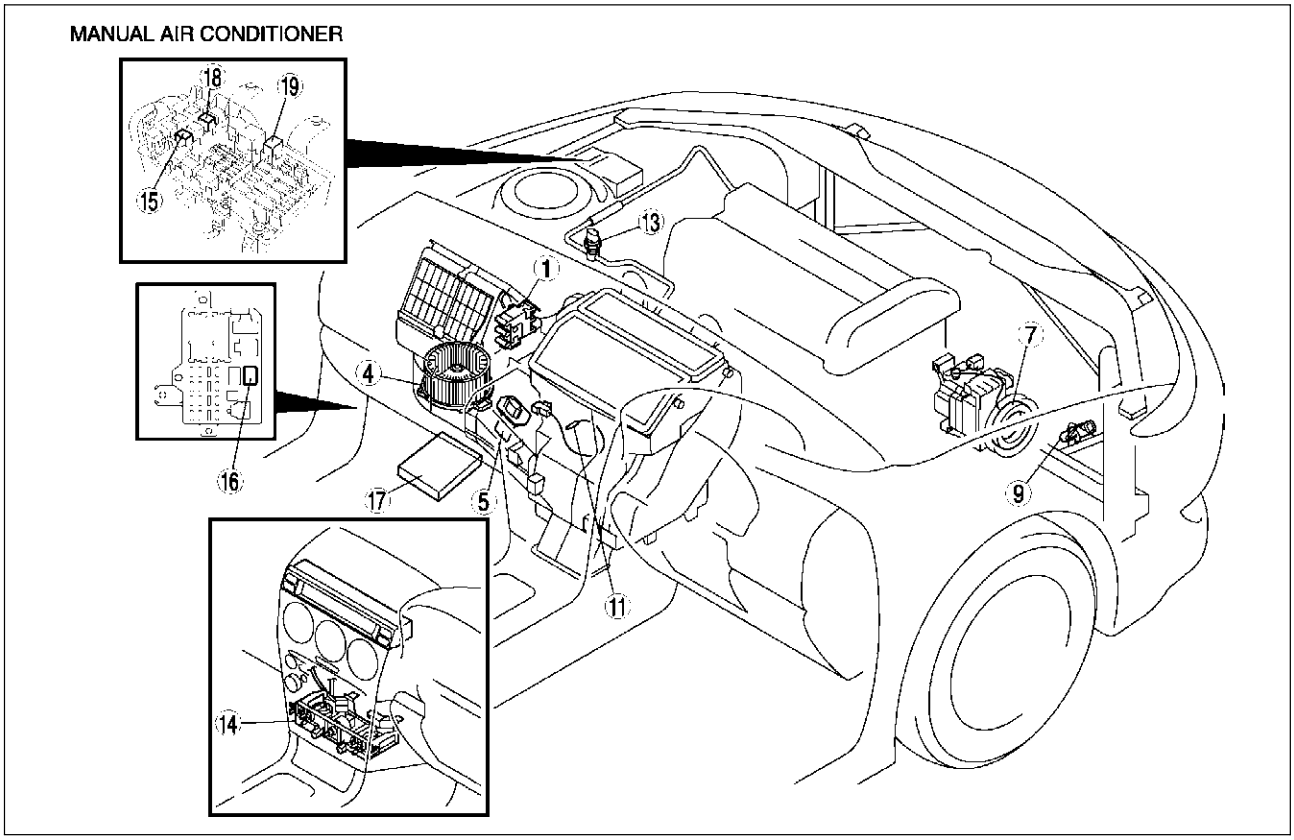

A6E8500W005

FULL-AUTO AIR CONDITIONER

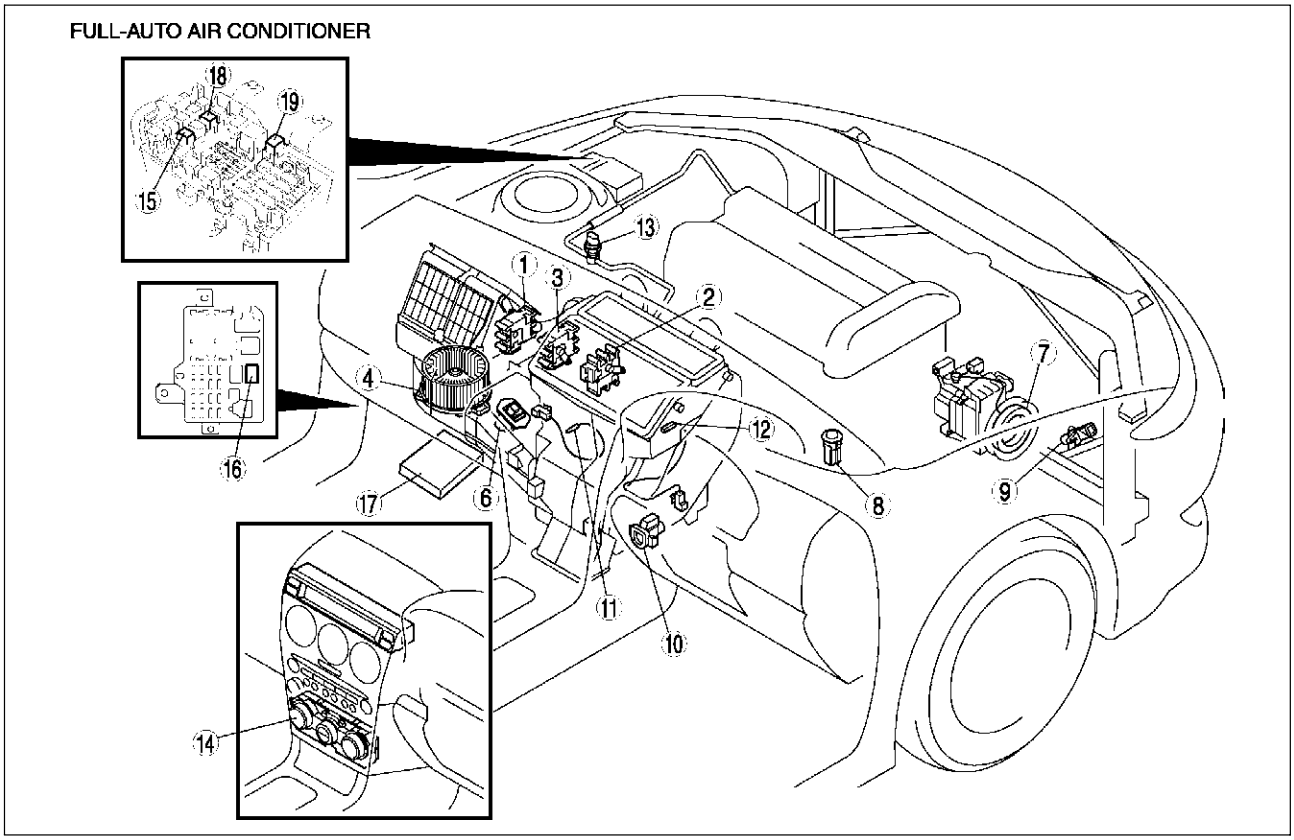

A6E8500W006

1	Air intake actuator (See U–30 AIR INTAKE ACTUATOR REMOVAL/INSTALLATION) (See U–30 AIR INTAKE ACTUATOR INSPECTION)
2	Air mix actuator (See U–31 AIR MIX ACTUATOR REMOVAL/INSTALLATION) (See U–32 AIR MIX ACTUATOR INSPECTION)
3	Airflow mode actuator (See U–33 AIRFLOW MODE ACTUATOR REMOVAL/INSTALLATION) (See U–34 AIRFLOW MODE ACTUATOR INSPECTION)
4	Blower motor (See U–35 BLOWER MOTOR REMOVAL/INSTALLATION) (See U–35 BLOWER MOTOR INSPECTION)
5	Resistor (See U–35 RESISTOR REMOVAL/INSTALLATION) (See U–36 RESISTOR INSPECTION)
6	Power MOS FET (See U–36 POWER MOS FET REMOVAL/INSTALLATION) (See U–36 POWER MOS FET INSPECTION)
7	Magnetic clutch (See U–36 MAGNETIC CLUTCH DISASSEMBLY/ASSEMBLY) (See U–38 MAGNETIC CLUTCH ADJUSTMENT) (See U–38 MAGNETIC CLUTCH INSPECTION)
8	Solar radiation sensor (See U–39 SOLAR RADIATION SENSOR REMOVAL/INSTALLATION) (See U–39 SOLAR RADIATION SENSOR INSPECTION)
9	Ambient temperature sensor (See U–39 AMBIENT TEMPERATURE SENSOR REMOVAL/INSTALLATION) (See U–40 AMBIENT TEMPERATURE SENSOR INSPECTION)
10	Cabin temperature sensor (See U–40 CABIN TEMPERATURE SENSOR REMOVAL/INSTALLATION) (See U–41 CABIN TEMPERATURE SENSOR INSPECTION)
11	Evaporator temperature sensor (See U–41 EVAPORATOR TEMPERATURE SENSOR REMOVAL/INSTALLATION) (See U–41 EVAPORATOR TEMPERATURE SENSOR INSPECTION)
12	Water temperature sensor (See U–42 WATER TEMPERATURE SENSOR REMOVAL/INSTALLATION) (See U–42 WATER TEMPERATURE SENSOR INSPECTION)
13	Refrigerant pressure switch (See U–42 REFRIGERANT PRESSURE SWITCH REMOVAL/INSTALLATION) (See U–43 REFRIGERANT PRESSURE SWITCH INSPECTION)
14	Climate control unit (See U–44 CLIMATE CONTROL UNIT REMOVAL) (See U–45 CLIMATE CONTROL UNIT INSTALLATION) (See U–45 CLIMATE CONTROL UNIT DISASSEMBLY/ASSEMBLY) (See U–46 CLIMATE CONTROL UNIT WIRE ADJUSTMENT) (See U–47 CLIMATE CONTROL UNIT INSPECTION)
15	A/C relay (See T–24 RELAY INSPECTION)
16	Blower relay (See T–24 RELAY INSPECTION)
17	PCM (See F–45 PCM INSPECTION)
18	Rear window defroster relay (See T–24 RELAY INSPECTION)
19	TNS relay (See T–24 RELAY INSPECTION)

SERVICE WARNINGS

HANDLING REFRIGERANT

A6E851001039W01

- **Avoid breathing air conditioning refrigerant or lubricant vapor. Exposure may irritate eyes, nose and throat. Also, due to environmental concerns, we urge use of recovery/recycling/recharging equipment when draining R-134a from the air conditioning system. If accidental system discharge occurs, ventilate work area before resuming service.**
- **Do not perform pressure test or leak test for R-134a service equipment and/or vehicle air conditioning system using compressed air. Some mixtures of air and R-134a have been shown to be combustible at elevated pressures. These mixtures, if ignited, may cause injury or property damage. Additional health and safety information may be obtained from refrigerant manufacturers.**
- **Do not allow the refrigerant to leak near fire or any kind of heat. A poisonous gas may be generated if the refrigerant gas contacts fire or heat such as from cigarettes and heaters. When carrying out any operation that can cause refrigerant leakage, extinguish or remove the above-mentioned heat sources and maintain adequate ventilation.**
- **Handling liquid refrigerant is dangerous. A drop of it on the skin can result in localized frostbite. When handling the refrigerant, wear gloves and safety goggles. If refrigerant splashes into the eyes, immediately wash them with clean water and consult a doctor.**

STORING REFRIGERANT

A6E851001039W02

- **The refrigerant container is highly pressurized. If it is subjected to high heat, it could explode, scattering metal fragments and liquid refrigerant that can seriously injure you. Store the refrigerant at temperatures below 40 °C {104 °F}.**

SERVICE CAUTIONS

HANDLING INSUFFICIENT REFRIGERANT LEVEL

A6E851201039W02

- **If an insufficient refrigerant level is detected at troubleshooting, do not charge (add) the refrigerant. Because an accurate amount of refrigerant cannot be determined from the pressure indicated on the manifold gauge, never charge the refrigerant. If there is too much or too little refrigerant from the refilling, there may be secondary problems such as damage to the refrigerant cycle parts, or a decrease of cooling performance. Therefore, if it is determined that the refrigerant level is insufficient, completely remove refrigerant from the refrigerant cycle and refill with refrigerant to the specified amount.**

HANDLING COMPRESSOR OIL

A6E851201039W01

- **Use only ATMOS GU10 compressor oil for this vehicle. Using a PAG oil other than ATMOS GU10 compressor oil can damage the A/C compressor.**
- **Do not spill ATMOS GU10 compressor oil on the vehicle. A drop of compressor oil on the vehicle surface can eat away at the paint. If oil gets on the vehicle, wipe it off immediately.**
- **ATMOS GU10 compressor oil (PAG oil) has a higher moisture absorption efficiency than the previously used mineral oil. If moisture mixes with the compressor oil, the refrigerant system could be damaged. Therefore, install caps immediately after using the compressor oil or removing refrigerant system parts to prevent moisture absorption.**

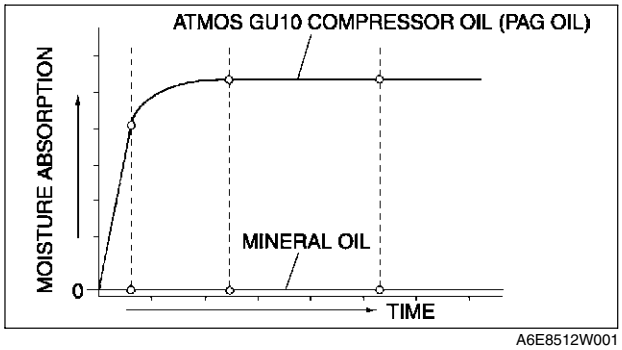

A6E8512W001

REFRIGERANT SYSTEM SERVICE PROCEDURES

GAS CHARGING SET INSTALLATION

A6E851401039W01

1. Fully close the valves of the **SST** (49 C061 001).
2. Connect the **SSTs** (49 C061 002, 49 C061 003) to the high- and low-pressure side joints of the **SST** (49 C061 001).
3. Connect the **SSTs** (49 C061 006A, 49 C061 007) to the ends of the **SSTs** (49 C061 002, 49 C061 003).
4. Connect the **SSTs** (49 C061 006A, 49 C061 007) to the charging valves.

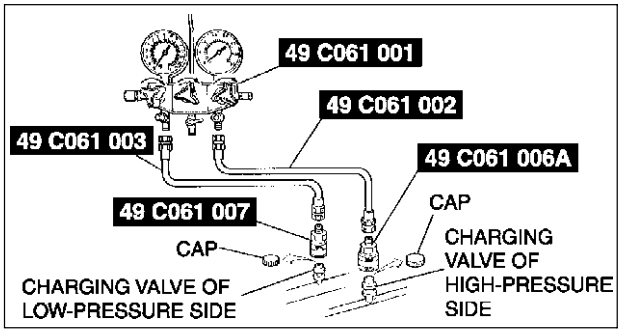

A6E8514W003

RECOVERY

A6E851478834W01

1. Connect an R-134a recovery/recycling/recharging device to the vehicle and follow the device manufacturer's instructions.

CHARGING

A6E851478834W02

Caution

- **Do not exceed the specification when charging the system with refrigerant. Doing so will decrease the efficiency of the air conditioner or damage the refrigeration cycle parts.**

Charging Recycled R-134a Refrigerant

1. Connect an R-134a recovery/recycling/recharging device to the vehicle and follow the device manufacturer's instructions.

Charging Preparation

1. Install the **SSTs** (gas charging set).
2. Connect the tap pin side of the **SST** (49 C061 004) to the air purge valve of the **SST** (49C061 001).
3. Connect the **SST** (49 C061 005) to the center joint of the **SST** (49 C061 001).
4. Connect the **SST** (49 C061 005) to the vacuum pump.
5. Connect the **SST** (49 C061 004) to the refrigerant tank.
6. Place the refrigerant tank on the scale.

Regular amount of refrigerant (approximate quantity)
470 g {16.6 oz}: L.H.D.
430 g {15.2 oz}: R.H.D.

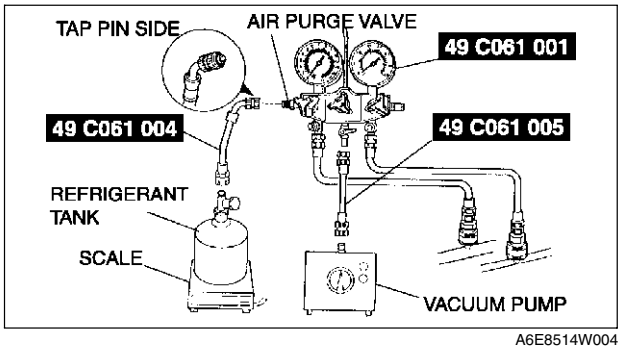

A6E8514W004

U

Evacuation

1. Open all the valves of the **SST** (49 C061 001).

Caution

- **Close the SST (49 C061 001) valve immediately after stopping the vacuum pump. If the valve is left open, the vacuum pump oil will flow back into the refrigeration cycle and cause a decrease in the efficiency of the air conditioner.**

2. Start the vacuum pump and let it operate for **15 minutes**.

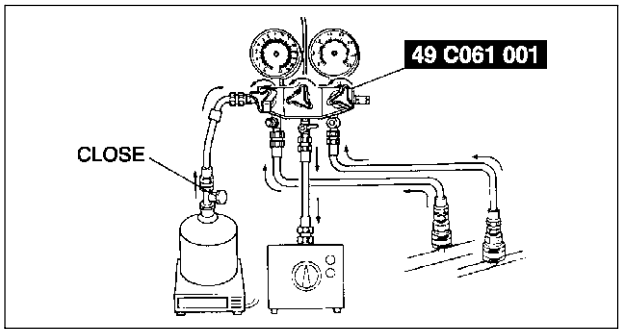

A6E8514W005

3. Verify that high- and low-pressure side readings of the **SST** (49 C061 001) are at **–101 kPa {–760 mmHg, –29.9 inHg}**. Close each valve of the **SST** (49 C061 001).

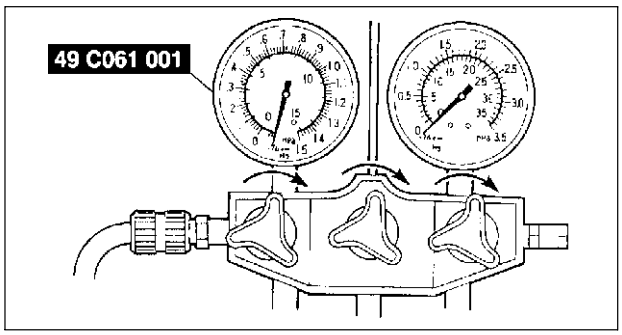

A6E8514W006

Airtightness Check

1. Stop the vacuum pump and wait for **5 minutes**.
2. Check the high- and low-pressure side readings of the **SST** (49 C061 001).
   - If the reading has changed, inspect for leakage and go to Evacuation. (See U–10 Evacuation.)
   - If the reading has not changed, go to Charging New R-134a Refrigerant. (See U–10 Charging New R-134a Refrigerant.)

Charging New R-134a Refrigerant

1. Open the valve of the refrigerant tank.
2. Weigh the refrigerant tank to charge the suitable amount of refrigerant.

Warning

- **If the refrigerant system is charged with a large amount of refrigerant when inspecting for gas leakage, and if any leakage should occur, the refrigerant will be released into the atmosphere. In order to prevent the accidental release of refrigerant which can destroy the ozone layer in the stratosphere, follow the proper procedures and charge with only a small amount of refrigerant when inspecting for gas leakage.**
- **If charging the system with refrigerant using service cans, running the engine with the high-pressure side valve open is dangerous. Pressure within the service cans will increase and the cans could explode, scattering metal fragments and liquid refrigerant that can seriously injure you. Therefore, do not open the high-pressure side valve while the engine is running.**

Caution

- **Always being charging of refrigerant from the high-pressure side. If changing is begun from the low-pressure side, the vanes of the A/C compressor will not be released and abnormal noise may result.**

3. Open the high-pressure side valve of the **SST** (49 C061 001).

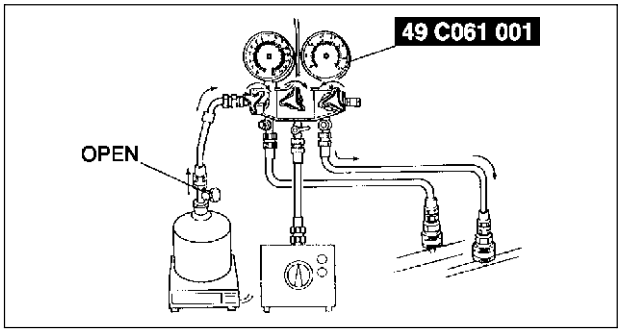

A6E8514W007

4. When the low-pressure side reading increases to **0.098 MPa {1.0 kgf/cm^2, 14 psi}**, close the high-pressure side valve of the **SST** (49 C061 001).
5. Inspect for leakage from the cooler pipe/hose connections using the **SST** (gas leak tester).
   - If there is no leakage, go to Step 7.
   - If leakage is found at a loose joint, tighten the joint, then go to next step.
6. Inspect for leakage again.
   - If there is no leakage after tightening the joint, go to next step.
   - If there is still a leakage at the same joint, discharge the refrigerant and then repair the joint. Repeat the charging procedure from evacuation.

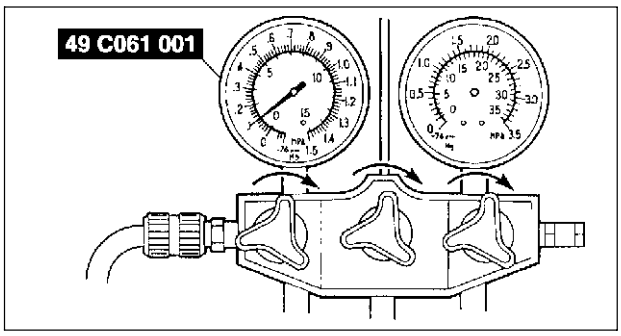

A6E8514W008

Warning
- **If charging the system with refrigerant using service cans, running the engine with the high-pressure side valve open is dangerous. Pressure within the service cans will increase and the cans could explode, scattering metal fragments and liquid refrigerant that can seriously injure you. Therefore, do not open the high-pressure side valve while the engine is running.**

7. Open the high-pressure side valve of the **SST** (49 C061 001) and charge with refrigerant until the weight of refrigerant tank has decreased **250 g {8.83 oz}** from the amount in Step 2.

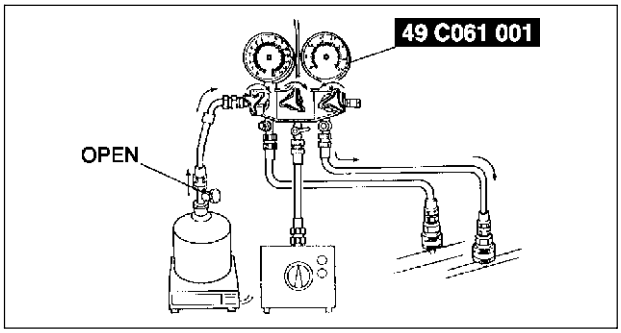

A6E8514W007

8. Close the high-pressure side valve of the **SST** (49 C061 001).

Warning
- **If charging the system with refrigerant using service cans, running the engine with the high-pressure side valve open is dangerous. Pressure within the service cans will increase and the cans could explode, scattering metal fragments and liquid refrigerant that can seriously injure you. Therefore, do not open the high-pressure side valve while the engine is running.**

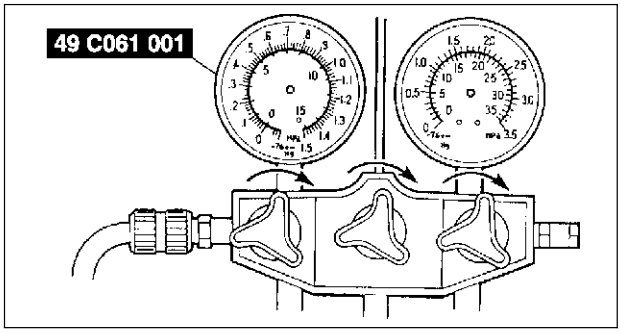

A6E8514W009

9. Start the engine and actuate the A/C compressor.

U

10. Open the low-pressure side valve of the **SST** (49 C061 001) and charge with refrigerant until the weight of the refrigerant tank has decreased regular amount from the amount in Step 2.
11. Close the low-pressure side valve of the **SST** (49 C061 001) and the valve of the refrigerant tank.
12. Stop the engine and A/C compressor.

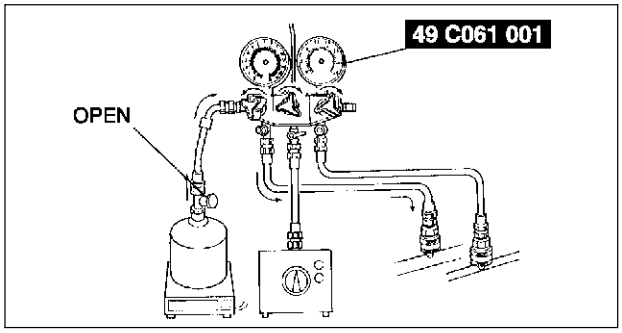

A6E8514W010

Leak Test

1. Inspect for leakage using the **SST** (gas leak tester).
   - If there is no leakage, go to Step 3.
   - If leakage is found at a loose joint, tighten the joint, then go to next step.
2. Inspect for leakage again.
   - If there is no leakage after tightening the joint, go to next step.
   - If there is still leakage at the same joint, discharge the refrigerant and then repair the joint. Repeat the charging procedure from evacuation.
3. Disconnect the **SSTs** (49 C061 006A, 49 C061 007) from the charging valves.
4. Install the caps to the charging valves.

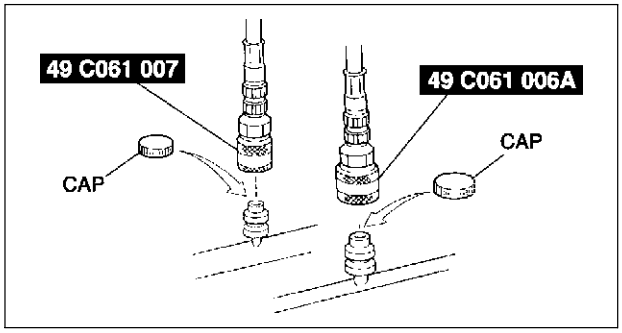

A6E8514W011

REFRIGERANT PRESSURE CHECK

A6E851478834W03

1. Install the **SSTs** (gas charging set).
2. Warm up the engine and run it at a constant **1,500 rpm**.
3. Set the fan speed to MAX HI.
4. Turn the A/C switch on.
5. Set the RECIRCULATE mode.
6. Set the temperature control to MAX COLD.
7. Set the VENT mode.
8. Close all the doors and all the windows.
9. Measure the ambient temperature and the high- and low-pressure side reading of the **SST** (49 C061 001).

10. Verify that the intersection of the pressure reading of the **SST** (49 C061 001) and ambient temperature is in the shaded zone.
    - If not as specified, troubleshoot the refrigerant system. (See U–64 TROUBLESHOOTING INDEX.)

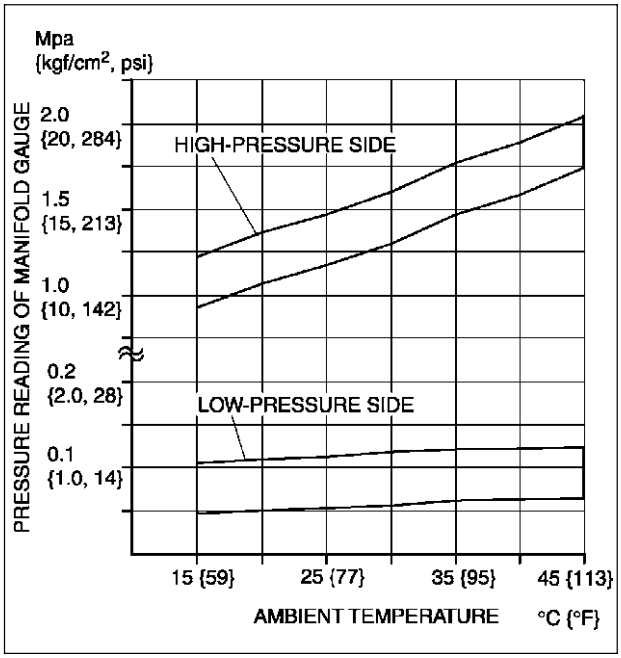

A6E8514W001

REFRIGERANT SYSTEM PERFORMANCE TEST

A6E851401039W02

1. Perform refrigerant pressure check. (See U–12 REFRIGERANT PRESSURE CHECK.)
   - If they are correct, go to next step.
   - If not as specified, troubleshoot the refrigerant system. (See U–64 TROUBLESHOOTING INDEX.)
2. Place a dry-bulb thermometer in the driver-side center ventilator outlet.
3. Warm up the engine and run it at a constant **1,500 rpm**.
4. Set the fan speed to MAX HI.
5. Turn the A/C switch on.
6. Set the RECIRCULATE mode.
7. Set the temperature control to MAX COLD.
8. Set the VENT mode.
9. Close all the doors and all the windows.
10. Wait until the air conditioner output temperature stabilizes.
    Stabilized condition
    - The A/C compressor is repeatedly turned on and off based on the A/C compressor control of center panel (manual air conditioner) or climate control unit (full-auto air condtioner).
11. Record driver-side center ventilator outlet temperature.
12. Determine and record ambient temperature.
13. Verify that the temperature reading is in the shaded zone.
    - If the performance is not within the shaded zone, troubleshoot the refrigerant system. (See U–64 TROUBLESHOOTING INDEX.)

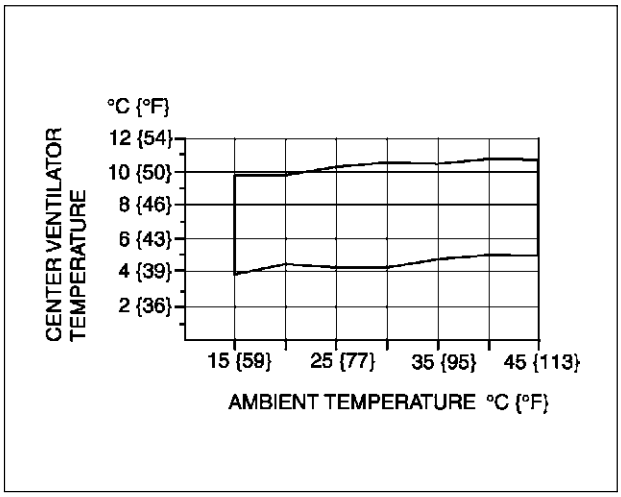

A6E8514W002

BASIC SYSTEM

BLOWER UNIT REMOVAL/INSTALLATION

A6E851661140W01

1. Disconnect the negative battery cable.
2. Remove the dashboard. (See S–82 DASHBOARD REMOVAL/INSTALLATION.)
3. Remove the A/C unit. (See U–15 A/C UNIT REMOVAL/INSTALLATION.)
4. Remove the blower unit.
5. Install in the reverse order of removal.

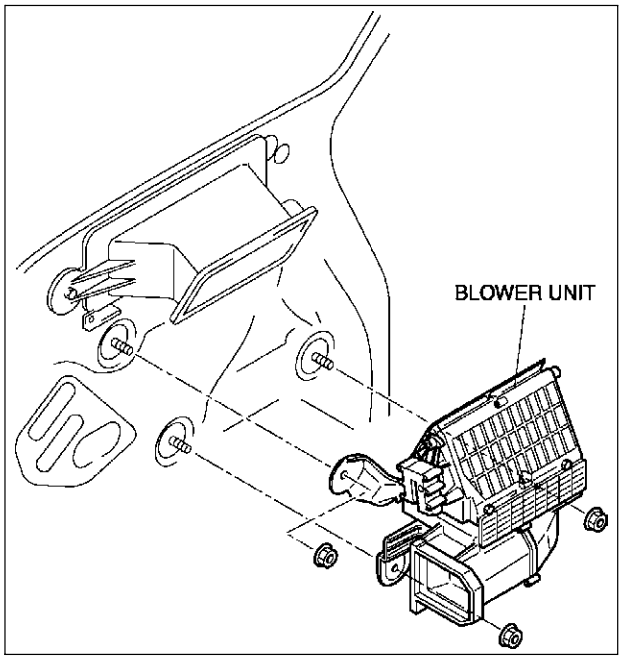

A6E8516W001

BLOWER UNIT DISASSEMBLY/ASSEMBLY

A6E851661140W02

1. Disassemble in the order indicated in the table.

Caution

- **Apply only the specified grease to the link. Otherwise abnormal noise or improper operation may result.**

1	Air filter cover
2	Air filter
3	Blower motor
4	Air intake actuator
5	Air intake crank
6	Air intake door
7	Polyurethane protector
8	Blower case (1)
9	Blower case (2)

2. Assemble in the reverse order of disassembly.

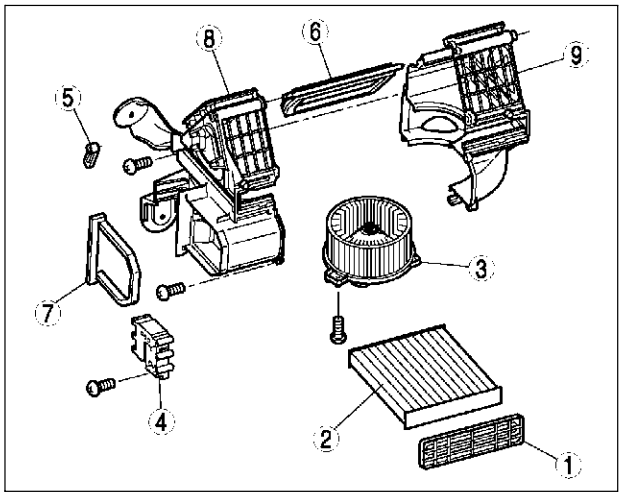

A6E8516W002

AIR FILTER REMOVAL/INSTALLATION

A6E851661140W03

1. Remove the glove compartment.
2. Remove in the order indicated in the table.

1	Air filter cover
2	Air filter

3. Install in the reverse order of removal.

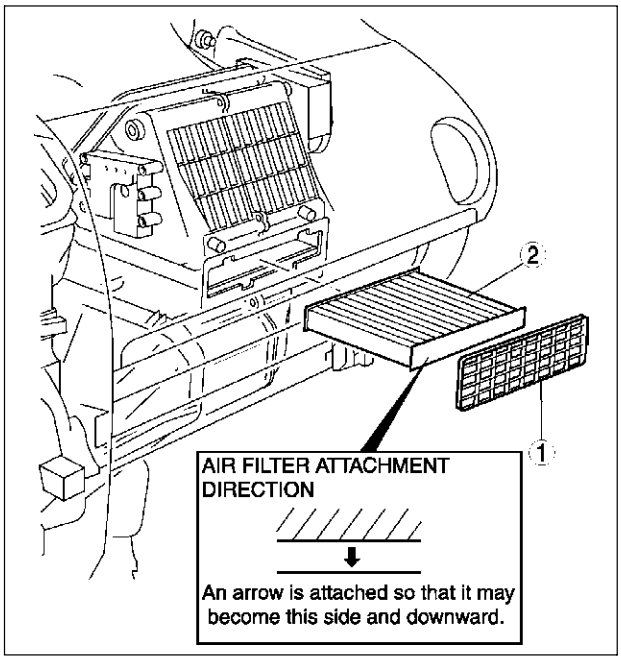

A6E8516W018

AIR FILTER INSPECTION

A6E851661140W04

1. Remove the air filter.
2. Inspect the air filter.
   - If the air filter is damaged, excessively dirty, or foul smelling, replace the air filter.

Note

- The air filter cannot be reused by cleaning it with water or compressed air.
- Replace the air filter at the following interval, depending on operating conditions.

Destinations	Type	Interval (year or km {miles})
Europe (L.H.D. U.K.) specs.	Aldehyde, pollen, and a dust removal	**1 or 20,000 {12,500}**
	Pollen, and a dust removal	**2 or 40,000 {25,000}**
GCC specs.	—	**1 or 20,000 {12,500}**

A/C UNIT REMOVAL/INSTALLATION

A6E851661130W01

1. Disconnect the negative battery cable.
2. Discharge the refrigerant from the system. (See U–9 RECOVERY.) (See U–9 CHARGING.)
3. Drain the engine coolant. (See E–3 ENGINE COOLANT REPLACEMENT.)
4. Remove the dashboard. (See S–82 DASHBOARD REMOVAL/INSTALLATION.)
5. Remove the theft-deterrent control module. (See T–86 THEFT-DETERRENT CONTROL MODULE REMOVAL/INSTALLATION.)

Caution

- **If moisture or foreign material enters the refrigeration cycle, cooling ability will be lowered and abnormal noise will occur. Always immediately plug open fittings after removing any refrigeration cycle parts to keep moisture or foreign material out of the cycle.**

6. Remove in the order indicated in the table. Do not allow compressor oil to spill.

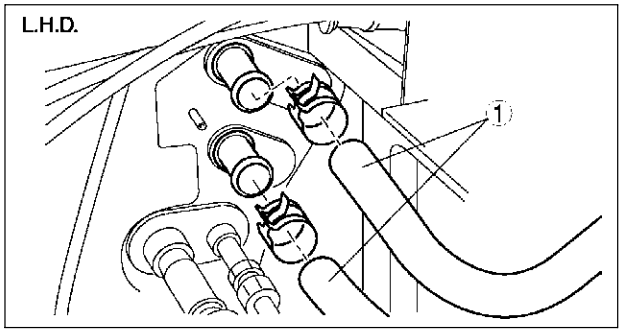

A6E8516W003

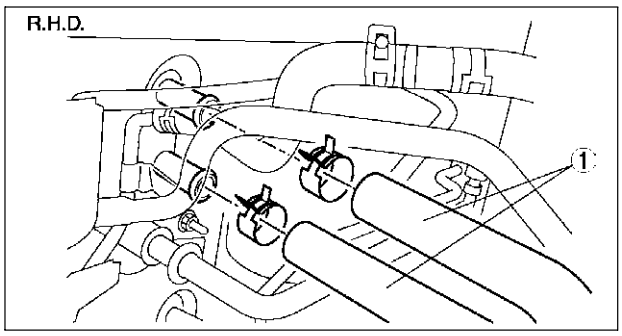

A6E8516W025

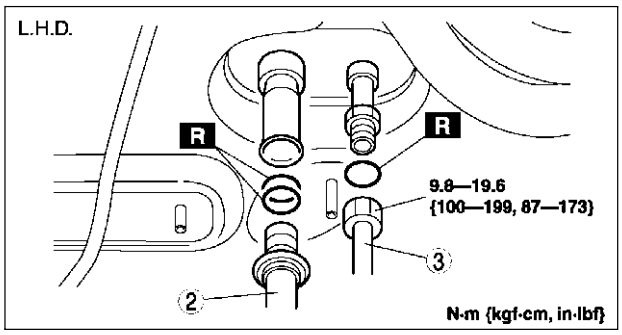

A6E8516W004

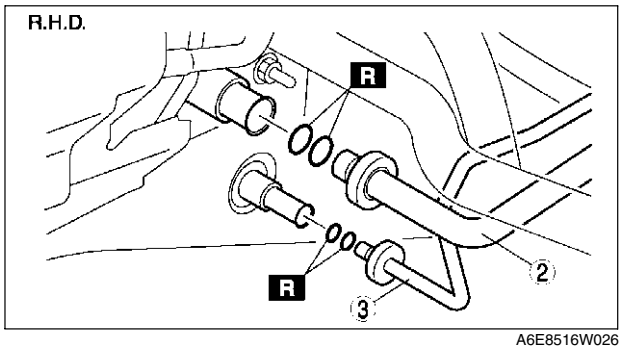

A6E8516W026

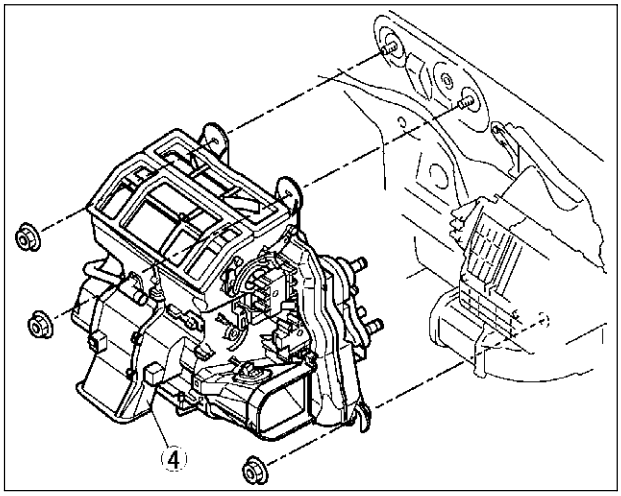

A6E8516W019

1	Heater hose
2	Cooler hose (Lo) (L.H.D.) or cooler pipe No.4 (R.H.D.) (See U–28 Refrigerant Lines Removal Note) (See U–29 Refrigerant Lines Installation Note)
3	Cooler pipe No.3 (See U–28 Refrigerant Lines Removal Note) (See U–29 Refrigerant Lines Installation Note)
4	A/C unit (See U–17 A/C Unit Installation Note)

7. Install in the reverse order of removal.
8. Perform the refrigerant system performance test. (See U–13 REFRIGERANT SYSTEM PERFORMANCE TEST.)

A/C Unit Installation Note

1. When installing a new A/C unit or evaporator, add a supplemental amount of ATMOS GU10 compressor oil into the refrigerant cycle.

   Supplemental amount (approximate quantity)
   25 ml {25 cc, 0.8 fl oz}

U

A/C UNIT DISASSEMBLY/ASSEMBLY

A6E851661130W02

1. Disassemble in the order indicated in the table.
2. Assemble in the reverse order of disassembly.

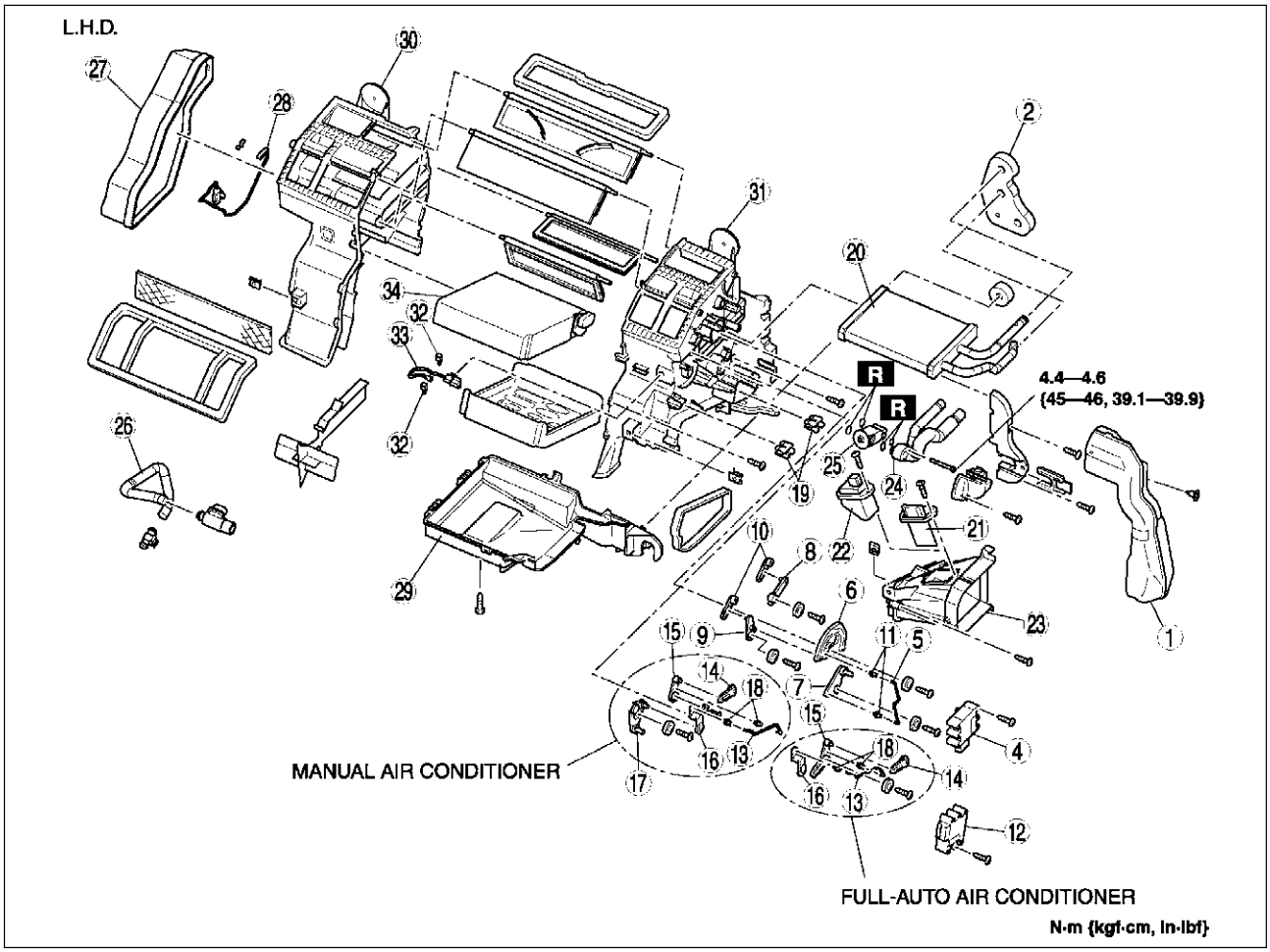

A6E8516W005

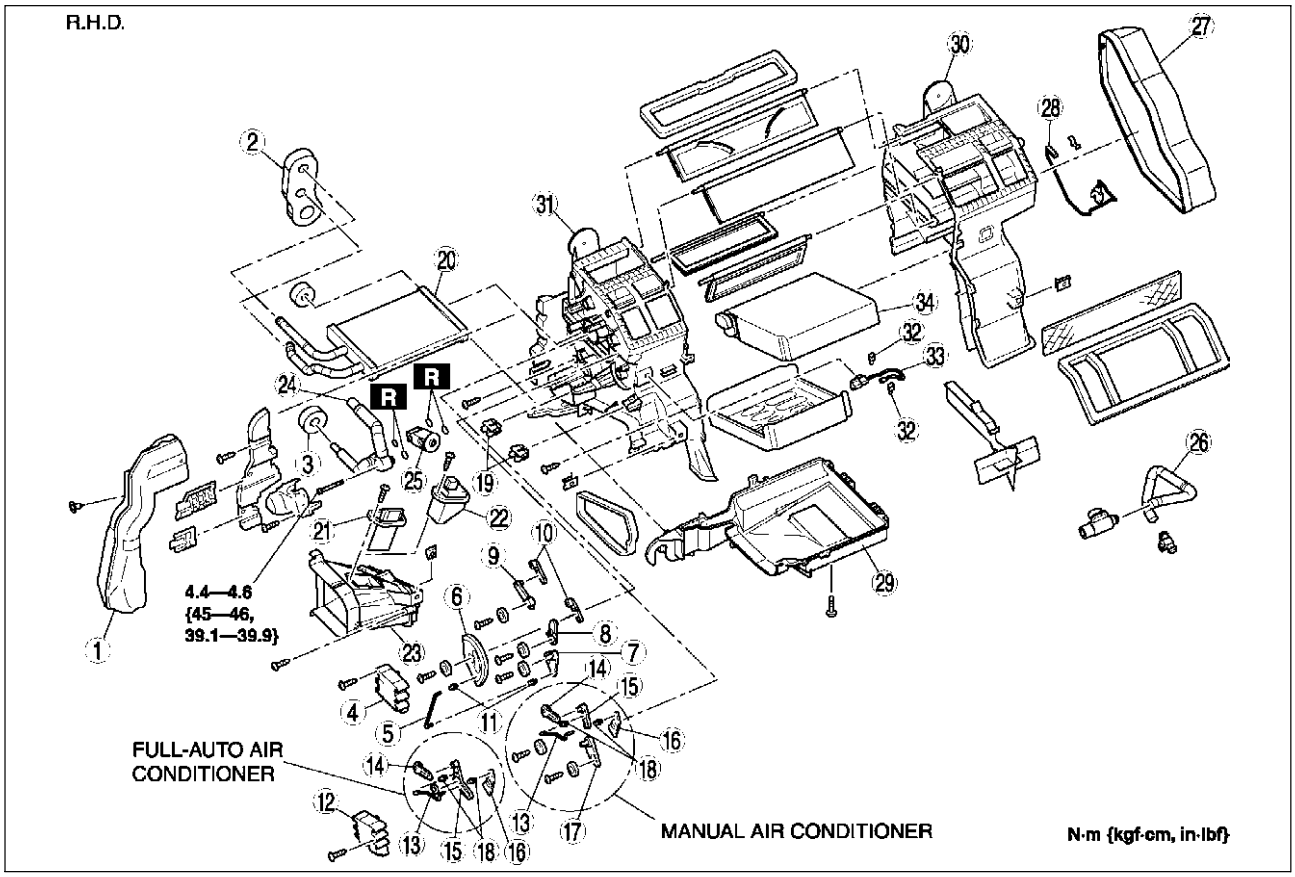

A6E8516W006

1	Duct (1)
2	Polyurethane protector (1)
3	Polyurethane protector (2) (R.H.D.)
4	Airflow mode actuator (full-auto air conditioner)
5	Airflow mode rod (manual air conditioner)
6	Airflow mode main link
7	Airflow mode sub link (1) (manual air conditioner)
8	Airflow mode sub link (2)
9	Airflow mode sub link (3)
10	Airflow mode crank
11	Airflow mode rod holder (manual air conditioner)
12	Air mix actuator (full-auto air conditioner)
13	Air mix rod
14	Air mix crank (1)
15	Air mix link (1)
16	Air mix crank (2)
17	Air mix link (2) (manual air conditioner)
18	Air mix rod holder
19	Wire clamp (manual air conditioner)

20	Heater core
21	Resistor (manual air conditioner)
22	Power MOS FET (full-auto air conditioner)
23	Duct (2)
24	Outlet pipe (SeeU–21 Outlet Pipe Assembly Note)
25	Expansion valve (See U–20 Expansion Valve Assembly Note)
26	Air hose
27	Duct (3)
28	Water temperature sensor (full-auto air conditioner)
29	A/C case (3)
30	A/C case (1)
31	A/C case (2)
32	Sensor clamp (SeeU–20 Sensor Clamp Assembly Note)
33	Evaporator temperature sensor (See U–20 Evaporator Temperature Sensor Assembly Note)
34	Evaporator

U

Evaporator Temperature Sensor Assembly Note

1. Assemble the evaporator temperature sensor as shown in the figure.

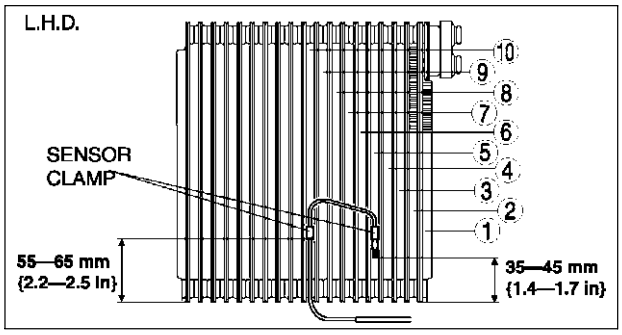

A6E8516W020

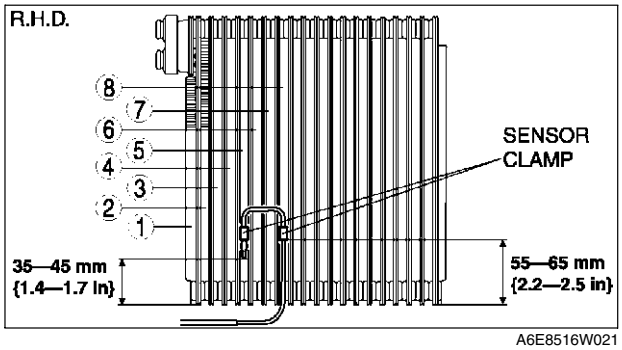

A6E8516W021

Sensor Clamp Assembly Note

1. Attach the sensor clamp as shown in the figure.

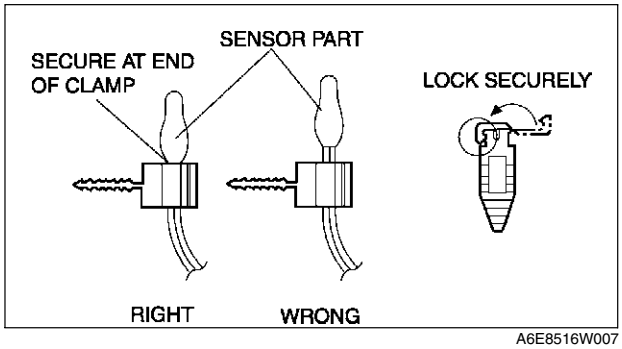

A6E8516W007

Expansion Valve Assembly Note

1. Attach the insulator as shown in the figure.

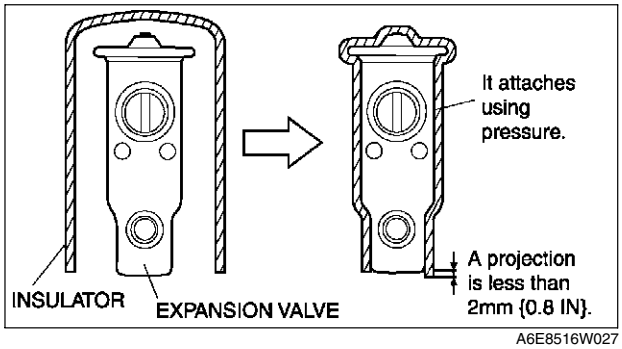

A6E8516W027

Outlet Pipe Assembly Note

1. Wrap the insulator around the outlet pipe as shown in the figure.

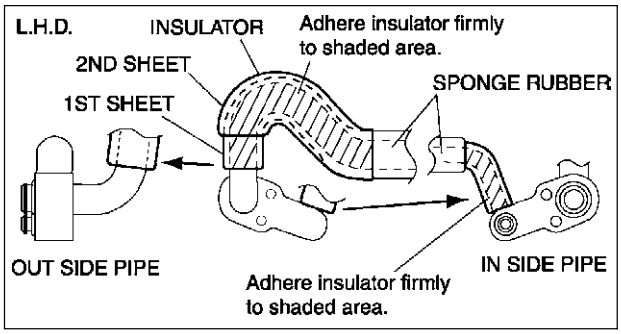

A6E8516W028

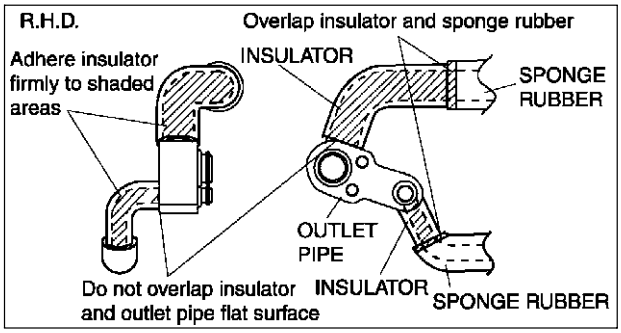

A6E8516W031

EXPANSION VALVE REMOVAL/INSTALLATION

A6E851661130W03

1. Disconnect the negative battery cable.
2. Discharge the refrigerant from the system. (See U–9 RECOVERY.) (See U–9 CHARGING.)

Caution

- **If moisture or foreign material enters the refrigeration cycle, cooling ability will be lowered and abnormal noise will occur. Always immediately plug open fittings after removing any refrigeration cycle parts to keep moisture or foreign material out of the cycle.**

3. Disconnect the cooler hose (Lo) (L.H.D) or cooler pipe No.4 (R.H.D.) and cooler pipe No.3. (See U–25 REFRIGERANT LINES REMOVAL/INSTALLATION.)
4. Remove the dashboard. (See S–82 DASHBOARD REMOVAL/INSTALLATION.)
5. Remove the duct (1).
6. Remove the air mix actuator. (Full-auto air conditioner)
7. Remove the screws and cover.
8. Remove the one plate (L.H.D.) or two plates (R.H.D.).
9. Remove the bolts and shift the outlet pipe. Do not allow compressor oil to spill.

U

10. Remove the expansion valve. Do not allow compressor oil to spill.

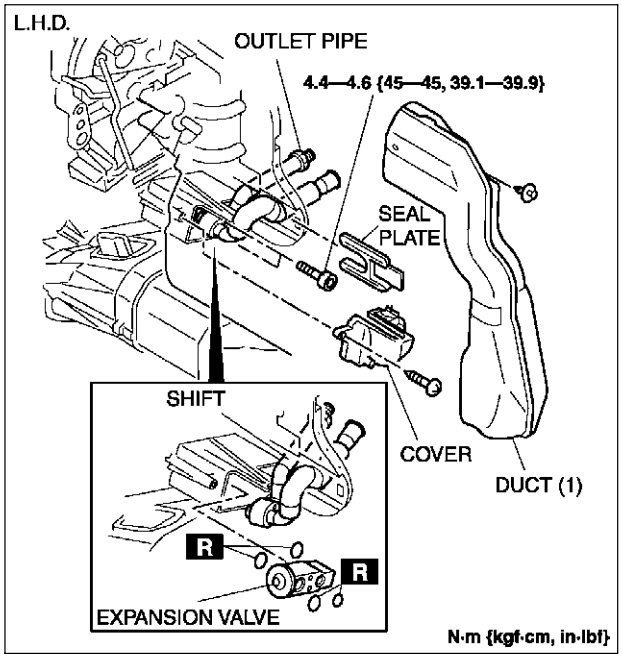

A6E8516W010

11. Install in the reverse order of removal.
12. Perform the refrigerant system performance test. (See U–13 REFRIGERANT SYSTEM PERFORMANCE TEST.)

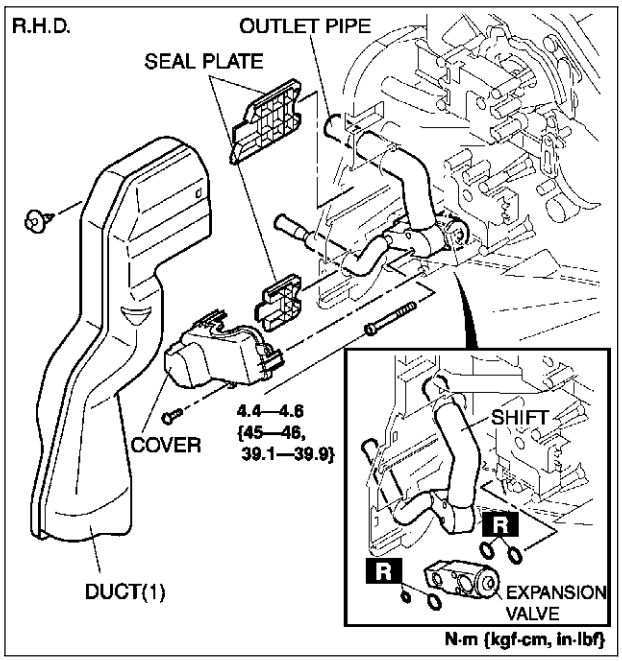

A6E8516W022

EVAPORATOR INSPECTION

A6E851661810W01

1. Remove the A/C unit. (See U–15 A/C UNIT REMOVAL/INSTALLATION.)
2. Remove the evaporator from the A/C unit.
3. Inspect for cracks, damage, and oil leakage.
   - If any problems are found, replace the evaporator.
4. Inspect for bent fins.
   - If any are bent, use a flathead screwdriver to straighten them.

HEATER CORE INSPECTION

A6E851661910W01

1. Remove the A/C unit. (See U–15 A/C UNIT REMOVAL/INSTALLATION.)
2. Remove the heater core from the A/C unit.
3. Inspect for cracks, damage, and coolant leakage.
   - If any problems are found, replace the heater core.
4. Inspect for bent fins.
   - If any are bent, use a flathead screwdriver to straighten them.
5. Verify that the heater core inlet and outlet pipe are not distorted or damaged.
   - Repair with pliers if necessary.

REAR HEAT DUCT REMOVAL/INSTALLATION

A6E851661273W01

1. Turn over the front floor covering. (See S–99 FRONT FLOOR COVERING REMOVAL/INSTALLATION.)
2. Remove in the order indicated in the table.

1	Rear heat duct (Right)
2	Rear heat duct (Left)

3. Install in the reverse order of removal.

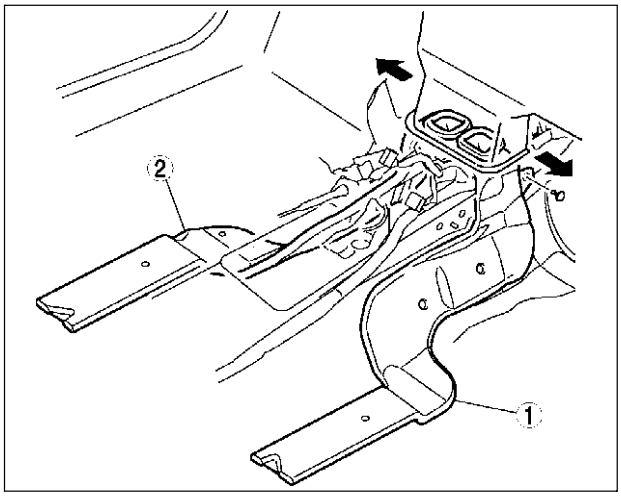

A6E8516W011

A/C COMPRESSOR REMOVAL/INSTALLATION

A6E851661450W01

1. Disconnect the negative battery cable.
2. Discharge the refrigerant from the system. (See U–9 RECOVERY.) (See U–9 CHARGING.)
3. Remove the right side splash shield and mudguard (L.H.D. only).
4. Loosen the drive belt and remove it.

Caution

- **If moisture or foreign material enters the refrigeration cycle, cooling ability will be lowered and abnormal noise will occur. Always immediately plug open fittings after removing any refrigeration cycle parts to keep moisture or foreign material out of the cycle.**

5. Remove in the order indicated in the table. Do not allow compressor oil to spill.

1	Cooler hose (HI) (See U–29 Refrigerant Lines Installation Note)
2	Cooler pipe No.4 (L.H.D.) or cooler hose (LO) (R.H.D.) (See U–29 Refrigerant Lines Installation Note)
3	Magnetic clutch connector
4	A/C compressor (See U–24 A/C Compressor Installation Note)

6. Install in the reverse order of removal.
7. Adjust the drive belt.
8. Perform the refrigerant system performance test. (See U–13 REFRIGERANT SYSTEM PERFORMANCE TEST.)

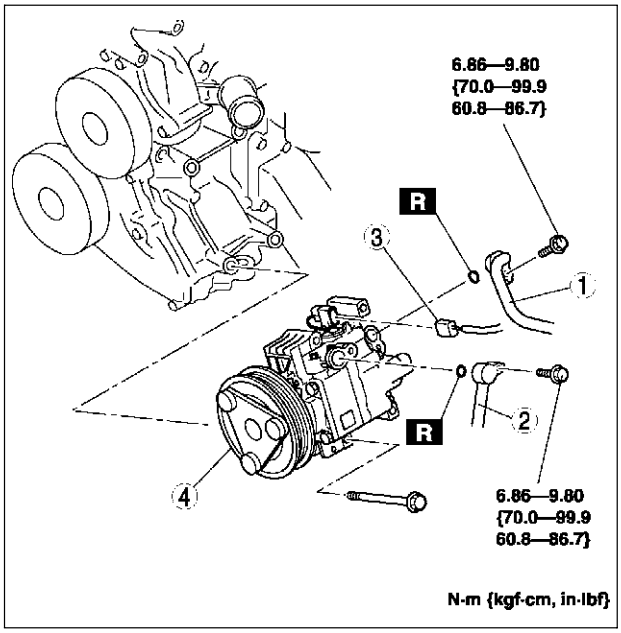

A6E8516W012

A/C Compressor Installation Note

1. Remove the following amount of compressor oil from the new A/C compressor when replacing the A/C compressor.

Compressor oil to be removed (approximate quantity)
120 ml {120 cc, 4.06 fl oz} – [compressor oil from old A/C compressor + 15 ml {15 cc, 0.5 fl oz}]

CONDENSER REMOVAL/INSTALLATION

A6E851661480W01

1. Disconnect the negative battery cable.
2. Discharge the refrigerant from the system. (See U–9 RECOVERY.) (See U–9 CHARGING.)
3. Remove the shroud panel. (See S–119 SHROUD PANEL REMOVAL/INSTALLATION.)

Caution
- **If moisture or foreign material enters the refrigeration cycle, cooling ability will be lowered and abnormal noise will occur. Always immediately plug all open fittings after removing any refrigeration cycle parts to keep moisture or foreign material out of the cycle.**

4. Remove in the order indicated in the table. Do not allow compressor oil to spill.

1	Cooler pipe No.1 (See U–28 Refrigerant Lines Removal Note) (See U–29 Refrigerant Lines Installation Note)
2	Cooler pipe No.2 (See U–28 Refrigerant Lines Removal Note) (See U–29 Refrigerant Lines Installation Note)
3	Condenser (See U–24 Condenser Installation Note)

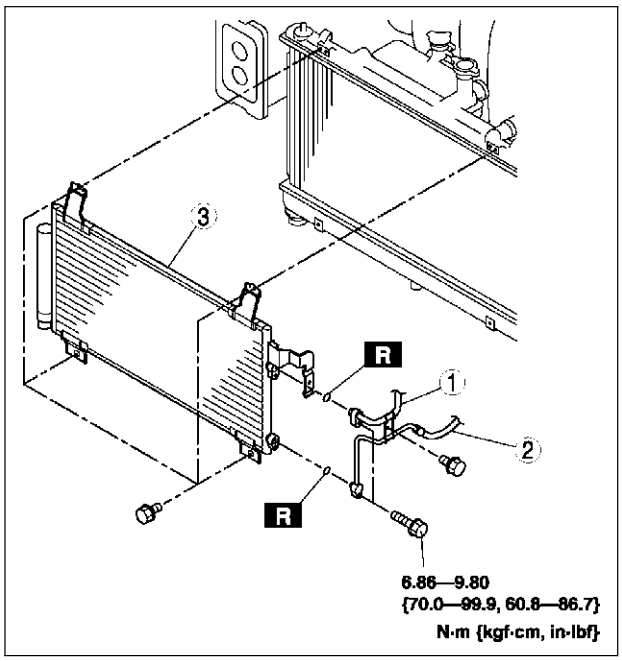

A6E8516W013

5. Install in the reverse order of removal.
6. Perform the refrigerant system performance test. (See U–13 REFRIGERANT SYSTEM PERFORMANCE TEST.)

Condenser Installation Note

1. When installing a new condenser, add a supplemental amount of ATMOS GU10 compressor oil inlet the refrigerant cycle.

Supplemental amount (approximate quantity)
20 ml {20 cc, 0.7 fl oz}

CONDENSER INSPECTION

A6E851661480W02

1. Inspect for cracks, damage, and oil leakage.
   - If any are found, replace the condenser.
2. Inspect for fins clogged by dust.
   - If any are clogged, remove the dust from the fins.
3. Inspect for bent fins.
   - If any are bent, use a flathead screwdriver to straighten them.

REFRIGERANT LINES REMOVAL/INSTALLATION

A6E851661460W01

1. Remove the battery.
2. Discharge the refrigerant from the system. (See U–9 RECOVERY.) (See U–9 CHARGING.)
3. Remove the washer tank. (L.H.D. only) (See T–58 WASHER TANK REMOVAL/INSTALLATION.)
4. Remove the air cleaner cover, air cleaner element and air cleaner case. (See F–10 INTAKE-AIR SYSTEM REMOVAL/INSTALLATION.)
5. Remove the charcoal canister.
6. Remove the No.3 engine mount. (L.H.D. only)
7. Remove the shroud panel. (See S–119 SHROUD PANEL REMOVAL/INSTALLATION.)
8. Remove the right splash shield.
9. Remove the right mud guard. (L.H.D. only)

Caution

- **If moisture or foreign material enters the refrigeration cycle, cooling ability will be lowered and abnormal noise will occur. Always immediately plug all open fittings after removing any refrigeration cycle parts to keep moisture or foreign material out of the cycle.**

10. Remove in the order indicated in the table. Do not allow compressor oil to spill.
11. Install in the reverse order of removal.

12. Perform the refrigerant system performance test. (See U–13 REFRIGERANT SYSTEM PERFORMANCE TEST.)

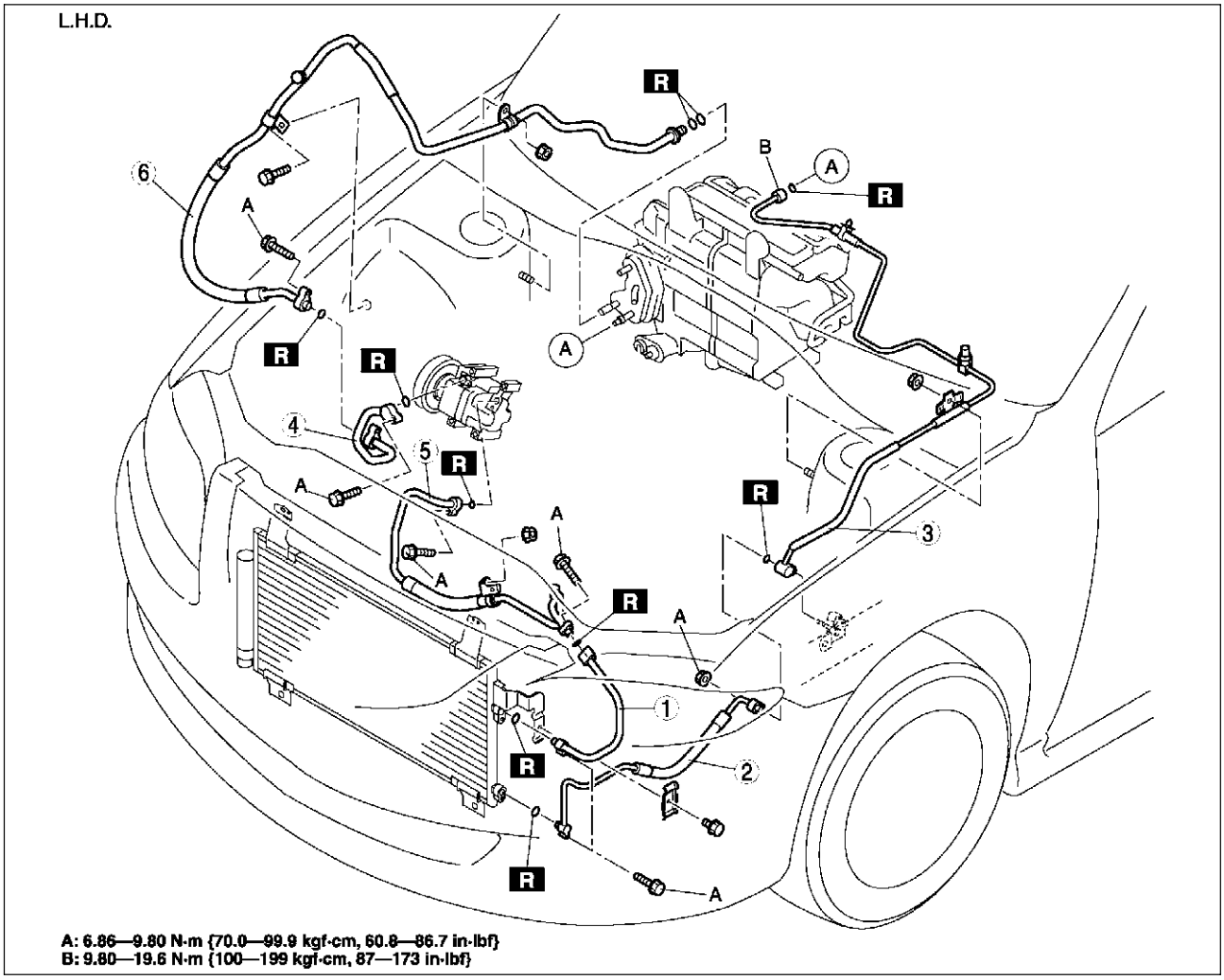

A6E8516W029

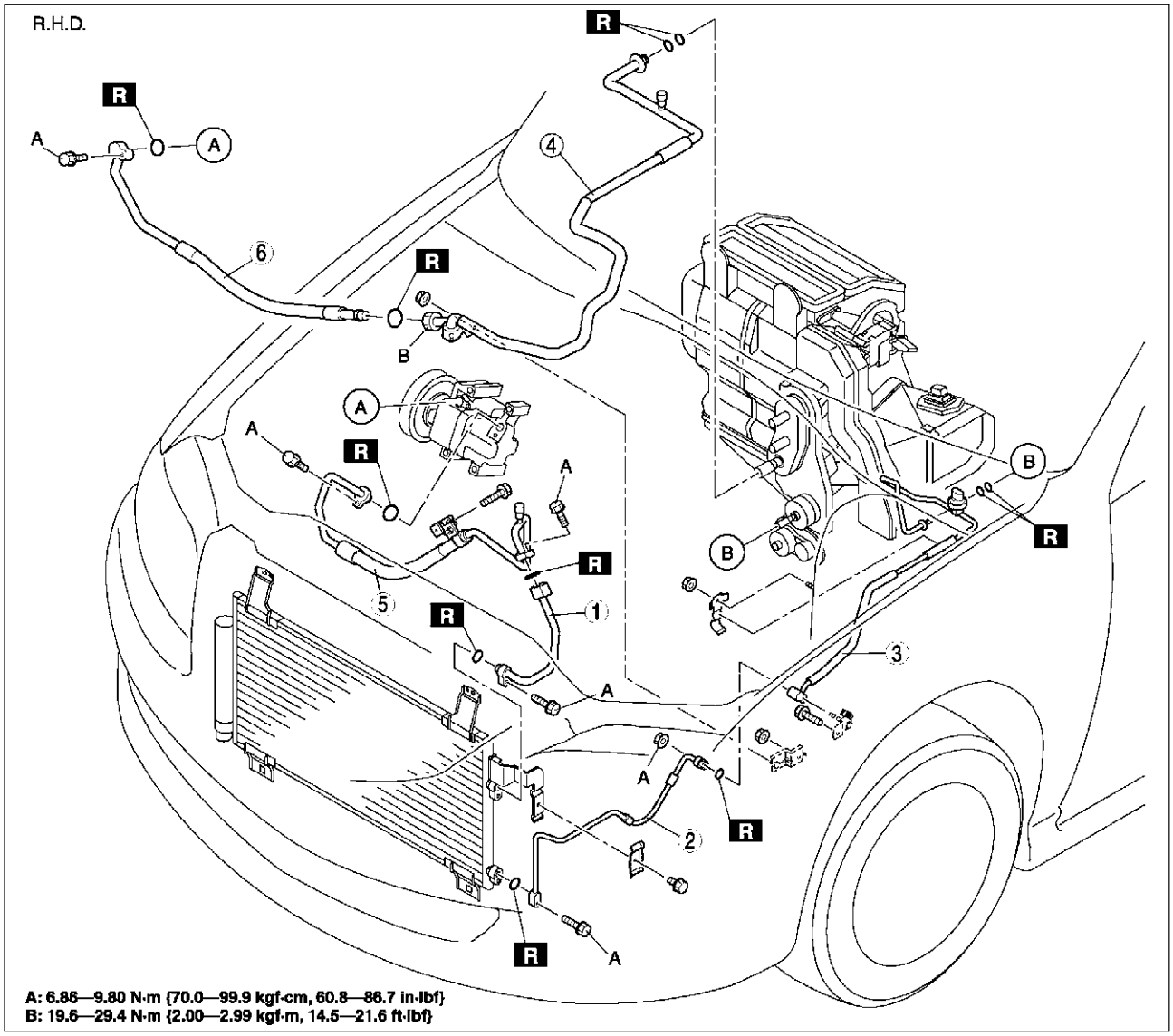

A6E8516W030

1	Cooler pipe No.1 (See U–28 Refrigerant Lines Removal Note) (See U–29 Refrigerant Lines Installation Note)
2	Cooler pipe No.2 (See U–28 Refrigerant Lines Removal Note) (See U–29 Refrigerant Lines Installation Note)
3	Cooler pipe No.3 (See U–28 Refrigerant Lines Removal Note) (See U–29 Refrigerant Lines Installation Note)

4	Cooler pipe No.4 (See U–28 Refrigerant Lines Removal Note) (See U–29 Refrigerant Lines Installation Note)
5	Cooler hose (HI) (See U–28 Refrigerant Lines Removal Note) (See U–29 Refrigerant Lines Installation Note)
6	Cooler hose (LO) (See U–28 Refrigerant Lines Removal Note) (See U–29 Refrigerant Lines Installation Note)

Refrigerant Lines Removal Note
Nut joint type
1. Loosen the nut using two spanners, then remove the cooler pipe or hose.

Block joint type
1. Disconnect the block joint type pipes by grasping female side of the block with pliers or similar tool and holding firmly, then remove the connection bolt or nut.

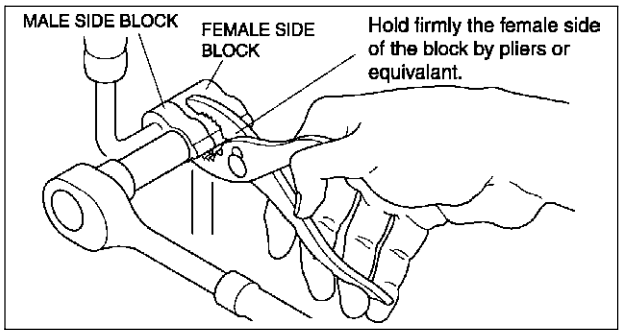

A6E8516W023

Spring-lock coupling type
1. Set the **SST**.

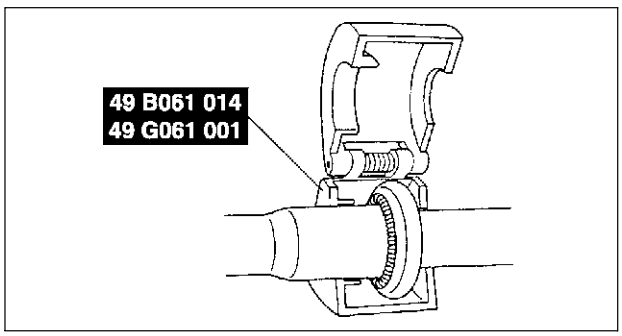

A6E8516W014

2. While looking through the inspection hole of the **SST**, insert the protruding part of the **SST** until it makes contact with the cage section.
3. Use the **SST** to disconnect the male pipe or hose from the female by pulling the male pipe or hose.

Note
- The male pipe or hose can be disconnected easily from the female pipe by pulling from the male pipe or hose while maintaining the pressure of the protruding part of the **SST**.

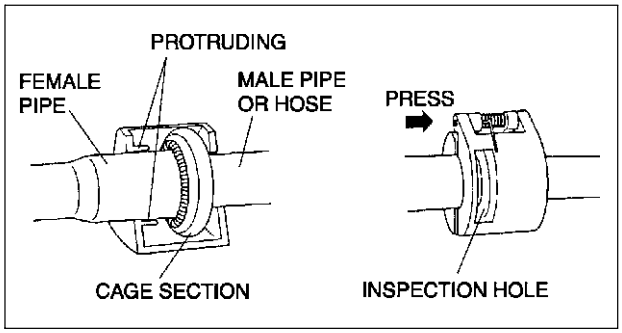

A6E8516W015

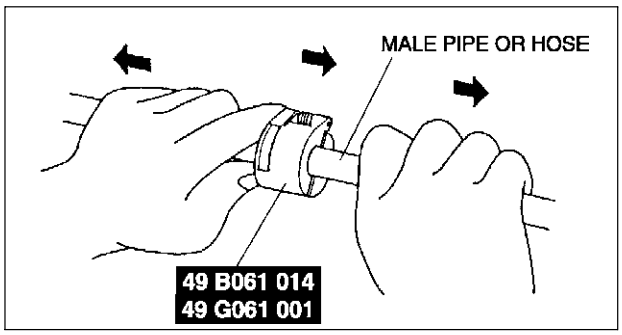

A6E8516W016

Refrigerant Lines Installation Note

1. When installing a new cooler pipe No.4 or cooler hose (LO), add a supplemental amount of ATMOS GU10 compressor oil into the refrigeration cycle.

   Supplemental amount (approximate quantity)
   5 ml {5 cc, 0.2 fl oz}: Cooler pipe No.4
   10 ml {10 cc, 0.3 fl oz}: Cooler hose (LO)

2. Apply compressor oil to the O-rings and connect the joints.
3. Tighten the joints.

Nut or block joint type

1. Tighten the nut or bolt of joint by hand.
2. Tighten the joint to the specified torque. If it is a nut joint, tighten the nut with a spanner and torque wrench.
3. Connect the block joint type pipes by grasping the female side of the block with pliers or similar tool and holding firmly, then tighten the connection bolt or nut with a torque wrench.

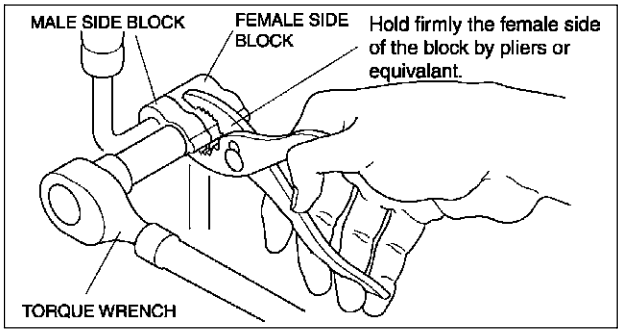

A6E8516W024

Spring-lock coupling type

1. Connect the male pipe or hose by twisting it onto female pipe until the garter spring at the male pipe or hose is over the flared end of female pipe.

   Note
   - When the male pipe or hose is replaced, the indicator ring comes out after connecting to indicate that it is locked.

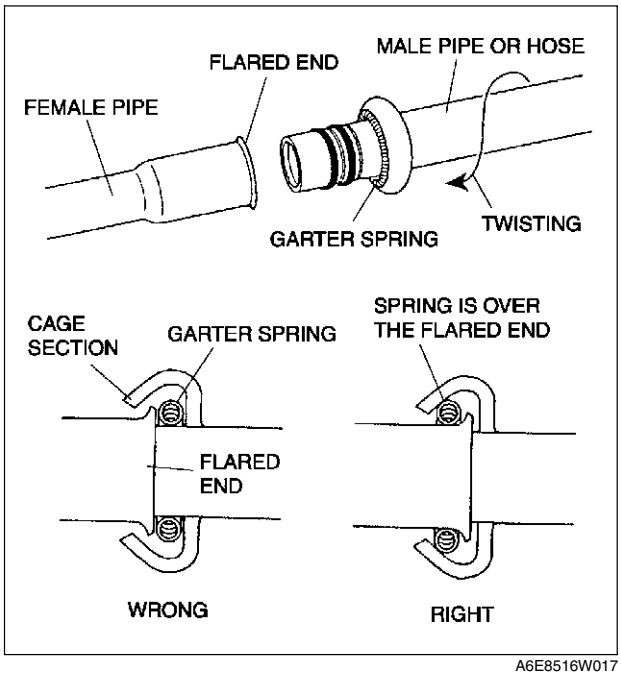

A6E8516W017

CONTROL SYSTEM

AIR INTAKE ACTUATOR REMOVAL/INSTALLATION

A6E854061060W01

1. Disconnect the negative battery cable.
2. Remove the glove compartment.
3. Remove the car navigation unit. (See T–98 CAR-NAVIGATION UNIT REMOVAL/INSTALLATION.)
4. Remove in the order indicated in the table.

1	Air intake actuator connector
2	Air intake actuator

5. Install in the reverse order of removal.

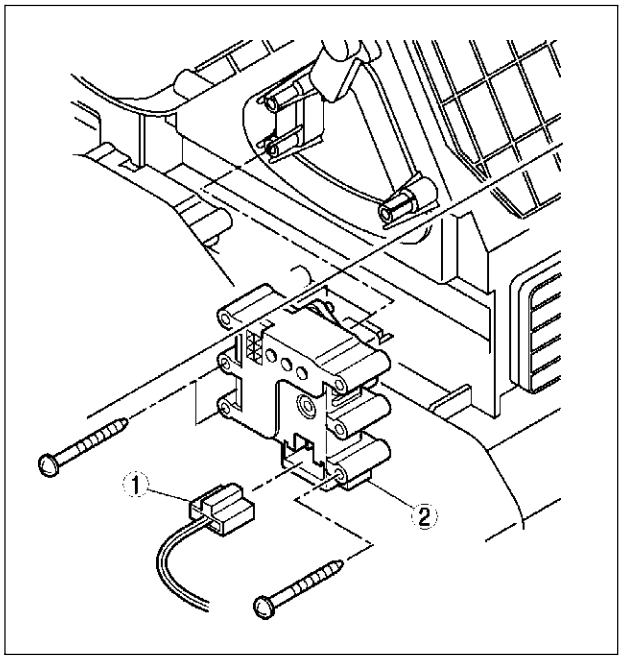

A6E8540W001

AIR INTAKE ACTUATOR INSPECTION

A6E854061060W02

1. Connect battery positive voltage to terminal D or F and ground to terminal F or D of the air intake actuator.
2. Verify that the air intake actuator operates as shown below.
   - If not as specified, replace the air intake actuator.

Connection		Movement
B+	GND	
D	F	RECIRCULATE→FRESH
F	D	FRESH→RECIRCULATE

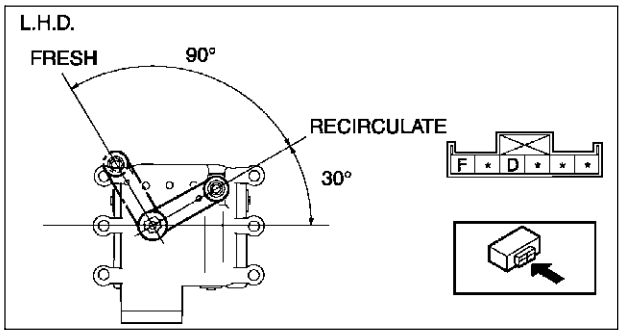

A6E8540W002

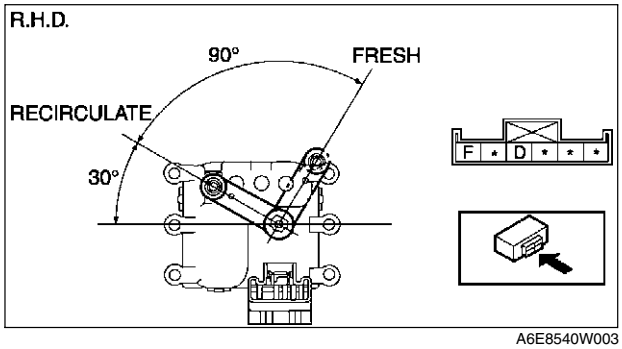

A6E8540W003

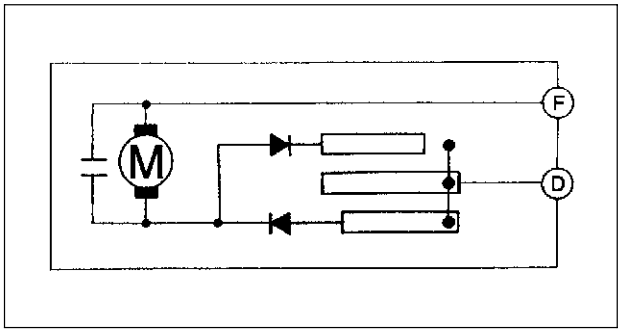

A6E8540W043

AIR MIX ACTUATOR REMOVAL/INSTALLATION

A6E854061415W01

1. Disconnect the negative battery cable.
2. Remove the glove compartment.
3. Remove the car navigation unit. (See T–98 CAR-NAVIGATION UNIT REMOVAL/INSTALLATION.)
4. Remove in the order indicated in the table.

1	Air mix actuator connector
2	Air mix actuator

5. Install in the reverse order of removal.

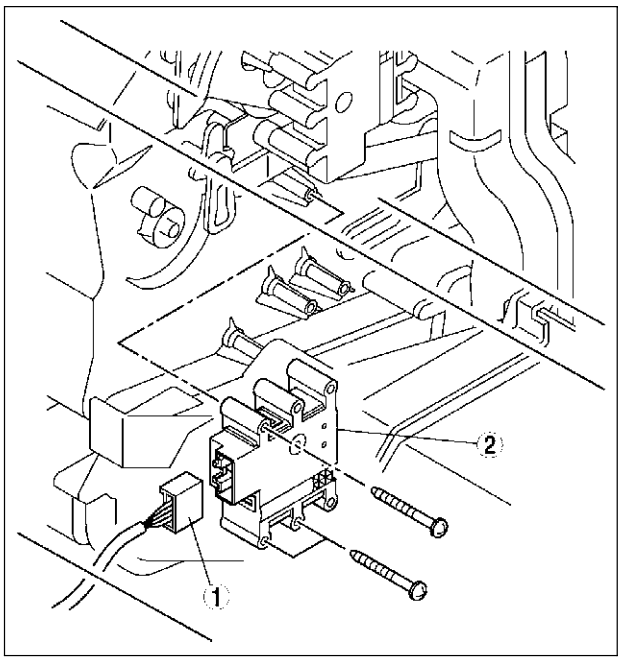

A6E8540W004

U

AIR MIX ACTUATOR INSPECTION

A6E854061415W02

1. Connect battery positive voltage to terminal D or F and ground to terminal F or D of the air mix actuator.
2. Verify that the air mix actuator operates as shown below.
   - If not as specified, replace the air mix actuator.

Connection		Movement
B+	GND	
D	F	COLD→HOT
F	D	HOT→COLD

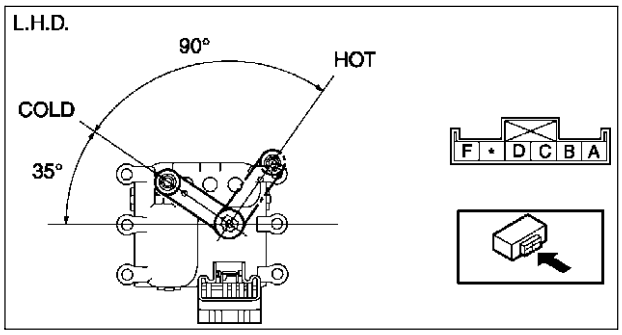

A6E8540W005

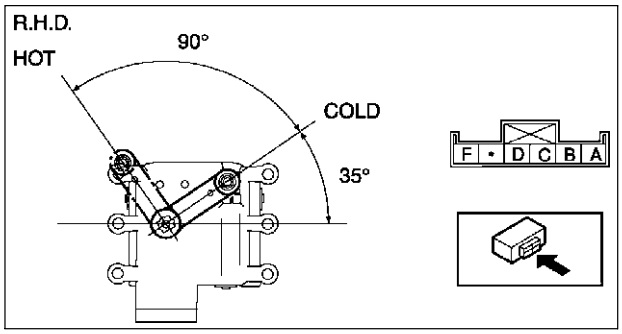

A6E8540W006

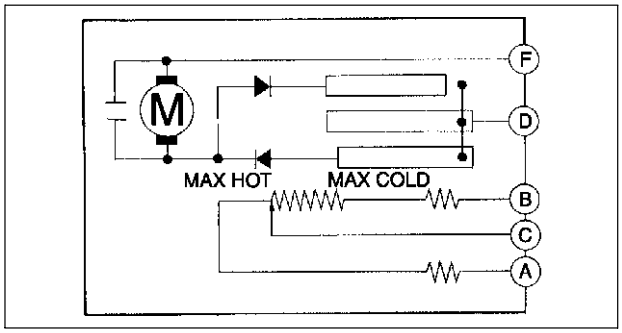

A6E8540W044

3. Verify that the resistance between the terminals of the air mix actuator are as shown in the graph.
   - If not as specified, replace the air mix actuator.

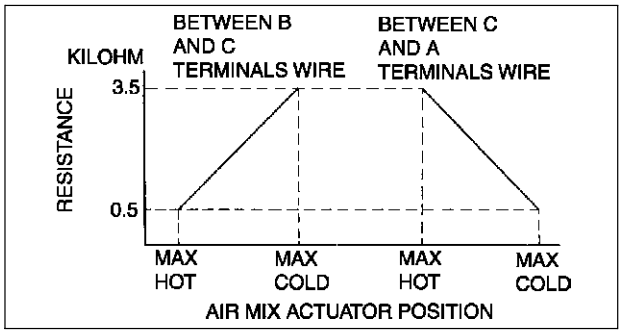

A6E8540W045

AIRFLOW MODE ACTUATOR REMOVAL/INSTALLATION

A6E854061070W01

1. Disconnect the negative battery cable.
2. Remove the glove compartment.
3. Remove the car navigation unit. (See T–98 CAR-NAVIGATION UNIT REMOVAL/INSTALLATION.)
4. Remove in the order indicated in the table.

1	Airflow mode actuator connector
2	Airflow mode actuator

5. Install in the reverse order of removal.

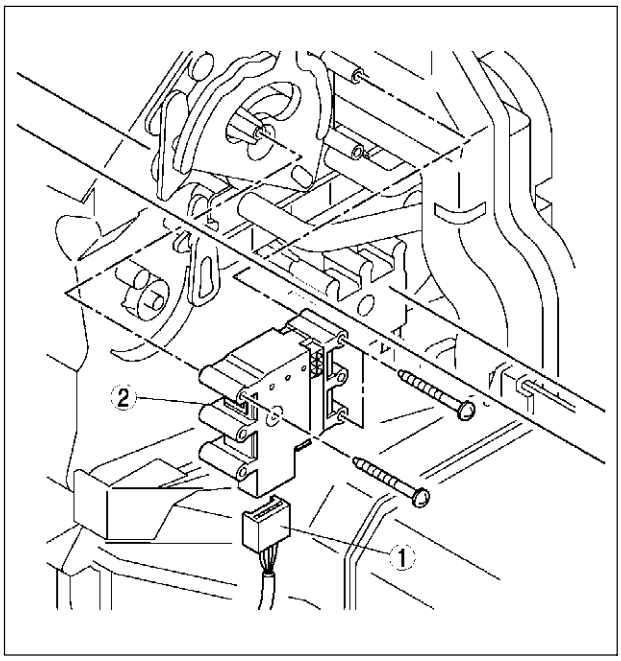

A6E8540W007

U

AIRFLOW MODE ACTUATOR INSPECTION

A6E854061070W02

1. Connect battery positive voltage to terminal D or F and ground to terminal F or D of the airflow mode actuator.
2. Verify that the airflow mode actuator operates as shown below.
   - If not as specified, replace the airflow mode actuator.

Connection		Movement
B+	GND	
D	F	DEFROSTER → VENT
F	D	VENT → DEFROSTER

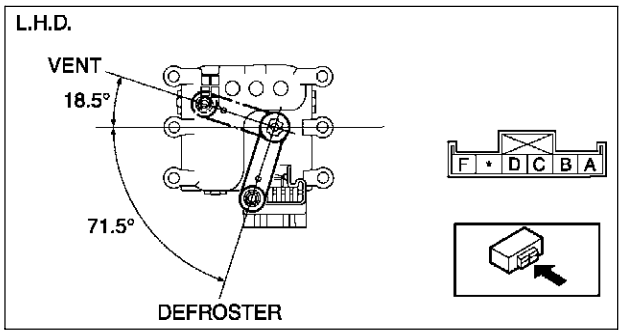

A6E8540W008

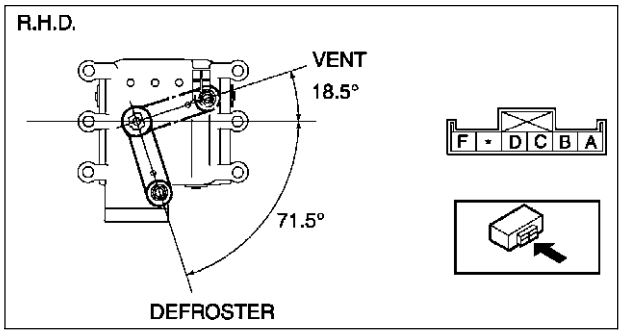

A6E8540W009

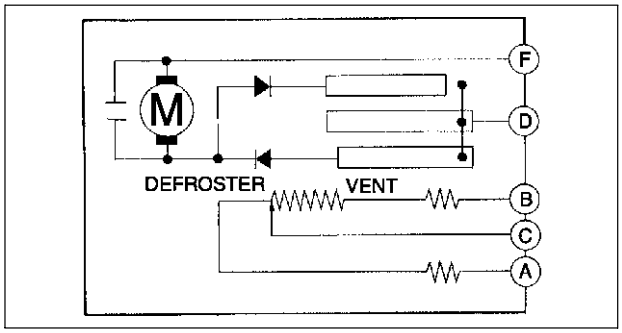

A6E8540W046

3. Verify that the resistance between the terminals of the airflow mode actuator is as shown in the graph.
   - If not as specified, replace the airflow mode actuator.

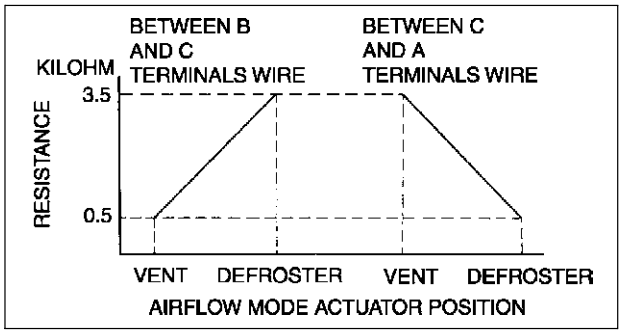

A6E8540W047

BLOWER MOTOR REMOVAL/INSTALLATION

A6E854061140W01

1. Disconnect the negative battery cable.
2. Remove in the order indicated in the table.

1	Blower motor connector
2	Blower motor

3. Install in the reverse order of removal.

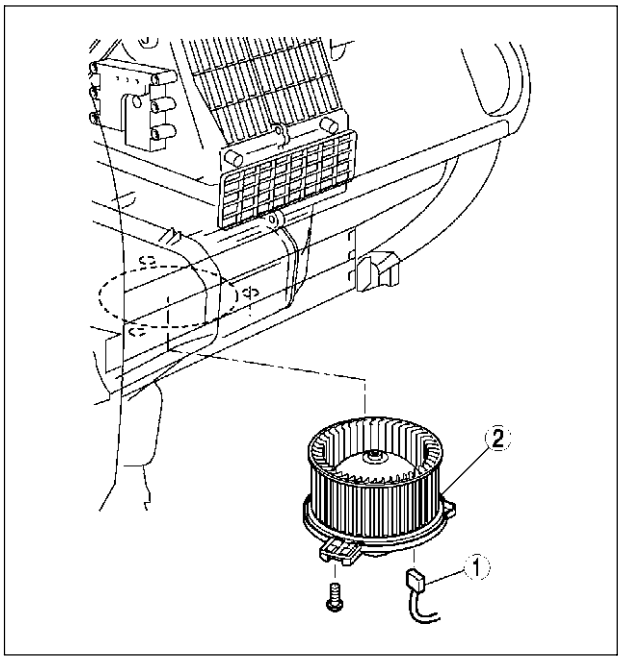

A6E8540W060

BLOWER MOTOR INSPECTION

A6E854061140W02

1. Connect battery positive voltage to terminal A and ground to terminal B of the blower motor and verify its operation.
   - If not as specified, replace the blower motor.

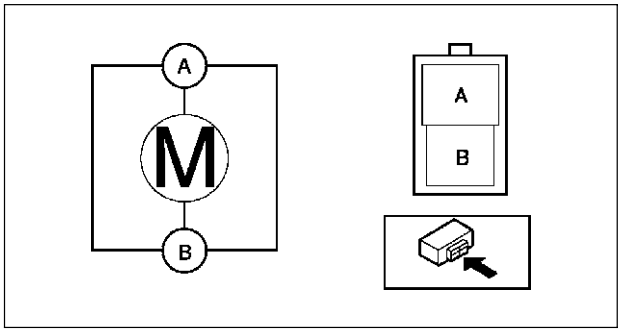

A6E8540W010

RESISTOR REMOVAL/INSTALLATION

A6E854061215W01

1. Disconnect the negative battery cable.
2. Remove the glove compartment.
3. Remove the car navigation unit. (See T–98 CAR-NAVIGATION UNIT REMOVAL/INSTALLATION.)
4. Remove in the order indicated in the table.

1	Resistor connector
2	Resistor

5. Install in the reverse order of removal.

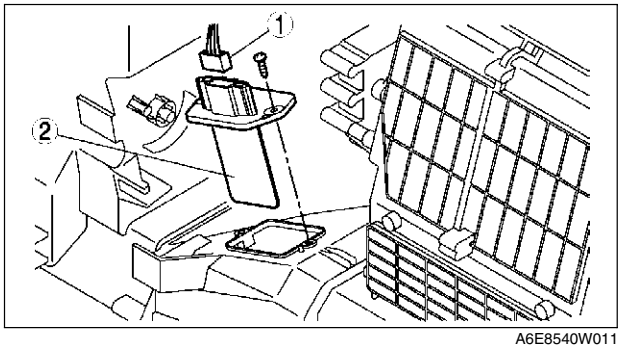

A6E8540W011

RESISTOR INSPECTION

1. Verify that the resistance between the terminals of the resistor is as shown in the table.
   - If not as specified, replace the resistor.

Terminal	Resistance (ohm)
A—D	0.21—0.23
A—B	0.60—0.68
A—C	2.29—2.62

A6E854061215W02

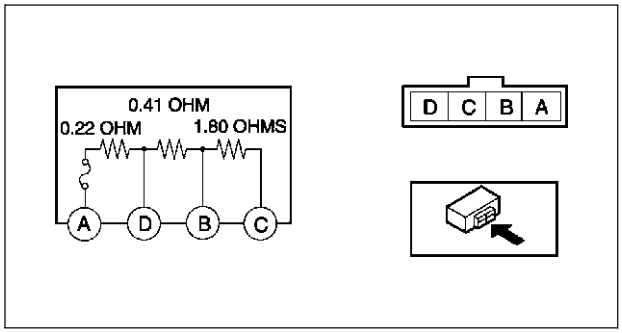

A6E8540W012

POWER MOS FET REMOVAL/INSTALLATION

A6E854061B15W01

(See U–35 RESISTOR REMOVAL/INSTALLATION.)

POWER MOS FET INSPECTION

1. Verify that the resistance between the terminals of the power MOS FET is as shown in the table.
   - If not as specified, replace the power MOS FET.

Ohmmeter lead		Resistance (kilohm)
+	–	
A	B	∞
A	E	6.9
B	A	Continuity
B	E	Continuity
E	A	6.9
E	B	∞

A6E854061B15W02

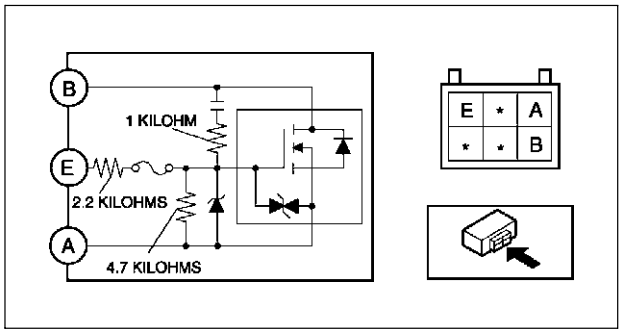

A6E8540W013

MAGNETIC CLUTCH DISASSEMBLY/ASSEMBLY

1. Disassemble in the order indicated in the table.

1	Bolt (See U–37 Bolt Removal/Installation Note)
2	Pressure plate
3	Shim
4	Snap ring (See U–37 Snap Ring Installation Note)
5	A/C compressor pulley
6	Screw (See U–37 Screw Installation Note)
7	Clamp (See U–37 Clamp Installation Note)
8	Screw (See U–37 Screw Installation Note)
9	Stator and thermal protector (See U–37 Stator and Thermal Protector Removal Note) (See U–37 Stator and Thermal Protector Installation Note)
10	A/C compressor body

2. Assemble in the reverse order of disassembly.
3. Adjust the magnetic clutch clearance. (See U–38 MAGNETIC CLUTCH ADJUSTMENT.)

A6E854061010W01

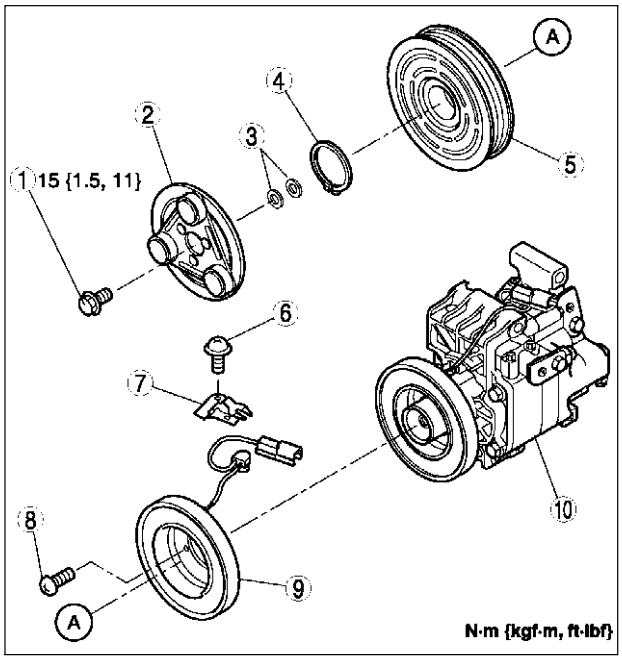

A6E8540W014

Bolt Removal/Installation Note

1. When removing or installing the bolt, hold the pressure plate in place as shown in the figure.
2. When installing a new A/C compressor body, replace the bolt.

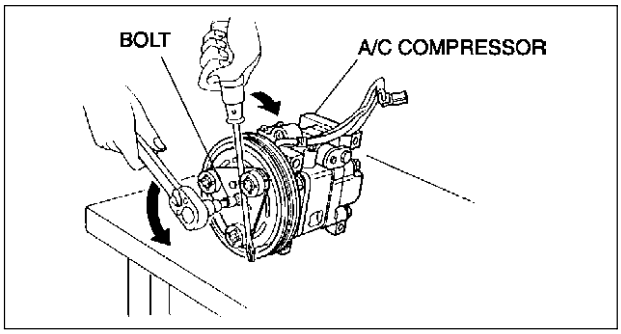

A6E8540W048

Stator and Thermal Protector Removal Note

1. After removing the stator and thermal protector, completely remove the silicone adhering to the A/C compressor side.

Stator and Thermal Protector Installation Note

1. Apply **approximately 1 g {0.04 oz}** of silicone (Shin-Etsu Silicone KE-347W or similar) to the contact surface of the thermal protector, then thoroughly install it onto the A/C compressor, leaving no gaps.

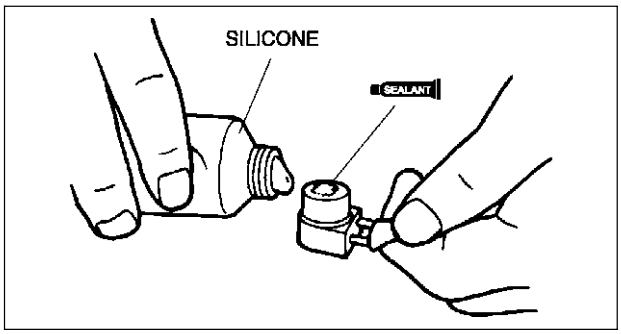

A6E8540W049

Screw Installation Note

1. When installing a new stator and thermal protector, replace the screw.

Clamp Installation Note

1. When installing a new stator and thermal protector, replace the clamp.

Snap Ring Installation Note

1. When installing a new pressure plate, A/C compressor pulley, stator, or A/C compressor body, replace the snap ring.

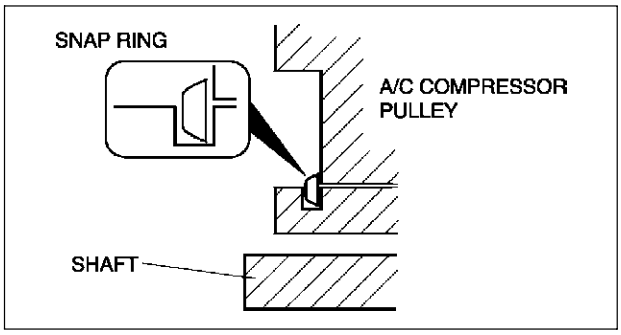

A6E8540W050

MAGNETIC CLUTCH ADJUSTMENT

1. Measure the clearance around the entire circumference between the pressure plate and A/C compressor pulley using a thickness gauge.
2. Verify that the clearance is within the specification.
   - If not within the specification, remove the pressure plate and adjust the clearance by changing the shim (**0.2 mm {0.008 in}, 0.5 mm {0.02 in}**) or the number of shims.

Clearance
0.3—0.5 mm {0.012—0.019 in}

A6E854061010W02

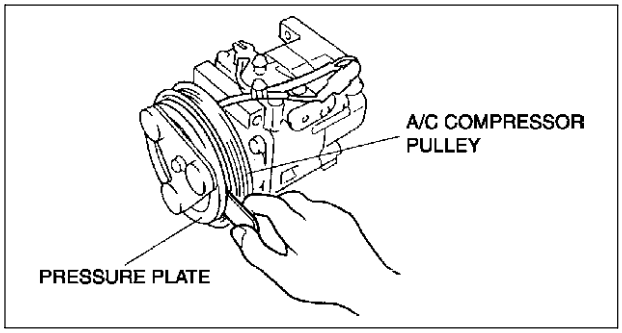

A6E8540W051

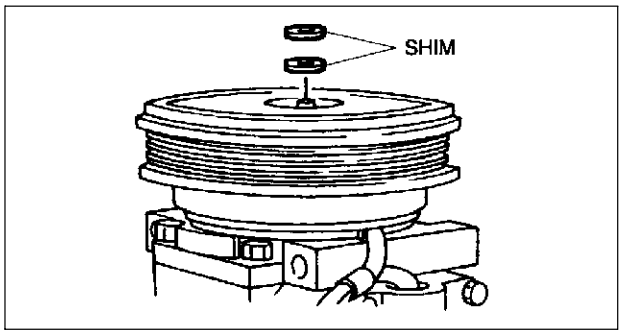

A6E8540W052

MAGNETIC CLUTCH INSPECTION

1. Connect battery positive voltage to terminal A of magnetic clutch and ground to A/C compressor body.

A6E854061010W03

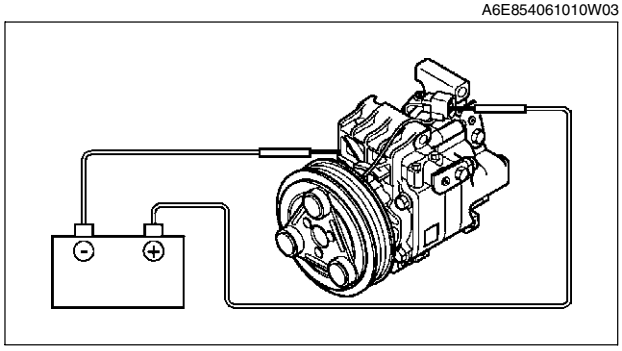

A6E8540W015

2. Verify that the magnetic clutch operates.
   - If not as specified, replace the stator and thermal protector.

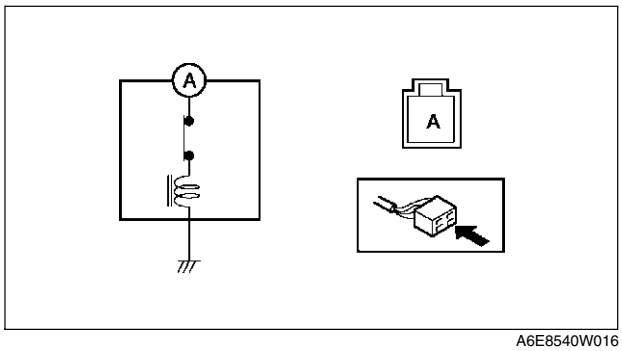

A6E8540W016

SOLAR RADIATION SENSOR REMOVAL/INSTALLATION

A6E854061751W01

1. Disconnect the negative battery cable.
2. Remove the solar radiation sensor from the dashboard using a tape-wrapped flathead screwdriver.
3. Install in the reverse order of removal.

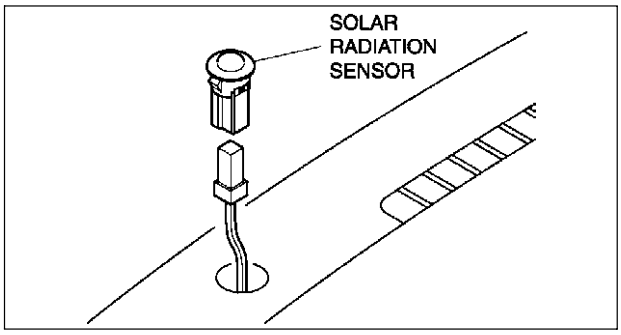

A6E8540W017

SOLAR RADIATION SENSOR INSPECTION

A6E854061751W02

1. Shine an incandescent light (**60 W**) on the solar radiation sensor from a distance of **approximately 100 mm {3.94 in}**.
2. Connect positive (+) lead to terminal A and negative (–) lead to terminal B of the solar radiation sensor.
   - If the output voltage is not **above 0.45 V**, replace the solar radiation sensor.

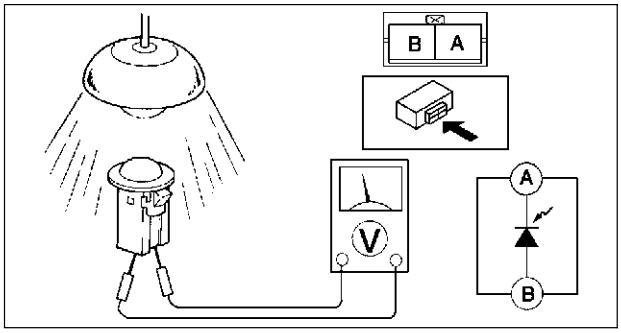

A6E8540W058

AMBIENT TEMPERATURE SENSOR REMOVAL/INSTALLATION

A6E854061764W01

1. Disconnect the negative battery cable.
2. Remove the radiator grille. (See S–50 RADIATOR GRILLE REMOVAL/INSTALLATION.)
3. Remove in the order indicated in the table.

1	Ambient tenperature sensor connector
2	Ambient temperature sensor

4. Install in the reverse order of removal.

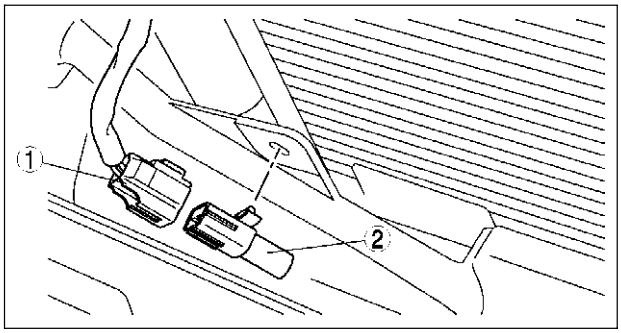

A6E8540W018

AMBIENT TEMPERATURE SENSOR INSPECTION

A6E854061764W02

1. Measure the temperature around the ambient temperature sensor.
2. Measure the resistance between terminals of the ambient temperature sensor.
   - If the resistance is not as shown in the graph, replace the ambient temperature sensor.

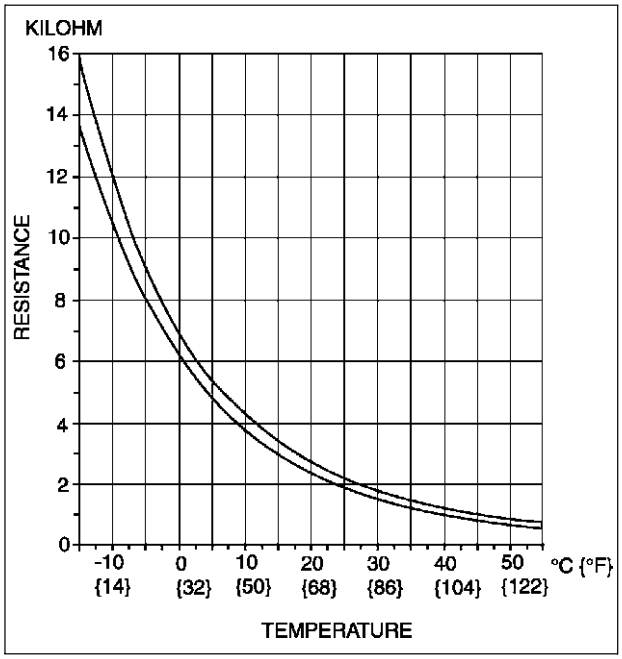

A6E8540W019

CABIN TEMPERATURE SENSOR REMOVAL/INSTALLATION

A6E854061757W01

1. Disconnect the negative battery cable.
2. Remove the lower panel. (See S–84 LOWER PANEL REMOVAL/INSTALLATION.)
3. Remove in the order indicated in the table.

1	Air hose
2	Cabin temperature sensor connector
3	Cabin temperature sensor

4. Install in the reverse order of removal.

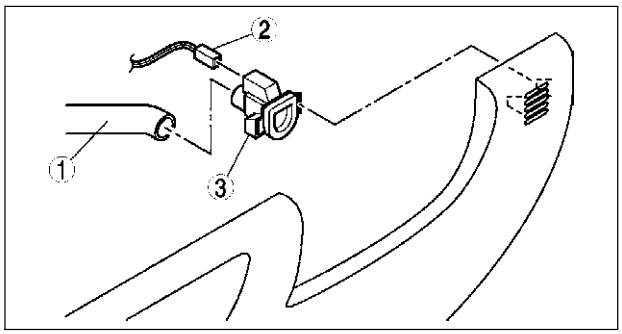

A6E8540W020

CABIN TEMPERATURE SENSOR INSPECTION

A6E854061757W02

1. Measure the temperature around the cabin temperature sensor.
2. Measure the resistance between terminals of the cabin temperature sensor.
   - If the resistance is not as shown in the graph, replace the cabin temperature sensor.

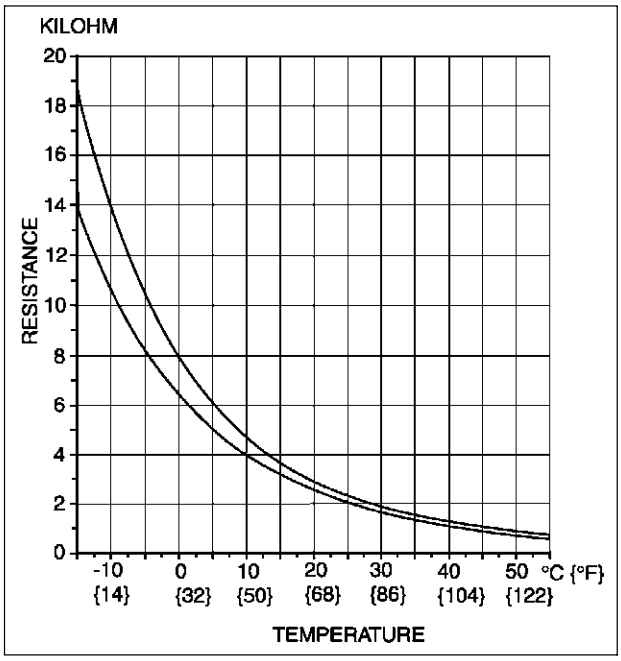

A6E8540W021

EVAPORATOR TEMPERATURE SENSOR REMOVAL/INSTALLATION

A6E854061022W01

1. Remove the evaporator temperature sensor from the A/C unit. (See U–18 A/C UNIT DISASSEMBLY/ASSEMBLY.)

EVAPORATOR TEMPERATURE SENSOR INSPECTION

A6E854061022W02

1. Turn the AUTO switch on.
2. Set the temperature control at MAX COLD (Turn the left).
3. Turn the A/C switch.
4. Set the RECIRCULATE mode.
5. Close all doors and windows.
6. Wait for **5 minutes**.
7. Remove the glove compartment.
8. Disconnect the evaporator temperature sensor.
9. Measure the temperature at the blower inlet.
10. Measure the resistance between terminals of the evaporator temperature sensor.
    - If the resistance is not as shown in the graph, replace the evaporator temperature sensor.

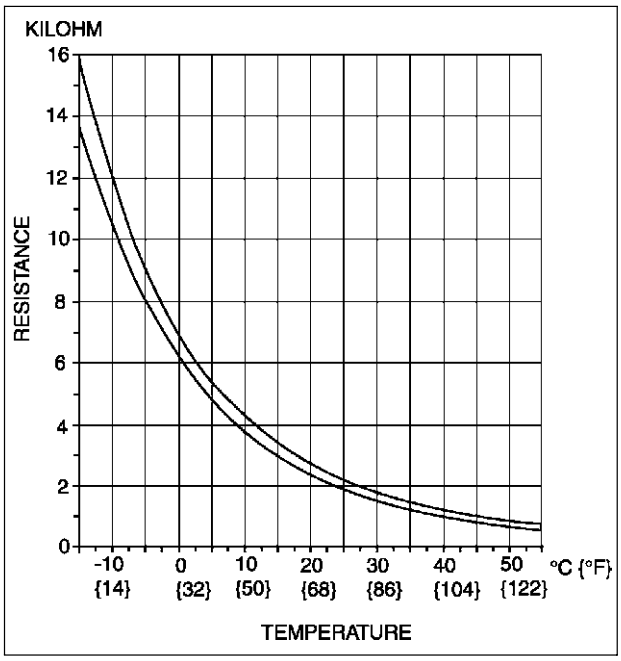

A6E8540W019

WATER TEMPERATURE SENSOR REMOVAL/INSTALLATION

A6E854061752W01

1. Disconnect the negative battery cable.
2. Remove the dashboard. (See S–82 DASHBOARD REMOVAL/INSTALLATION.)
3. Remove in the order indicated in the table.

1	Air hose
2	Duct (3)
3	Plate spring
4	Water temperature sensor

4. Install in the reverse order of removal.

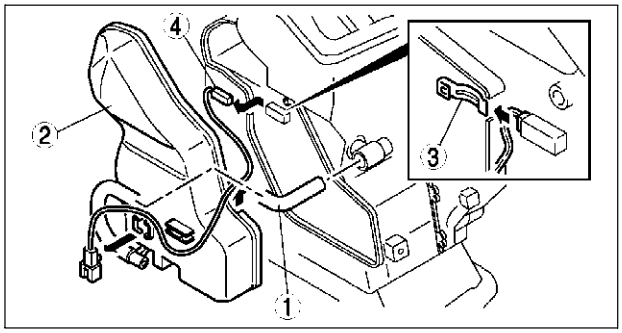

A6E8540W023

WATER TEMPERATURE SENSOR INSPECTION

A6E854061752W02

1. Measure the temperature around the water temperature sensor.
2. Measure the resistance between terminals of the water temperature sensor.
   - If the resistance is not as shown in the graph, replace the water temperature sensor.

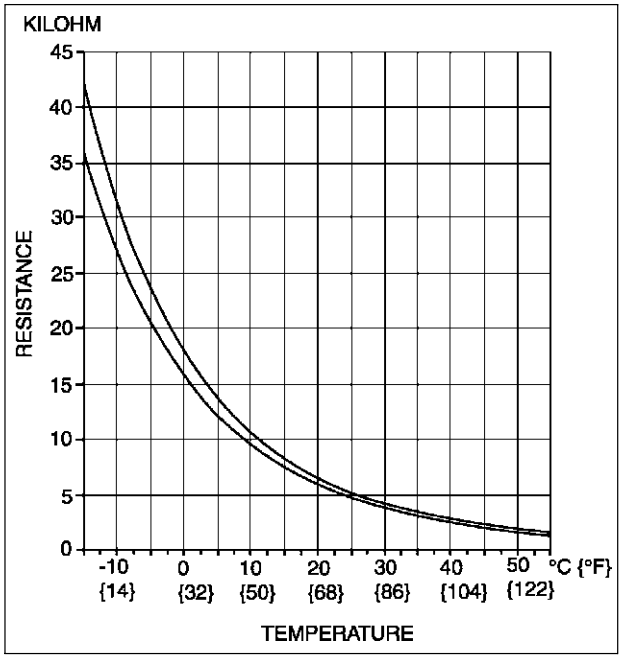

A6E8540W024

REFRIGERANT PRESSURE SWITCH REMOVAL/INSTALLATION

A6E854061503W01

1. Remove the battery.
2. Discharge the refrigerant from the system. (See U–9 RECOVERY.) (See U–9 CHARGING.)
3. Loosen the refrigerant pressure switch using two spanners.
4. Remove in the order indicated in the table.

1	Refrigerant pressure switch connector
2	Refrigerant pressure switch (See U–42 Refrigerant Pressure Switch Installation Note)

5. Install in the reverse order of removal.

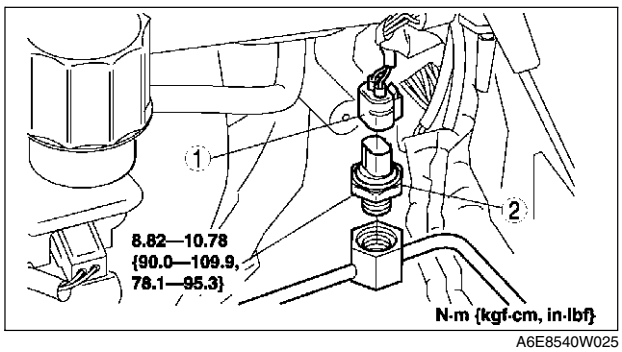

A6E8540W025

Refrigerant Pressure Switch Installation Note

1. Apply compressor oil to O-ring and connect the joint.

REFRIGERANT PRESSURE SWITCH INSPECTION

A6E854061503W02

1. Install the **SST** (gas charging set).
2. Disconnect the refrigerant pressure switch connector.
3. Verify the high-pressure side reading of the **SST** (manifold gauge) and continuity between the terminals of the refrigerant pressure switch.
   - If not as specified, replace the refrigerant pressure switch.

Triple-pressure Type

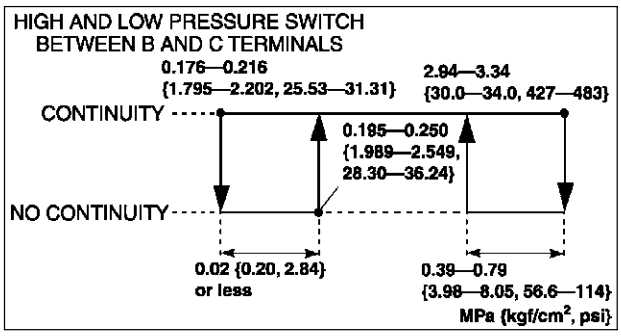

A6E8540W053

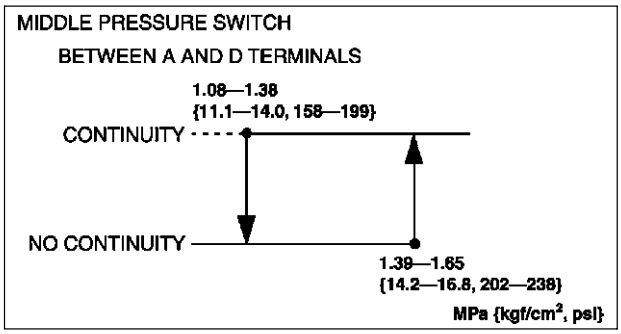

A6E8540W054

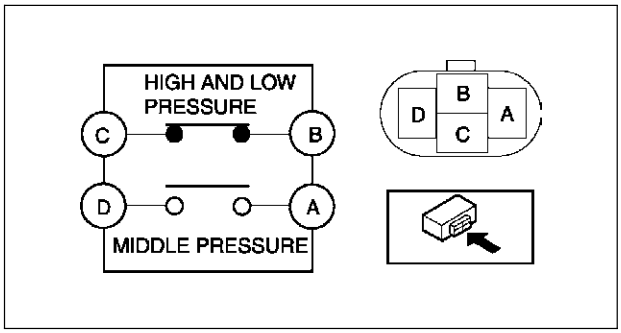

A6E8540W026

Dual-pressure Type

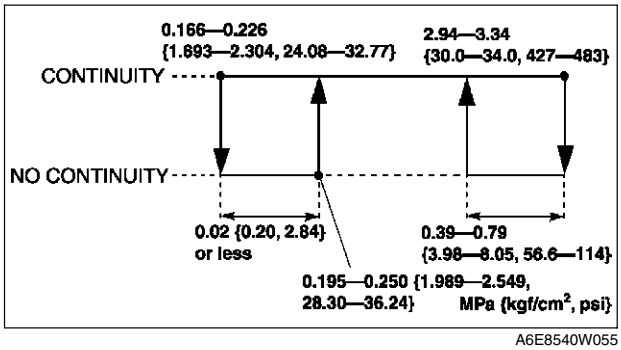

A6E8540W055

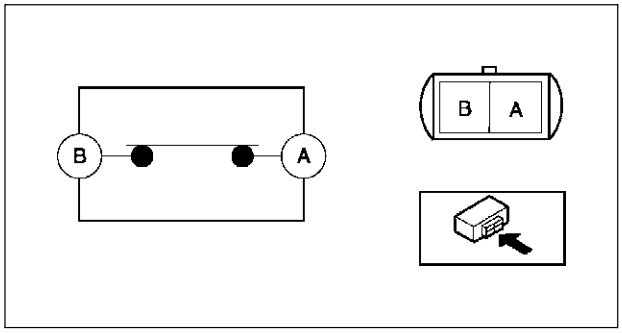

A6E8540W027

CLIMATE CONTROL UNIT REMOVAL

A6E854061190W03

1. Disconnect the negative battery cable.
2. Disconnect the air mix and airflow mode wires from each wire clamp and link. (Manual air conditioner)
3. Remove the center panel. (See T–96 CENTER PANEL MODULE REMOVAL/INSTALLATION.)
4. Remove the screws and climate control unit. (Full-auto air conditioner)
5. Release the hook and pull the climate control unit toward you. (Manual air conditioner)
6. Disconnect the climate control unit connectors and remove the climate control unit. (Manual air conditioner)

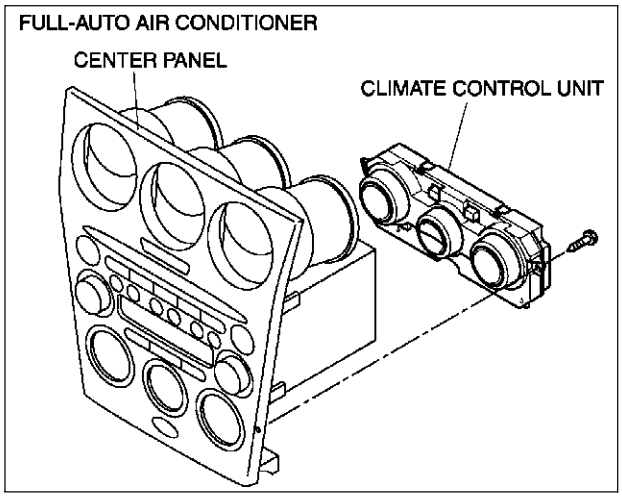

A6E8540W028

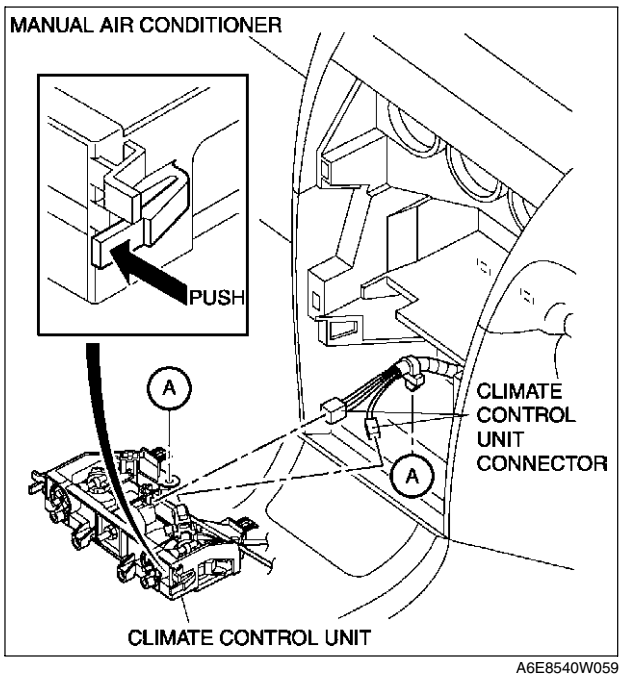

A6E8540W059

CLIMATE CONTROL UNIT INSTALLATION

1. Pass each wire through the following routes then connect to A/C unit. (Manual air conditioner)
2. Connect the climate control unit connectors. (Manual air conditioner)
3. Install the climate control unit to the center panel. (Full-auto air conditioner)
4. Install the center panel.
5. Adjust the climate control unit wires. (Manual air conditioner) (See U–46 CLIMATE CONTROL UNIT WIRE ADJUSTMENT.)
6. Connect the negative battery cable.

A6E854061190W04

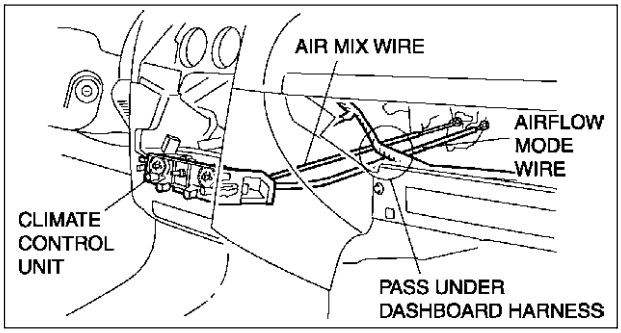

A6E8540W029

CLIMATE CONTROL UNIT DISASSEMBLY/ASSEMBLY

1. Disassemble in the order indicated in the table.

1	Illumination bulb
2	Body

A6E854061190W01

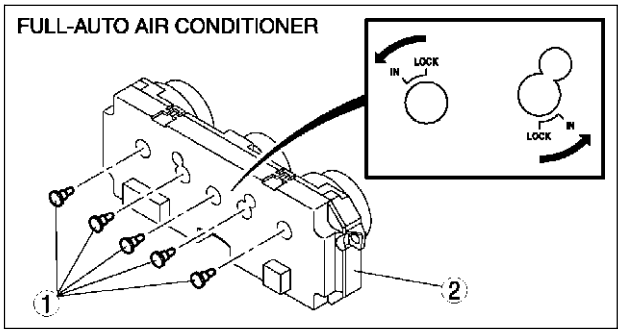

A6E8540W061

1	Fan switch
2	Air mix wire (See U–46 Wire Disassembly Note) (See U–46 Wire Assembly Note)
3	Airflow mode wire (See U–46 Wire Disassembly Note) (See U–46 Wire Assembly Note)
4	Body

2. Assemble in the reverse order of disassembly.

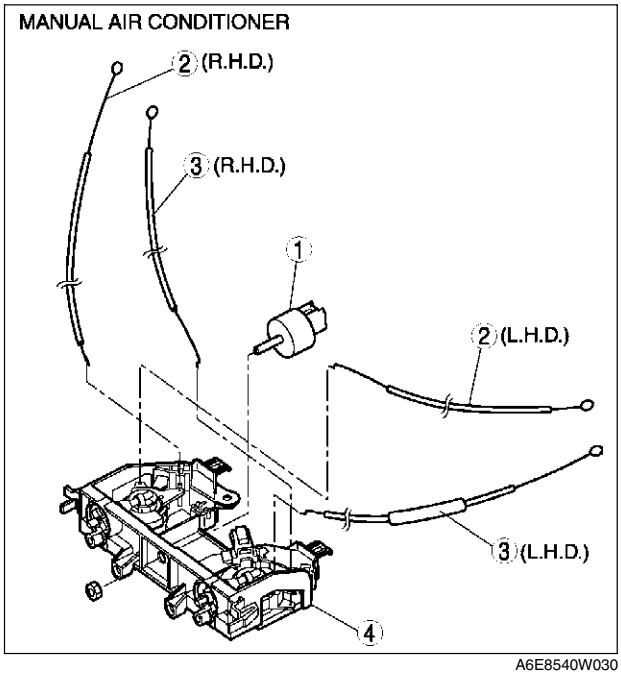

A6E8540W030

U

Wire Disassembly Note

1. Disassemble the wires in the shown in the figure.

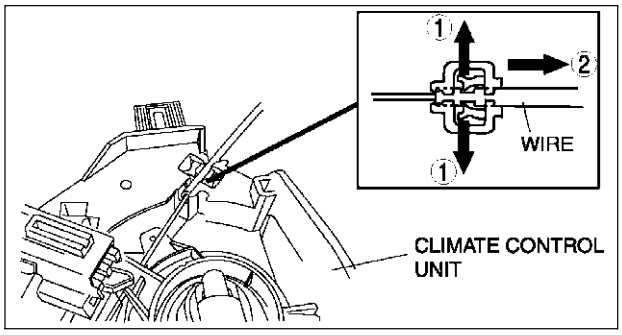

A6E8540W031

Wire Assembly Note

1. Assemble the wires to the position as shown in the figure.

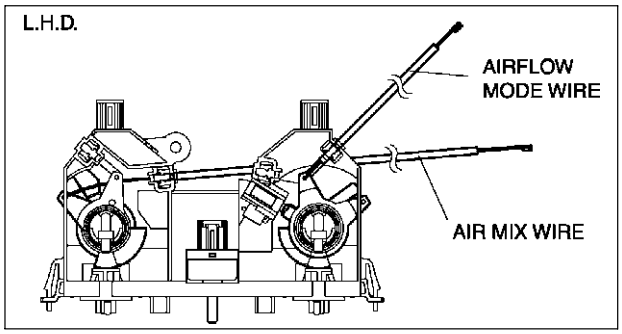

A6E8540W032

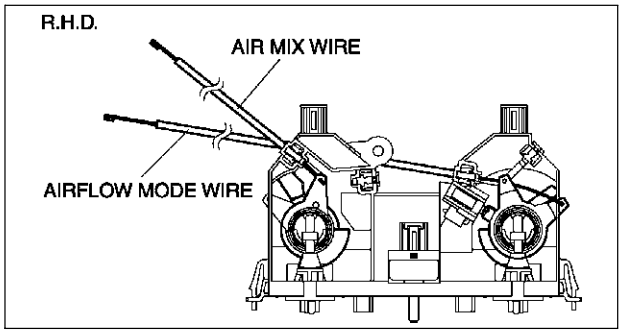

A6E8540W033

CLIMATE CONTROL UNIT WIRE ADJUSTMENT

A6E854061190W05

Air Mix Wire

1. Set the temperature control dial at max cold.
2. Set the air mix link to max cold in the direction shown by the arrow and insert a screwdriver at the set hole.
3. Connect the air mix wire to air mix link.
4. Clamp the air mix wire to wire clamp.
5. Verify that the temperature control dial moves its full stroke.

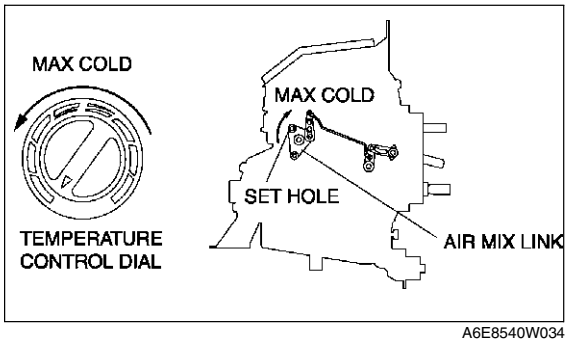

A6E8540W034

Airflow Mode Wire

1. Set the airflow mode control dial at defroster.

2. Set the airflow mode main link to defroster in the direction shown by the arrow and insert a screwdriver at the set hole.
3. Connect the airflow mode wire to airflow mode main link.
4. Clamp the airflow mode wire to wire clamp.
5. Verify that the airflow mode control dial moves its full stroke.

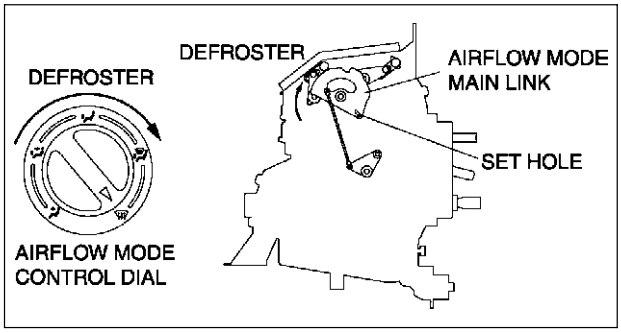

A6E8540W035

CLIMATE CONTROL UNIT INSPECTION

A6E854061190W02

Full-auto Air Conditioner

1. Connect the all center panel connectors.
2. Turn the ignition switch to ON position.
3. Measure the voltage at each climate control unit terminal and refer to the terminal voltage list.
   - If not as specified, inspect the parts listed under “Action” and the related wiring harness.
     — If there is any malfunction, replace the climate control unit.

Terminal Voltage List (Reference)

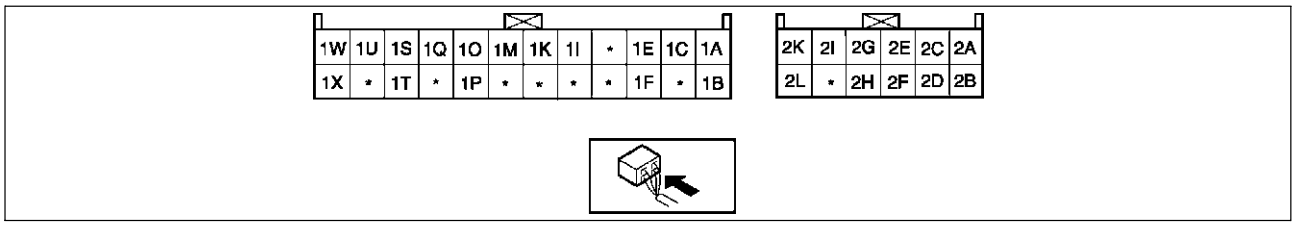

A6E8540W038

Terminal	Signal	Connected to	Test condition	Voltage (V)	Action
1A	Blower motor feedback signal	• Blower motor • Power MOS FET	Fan switch is OFF	12	1. Inspect for continuity or short circuit (Climate control unit—blower motor: 1A—B) (Climate control unit—power MOS FET: 1A—B, 1C—E) (Blower motor—blower relay: A—C) (Blower relay—fuse: D—BLOWER 40 A fuse) 2. Inspect for continuity (Power MOS FET—ground: A—GND) (Blower relay—ground: A—GND) 3. Inspect power MOS FET 4. Inspect blower motor 5. Inspect blower relay 6. Inspect BLOWER 40 A fuse 7. Replace power MOS FET
			Fan switch is at manual LO	7.8	
			Fan switch is at manual HI	0.2	
1B	+5 V	• Air mix actuator • Airflow mode actuator • Solar radiation sensor	Ignition switch at ON position	5.0	• Inspect for short circuit (Climate control unit— air mix actuator, airflow mode actuator, solar radiation sensor: 1B—B, B, A) • Inspect air mix actuator • Inspect airflow mode actuator • Inspect solar radiation sensor • Inspect terminal voltage of climate control unit connector (2H, 2L)
			Ignition switch at LOCK position	Below 1.0	• Replace climate control unit

U

Terminal	Signal	Connected to	Test condition	Voltage (V)	Action
1C	Blower motor control signal	Power MOS FET	Fan switch is OFF	Below 1.0	• Inspect terminal voltage of climate control unit (1A)
			Fan switch is at manual LO	4.1	
			Fan switch is at manual HI	7.9	
1D	—	—	—	—	—
1E	Rear window defroster SW signal	Rear window defroster relay	Rear window defroster switch is off	12	• Inspect for continuity or short circuit (Climate control unit—rear window defroster relay: 1E—E) • Inspect rear window defroster relay
			Rear window defroster switch is on	Below 1.0	• Inspect terminal voltage of climate control unit (1H, 1L) • Inspect audio switch panel
1F	On-board diagnostic signal	A/C check connector	Terminal A of A/C check connector is shorted.	Below 1.0	• Inspect for continuity (Climate control unit—A/C check connector: 1F—A)
			Other	5.4	• Inspect short circuit (Climate control unit—A/C check connector: 1F—A) • Inspect terminal voltage of climate control unit (2H, 2L)
1G	—	—	—	—	—
1H	—	—	—	—	—
1I	GND	• Cabin temperature sensor • Evaporator temperature sensor • Ambient temperature sensor • Water temperature sensor • Air mix actuator • Airflow mode actuator	Under any condition	Below 1.0	• Inspect terminal voltage of climate control unit (2L)
1J	—	—	—	—	—
1K	Ambient temperature sensor input	Ambient temperature sensor	Depends on temperature surrounding sensor	See Figure 2	• Inspect for continuity (Climate control unit—ambient temperature sensor: 1K—B, 1I—A) • Inspect for short circuit (Climate control unit—ambient temperature sensor: 1K—B) • Inspect ambient temperature sensor • Inspect terminal voltage of climate control unit (2H, 2L)
1L	—	—	—	—	—
1M	Cabin temperature sensor input	Cabin temperature sensor	Depends on temperature surrounding sensor	See Figure 3	• Inspect for continuity (Climate control unit— cabin temperature sensor: 1M—B, 1I—A) • Inspect for short circuit (Climate control unit— cabin temperature sensor: 1M—B) • Inspect cabin temperature sensor • Inspect terminal voltage of climate control unit (2H, 2L)
1N	—	—	—	—	—

Terminal	Signal	Connected to	Test condition	Voltage (V)	Action
1O	Water temperature sensor input	Water temperature sensor	Depends on temperature surrounding sensor	See Figure 4	• Inspect for continuity (Climate control unit—water temperature sensor: 1O—A, 1I—B) • Inspect for short circuit (Climate control unit—water temperature sensor: 1O—A) • Inspect water temperature sensor • Inspect terminal voltage of climate control unit (2H, 2L)
1P	A/C	Refrigerant pressure switch	Fan switch at OFF	12	• Inspect for continuity or short circuit (Climate control unit—refrigerant pressure switch: 1P—A (Dual-pressure type), 1P—C (Triple-pressure type)) (Refrigerant pressure switch—PCM: B—1AC) • Inspect refrigerant pressure switch • Inspect PCM terminal voltage (1AC) (See F–45 PCM INSPECTION)
			Fan switch at 1st position, A/C switch ON	Below 1.0	• Inspect terminal voltage of climate control unit (2H, 2L)
1Q	Evaporator temperature sensor input signal	Evaporator temperature sensor	Depends on temperature surrounding sensor	See Figure 1	• Inspect for continuity (Climate control unit—evaporator temperature sensor: 1Q—A, 1I—B) • Inspect for short circuit (Climate control unit—evaporator temperature sensor: 1Q—A) • Inspect evaporator temperature sensor • Inspect terminal voltage of climate control unit (2H, 2L)
1R	—	—	—	—	—
1S	Solar radiation sensor input	Solar radiation sensor	Incandescent light (**60W**) shining on solar radiation sensor from distance of **approx. 100mm {3.9 in}**	4.0	• Inspect for continuity or short circuit (Climate control unit—solar radiation sensor: 1S—B, 1B—A) • Inspect terminal voltage of climate control unit (1B) • Inspect solar radiation sensor
			Light to solar radiation sensor block	Below 1.0	
1T	GND	Ground	Under any condition	Below 1.0	• Inspect for continuity (Climate control unit—ground: 1T—GND) • Inspect center panel
1U	Potentiometer signal	Air mix actuator	Set temperature at MAX COLD	0.6	• Inspect for continuity or short circuit (Climate control unit—air mix actuator: 1U—C) • Inspect air mix actuator • Inspect terminal voltage of climate control unit (1B)
			Set temperature at MAX HOT	4.3	
1V	—	—	—	—	—

U

Terminal	Signal	Connected to	Test condition	Voltage (V)	Action
1W	Potentiometer signal	Airflow mode actuator	VENT mode	4.3	• Inspect for continuity or short circuit (Climate control unit—airflow mode actuator: 1W—C) • Inspect airflow mode actuator • Inspect terminal voltage of climate control unit (1B)
			BI-LEVEL mode	3.3	
			HEAT mode	2.3	
			HEAT/DEF mode	1.5	
			DEFROSTER mode	0.6	
1X	Hazard warning SW signal	Hazard warning switch	Hazard warning switch is off	12	• Inspect for continuity or short circuit (Climate control unit—flasher unit: 1X—H) • Inspect flasher unit
			Hazard warning switch is on	Below 1.0	• Inspect terminal voltage of climate control unit (1T) • Inspect center panel
2A	Panel light control signal	Panel light control switch	Headlight switch ON and panel light control switch at max. illumination	0.2	• Inspect for continuity (Climate control unit— panel light control switch: 2A—C) (Panel light control switch—ground: C—GND) • Inspect panel light control switch
			Headlight switch ON and panel light control switch at min. illumination	10.2	• Inspect for short circuit (Climate control unit— panel light control switch: 2A—C)
2B	TNS signal	TNS relay	Headlight switch OFF	Below 1.0	• Inspect for short circuit (Climate control unit—TNS relay: 2B—D) • Inspect TNS relay • Inspect headlight switch
			Headlight switch ON	12	• Inspect for continuity or short circuit (Climate control unit—TNS relay: 2B—D) • Inspect TNS relay • Inspect headlight switch
2C	Motor drive signal	Air mix actuator	Moving to COLD	12	• Inspect for continuity or short circuit (Climate control unit—air mix actuator: 2D—D, 2C—F) • Inspect air mix actuator
			Moving to HOT	Below 1.0	
2D	Motor drive signal	Air mix actuator	Moving to HOT	12	• Inspect for continuity or short circuit (Climate control unit—air mix actuator: 2C—F, 2D—D) • Inspect air mix actuator
			Moving to COLD	Below 1.0	
2E	Motor drive signal	Airflow mode actuator	Moving to DEFROSTER	12	• Inspect for continuity or short circuit (Climate control unit—airflow mode actuator: 2E—F, 2G—D) • Inspect airflow mode actuator
			Moving to VENT	Below 1.0	
2F	Backup power supply	ROOM 15 A fuse	Under any condition	B+	• Inspect for continuity or short circuit (Climate control unit—fuse: 2F— ROOM 15 A fuse) • Inspect ROOM 15 A fuse
2G	Motor drive signal	Airflow mode actuator	Moving to VENT	12	• Inspect for continuity or short circuit (Climate control unit—airflow mode actuator: 2G—D, 2E—F) • Inspect airflow mode actuator
			Moving to DEFROSTER	Below 1.0	

Terminal	Signal	Connected to	Test condition	Voltage (V)	Action
2H	IG2	A/C 15 A fuse	Ignition switch at ON position	B+	• Inspect for continuity or short circuit (Climate control unit—fuse: 2H—A/C 15 A fuse) • Inspect A/C 15 A fuse
			Ignition switch at LOCK position	Below 1.0	• Inspect for short circuit (Climate control unit—fuse: 2H—A/C 15 A fuse)
2I	Motor drive signal	Air intake actuator	Moving to RECIRCULATE	12	• Inspect for continuity or short circuit (Climate control unit—air intake actuator: 2I—F, 2K—D) • Inspect air intake actuator
			Moving to FRESH	Below 1.0	
2J	—	—	—	—	—
2K	Motor drive signal	Air intake actuator	Moving to FRESH	12	• Inspect for continuity or short circuit (Climate control unit—air intake actuator: 2K—D, 2I—F) • Inspect air intake actuator
			Moving to RECIRCULATE	Below 1.0	
2L	GND	Ground	Under any condition	Below 1.0	• Inspect for continuity (Climate control unit—ground: 2L—GND)

Figure 1 (Evaporator temperature sensor)

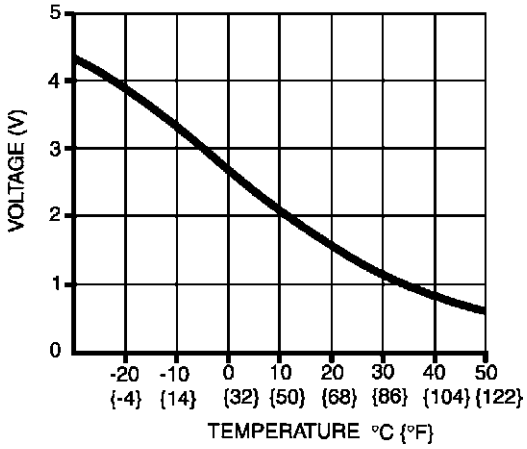

Figure 2 (Ambient temperature sensor)

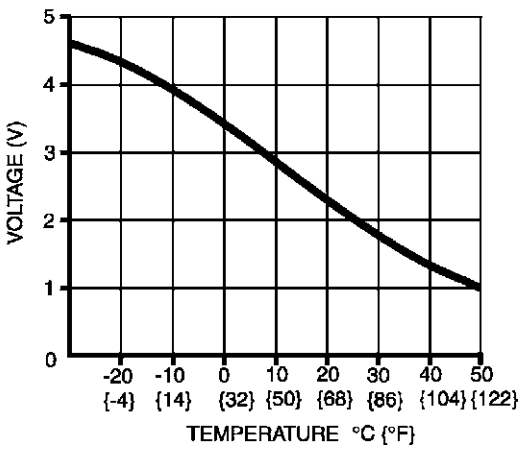

Figure 3 (Cabin temperature sensor)

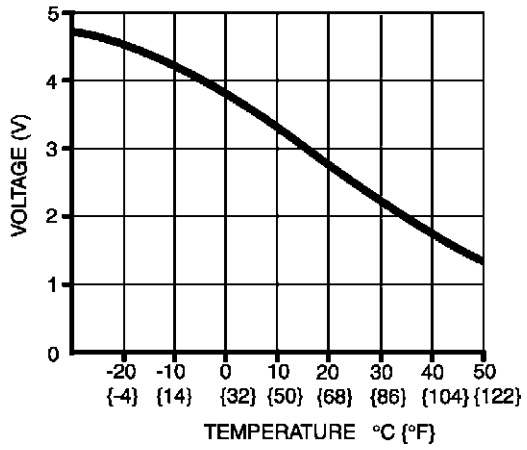

Figure 4 (Water temperature sensor)

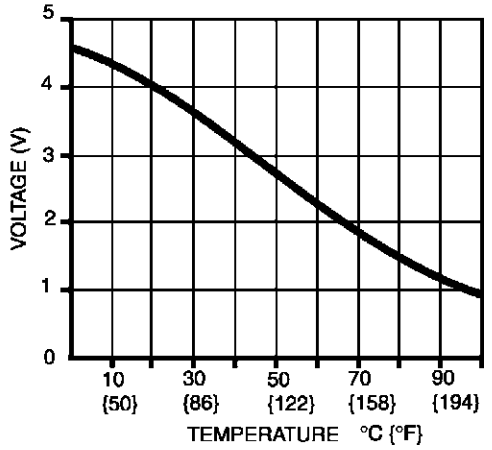

U

FAN SWITCH INSPECTION

A6E854061050W01

1. Remove the climate control unit.
2. Inspect for continuity between the fan switch terminals using an ohmmeter.
   - If not as specified, replace the fan switch.

○—○ : Continuity

Switch position	Terminal				
	A	C	D	E	F
0					
1	○	○			
2	○			○	
3	○				○
4	○		○		

A6E8540W056

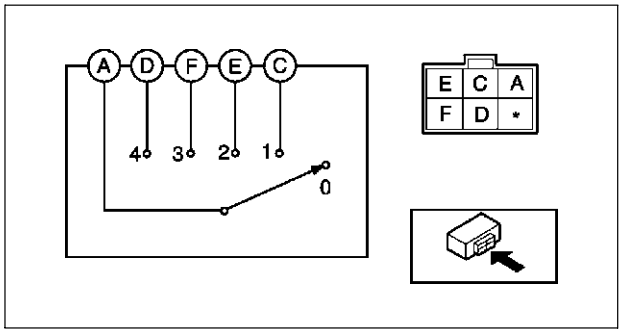

A6E8540W036

DEFROSTER SWITCH INSPECTION

A6E854061050W02

1. Remove the climate control unit.
2. Inspect for continuity between the defroster switch terminals using an ohmmeter.
   - If not as specified, replace the climate control unit.

○—○: Continuity

Switch position	Terminal	
	A	B
OFF		
ON	○	○

A6E8540W057

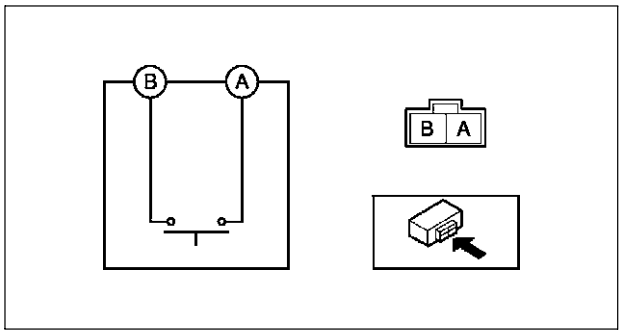

A6E8540W037

ON-BOARD DIAGNOSTIC

DIAGNOSTIC TROUBLE CODE NUMBER INSPECTION

A6E857001038W01

1. Remove the glove compartment.
2. Short the A/C check connector to the GND terminal using a jumper wire.
3. Shine a **60 W** incandescent light from a height of **approximately 100 mm {3.9 in}** onto the solar radiation sensor.

Note
- When incandescent light does not shine on the solar radiation sensor, the climate control unit determines a malfunction and indicates a diagnostic trouble code “02”.

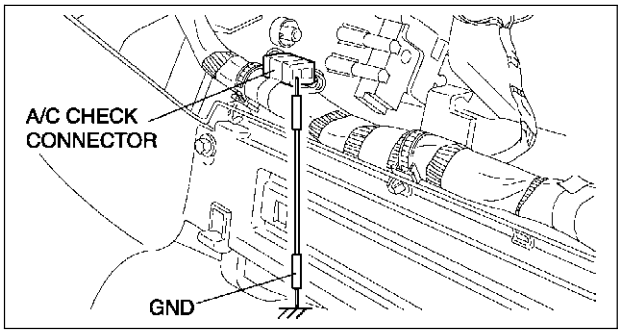

A6E8570W004

4. Turn the ignition switch to ON position.
5. Read DTCs from the flashing of the rear defroster indicator light on the climate control unit. Carry out DTC inspection. (present and past failure indication modes)
   - When the system is normal, the rear defroster indicator light does not flash.
   - If any of the diagnostic trouble codes are indicated, carry out troubleshooting according to the code.
6. After completion of repairs, erase all diagnostic trouble code(s) from memory. (See U–53 Erasing Past Failure Memory.)
7. Remove the jumper wire.

Present Failure Indication Mode

- The on-board diagnostic function display the present failure indication mode directly after start up. In present failure indication mode, present failures in the control system circuits (open, short circuits) are detected, and the flashing of the rear defroster indicator light on the climate control unit indicates the DTCs.
  - — If a diagnostic trouble code is indicated, refer to the following diagnostic trouble code table and inspect the appropriate system.

Past Failure Indication Mode

- While in present failure indication mode, press the A/C switch to change to the past failure indication mode. In past failure indication mode, past failures (intermittent problems) in the input sensor circuits (open, short circuits) are shorted, and the flashing of the rear defroster indicator light on the climate control unit indicates the DTCs.
  - — If a diagnostic trouble code is indicated, refer to the following diagnostic trouble code table and inspect the appropriate system. (Disconnections and short circuits are memorized in the same system even if either occurs only once.)
  - — If the A/C switch is pressed again while in past failure indication mode, the on-board diagnostic function will return to present failure indication mode.

Erasing Past Failure Memory

- When DTCs are displayed in the past failure indication mode, they remain in the memory after the failed systems are corrected. Consequently, the next time the past failure indication mode is used, the same past failure DTCs will be indicated by the flashing of the rear defroster indicator light on the climate control unit. Therefore, erase the past failure memory after correcting all failed systems. To erase the past failure memory, press the AUTO switch and REC/FRESH switch on the climate control unit at the same time while in past failure indication mode. If erased, the rear defroster indicator light flashes once.

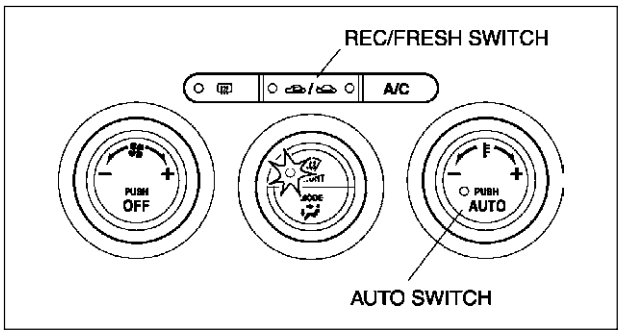

A6E8570W001

DTC Table

No.	Indicator pattern	Diagnosed circuit
02		Solar radiation sensor (present)
06		Cabin temperature sensor (present)
07		Cabin temperature sensor (past)
10		Evaporator temperature sensor (present)
11	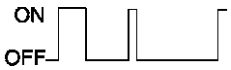	Evaporator temperature sensor (past)
12		Ambient temperature sensor (present)
13	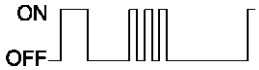	Ambient temperature sensor (past)
14	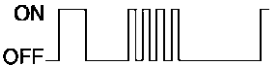	Water temperature sensor (present)
15		Water temperature sensor (past)
18		Air mix actuator [potentiometer] (present)
19		Air mix actuator [potentiometer] (past)
21	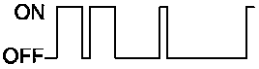	Airflow mode actuator [potentiometer] (present)
22	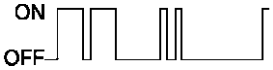	Airflow mode actuator [potentiometer] (past)
58	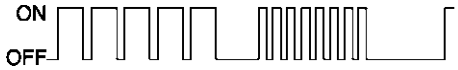	Air mix actuator [motor lock] (past)
59	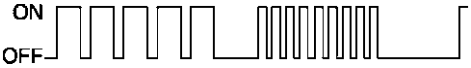	Airflow mode actuator [motor lock] (past)

Output Device Operation Check Mode
Inspection

1. Warm up the engine.
2. Turn the ignition switch to LOCK position.
3. Start up the on-board diagnostic function (present failure indication mode).
4. Press the AUTO switch.
5. Verify that all the indicator lights of the climate control unit and center panel (climate control part) illuminate for **4 seconds**.
6. Verify the operation of the each output device when changing steps by pressing the REC/ FRESH switch, and referring to the output device operation check chart.
   - If not as specified, inspect the malfunctioning system.

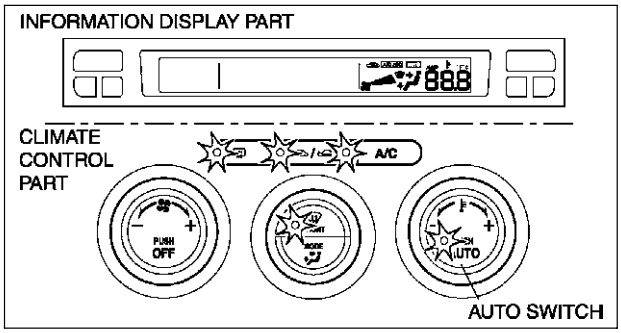

A6E8570W002

Note
- If the AUTO switch is pressed again, the on-board diagnostic function will return to present failure indication mode.

7. Turn the ignition switch to LOCK position to end the on-board diagnostic function.

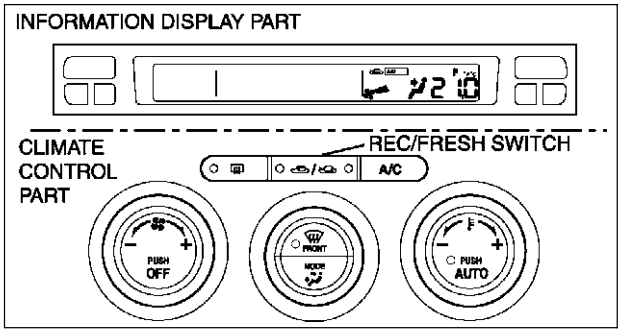

A6E8570W003

Output device operation check table

Step	Operating device	Operating conditions	Monitor*	Other device conditions
1	Blower motor speed	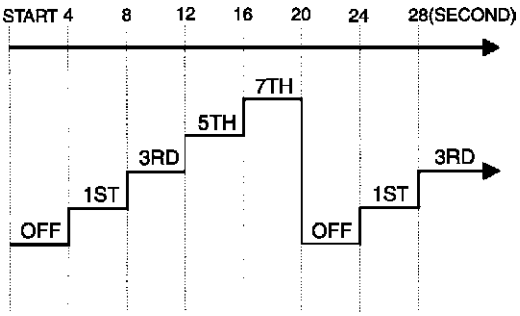	1	• Air mix actuator operation — 50% • Airflow mode actuator operation — VENT • Air intake actuator operation — FRESH • A/C compressor operation — ON
2	Air mix actuator operation	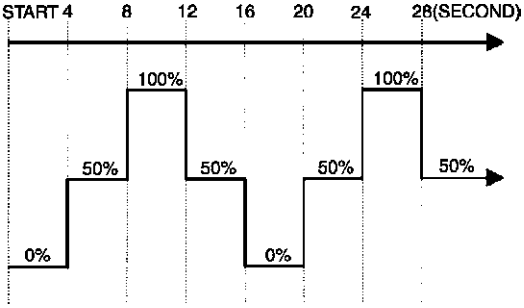	21.0 20.5 20.0	• Blower motor speed — 3rd • Airflow mode actuator operation — VENT • Air intake actuator operation — FRESH • A/C compressor operation — ON

U

Step	Operating device	Operating conditions	Monitor*	Other device conditions
3	Airflow mode actuator operation	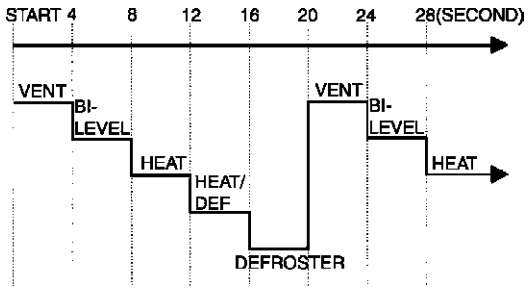	3	• Blower motor speed — 3rd • Air mix actuator operation — 50% • Air intake actuator operation — FRESH • A/C compressor operation — ON
4	Air intake actuator operation	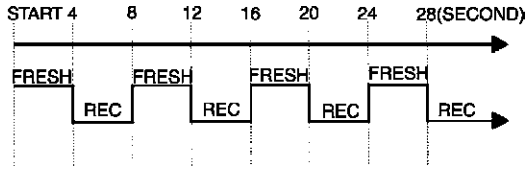	4	• Blower motor speed — 3rd • Air mix actuator operation — 0% • Airflow mode actuator operation — VENT
	A/C compressor operation	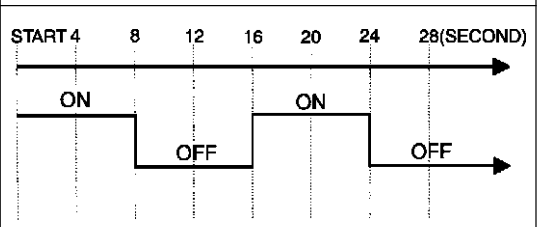		

* : Shown on the information display according to step.

DTC 02

A6E857001038W02

DTC 02	Solar radiation sensor system inspection
POSSIBLE CAUSE	• Solar radiation sensor malfunction • Climate control unit malfunction • Open or short circuit between solar radiation sensor and climate control unit

Diagnostic Procedure

STEP	INSPECTION		ACTION
1	• Inspect solar radiation sensor. • Is it okay?	Yes	Go to next step.
		No	Replace solar radiation sensor.
2	• Disconnect climate control unit connector (24-pin) and solar radiation sensor connector. • Is there continuity between following terminals of climate control unit connector (24-pin) and terminal solar radiation sensor connector? — 1S—B — 1B—A	Yes	Go to next step.
		No	Repair wiring harness.
3	• Is there short circuit to ground between terminal 1S of climate control unit connector (24-pin) and terminal B of solar radiation sensor connector?	Yes	Repair wiring harness.
		No	Replace climate control unit.

DTC 06

A6E857001038W03

DTC 06	Cabin temperature sensor system inspection
POSSIBLE CAUSE	• Cabin temperature sensor malfunction • Climate control unit malfunction • Open or short circuit between cabin temperature sensor and climate control unit

Diagnostic Procedure

STEP	INSPECTION		ACTION
1	• Is resistance between terminals 1I and 1M of climate control unit connector (24-pin) as indicated below? — **137 ohms—220 kilohms**	Yes	Replace climate control unit.
		No	Go to next step.
2	• Inspect cabin temperature sensor. • Is it okay?	Yes	Repair wiring harness.
		No	Replace cabin temperature sensor.

DTC 07

A6E857001038W04

DTC 07	Cabin temperature sensor system inspection
POSSIBLE CAUSE	• Cabin temperature sensor malfunction • Climate control unit malfunction • Open or short circuit between cabin temperature sensor and climate control unit

Diagnostic Procedure

STEP	INSPECTION		ACTION
1	• Inspect cabin temperature sensor. • Is it okay?	Yes	Go to next step.
		No	Replace cabin temperature sensor.
2	• Disconnect climate control unit connector (24-pin) and cabin temperature sensor connector. • Is there open circuit between the following terminals of climate control unit connector (24-pin) and cabin temperature sensor connector? — 1I—A — 1M—B	Yes	Repair wiring harness.
		No	Go to next step.
3	• Is there short circuit to ground between terminal 1M of climate control unit connector (24-pin) and B of cabin temperature sensor connector?	Yes	Repair wiring harness.
		No	Connect climate control unit connector, then go to next step.
4	• Turn the ignition switch to ON position. • Measure voltage at terminal the following terminal 1M of climate control unit connector (24-pin). • Is voltage **approximately 5V**?	Yes	This system is normal at present. (Erase the past failure from memory.)
		No	Replace climate control unit.

DTC 10

A6E857001038W05

DTC 10	Evaporator temperature sensor system inspection
POSSIBLE CAUSE	• Evaporator temperature sensor malfunction • Climate control unit malfunction • Open or short circuit between evaporator temperature sensor and climate control unit

Diagnostic Procedure

STEP	INSPECTION		ACTION
1	• Is resistance between terminals 1I and 1Q of climate control unit connector (24-pin) as indicated below? — **128 ohms—179 kilohms**	Yes	Replace climate control unit.
		No	Go to next step.
2	• Inspect evaporator temperature sensor. • Is it okay?	Yes	Repair wiring harness.
		No	Replace evaporator temperature sensor.

DTC 11

A6E857001038W06

DTC 11	Evaporator temperature sensor system inspection
POSSIBLE CAUSE	• Evaporator temperature sensor malfunction • Climate control unit malfunction • Open or short circuit between evaporator temperature sensor and climate control unit

U

Diagnostic Procedure

STEP	INSPECTION		ACTION
1	• Inspect evaporator temperature sensor. • Is it okay?	Yes	Go to next step.
		No	Replace evaporator temperature sensor.
2	• Disconnect climate control unit connector (24-pin) and evaporator temperature sensor connector. • Is there open circuit between following terminals of climate control unit connector (24-pin) and evaporator temperature sensor connector? — 1Q—B — 1I—A	Yes	Repair wiring harness.
		No	Go to next step.
3	• Is there short circuit to ground between terminal 1Q of climate control unit connector (24-pin) and terminal B of evaporator temperature sensor connector?	Yes	Repair wiring harness.
		No	Connect climate control unit connector, then go to next step.
4	• Turn ignition switch to ON position. • Measure voltage at terminal 1Q of climate control unit connector (24-pin). • Is voltage **approximately 5 V**?	Yes	This system is normal at present. (Erase the past failure from memory.)
		No	Replace climate control unit.

DTC 12

A6E857001038W07

DTC 12	Ambient temperature sensor system inspection
POSSIBLE CAUSE	• Ambient temperature sensor malfunction • Climate control unit malfunction • Open or short circuit between ambient temperature sensor and climate control unit

Diagnostic Procedure

STEP	INSPECTION		ACTION
1	• Is resistance between terminals 1I and 1K of climate control unit connector (24-pin) as indicated below? — **122 ohms—182 kilohms**	Yes	Replace climate control unit.
		No	Go to next step.
2	• Inspect ambient temperature sensor. • Is it okay?	Yes	Repair wiring harness.
		No	Replace ambient temperature sensor.

DTC 13

A6E857001038W08

DTC 13	Ambient temperature sensor system inspection
POSSIBLE CAUSE	• Ambient temperature sensor malfunction • Climate control unit malfunction • Open or short circuit between ambient temperature sensor and climate control unit

Diagnostic Procedure

STEP	INSPECTION		ACTION
1	• Inspect ambient temperature sensor. • Is it okay?	Yes	Go to next step.
		No	Replace ambient temperature sensor.
2	• Disconnect climate control unit connector (24-pin) and ambient temperature sensor connector. • Is there open circuit between following terminals of climate control unit connector (24-pin) and ambient temperature sensor connector? — 1K—B — 1I—A	Yes	Repair wiring harness.
		No	Go to next step.
3	• Is there short circuit to ground between terminal 1K of climate control unit connector (24-pin) and terminal B of ambient temperature sensor connector?	Yes	Repair wiring harness.
		No	Connect climate control unit connector, then go to next step.

STEP	INSPECTION		ACTION
4	• Turn ignition switch to ON position. • Measure voltage at terminal 1K of climate control unit connector (24-pin). • Is voltage **approximately 5 V**?	Yes	This system is normal at present. (Erase the past failure from memory.)
		No	Replace climate control unit.

DTC 14

A6E857001038W09

DTC 14	Water temperature sensor system inspection
POSSIBLE CAUSE	• Water temperature sensor malfunction • Climate control unit malfunction • Open or short circuit between water temperature sensor and climate control unit

Diagnostic Procedure

STEP	INSPECTION		ACTION
1	• Is resistance between terminals 1I and 1O of climate control unit connector (24-pin) as indicated below? • **112 ohms—110 kilohms**	Yes	Replace climate control unit.
		No	Go to next step.
2	• Inspect water temperature sensor. • Is it okay?	Yes	Repair wiring harness.
		No	Replace water temperature sensor.

DTC 15

A6E857001038W10

DTC 15	Water temperature sensor system inspection
POSSIBLE CAUSE	• Water temperature sensor malfunction • Climate control unit malfunction • Open or short circuit between water temperature sensor and climate control unit

Diagnostic Procedure

STEP	INSPECTION		ACTION
1	• Is water temperature sensor normal?	Yes	Go to next step.
		No	Replace water temperature sensor.
2	• Disconnect climate control unit connector (24-pin) and water temperature sensor connector. • Is there open circuit between following terminals of climate control unit connector (24-pin) and water temperature sensor connector? — 1O—A — 1I—B	Yes	Repair wiring harness.
		No	Go to next step.
3	• Is there short circuit to ground between terminal 1O of climate control unit connector (24-pin) and terminal A of water temperature sensor connector?	Yes	Repair wiring harness.
		No	Connect climate control unit connector and go to next step.
4	• Turn the ignition switch to ON position. • Is voltage at terminal 1O of climate control unit connector (24-pin) **above 5 V**?	Yes	This system is normal at present. (Erase the past failure from memory.)
		No	Replace climate control unit.

DTC 18

A6E857001038W11

DTC 18	Air mix actuator (potentiometer) system inspection
POSSIBLE CAUSE	• Air mix actuator malfunction • Climate control unit malfunction • Open circuit between air mix actuator and climate control unit • Short circuit between air mix actuator (terminal C) and climate control unit (terminal 1U: 24-pin)

Diagnostic Procedure

STEP	INSPECTION		ACTION
1	• Inspect air mix actuator. • Is it okay?	Yes	Go to next step.
		No	Replace air mix actuator.

STEP	INSPECTION		ACTION
2	• Disconnect airflow mode actuator connector. • Is resistance between terminals 1U and 1I of climate control unit connector (24-pin) more than **387 ohms**?	Yes	Go to next step.
		No	Repair wiring harness. (Short circuit)
3	• Disconnect climate control unit connector (24-pin). • Is resistance between terminals 1B and 1I of climate control unit connector (24-pin) less than **4.8 kilohms**?	Yes	Go to next step.
		No	Repair wiring harness. (Open circuit)
4	• Is resistance between terminals 1B and 1U of climate control unit connector (24-pin) less than **4.2 kilohms**?	Yes	Replace climate control unit.
		No	Repair wiring harness. (Open circuit)

DTC 19

A6E857001038W12

DTC 19	Air mix actuator (potentiometer) system inspection
POSSIBLE CAUSE	• Air mix actuator malfunction • Climate control unit malfunction • Open circuit between air mix actuator and climate control unit • Short circuit between air mix actuator (terminal C) and climate control unit (terminal 1U: 24-pin)

Diagnostic Procedure

STEP	INSPECTION		ACTION
1	• Inspect air mix actuator. • Is it okay?	Yes	Go to next step.
		No	Replace air mix actuator.
2	• Disconnect climate control unit connector (24-pin) and air mix actuator connector. • Is there open circuit between following terminals of climate control unit connector (24-pin) and air mix actuator connector? — 1B—B — 1U—C — 1I—A	Yes	Repair wiring harness.
		No	Go to next step.
3	• Is there short circuit to ground between terminal 1U of climate control unit connector (24-pin) and terminal C of air mix actuator connector?	Yes	Repair wiring harness.
		No	This system is normal at present. (Erase the past failure from memory.)

DTC 21

A6E857001038W13

DTC 21	Airflow mode actuator (potentiometer) system inspection
POSSIBLE CAUSE	• Airflow mode actuator malfunction • Climate control unit malfunction • Open circuit between airflow mode actuator and climate control unit • Short circuit between airflow mode actuator (terminal C) and climate control unit (terminal 1W: 24-pin)

Diagnostic Procedure

STEP	INSPECTION		ACTION
1	• Inspect airflow mode actuator. • Is it okay?	Yes	Go to next step.
		No	Replace airflow mode actuator.
2	• Disconnect air mix actuator connector. • Is resistance between terminals 1W and 1I of climate control unit connector (24-pin) more than **387 ohms**?	Yes	Go to next step.
		No	Repair wiring harness. (Short circuit)
3	• Disconnect climate control unit connector (24-pin). • Is resistance between terminals 1B and 1I of climate control unit connector (24-pin) less than **4.8 kilohms**?	Yes	Go to next step.
		No	Repair wiring harness. (Open circuit)
4	• Is resistance between terminals 1B and 1W of climate control unit connector (24-pin) less than **4.2 kilohms**?	Yes	Replace climate control unit.
		No	Repair wiring harness. (Open circuit)

DTC 22

A6E857001038W14

DTC 22	Airflow mode actuator (potentiometer) system inspection
POSSIBLE CAUSE	• Airflow mode actuator malfunction • Climate control unit malfunction • Open circuit between airflow mode actuator and climate control unit • Short circuit between airflow mode actuator (terminal C) and climate control unit (terminal 1W: 24-pin)

Diagnostic Procedure

STEP	INSPECTION		ACTION
1	• Inspect airflow mode actuator. • Is it okay?	Yes	Go to next step.
		No	Replace airflow mode actuator.
2	• Disconnect climate control unit connector (24-pin) and air mix actuator connector. • Is there open circuit between following terminals of climate control unit connector (24-pin) and airflow mode actuator connector? — 1B—B — 1W—C — 1I—A	Yes	Repair wiring harness.
		No	Go to next step.
3	• Is there short circuit to ground between terminal 1W of climate control unit connector (24-pin) and terminal C of airflow mode actuator connector?	Yes	Repair wiring harness.
		No	This system is normal at present. (Erase the past failure from memory.)

DTC 58

A6E857001038W15

DTC 58	Air mix actuator (motor lock) system inspection
POSSIBLE CAUSE	• Air mix actuator malfunction • A/C unit (air mix link and/or air mix crank) malfunction • Climate control unit malfunction • Open or short circuit between air mix actuator and climate control unit

Diagnostic Procedure

STEP	INSPECTION		ACTION
1	• Disconnect air mix actuator connector. • Connect battery positive voltage to terminal D (or terminal F) and ground to terminal F (or terminal D) of air mix actuator connector. • Does air mix actuator operate?	Yes	Connect air mix actuator connector, then go to Step 3.
		No	Go to next step.
2	• Remove air mix actuator. • Operate air mix link by hand. • Does air mix link operate smoothly?	Yes	Replace air mix actuator.
		No	Replace air mix link and/or air mix crank.
3	• Disconnect climate control unit connect (12-pin). • Connect battery positive voltage to terminal 2D (or terminal 2C) and ground to terminal 2C (or terminal 2D) of climate control unit connector (24-pin). • Does air mix actuator operate?	Yes	Replace climate control unit.
		No	Repair wiring harness.

DTC 59

A6E857001038W16

DTC 59	Airflow mode actuator (motor lock) system inspection
POSSIBLE CAUSE	• Airflow mode actuator malfunction • A/C unit (airflow mode links and/or airflow mode cranks) malfunction • Climate control unit malfunction • Open or short circuit between airflow mode actuator and climate control unit

Diagnostic Procedure

STEP	INSPECTION		ACTION
1	• Disconnect airflow mode actuator connector. • Connect battery positive voltage to terminal D (or terminal F) and ground to terminal F (or terminal D) of airflow mode actuator connector. • Does airflow mode actuator operate?	Yes	Connect airflow mode actuator connector, then go to Step 3.
		No	Go to next step.
2	• Remove airflow mode actuator. • Operate airflow mode main link by hand. • Does airflow mode main link operate smoothly?	Yes	Replace airflow mode actuator.
		No	Replace airflow mode links and/or airflow mode cranks.
3	• Disconnect climate control unit connect (12-pin). • Connect battery positive voltage to terminal 2G (or terminal 2E) and ground to terminal 2E (or terminal 2G) of climate control unit connector (24-pin). • Does airflow mode actuator operate?	Yes	Replace climate control unit.
		No	Repair wiring harness.

DTC 02, 18, 21 (WHEN TWO OR MORE DTCS ARE INDICATED AT THE SAME TIME)

A6E857001038W17

DTC 02, 18, 21	Climate control unit (+5 V power supply) inspection
POSSIBLE CAUSE	• Climate control unit malfunction • Short circuit between climate control unit and solar radiation sensor • Short circuit between climate control unit and air mix actuator • Short circuit between climate control unit and airflow mode actuator • Open circuit between climate control unit and solar radiation sensor • Open circuit between climate control unit and air mix actuator • Open circuit between climate control unit and airflow mode actuator

Diagnostic Procedure

STEP	INSPECTION		ACTION
1	• Disconnect climate control unit cooonnector (24-pin) and airflow mode actuator connector. • Is there continuity between terminal 1B of climate control unit connector (24-pin) and terminal B of airflow mode actuator connector?	Yes	Go to next step.
		No	Repair wiring harness.
2	• Is there short circuit to ground between terminal 1B of climate control unit connector (24-pin) and terminal B of airflow mode actuator connector?	Yes	Repair wiring harness.
		No	Go to next step.
3	• Is there short circuit to ground between terminal 1B of climate control unit connector (24-pin) and terminal B of air mix actuator connector?	Yes	Repair wiring harness.
		No	Go to next step.
4	• Is there short circuit to ground between terminal 1B of climate control unit connector (24-pin) and terminal A of solar radiation sensor connector?	Yes	Repair wiring harness.
		No	Replace climate control unit.

DTC 06, 10, 12, 14, 18, 21 (WHEN TWO OR MORE DTCS ARE INDICATED AT THE SAME TIME)

A6E857001038W18

DTC 06, 10, 12, 18, 21	Climate control unit (+5V power supply or sensor ground system) or sensor ground system inspection
POSSIBLE CAUSE	• Climate control unit malfunction • Open circuit between climate control unit and each temperature sensor • Open circuit between climate control unit and air mix actuator • Open circuit between climate control unit and airflow mode actuator

Diagnostic Procedure

STEP	INSPECTION		ACTION
1	• Disconnect climate control unit connector (24-pin) and evaporator temperature sensor connector. • Is there continuity between terminal 1I of climate control unit connector (24-pin) and terminal A of evaporator temperature sensor connector?	Yes	Replace climate control unit.
		No	Repair wiring harness.

DTC 07, 11, 13, 15, 19, 22 (WHEN TWO OR MORE DTCS ARE INDICATED AT THE SAME TIME)

A6E857001038W19

DTC 07, 11, 13, 15, 19, 22	Climate control unit (+5V power supply or sensor ground system) or sensor ground system inspection
POSSIBLE CAUSE	• Climate control unit malfunction • Open circuit between climate control unit each temperature sensor • Open circuit between climate control unit and air mix actuator • Open circuit between climate control unit and airflow mode actuator

Diagnostic Procedure

STEP	INSPECTION		ACTION
1	• Disconnect climate control unit connector (24-pin) and evaporator temperature sensor connector. • Is there open circuit between terminal 1I of climate control unit connector (24-pin) and terminal A of evaporator temperature sensor connector?	Yes	Repair wiring harness.
		No	This system is normal at present. (Erase the past failure from memory.)

DTC 19, 22 (WHEN TWO OR MORE DTCS ARE INDICATED AT THE SAME TIME)

A6E857001038W20

DTC 19, 22	Climate control unit (+5V power supply) inspection
POSSIBLE CAUSE	• Climate control unit malfunction • Short circuit between climate control unit and solar radiation sensor • Short circuit between climate control unit and air mix actuator • Short circuit between climate control unit and airflow mode actuator • Open circuit between climate control unit and solar radiation sensor • Open circuit between climate control unit and air mix actuator • Open circuit between climate control unit and airflow mode actuator

U

Diagnostic Procedure

STEP	INSPECTION		ACTION
1	• Disconnect climate control unit connector (24-pin) and airflow mode actuator connector. • Is there open circuit between terminal 1B of climate control unit connector (24-pin) or terminal B of airflow mode actuator connector?	Yes	Repair wiring harness.
		No	Go to next step.
2	• Is there short circuit to ground between terminal 1B of climate control unit connector (24-pin) and terminal B of airflow mode actuator connector?	Yes	Repair wiring harness.
		No	Go to next step.
3	• Is there short circuit to ground between terminal 1B of climate control unit connector (24-pin) and terminal B of air mix actuator connector?	Yes	Repair wiring harness.
		No	Go to next step.
4	• Is there short circuit to ground between terminal 1B of climate control unit connector (24-pin) and terminal A of solar radiation sensor connector?	Yes	Repair wiring harness.
		No	This system is normal at present. (Erase the past failure from memory.)

TROUBLESHOOTING

FOREWORD

A6E858001038W01

- The areas for inspection (steps) are given according to various circuit malfunctions. Use the following chart to verify the symptoms of the trouble in order to diagnose the appropriate area.

TROUBLESHOOTING INDEX

A6E858001038W02

No.	TROUBLESHOOTING ITEM	DESCRIPTION
1	Insufficient air (or no air) blown from vents.	• Problem with each vent and/or duct.
2	Amount of air blown from vents does not change. (Full-auto air conditioner)	• Malfunction in blower system.
3	Amount of air blown from vents does not change. (Manual air conditioner)	• Malfunction in blower system.
4	Air intake mode does not change.	• Air intake mode does not change when switching REC/FRESH mode.
5	No temperature control with climate control unit.	• Malfunction in A/C unit and/or climate control unit air mix system.
6	Windshield fogged.	• A/C compressor does not operate while airflow mode is in DEFROSTER or HEAT/DEF modes. • Air intake mode does not change to FRESH while airflow mode is in DEFROSTER or HEAT/DEF modes.
7	Air from vents not cold enough.	• Magnetic clutch operates but A/C system malfunctions.
8	No cool air.	• Magnetic clutch does not operate.
9	Noise while operating A/C system.	• Noise from magnetic clutch, A/C compressor, hose or refrigerant line.

NO.1 INSUFFICIENT AIR (OR NO AIR) BLOWN FROM VENTS

A6E858001038W03

1	**Insufficient air (or no air) blown from vents.**
DESCRIPTION	• Problem with each vent and/or duct.
POSSIBLE CAUSE	• Malfunction in VENT mode system (Steps 1—4) • Malfunction in HEAT mode system (Step 5) • Malfunction in DEFROSTER mode system (Steps 6—8)

Diagnostic procedure

STEP	INSPECTION		ACTION
1	**INSPECT TO SEE WHETHER MALFUNCTION IS IN VENT MODE OR OTHER MODES** • Does air blow out when in VENT mode?	Yes	Go to Step 4.
		No	Go to next step.
2	**INSPECT VENT** • Is vent clogged?	Yes	Remove obstruction, then go to Step 8.
		No	Go to next step.
3	**VERIFY THAT DUCT IN DASHBOARD IS INSTALLED** • Is duct in dashboard properly installed?	Yes	Inspect duct for clogging, deformity and air leakage, then go to Step 8.
		No	Install duct securely in the proper position, then go to Step 8.
4	**INSPECT TO SEE WHETHER MALFUNCTION IS IN HEAT MODE OR DEFROSTER MODE** • Does air blow out when in HEAT mode?	Yes	Go to next step.
		No	Inspect vent for clogging, then go to Step 8.
5	**INSPECT DEFROSTER MODE** • Does air blow out when in DEFROSTER mode?	Yes	Operation is okay. Recheck malfunction symptoms.
		No	Go to next step.
6	**INSPECT VENT** • Is vent clogged?	Yes	Remove obstruction, then go to Step 8.
		No	Go to next step.
7	**VERIFY THAT DEFROSTER DUCT IS INSTALLED** • Is defroster duct properly installed?	Yes	Inspect duct for clogging, deformity, and air leakage, then go to next step.
		No	Install duct securely in proper position, then go to next step.
8	**CONFIRM THAT MALFUNCTION SYMPTOMS DO NOT RECUR AFTER REPAIR** • Does air blow out?	Yes	Troubleshooting completed. Explain repairs to customer.
		No	Recheck malfunction symptoms, then repeat from Step 1 if malfunction recurs.

U

NO.2 AMOUNT OF AIR BLOWN FROM VENTS DOES NOT CHANGE

A6E858001038W04

Full-auto Air Conditioner

2	**Amount of air blown from vents does not change.**
DESCRIPTION	• Malfunction in blower system.
POSSIBLE CAUSE	• Malfunction in blower unit (Steps 3, 4, 12) • Malfunction in blower motor (Steps 5—9) • Malfunction in power MOS FET system (Steps 10, 11, 13, 14) • Malfunction in climate control unit (Step 15)

- When performing an asterisked (*) troubleshooting inspection, shake the wiring harness and connectors while performing the inspection to discover whether poor contact points are the cause of any intermittent malfunctions. If there is a problem, check to make sure connectors, terminals and wiring harnesses are connected correctly and undamaged.

Diagnostic procedure

STEP	INSPECTION		ACTION
1	**INSPECT BLOWER 40 A FUSE** • Inspect BLOWER 40 A fuse. • Is it okay?	Yes	Go to next step.
		No	Replace fuse, then go to Step 15. If fuse burns out immediately, go to next step.
2	**INSPECT TO SEE WHETHER MALFUNCTION IS IN BLOWER UNIT OR ELSEWHERE** • Turn ignition switch to ON position. • Recirculate air inside vehicle. • Does blower unit fan rotate smoothly?	Yes	Go to Step 4.
		No	Go to next step.
3	**INSPECT BLOWER UNIT INTAKE VENT** • Is intake vent of blower unit clogged?	Yes	Remove obstruction, then go to Step 15.
		No	Inspect if there are any obstruction in passage between blower unit to A/C unit, then go to Step 15.

STEP	INSPECTION		ACTION
4*	**INSPECT TO SEE WHETHER MALFUNCTION IS IN BLOWER RELAY SYSTEM OR POWER MOS FET SYSTEM** • Turn ignition switch to ON position. • Test voltage at the following terminal of blower motor. — Terminal B (blower motor operation signal) • Is voltage **approximately 12 V**?	Yes	Go to Step 8.
		No	Go to next step.
5*	**INSPECT TO SEE WHETHER MALFUNCTION IS IN WIRING HARNESS (LACK OF CONTINUITY BETWEEN FUSE BLOCK AND BLOWER RELAY) OR ELSEWHERE** • Test voltage at the following terminal of blower relay. — Terminal A (IG2 signal) — Terminal C (B+ signal) • Is voltage **approximately 12 V**?	Yes	Go to next step.
		No	Repair wiring harness between blower relay and BLOWER 40 A fuse, then go to Step 15.
6*	**INSPECT TO SEE WHETHER MALFUNCTION IS IN WIRING HARNESS (LACK OF CONTINUITY BETWEEN BLOWER RELAY AND GROUND) OR ELSEWHERE** • Test voltage at the following terminal of blower relay. — Terminal E (GND signal) • Is voltage **approximately 0 V**?	Yes	Go to next step.
		No	Repair wiring harness between blower relay and ground, then go to Step 15.
7*	**INSPECT TO SEE WHETHER MALFUNCTION IS IN WIRING HARNESS (LACK OF CONTINUITY BETWEEN BLOWER RELAY AND BLOWER MOTOR) OR BLOWER RELAY** • Test voltage at the following terminal of blower relay. — Terminal D (blower motor operation signal) • Is voltage **approximately 12 V**?	Yes	Repair wiring harness between blower relay and blower motor, then go to Step 15.
		No	Replace blower relay, then go to Step 15.
8*	**INSPECT TO SEE WHETHER MALFUNCTION IS IN BLOWER MOTOR OR ELSEWHERE** • Test voltage at the following terminal of blower motor. — Terminal B (blower motor operation signal) • Is voltage **approximately 12 V**?	Yes	Go to next step.
		No	Inspect blower motor, then go to Step 15.
9*	**INSPECT TO SEE WHETHER MALFUNCTION IS IN WIRING HARNESS (LACK OF CONTINUITY BETWEEN BLOWER MOTOR AND POWER MOS FET) OR ELSEWHERE** • Test voltage at the following terminal of power MOS FET. — Terminal C (blower motor operation signal) • Is voltage **approximately 12 V**?	Yes	Go to next step.
		No	Repair wiring harness between blower motor and power MOS FET, then go to Step 15.
10*	**INSPECT TO SEE WHETHER MALFUNCTION IS IN WIRING HARNESS (LACK OF CONTINUITY BETWEEN POWER MOS FET AND GROUND) OR ELSEWHERE** • Test voltage at the following terminal of power MOS FET. — Terminal A (blower motor operation signal) • Is voltage **approximately 0 V**?	Yes	Go to next step.
		No	Repair wiring harness between power MOS FET and ground, then go to Step 15.
11	**INSPECT BLOWER UNIT** • Inspect fan in blower unit. — Is fan free of interference with blower unit case? — Is fan free of foreign material and obstruction? • Is fan okay?	Yes	Go to next step.
		No	Remove obstruction, repair or replace fan and blower unit case, then go to Step 15.

STEP	INSPECTION		ACTION
12*	**INSPECT TO SEE WHETHER MALFUNCTION IS IN POWER MOS FET OR ELSEWHERE** • Disconnect power MOS FET connector. • Test voltage at the following terminal of power MOS FET. — Terminal B (blower motor control signal) • Is voltage **approximately 10 V**?	Yes	Replace power MOS FET, then go to Step 15.
		No	Go to next step.
13*	**INSPECT TO SEE WHETHER MALFUNCTION IS IN WIRING HARNESS (LACK OF CONTINUITY BETWEEN POWER MOS FET AND CLIMATE CONTROL UNIT) OR ELSEWHERE** • Turn ignition switch to LOCK position. • Disconnect climate control unit connector. • Inspect for continuity at the following terminals between power MOS FET and climate control unit. — Terminal B—1C (24-pin, blower motor control signal) — Terminal C—1A (24-pin, blower motor feedback signal) • Is there continuity?	Yes	Go to next step.
		No	Repair wiring harness between power MOS FET and climate control unit, then go to Step 15.
14*	**INSPECT TO SEE WHETHER MALFUNCTION IS IN CLIMATE CONTROL UNIT OR WIRING HARNESS (SHORT TO GROUND BETWEEN POWER MOS FET AND CLIMATE CONTROL UNIT)** • Inspect for continuity at the following terminal between power MOS FET and ground. — Terminal B (blower motor control signal)—ground • Is there continuity?	Yes	Repair wiring harness between power MOS FET and ground, then go to next step.
		No	Replace climate control unit, then go to next step.
15	**CONFIRM THAT MALFUNCTION SYMPTOMS DO NOT RECUR AFTER REPAIR** • Is air discharged from vent?	Yes	Troubleshooting completed. Explain repairs to customer.
		No	Recheck malfunction symptoms, then repeat from Step 1 if malfunction recurs.

U

NO.3 AMOUNT OF AIR BLOWN FROM VENTS DOES NOT CHANGE

A6E858001038W05

Manual Air Conditioner

3	**Amount of air blown from vents does not change.**
DESCRIPTION	• Malfunction in blower system.
POSSIBLE CAUSE	• Blower relay, blower motor, resistor, fan switch malfunction (Step 1) • Blower unit malfunction (Steps 2—4)

Diagnostic procedure

STEP	INSPECTION		ACTION
1	**INSPECT BLOWER SYSTEM** • Inspect the following systems and electrical parts. — Blower relay — Blower motor — Resistor — Fan switch — Related wiring harnesses • Are they okay?	Yes	Go to next step.
		No	Repair or replace malfunctioning part, then go to Step 5.
2	**CHECK TO SEE WHETHER MALFUNCTION IS IN BLOWER UNIT OR ELSEWHERE** • Turn ignition switch to ON position. • Turn fan switch on. • Recirculate air inside vehicle. • Does fan in blower unit rotate smoothly?	Yes	Go to Step 4.
		No	Go to next step.

STEP	INSPECTION		ACTION
3	**INSPECT BLOWER UNIT** • Inspect fan in blower unit. — Is fan free of interference from blower unit case? — Is fan free of foreign material and obstructions? • Is fan okay?	Yes	Go to next step.
		No	Remove obstruction, repair or replace fan and blower unit case, then go to Step 5.
4	**INSPECT BLOWER UNIT INTAKE VENT** • Is blower unit intake vent clogged?	Yes	Remove obstruction, then go to next step.
		No	Inspect if there are any obstructions in passage between blower unit and A/C unit, then go to next step.
5	**VERIFY THAT MALFUNCTION SYMPTOM OCCURS AFTER REPAIR** • Does air blow out?	Yes	Troubleshooting completed. Explain repairs to customer.
		No	Recheck malfunction symptoms, then repeat from Step 1 if malfunction recurs.

NO.4 AIR INTAKE MODE DOES NOT CHANGE

A6E858001038W06

4	**Air intake mode does not change.**
DESCRIPTION	• Air intake mode does not change when switching REC/FRESH mode.
POSSIBLE CAUSE	• Malfunction in air intake actuator (Steps 1—6) • Malfunction in air intake door (Step 7)

- When performing an asterisked (*) troubleshooting inspection, shake the wiring harness and connectors while performing the inspection to discover whether poor contact points are the cause of any intermittent malfunctions. If there is a problem, check to make sure connectors, terminals and wiring harnesses are connected correctly and undamaged.

Diagnostic procedure

STEP	INSPECTION		ACTION
1*	**INSPECT TO SEE WHETHER MALFUNCTION (LACK OF CONTINUITY) IS IN AIR INTAKE ACTUATOR, WIRING HARNESS (BETWEEN CLIMATE CONTROL UNIT AND AIR INTAKE ACTUATOR) OR ELSEWHERE** • Turn ignition switch to ON position. • Test voltages at the following terminals of climate control unit. — Terminal 2K (12-pin, FRESH motor drive signal) — Terminal 2I (12-pin, RECIRCULATE motor drive signal) (See U–47 Full-auto Air Conditioner) • Are voltages okay?	Yes	Go to next step.
		No	Go to Step 3.
2*	**INSPECT TO SEE WHETHER MALFUNCTION (LACK OF CONTINUITY) IS IN AIR INTAKE ACTUATOR OR WIRING HARNESS (BETWEEN CLIMATE CONTROL UNIT AND AIR INTAKE ACTUATOR)** • Test voltages at the following terminals of air intake actuator. — Terminal D (FRESH motor drive signal) — Terminal F (RECIRCULATE motor drive signal) • Are voltages as shown below? — Terminal D: **approximately 0.5 V** during RECIRCULATE and **approximately 10 V** during FRESH — Terminal F: **approximately 10 V** during RECIRCULATE and **approximately 0.5 V** during FRESH	Yes	Replace air intake actuator, then go to Step 8.
		No	Repair wiring harness between climate control unit and air intake actuator, then go to Step 8.

STEP	INSPECTION		ACTION
3	**INSPECT TO SEE WHETHER MALFUNCTION IS IN AIR INTAKE ACTUATOR OR ELSEWHERE** • Disconnect air intake actuator connector. • Test voltages at the following terminals of climate control unit. — Terminal 2K (12-pin, FRESH motor drive signal) — Terminal 2I (12-pin, RECIRCULATE motor drive signal) (See U–47 Full-auto Air Conditioner) • Are voltages okay?	Yes	Inspect air intake actuator, then go to Step 8.
		No	Go to next step.
4	**INSPECT TO SEE WHETHER MALFUNCTION IS IN WIRING HARNESS (SHORT TO B+ BETWEEN CLIMATE CONTROL UNIT AND AIR INTAKE ACTUATOR) OR ELSEWHERE** • Disconnect climate control unit connector. • Test voltages at the following terminals of climate control unit. — Terminal 2K (12-pin, FRESH motor drive signal) — Terminal 2I (12-pin, RECIRCULATE motor drive signal) • Are voltages **approximately 0 V**?	Yes	Go to next step.
		No	Repair wiring harness between climate control unit and air intake actuator, then go to Step 8.
5	**INSPECT TO SEE WHETHER MALFUNCTION IS IN WIRING HARNESS (SHORT TO GROUND BETWEEN CLIMATE CONTROL UNIT AND AIR INTAKE ACTUATOR) OR ELSEWHERE** • Turn ignition switch to LOCK position. • Inspect for continuity at the following terminals between climate control unit and ground. — Terminal 2K (12-pin, FRESH motor drive signal) — Terminal 2I (12-pin, RECIRCULATE motor drive signal) • Is there continuity?	Yes	Repair wiring harness between climate control unit and air intake actuator, then go to Step 8.
		No	Go to next step.
6	**INSPECT AIR INTAKE LINK** • Inspect air intake links. — Is there grease on link? — Are links securely and properly installed? — Are links free of obstructions and hindrances? • Are above items okay?	Yes	Go to next step.
		No	Apply grease to links. If any links are damaged, replace air intake actuator, then go to Step 8.
7	**INSPECT TO SEE WHETHER MALFUNCTION IS IN CLIMATE CONTROL UNIT OR AIR INTAKE DOOR** • Inspect blower unit air intake door. — Is door free of obstructions, cracks, and damage? — Are doors securely and properly installed? • Are above items okay?	Yes	Replace climate control unit, then go to next step.
		No	Remove obstruction, or install doors in proper position. If any doors are cracked or damaged, replace them, then go to next step.
8	**CONFIRM THAT MALFUNCTION SYMPTOMS DO NOT RECUR AFTER REPAIR** • Does air intake mode change smoothly?	Yes	Troubleshooting completed. Explain repairs to customer.
		No	Recheck malfunction symptoms, then repeat from Step 1 if malfunction recurs.

NO.5 NO TEMPERATURE CONTROL WITH CLIMATE CONTROL UNIT

A6E858001038W07

5	**No temperature control with climate control unit.**
DESCRIPTION	• Malfunction in A/C unit and/or climate control unit air mix system.
POSSIBLE CAUSE	• A/C unit air mix link, air mix crank, air mix rod, air mix wire, wire clamp malfunction (Steps 2, 3) • Climate control unit rack-and-pinion, air mix wire malfunction (Step 4) • A/C unit air mix door malfunction (Steps 5, 6) • Heater piping malfunction (Step 7)

Diagnostic procedure

STEP	INSPECTION		ACTION
1	**INSPECT COOLANT TEMPERATURE** • Is coolant sufficiently warmed up?	Yes	Go to next step.
		No	Warm engine up, then go to Step 8.
2	**INSPECT A/C UNIT AIR MIX SYSTEM** • Inspect A/C unit air mix links, air mix cranks, air mix rods, air mix actuator or wire clamp. — Is there grease on links and cranks? — Are links, cranks, and rods securely installed in their proper positions? — Is wire clamp free of deformation? • Are above items okay?	Yes	Go to next step.
		No	Apply grease or install links, cranks, and rods securely in their proper positions, repair or replace air mix actuator or wire clamp, then go to Step 8.
3	**VERIFY THAT AIR MIX WIRE FROM A/C UNIT IS POSITIONED SECURELY AND CORRECTLY (IF AVAILABLE)** • Is air mix wire securely installed in the correct position in relation to A/C unit air mix links?	Yes	Go to next step.
		No	Adjust air mix wire or install securely in correct position, then go to Step 8.
4	**INSPECT CLIMATE CONTROL UNIT** • Inspect climate control unit. (See U–47 CLIMATE CONTROL UNIT INSPECTION) • Is climate control unit okay?	Yes	Go to next step.
		No	Repair or replace climate control unit, then go to Step 8.
5	**INSPECT A/C UNIT** • Is there any foreign material or obstruction in A/C unit air mix doors?	Yes	Remove obstruction, then go to Step 8.
		No	Go to next step.
6	**INSPECT A/C UNIT AIR MIX DOORS** • Is A/C unit air mix door securely and properly installed?	Yes	Inspect air mix door for cracks or damage, then go to next step.
		No	Install air mix door securely in proper position, then go to next step.
7	**INSPECT HEATER LINES** • Inspect heater lines. — Is heater piping free of damage and cracks? — Are heater piping connections free of engine coolant leakage? — Are heater piping connections securely tightened? — Are heater piping installation points on A/C unit free of engine coolant leakage? • Are above items okay?	Yes	Operation is okay. Recheck malfunction symptoms.
		No	If heater piping connections is loosed, tighten connections with specified torque. Repair or replace heater piping, then go to next step.
8	**VERIFY THAT MALFUNCTION SYMPTOM OCCURS AFTER REPAIR** • Does unit operate in every temperature setting?	Yes	Troubleshooting completed. Explain repairs to customer.
		No	Recheck malfunction symptoms, then repeat from Step 1 if malfunction recurs.

NO.6 WINDSHIELD FOGGED

A6E858001038W08

- When performing an asterisked (*) troubleshooting inspection, shake the wiring harness and connectors while doing the inspection to discover whether poor contact points are the cause of any intermittent malfunctions. If there is a problem, check to make sure connectors, terminals and wiring harness are connected correctly and undamaged.

6	**Windshield fogged.**
DESCRIPTION	• A/C compressor does not operate while airflow mode is in DEFROSTER or HEAT/DEF modes. • Air intake mode does not change to FRESH while airflow mode is in DEFROSTER or HEAT/DEF modes.

POSSIBLE CAUSE	• Climate control unit (B+ signal) system malfunction (Steps 2, 4, 5) • Air intake actuator malfunction (Steps 3, 7) • Climate control unit (RECIRCULATE, FRESH signal) system malfunction (Steps 9—11) • Malfunction in blower unit air intake doors (Steps 12, 13)

Diagnostic procedure

STEP	INSPECTION		ACTION
1	**COOL AIR BLOW OUT INSPECTION** • When both A/C and fan switch in climate control unit are on, does cool air blow out from front vent?	Yes	Go to next step.
		No	Go to Step 1 of troubleshooting index No.8.
2	**INSPECT CLIMATE CONTROL UNIT POWER SUPPLY FUSE FOR B+ SIGNAL** • Is climate control unit power supply fuse for B+ signal okay?	Yes	Go to next step.
		No	Inspect for a short to ground on blown fuse circuit. • Repair or replace as necessary. Install appropriate amperage fuse.
3	**INSPECT AIR INTAKE ACTUATOR** • Inspect air intake actuator. — Is there grease on link? — Is link securely and properly positioned? — Is link free of obstructions? • Are above items okay?	Yes	Go to next step.
		No	Apply grease or install link properly and securely, remove obstruction, then go to Step 14.
*4	**INSPECT WIRING HARNESS BETWEEN FUSE BLOCK AND CLIMATE CONTROL UNIT FOR CONTINUITY** • Disconnect climate control unit connector (12-pin). • Turn ignition switch to ON position. • Test voltage at climate control unit connector terminal F (B+ signal). • Is voltage **approximately 12 V**?	Yes	Go to next step.
		No	Repair wiring harness between fuse block and climate control unit, then go to Step 14.
*5	**INSPECT WIRING HARNESS BETWEEN CLIMATE CONTROL UNIT AND GROUND FOR VOLTAGE** • Test voltage at climate control unit connector terminal 2L (Ground). • Is voltage **approximately 0V**?	Yes	Go to next step.
		No	Repair wiring harness between climate control unit and ground, then go to Step 14.
6	**VERIFY WHETHER MALFUNCTION IS IN BLOWER UNIT AIR INTAKE DOOR OR ELSEWHERE** • Turn ignition switch to LOCK position. • Connect climate control unit connector (12-pin). • Remove air intake actuator. • Turn ignition switch to ON position. • Set fan switch to 4th position. • Does air intake mode (RECIRCULATE, FRESH) change smoothly when air intake link is operated by hand?	Yes	Go to next step.
		No	Go to Step 12.
7	**INSPECT AIR INTAKE ACTUATOR** • Inspect air intake actuator. (See U–30 AIR INTAKE ACTUATOR INSPECTION) • Is it okay?	Yes	Go to next step.
		No	Replace air intake actuator, go to Step 14.
8	**INSPECT AIR INTAKE SELECTOR SWITCH AND DEFROSTER SWITCH IN CLIMATE CONTROL UNIT** • Test voltage at climate control unit connector (12-pin) terminals 2K and 2I. • Is it okay?	Yes	Go to next step.
		No	Replace climate control unit, then go to Step 14.

U

STEP	INSPECTION		ACTION
*9	**INSPECT WIRING HARNESS BETWEEN CLIMATE CONTROL UNIT AND AIR INTAKE ACTUATOR FOR CONTINUITY** • Turn ignition switch to LOCK position. • Is there continuity between following climate control unit connector (12-pin) terminal and air intake actuator connector terminal? — Terminal D —Terminal 2K (FRESH signal) — Terminal F —Terminal 2I (RECIRCULATE signal)	Yes	Go to next step.
		No	Repair wiring harness between climate control unit and air intake actuator, then go to Step 14.
*10	**INSPECT WIRING HARNESS BETWEEN CLIMATE CONTROL UNIT AND AIR INTAKE ACTUATOR FOR SHORT TO GROUND** • Is there continuity between following climate control unit connector (12-pin) terminal and ground? — Terminal 2K (FRESH signal) — Terminal 2I (RECIRCULATE signal)	Yes	Repair wiring harness between climate control unit and air intake actuator, then go to Step 14.
		No	Go to next step.
*11	**INSPECT WIRING HARNESS BETWEEN CLIMATE CONTROL UNIT AND AIR INTAKE ACTUATOR FOR SHORT TO B+** • Turn ignition switch to ON position • Test voltage at following climate control unit connector (12-pin) terminal. — Terminal 2K (FRESH signal) — Terminal 2I (RECIRCULATE signal) • Is voltage **approximately 12 V**?	Yes	Repair wiring harness between climate control unit and air intake actuator, then go to Step 14.
		No	Replace climate control unit, then go to Step 14.
12	**INSPECT BLOWER UNIT AIR INTAKE DOOR** • Is there any foreign material or obstruction in blower unit air intake door?	Yes	Remove obstruction, then go to Step 14.
		No	Go to next step.
13	**VERIFY THAT BLOWER UNIT AIR INTAKE DOOR IS POSITIONED SECURELY AND PROPERLY** • Is blower unit air intake door securely and properly positioned?	Yes	Inspect air intake door for cracks or damage, then go to next step.
		No	Install air intake door securely in proper position, then go to next step.
14	**VERIFY THAT MALFUNCTION SYMPTOM OCCURS AFTER REPAIR** • Does malfunction disappear?	Yes	Troubleshooting completed. Explain repairs to customer.
		No	Recheck malfunction symptoms, then repeat from Step 1 if malfunction recurs.

NO.7 AIR FROM VENTS COLD ENOUGH

A6E858001038W09

7	**Air from vents not cold enough.**
DESCRIPTION	• Magnetic clutch operates but A/C system malfunctions.
POSSIBLE CAUSE	• Drive belt malfunction (Step 2) • Malfunction in blower unit or condenser (Steps 4, 5) • Malfunction in receiver/drier or expansion valve (valve closes too much) (Steps 8, 9) • Malfunction in refrigerant lines (Steps 10, 11) • A/C compressor system malfunction, insufficient compressor oil (Steps 15, 16) • Over filling of compressor oil, malfunction in expansion valve or A/C unit air mix link system (Steps 17—19)

Diagnostic procedure

STEP	INSPECTION		ACTION
1	**INSPECT DRIVE BELT** • Inspect drive belt. (See B–3 DRIVE BELT INSPECTION) • Is it okay?	Yes	Go to next step.
		No	Adjust or replace drive belt, then go to Step 20.
2	**INSPECT REFRIGERANT SYSTEM PERFORMANCE** • Perform refrigerant system performance test. (See U–13 REFRIGERANT SYSTEM PERFORMANCE TEST) • Is operation normal?	Yes	Operation is normal. (Recheck malfunction symptoms.)
		No	Go to next step.

STEP	INSPECTION		ACTION
3	**CHECK TO SEE WHETHER MALFUNCTION IS IN BLOWER UNIT INTAKE AND CONDENSER OR ELSEWHERE** • Are refrigerant high-pressure and low-pressure values both high?	Yes	Go to next step.
		No	Go to Step 6.
4	**INSPECT BLOWER UNIT INTAKE** • Is blower unit intake clogged?	Yes	Remove obstruction, then go to Step 20. (If air does not reach evaporator within A/C unit, heat exchange does not occur and refrigerant pressure becomes high. Therefore, removal of obstruction is necessary.)
		No	Go to next step.
5	**INSPECT CONDENSER** • Inspect condenser. (See U–24 CONDENSER INSPECTION) • Is it okay?	Yes	Adjust refrigerant to specified amount, then go to Step 20. (Excessive amount of refrigerant.)
		No	Replace condenser, or repair and clean condenser fins, then go to Step 20.
6	**CHECK TO SEE WHETHER MALFUNCTION IS IN EXPANSION VALVE, RECEIVER/DRIER AND REFRIGERANT LINES OR ELSEWHERE** • Are refrigerant high-pressure and low-pressure values low?	Yes	Go to next step.
		No	Go to Step 14.
7	**CHECK TO SEE WHETHER MALFUNCTION IS IN EXPANSION VALVE AND RECEIVER/DRIER OR ELSEWHERE** • Immediately after A/C compressor operates, does refrigerant high-pressure value momentarily rise to correct value, then fall and stay below it? (Is there negative pressure on low-pressure side?)	Yes	Go to next step.
		No	Go to Step 10.
8	**CHECK TO SEE WHETHER MALFUNCTION IS IN EXPANSION VALVE OR RECEIVER/DRIER** • Turn A/C switch off and let air conditioner stop for **10 minutes**. • Start engine. • Turn both A/C switch and fan switch on. • Does malfunction occur after A/C compressor turns on?	Yes	Go to next step.
		No	Replace condenser and vacuum refrigerant line **more than 30 minutes** by vacuum pump, add refrigerant to specified level, then go to Step 20. (Since water has intermixed in receiver/drier and it is saturated, replacement is necessary.)
9	**VERIFY THAT EXPANSION VALVE HEAT-SENSING TUBE WITHIN A/C UNIT IS POSITIONED SECURELY AND CORRECTLY** • Is expansion valve heat-sensing tube within A/C unit securely installed in proper position?	Yes	Replace expansion valve, then go to Step 20. (Since valve closes too much, replacement is necessary.)
		No	Install heat-sensing tube securely in proper position, then go to Step 20.
10	**INSPECT REFRIGERANT LINES** • Inspect refrigerant lines. — Is piping free of damage and cracks? — Are piping connections free of oil grime? (Visual inspection) — Are piping connections free of gas leakage? — Are piping installation points on condenser free of gas leakage? — Are piping installation points on receiver/drier free of gas leakage? — Are piping installation points on A/C compressor free of gas leakage? — Are piping installation points on A/C unit free of gas leakage? — Perform gas leak inspection using gas leak tester. • Are above items okay?	Yes	Go to next step.
		No	If piping or A/C component(s) are damaged or cracked, replace them. Then go to Step 20. If there is no damage, go to Step 13.
11	**INSPECT EVAPORATOR PIPING CONNECTIONS IN A/C UNIT FOR GAS LEAKAGE** • Are piping connections for evaporator in A/C unit free of gas leakage?	Yes	If the vane makes a noise, add **10 ml {10 cc, 0.34 fl oz}** of compressor oil to the A/C compressor. Verify that the noise is no longer heard. Adjust refrigerant to specified amount, then go to Step 20.
		No	If piping is damaged or cracked, replace it. Then go to Step 20. If there is no damage, go to next step.

U

STEP	INSPECTION		ACTION
12	**INSPECT EVAPORATOR PIPING CONNECTIONS IN A/C UNIT FOR LOOSE** • Are piping connections for evaporator in A/C unit loose?	Yes	Tighten connections with specified torque, adjust both compressor oil and refrigerant to specified amount, then go to Step 20.
		No	If the vane makes a noise, add **10 ml {10 cc, 0.34 fl oz}** of compressor oil to the A/C compressor. Verify that the noise is no longer heard. Replace O-ring on piping, adjust refrigerant to specified amount, then go to Step 20.
13	**INSPECT PIPING CONNECTIONS FOR LOOSE** • Are piping connections loose?	Yes	Tighten connections with specified torque, adjust both compressor oil and refrigerant to specified amount, then go to Step 20.
		No	If the vane makes a noise, add **10 ml {10 cc, 0.34 fl oz}** of compressor oil to the A/C compressor. Verify that the noise is no longer heard. Replace O-ring on piping, adjust refrigerant to specified amount, then go to Step 20.
14	**CHECK TO SEE WHETHER MALFUNCTION IS IN EXPANSION VALVE, AIR MIX ACTUATOR AND COMPRESSOR OIL OR ELSEWHERE** • Does refrigerant high-pressure value hardly increase?	Yes	Go to next step. (Pressure hardly increases.)
		No	Go to Step 17.
15	**CHECK TO SEE WHETHER MALFUNCTION IS IN COMPRESSOR OIL AMOUNT AND A/C COMPRESSOR OR ELSEWHERE** • When engine is racing, does high-pressure value increase?	Yes	Return to Step 3.
		No	Go to next step.
16	**CHECK TO SEE WHETHER MALFUNCTION IS IN COMPRESSOR OIL AMOUNT OR A/C COMPRESSOR** • After compressor oil is replenished each **10 ml {10 cc, 0.34 fl oz}**, does high-pressure value increase?	Yes	Troubleshooting completed. (Explain to customer that cause was insufficient compressor oil.)
		No	Replace A/C compressor, then go to Step 20. (Cause is defective A/C compressor.)
17	**CHECK TO SEE WHETHER MALFUNCTION IS IN EXPANSION VALVE OR ELSEWHERE** • Is only refrigerant low-pressure value high?	Yes	Go to Step 19.
		No	Go to next step.
18	**VERIFY THAT AIR MIX IS INSTALLED SECURELY AND PROPERLY** • Are A/C unit air mix links, air mix cranks, and air mix rods securely and properly installed?	Yes	Set fan switch to 4th position. Turn A/C switch on. Set FRESH mode. Set temperature control to MAX COLD. Set VENT mode. (1)Start and run the engine at **1,500 rpm** for **10 minutes**. (2)Run the engine at idle for **1 minute**. (3)Within **12 seconds**, idle → **4,000 rpm** → idle. Perform cycle **5 times**. (4) Run the engine at idle for **30 seconds**. (5)Drain the compressor oil completely from the A/C compressor and verify the amount. • If there is **approximately 90 ml {90 cc, 3.0 fl oz}** of compressor oil, go to Step 20. • If there is **more than 90 ml {90 cc, 3.0 fl oz}** of compressor oil, remove surplus oil and fill A/C compressor with **90 ml {90 cc, 3.0 fl oz}** of compressor oil. Repeat Steps (1) to (5). (Cause is excessive amount of compressor oil.)
		No	Repair or install links, cranks and rods securely in proper position, then go to Step 20.
19	**VERIFY THAT EXPANSION VALVE HEAT-SENSING TUBE WITHIN A/C UNIT IS POSITIONED SECURELY AND CORRECTLY** • Is expansion valve heat-sensing tube within A/C unit securely installed in proper position?	Yes	Replace expansion valve, then go to next step. (Since valve opens too much, replacement is necessary.)
		No	Install heat-sensing tube securely in proper position, then go to next step.
20	**VERIFY THAT MALFUNCTION SYMPTOM OCCURS AFTER REPAIR** • Does cool air blow out? (Are results of refrigerant system performance test okay?)	Yes	Troubleshooting completed. Explain repairs to customer.
		No	Recheck malfunction symptoms, then repeat from Step 1 if malfunction recurs.

NO.8 NO COOL AIR

A6E858001038W10

8	No cool air
DESCRIPTION	• Magnetic clutch does not operate.
POSSIBLE CAUSE	• Malfunction in PCM A/C cut control system (Step 3) • Malfunction in climate control unit (Step 4) • Malfunction in refrigerant pressure switch (Steps 5, 7—9) • Malfunction in PCM (A/C signal) (Step 6) • Malfunction in PCM (IG1 signal) (Steps 10, 11) • Malfunction in A/C compressor (Step 12) • Malfunction in A/C relay (Steps 13—15) • Malfunction in evaporator temperature sensor (Step 16)

- When performing an asterisked (*) troubleshooting inspection, shake the wiring harness and connectors while performing the inspection to discover whether poor contact points are the cause of any intermittent malfunctions. If there is a problem, check to make sure connectors, terminals and wiring harnesses are connected correctly and undamaged.

Diagnostic procedure

STEP	INSPECTION		ACTION
1	**INSPECT AIR BLOW OUT** • Does air blow out?	Yes	Go to next step.
		No	Go to Step 1 of troubleshooting indexes No.1 and 2.
2	**INSPECT A/C COMPRESSOR OPERATION** • Start engine. • Turn A/C switch and fan switch on. • Does A/C compressor operate?	Yes	Go to Step 1 of troubleshooting index No.7.
		No	Go to next step.
3	**INSPECT FOR DTC IN PCM** • Inspect for DTCs related to the PCM on-board diagnostic system. • Are any DTCs displayed?	Yes	Go to appropriate inspection procedure.
		No	Go to next step.
4	**INSPECT TO SEE WHETHER MALFUNCTION IS IN CLIMATE CONTROL UNIT OR ELSEWHERE** • Does cool air blow out when terminal 1P of climate control unit connector (24-pin, A/C signal) is grounded?	Yes	Replace climate control unit, then go to Step 17.
		No	Release short, then go to next step.
5*	**INSPECT TO SEE WHETHER MALFUNCTION IS IN A/C SIGNAL CIRCUIT (BETWEEN REFRIGERANT PRESSURE SWITCH AND PCM) OR ELSEWHERE** • Test voltage at following terminal of refrigerant pressure switch. — Terminal B (A/C signal) • Is voltage **approximately 12 V**?	Yes	Go to Step 7.
		No	Go to next step.
6*	**INSPECT TO SEE WHETHER MALFUNCTION (LACK OF CONTINUITY) IS IN WIRING HARNESS (BETWEEN REFRIGERANT PRESSURE SWITCH AND PCM) OR PCM** • Test voltage at A/C signal terminal of PCM. • Is voltage **approximately 12 V**?	Yes	Repair wiring harness between PCM and refrigerant pressure switch, then go to Step 17.
		No	Inspect PCM, then go to Step 17.
7	**INSPECT TO SEE WHETHER MALFUNCTION IS IN REFRIGERANT PRESSURE SWITCH, REFRIGERANT AMOUNT, OR ELSEWHERE** • Does cool air blow out when terminals A and B of refrigerant pressure switch connector are shorted?	Yes	Go to Step 9.
		No	Go to next step.
8*	**INSPECT TO SEE WHETHER MALFUNCTION IS IN WIRING HARNESS (BETWEEN REFRIGERANT PRESSURE SWITCH AND CLIMATE CONTROL UNIT) OR ELSEWHERE** • Test voltage at following terminal of climate control unit. — Terminal 1P (24-pin, A/C signal) • Is voltage **approximately 12 V**?	Yes	Go to Step 10.
		No	Repair wiring harness between refrigerant pressure switch and climate control unit, then go to Step 17.

U

STEP	INSPECTION		ACTION
9	**INSPECT TO SEE WHETHER MALFUNCTION IS IN REFRIGERANT PRESSURE SWITCH OR REFRIGERANT AMOUNT** • Inspect refrigerant pressure switch. • Is it okay?	Yes	If refrigerant amount is empty, replace condenser, vaccum refrigerant line **more than 30 minutes** by vacuum pump, and add refrigerant to specified level, then go to Step 17.
		No	Replace refrigerant pressure switch, then go to Step 17.
10	**INSPECT TO SEE WHETHER MALFUNCTION (LACK OF CONTINUITY) IS IN A/C CONTROL SIGNAL CIRCUIT (BETWEEN A/C RELAY AND PCM) OR ELSEWHERE** • Does cool air blow out when terminal E of A/C relay connector (A/C control signal) is grounded?	Yes	Release short, then go to next step.
		No	Go to Step 12.
11*	**INSPECT TO SEE WHETHER MALFUNCTION (LACK OF CONTINUITY) IS IN PCM OR WIRING HARNESS (BETWEEN A/C RELAY AND PCM)** • Test voltage at the A/C relay control signal terminal of PCM. • Is voltage **approximately 12 V**?	Yes	Inspect PCM, then go to Step 17.
		No	Repair wiring harness between A/C relay and PCM, then go to Step 17.
12*	**INSPECT TO SEE WHETHER MALFUNCTION IS IN MAGNETIC CLUTCH OR ELSEWHERE** • Test voltage at the following terminal of magnetic clutch thermal protector. — Terminal A (magnetic clutch operation signal) • Is voltage **approximately 12 V**?	Yes	Inspect magnetic clutch, then go to Step 17.
		No	Go to next step.
13	**INSPECT FUSE** • Are A/C relay power supply fuses okay?	Yes	Go to next step.
		No	Replace fuse, then go to Step 17. If fuse burns out immediately, go to next step.
14	**INSPECT WIRING HARNESS BETWEEN FUSE BLOCK AND A/C RELAY FOR LACK OF CONTINUITY** • Test voltages at following terminals of A/C relay. — Terminal A (A/C relay control signal) — Terminal C (A/C control signal) • Are voltages **approximately 12 V**?	Yes	Go to next step.
		No	Repair wiring harness between fuse block and A/C relay, then go to Step 17.
15	**INSPECT TO SEE WHETHER MALFUNCTION IS IN A/C RELAY OR WIRING HARNESS (BETWEEN A/C RELAY AND MAGNETIC CLUTCH) AND EVAPORATOR TEMPERATURE SENSOR** • Test voltage at the following terminal of A/C relay. — Terminal D (magnetic clutch operation signal) • Is voltage **approximately 12 V**?	Yes	Inspect wiring harness between A/C relay and magnetic clutch. • If above wiring harness is OK, go to next step. • If above wiring harness malfunctions, repair wiring harness, then go to Step 17.
		No	Replace A/C relay, then go to Step 17.
16	**INSPECT EVAPORATOR TEMPERATURE SENSOR** • Inspect evaporator temperature sensor. • Is it okay?	Yes	Go to next step.
		No	Replace evaporator temperature sensor, then go to next step.
17	**CONFIRM THAT MALFUNCTION SYMPTOMS DO NOT RECUR AFTER REPAIR** • Does cool air blow out? (Are the results of refrigerant system performance test okay?)	Yes	Troubleshooting completed. Explain repairs to customer.
		No	Recheck malfunction symptoms, then repeat from Step 1 if malfunction recurs.

NO.9 NOISE WHILE OPERATING A/C SYSTEM

A6E858001038W11

9	**Noise while operating A/C system.**
DESCRIPTION	• Noise from magnetic clutch, A/C compressor, hose or refrigerant line.
POSSIBLE CAUSE	• Magnetic clutch operation noise (Step 4) • A/C compressor vane noise (Steps 5—13) • A/C compressor slippage noise (Steps 14—17) • Hose or refrigerant line interference noise (Step 18)

Diagnostic procedure

STEP	INSPECTION		ACTION
1	**CHECK A/C COMPRESSOR VANE NOISE** • Is there a jingling, popping, beeping, or buzzing sound (A/C compressor vane noise)?	Yes	Go to Step 5.
		No	Go to next step.
2	**INSPECT A/C COMPRESSOR SLIPPAGE NOISE** • Is there a squeaking or whirling sound (A/C compressor slippage noise)?	Yes	Go to Step 14.
		No	Go to next step.
3	**INSPECT A/C COMPRESSOR INTERFERENCE NOISE** • Is there a rattling or vibrating sound (interference noise)?	Yes	Go to Step 18.
		No	Go to next step.
4	**INSPECT MAGNETIC CLUTCH OPERATION NOISE** • Is there a clicking sound (magnetic clutch operation noise)?	Yes	Adjust clearance between pressure plate of magnetic clutch and A/C compressor pulley, then go to Step 19. (See U–38 MAGNETIC CLUTCH ADJUSTMENT)
		No	Condition is normal. (Recheck malfunction symptoms.)
5	**INSPECT A/C COMPRESSOR NOISE TIME** • Is noise heard continuously for **more than 3 seconds** after A/C compressor comes on?	Yes	Go to next step.
		No	Condition is normal. (Noise occurs for **2—3 seconds** immediately after A/C compressor turns on.)
6	**INSPECT IDLE SPEED** • Inspect idle speed. (See F–8 IDLE SPEED INSPECTION) • Is it okay?	Yes	Go to next step.
		No	Follow the repair instruction described in section F, then go to Step 19.
7	**INSPECT REFRIGERANT AMOUNT** • Inspect refrigerant amount. • Is it okay?	Yes	Go to Step 10.
		No	Go to next step.
8	**INSPECT REFRIGERANT LINES** • Inspect refrigerant lines. — Is piping free of damage and cracks? — Are piping connections free of oil grime? (Visual inspection) — Are piping connections free of gas leakage? — Are piping installation points on condenser free of gas leakage? — Are piping installation points on receiver/ drier free of gas leakage? — Are piping installation points on A/C compressor free of gas leakage? — Are piping installation points on A/C unit free of gas leakage — Perform gas leak inspection using gas leak tester. • Are above items okay?	Yes	Go to next step.
		No	If piping or A/C component(s) is damaged or cracked, replace then go to Step 19. If there is gas leakage, repair or replace connection and replace condenser*, then go to Step 19.
9	**INSPECT EVAPORATOR PIPING CONNECTIONS IN A/C UNIT FOR GAS LEAKAGE** • Are piping connections for evaporator in A/C unit free of gas leakage?	Yes	Adjust refrigerant amount to specified level, then go to Step 19.
		No	If piping is damaged or cracked, replace then go to Step 19. If there is gas leakage, repair or replace connection and replace condenser*, then go to Step 19.
10	**CHECK TO SEE WHETHER MALFUNCTION IS IN COMPRESSOR OIL OR ELSEWHERE** • Add **20 ml {20 cc, 0.8 fl oz}** of compressor oil. • Is noise heard when racing engine?	Yes	Go to next step.
		No	Troubleshooting completed. Explain repair to customer.
11	**CHECK TO SEE WHETHER MALFUNCTION IS IN A/C COMPRESSOR OR ELSEWHERE** • Drain compressor oil. • Is it contaminated with metal particles?	Yes	Go to next step.
		No	Replace A/C compressor, then go to Step 19.
12	**CHECK TO SEE WHETHER MALFUNCTION IS SOMEWHERE IN A/C SYSTEM OR ELSEWHERE** • Is compressor oil whitish and mixed with water?	Yes	Replace entire A/C system (excluding heater), then go to Step 19.
		No	Go to next step.

U

STEP	INSPECTION		ACTION
13	**INSPECT A/C COMPRESSOR OIL** • Is compressor oil darker than normal and contaminated with aluminum chips?	Yes	Replace A/C compressor and condenser, then go to Step 19. (Since A/C compressor may be worn and receiver/drier may be clogged, replacement of receiver/drier is necessary.)
		No	Condition is normal. Recheck malfunction symptoms.
14	**CHECK TO SEE WHETHER MALFUNCTION IS IN A/C COMPRESSOR OR ELSEWHERE** • Is noise heard immediately after A/C compressor is stopped?	Yes	Replace A/C compressor, then go to Step 19. (A/C compressor discharge valve left open)
		No	Go to next step.
15	**INSPECT DRIVE BELT** • Inspect drive belt. (See B–3 DRIVE BELT INSPECTION) • Is it okay?	Yes	Go to next step.
		No	Adjust or replace drive belt, then go to Step 19.
16	**INSPECT DRIVE BELT CONDITION** • Is drive belt worn? • Does it have foreign material imbedded in it, or have oil on it?	Yes	Remove obstruction, remove oil, or replace drive belt, then go to Step 19.
		No	Go to next step.
17	**INSPECT MAGNETIC CLUTCH** • Inspect magnetic clutch. (See U–38 MAGNETIC CLUTCH INSPECTION) • Is it okay?	Yes	Replace A/C compressor (excluding pressure plate, A/C compressor pulley, and stator), then go to Step 19.
		No	Replace magnetic clutch, then go to Step 19.
18	**CHECK TO SEE WHETHER MALFUNCTION IS IN A/C COMPRESSOR OR REFRIGERANT LINES** • Is noise emitted from A/C compressor?	Yes	Visually inspect A/C compressor, replace appropriate parts if necessary, then go to next step.
		No	If noise is due to refrigerant lines, repair detached or missing clips, tighten loose bolts, then go to next step.
19	**VERIFY THAT MALFUNCTION SYMPTOM OCCURS AFTER REPAIR** • Has A/C compressor noise stopped?	Yes	Troubleshooting completed. Explain repairs to customer.
		No	Recheck malfunction symptoms, then repeat from Step 1 if malfunction recurs.

* : If there is gas leakage, air enters into the A/C system. The desiccant within the receiver/drier absorbs the moisture from the air and becomes saturated. If the A/C system is used in this condition, the inside of the A/C compressor will begin to rust due to this moisture, which may cause lock up or noise to occur. Therefore, replacement of the receiver/drier is necessary.

TECHNICAL DATA

TECHNICAL DATA TD-2
ENGINE TD-2
LUBRICATION SYSTEM TD-2
COOLING SYSTEM TD-3
FUEL AND EMISSION CONTROL SYSTEMS . TD-3
ENGINE ELECTRICAL SYSTEM TD-4
CLUTCH TD-5
MANUAL TRANSAXLE TD-5
AUTOMATIC TRANSAXLE TD-5
FRONT AND REAR AXLE TD-6
STEERING SYSTEM TD-6
BRAKING SYSTEM TD-7
SUSPENSION TD-8
BODY ELECTRICAL SYSTEM TD-10
HEATER AND
AIR CONDITIONER SYSTEMS TD-10

TECHNICAL DATA

ENGINE

A6E931001001W01

Item			Engine		
			L8	LF	L3
MECHANICAL					
valve clearance	(mm {in} [Engine cold])	IN	0.22—0.28 {0.0087—0.0110}		
		EX	0.27—0.33 {0.0106—0.0130}		
Compression pressure	(kPa {kgf/cm^2, psi})	Standard	1,750 {17.8, 253} [300 rpm]	1,720 {17.5, 249} [300 rpm]	1,430 {14.6, 208} [290 rpm]
		Minimum	1,225 {12.492, 177.64} [300 rpm]	1,204 {12.277, 174.58} [300 rpm]	1,000 {10.197, 145.00} [290 rpm]
		Maximum difference between cylinders	196.1{2.0, 28}		
Cylinder head bolt length	(mm {in})	Standard	149.0—150.0 {5.86—5.90}		
		Minimum	150.5 {5.92}		
Pushing distance of the front oil seal	(mm {in})		0—0.5 {0—0.02} (from the edge of the engine front cover)		

LUBRICATION SYSTEM

A6E931001001W02

Note

- The maintenance intervals on scheduled maintenance table (See GI–33 SCHEDULED MAINTENANCE TABLE) can only be supported by the use of following oils.

Item		Engine		
		L8	LF	L3
Oil pressure	kPa {kgf/cm^2, psi} [rpm]	234—521 {2.39—5.31, 33.9—71} [3,000]		395—649 {4.03—6.61, 57.3—94.1} [3,000]
Oil capacity	Oil replacement (L {US qt, Imp qt})	3.9 {4.0, 3.4}		3.1 {3.3, 2.7}
	Oil and oil filter replacement (L {US qt, Imp qt})	4.3 {4.5, 3.8}		3.5 {3.7, 3.1}
	Total (dry engine) (L {US qt, Imp qt})	4.6 {4.8, 4.0}		4.2 {4.4, 3.6}

Recommended engine oil

Item		Market		
		European countries		Except European countries
Engine oil	Grade	API SJ ACEA A1 or A3	API SL ILSAC GF-3	API SG, SH, SJ, SL ILSAC GF-2, GF-3
	Viscosity (SAE)	5W-30	5W-20	40, 30, 20, 20W-20, 10W-30, 10W-40, 10W-50, 20W-40, 15W-40, 20W-50, 15W-50, 5W-20, 5W-30
	Remarks	Mazda genuine DEXELIA oil	—	—

COOLING SYSTEM

A6E931001001W03

Item			Engine			
			L8	LF		L3
Coolant capacity (L {US qt, Imp qt})			7.5 {7.9, 6.6}			
Radiator cap	Cap valve opening pressure (kPa {kgf/cm^2, psi})		113—142 {1.15—1.44, 16.4—20.6}			
Thermostat	Type		Wax, bottom-bypass			
	Initial-opening temperature (°C {°F})		80—84 {176—183}			
	Full-opening temperature (°C {°F})		90{194}			
	Full-open lift (mm {in})		8.0{0.32} min.			
Cooling fan	Type		Electrical			
	Blade	Number	Cooling fan No.1: 5, Cooling fan No.2: 7	(Except for Israel) Cooling fan No.1:5 Cooling fan No.2: 7	(For Israel) Cooling fan No.1:7 Cooling fan No.2: 5	Cooling fan No.1: 7, Cooling fan No.2: 5
		Outer diameter (mm {in})	300 {11.8}			320 {12.6}

FUEL AND EMISSION CONTROL SYSTEMS

A6E931001001W04

Item			Engine			
			L8	LF (ATX)	LF (MTX)	L3
Idle speed (rpm)			650—750 (700±50)	650—750 (700±50)	600—700 (650±50)	600—700 (650±50)
Ignition timing (BTDC°/rpm)			Approx. 10/700	Approx. 10/700	Approx. 10/650	Approx. 10/650
Idle-up speed	E/L ON		650—750 (700±50)	650—750 (700±50)	650—750 (700±50)	650—750 (700±50)
	A/C ON	refrigerant pressure switch (middle) OFF	700—800 (750±50)	650—750 (700±50)	700—800 (750±50)	700—800 (750±50)
		refrigerant pressure switch (middle) ON		700—800 (750±50)		
	P/S ON		700—800 (750±50)	650—750 (700±50)	650—750 (700±50)	650—750 (700±50)
CO concentration			Within the regulation			
HC concentration						
Fuel pressure (kPa {kgf/cm^2, psi}	Hold pressure		More than 408 {4.2, 59}	More than 408 {4.2, 59}	More than 408 {4.2, 59}	More than 408 {4.2, 59}
Fuel injector	Fuel leakage (drop/2 minutes)		Less than 1			
	Injection volume (ml {cc, fl oz}/15 sec.)		51—77 {51—77, 1.8—2.7}	64—84 {64—84, 2.3—3.0}	64—84 {64—84, 2.3—3.0}	73—96 {73—96, 2.6—3.3}
	Resistance (ohm) [20°C {68°F}]		11.4—12.6	11.4—12.6	11.4—12.6	11.4—12.6

TD

ENGINE ELECTRICAL SYSTEM

A6E931001001W05

Item					Engine		
					L8	LF	L3
Battery	Electrolyte gravity				1.27—1.29		
	Back-up current*1 (mA)				Max. 20		
	Market	European spec.			50D20L, 75D26L		50D20L, 80D26L
		GCC spec.			46B24LS	46B24LS, 75D26L*4	46B24LS
	Test load chart (A)	Battery type	46B24LS (36)		135		
			50D20L (48)		150		
			75D26L (52)		195		
			80D26L (55)		195		
	Slow charge (A)	Battery type (5-hour rate)	46B24LS (36)		3.5—4.5		
			50D20L (48)		4.0—5.0		
			75D26L (52)		5.0—6.0		
			80D26L (55)		5.5—6.5		
	Quick charge (A/30 min)	Battery type (5-hour rate)	46B24LS (36)		25		
			50D20L (48)		25		
			75D26L (52)		35		
			80D26L (55)		35		
Generator	Standard voltage (V)	Ignition switch ON	Terminal	B	B+		
				P	Below approx. 1		
				D	Approx. 0		
		Idle [20 °C {68 °F}]	Terminal	B	13—15		
				P	Approx. 3—8		
				D	*3		
	Generated current*2 (Reference) (A)	Engine speed (rpm)		1000	0—80		
				2000	0—90		
Ignition coil	Resistance [20 °C {68 °F}]	Primary coil (ohm)			0.49—0.57		
		Secondary coil (kilohm)			9.5—11.1		
		Insulation resistance of case (megohm)			Above 10		
High-tension lead	Resistance (kilohm)	No.1 lead			9.84—22.96		9.84—22.96
		No.2 lead					
		No.3 lead					
		No.4 lead					
Spark plug	Type	NGK			ITR6F—13		
Starter	No load test	Voltage (V)			11		
		Current (A)			Below 90		

*1 : Back-up current is the constant flow of current present (for the audio unit, clock, PCM, etc.) when the ignition switch is off and with the ignition key removed.
*2 : Must not be 0 A.
*3 : Turn the following electrical loads on and verify that the voltage reading increases.
—Headlights, blower motor, and rear window defroster
*4 : Intensely hot area

CLUTCH

A6E931001024W01

Item				Specification
Clutch pedal	Height (with carpet)		mm {in}	L.H.D.: 226—222 {8.50—8.74}
				R.H.D.: 229—235 {9.02—9.25}
	Free play	Pedal free play	mm {in}	1.0—3.0 {0.04—0.11}
		Push rod free play at clutch pedal	mm {in}	0.1—0.5 {0.004—0.02} (Reference value)
	Disengagement point	Disengagement stroke	mm {in}	20 {0.79} (Reference value)
		Pedal stroke	mm {in}	130.7 {5.15} (Reference value)
Clutch cover	Diaphragm spring fingers	Depth	mm {in}	0.6 {0.024}
		Misalignment	mm {in}	0.6 {0.024}
	Maximum clearance of flatness of the pressure plate		mm {in}	0.5 {0.020}
Clutch disc	Minimum thickness		mm {in}	0.3 {0.012}
	Run out limit		mm {in}	0.7 {0.028}
Flywheel	Run out limit		mm {in}	0.1 {0.004}

MANUAL TRANSAXLE

A6E931001024W02

Item			Specification
Manual transaxle type			G35M-R
Transaxle oil	Grade		API service GL-4 or GL-5
	Viscosity	All-season	SAE 75W-90
		Above 10 °C {50 °F}	SAE 80W-90
	Capacity	(L {US qt, Imp qt})	2.87 {3.03, 2.53}

AUTOMATIC TRANSAXLE

A6E931001024W03

Item				Specification
Transaxle type				FN4A-EL
ATF	Type			ATF M-V
Line pressure (kPa {kgf/cm^2, psi})		D, S, L range	Idle	330—470 {3.4—4.8, 48—68}
			Stall	1,160—1,320 {11.8—12.5, 168—191}
		R position	Idle	490—710 {5.0—7.2, 71—102}
			Stall	1,600—1,820 {16.3—18.6, 232—264}
Engine stall speed	(rpm)	D, S, L range		2,000—2,600
		R position		2,000—2,600
Time lag	(s)	N → D		0.4—0.7
		N → R		0.4—0.7
Transaxle range (TR) switch	(ohm)	P position		4,085—4,515
		R position		1,425—1,575
		N position		713—788
		D range		371—410
		S range		190—210
		L range		87—96
Transaxle Fluid temperature (TFT) sensor (kilohm)		ATF temperature: –20 °C {–4 °F}		236—324
		ATF temperature: 0 °C {32 °F}		84.3—110
		ATF temperature: 20 °C {68 °F}		33.5—42.0
		ATF temperature: 40 °C {104 °F}		14.7—17.9
		ATF temperature: 60 °C {140 °F}		7.08—8.17
		ATF temperature: 80 °C {176 °F}		3.61—4.15
		ATF temperature: 100 °C {212 °F}		1.96—2.24
		ATF temperature: 120 °C {248 °F}		1.13—1.28
		ATF temperature: 130 °C {266 °F}		0.87—0.98

Item			Specification
Input/turbine speed sensor (ohm)	ATF temperature: –40—160 °C {–40—320 °F}		250—600
Vehicle speedometer sensor (VSS) (V)			4.5—5.5
Solenoid valve (ohm)	ATF temperature: –40—150 °C {–40—302 °F}	Shift solenoid A	1.0—4.2
		Shift solenoid B	1.0—4.2
		Shift solenoid C	1.0—4.2
		Shift solenoid D	10.9—26.2
		Shift solenoid E	10.9—26.2
		Pressure control	2.4—7.3

FRONT AND REAR AXLE

A6E931001018W01

Item		Specification	
		ATX	MTX
FRONT AXLE			
Maximum wheel bearing play (mm {in})		0.05 {0.002}	
REAR AXLE			
Maximum wheel bearing play (mm {in})		0.05 {0.002}	
DRIVE SHAFT			
Shaft length (Air in boot at atmospheric pressure) (mm {in})	Left side	674.5—684.5 {26.56—26.94}	677.7—687.7 {26.67—27.07} (L8, LF), 676.6—686.6 {26.64—27.03} (L3)
	Right side	631.2—641.2 {24.86—25.24}	628.6—638.6 {24.75—25.14}

STEERING SYSTEM

A6E931001034W01

Item				Specification
ENGINE SPEED SENSING POWER STEERING				
Steering wheel	Play (mm {in})			0—30 {0—1.18}
	Effort (N·m {kgf·cm, in·lbf})			7.8 {80, 58} max.
Steering shaft	Length (mm {in})			211.6 {8.3}
Steering gear	Tie-rod end	Rotation torque (N·m {kgf·cm, in·lbf})		0.4—2.7 {3.5—27.5, 3.1—23.8}
		[Pull scale reading] (N {kgf, lbf})		3.4—25.5 {0.35—2.60, 0.8—5.7}
	Tie rod	Swinging torque (N·m {kgf·cm, in·lbf})		0.1—4.0 {1—40.7, 0.9—35.3}
		[Pull scale reading] (N {kgf, lbf})		0.6—24.5 {0.06—2.49 0.2—5.5}
	Steering rack	Runout (mm {in})	Large diameter portion	0.15 mm {0.006 in} max.
			Small diameter portion	0.20 mm {0.008 in} max.
Power steering oil pump	Oil pump fluid pressure (MPa {kgf·cm^2, psi})			10.80—11.29 {110.2—115.2, 1567—1637}
	Gear housing fluid pressure (MPa {kgf·cm^2, psi})			10.80—11.29 {110.2—115.2, 1567—1637}
Power steering system	Fluid	Type		ATF M-**III** or equivalent (e.g. Dexron®**II**)
		Capacity* (Approximate quantity) (L {US qt, Imp qt})		0.80 {0.85, 0.70} (MTX) 0.87 {0.92, 0.77} (ATX)

* : When reservoir tank is at maximum volume

BRAKING SYSTEM

A6E931001020W01

Item			Specification
CONVENTIONAL BRAKE SYSTEM			
Brake pedal	Brake pedal height	(mm {in})	R.H.D.: 172 {6.77} L.H.D.: 187 {7.36}
	Brake pedal play	(mm {in})	0 —3 {0—0.1}
	Pedal-to-floor clearance (Brake pedal when depressed at 588 N {60 kgf, 132 lbf})	(mm {in})	68 {2.7} min.
Power brake unit	Fluid pressure when pedal depressed at 200 N {20 kgf, 44 lbf} (kPa {kgf/cm^2, psi})	At 0 kPa {0 mmHg, 0 inHg}	590 {6.02, 85.6} min.
		At 66.7 kPa {500 mmHg, 19.7 inHg}	8,780 {89.53, 1,273} min.
Dual proportioning valve (without ABS)	Switching point	(kPa {kgf/cm^2, psi})	2,450 {25, 355} ±200 {2, 29}
	Rear wheel pressure when master cylinder pressure is 5,880 kPa {60 kgf/cm^2, 853 psi}	(kPa {kgf/cm^2, psi})	3,480 {35.5, 505} ±300 {3, 44}
Front disc brake	Minimum disc pad thickness	(mm {in})	2.0 {0.079}
	Minimum disc plate thickness	(mm {in})	22 {0.87}
	Disc plate runout limit	(mm {in})	0.05 {0.002}
Rear disc brake	Minimum disc pad thickness	(mm {in})	2.0 {0.079}
	Minimum disc plate thickness	(mm {in})	8 {0.31}
	Disc plate runout limit	(mm {in})	0.05 {0.002}
Brake fluid	Type		European (L.H.D. U.K.) specs.: SAE J1703, FMVSS 116 DOT3 OR DOT4 GCC specs.: SAE J1703, FMVSS 116 DOT3
PARKING BRAKE SYSTEM			
Parking brake lever	Lever stroke when pulled at 98 N {10 kgf, 22 lbf}	(notches)	3—6

SUSPENSION

A6E931001013W01

Suspension

Item			Specification
Front wheel alignment (Unloaded)*1	Maximum steering angle	Inner	39°±3°
		Outer	31°±3°
	Total toe-in	(mm {in})	Tire: 2±4 {0.08±0.16}, Rim inner: 1±3 {0.04±0.12}
		(degree)	0°11′±0°22′
	Caster angle*2 (Reference value)	normal	3°47′±1°
		height up*3	3°42′±1°
	Camber angle*2 (Reference value)	normal	–0°17′±1°
		height up*3	–0°10′±1°
	Steering axis inclination (Reference value)	normal	5°28′
		height up*3	5°18′
Rear wheel alignment (Unloaded)*1	Total toe-in	(mm {in})	Tire: 2±4 {0.08±0.16}, Rim inner: 1±3 {0.04±0.12}
		(degree)	0°11′±0°22′
	Camber angle*2	normal	–1°13′±1°
		height up*3	–1°05′±1°
	Thrust angle		0°±0°48′
Ball joint rotation torque	Front upper arm	(N·m {kgf·cm, in·lbf})	1.5 (15.0, 13.2) max.
	Front lower arm (front)		1.18—2.23 (12.12—2.7, 10.5—19.7)
	Front lower arm (rear)		1.00—2.22 (10.2—22.6, 8.86—19.6)
Front and rear stabilizer control link rotation torque		(N·m {kgf·cm, in·lbf})	0.23—0.47 (2.4—4.7, 2.1—4.1)

*1 : Fuel tank full. Engine coolant and engine oil are at specified level. Spare tire, jack, and tools are in designated position. Adjust to the median when carrying out wheel alignment.
*2 : Difference between left and right must not exceed 1° 30′.
*3 : Distance between wheel center and fender brim is following. Front: 402 mm {15.8 in} (reference value) Rear: 392 mm {15.4 in} (reference value)

Wheel and Tires

Item				Specification		
Standard tire and wheel						
Wheel	Size			15 × 6JJ	16 × 7JJ	17 × 7JJ
	Offset (mm {in})			50 {1.97}	55 {2.17}	
	Pitch circle diameter (mm {in})			114.3 {4.50}		
	Material			Steel	Aluminum alloy	
Tire	Size			195/65R15 91V	205/55R16 91V	215/45R17 87W
	Air pressure (kPa {kgf/cm^2, psi})	Front	Up to 4 persons	220 {2.2, 32}		
			Full load	240 {2.4, 35}		
		Rear	Up to 4 persons	220 {2.2, 32}		
			Full load	300 {3.1, 44}	270 {2.8, 39}	
	Remaining tread (mm {in})			1.6 {0.06}		
Wheel and tire	Wheel and tire runout (mm {in})		Radial direction	1.5 {0.06} max.		
			Lateral direction	2.5 {0.10} max.	2.0 {0.08} max.	
	Wheel imbalance (g {oz})			Knock-type*2: 9 {0.32} max.	Adhesive-type*1: 13 {0.46} max. Knock-type*2: 8 {0.28} max.	Adhesive-type*1: 11 {0.39} max. Knock-type*2: 7 {0.25} max.
Temporary spare tire						
Wheel	Size			15×4T		
	Offset (mm {in})			40 {1.57}		
	Pitch circle diameter (mm {in})			114.3 {4.50}		
	Material			Steel		
Tire	Size			T115/70 D15		
	Air pressure (kPa {kgf/cm^2, psi})			420 {4.2, 60}		
Wheel and tire	Wheel and tire runout (mm {in})		Radial direction	2.0 {0.08} max.		
			Lateral direction	2.5 {0.10} max.		

*1 : Total weight exceeds 160 g {5.65 oz}.
*2 : One balance weight: 60 g {2.12 oz} max. If the total weight exceeds 100 g {3.53 oz} on one side, rebalance after moving the tire around on the rim. Do not use 3 or more balance weights.

BODY ELECTRICAL SYSTEM

A6E931001047W01

Item					Specifications
Exterior light bulb capacity (W)	Headlight	Low beam	Halogen type		55 × 2
			Discharge type		35 × 2
		High beam			55 × 2
	Parking light				5 × 2
	Front fog light				55 × 2
	Front turn light				21 × 2
	Front side turn light				5 × 2
	Brake light/taillight				21/5 × 2
	Rear turn light				21 × 2
	Back-up light				18.4 × 2
	Rear fog light				21 × 1
	License plate light				5 × 2
	High-mount brake light	4SD	In-vehicle-type		18.4 × 1
			Rear spoiler type		4 × 1
		5HB			21 × 1
Interior light bulb capacity (W)	Front map light				5 × 2
	Rear map light				5 × 2
	Trunk compartment light				5 × 1
	Cargo compartment light				5 × 1
	Courtesy light				5 × 2
	Ignition key illumination				1.4 × 1
	Ashtray illumination				1.4 × 1
	Glove compartment light				1.7 × 1

HEATER AND AIR CONDITIONER SYSTEMS

A6E931001038W01

Item			Specification
REFRIGERANT SYSTEM			
Refrigerant	Type		R–134a
	Regular amount (g {oz})	L.H.D.	470 {16.6}
		R.H.D.	430 {15.2}
BASIC SYSTEM			
A/C compressor	Lubricating oil	Type	ATMOS GU10
		Sealed volume (ml {cc, fl oz})	120 {120, 4.06}
CONTROL SYSTEM			
Magnetic clutch	Clearance (mm {in})		0.3—0.5 {0.012—0.019}

SPECIAL TOOLS

SPECIAL TOOLS ST-2
ENGINE ST-2
LUBRICATION SYSTEM ST-2
COOLING SYSTEM ST-2
FUEL AND EMISSION CONTROL SYSTEMS .. ST-3
CLUTCH ST-3
MANUAL TRANSAXLE ST-3
AUTOMATIC TRANSAXLE ST-4
FRONT AND REAR AXLE ST-4
STEERING SYSTEM ST-6
BRAKING SYSTEM ST-7
SUSPENSION ST-8
BODY ST-8
BODY ELECTRICAL SYSTEM ST-9
HEATER AND AIR CONDITIONER SYSTEMS . ST-9

SPECIAL TOOLS

ENGINE

A6E941001001W01

Ford SST numbers are collated with Mazda SST numbers in the example below.
Ford SSTs are marked with Ford SST number.

Example

1:49 JE01 061 2:303-507 Peg 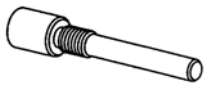

1: Mazda SST number
2: Ford SST number

49 L017 5A0 Support hanger set 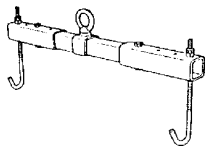	49 G017 5A0 Engine support set 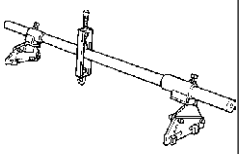	1:49 G032 354 2: – Adjusting wrench 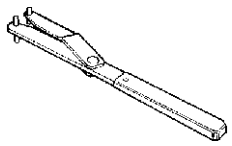
1:49 JE01 061 2:303–507 Peg 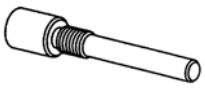	1:49 UN20 5072 2:205–072 Holder 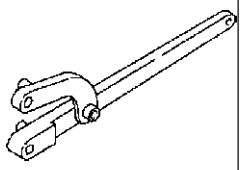	1:49 UN20 507202 2:205–072–02 Adapter 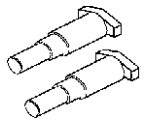
1:49 D032 316 2: – Protractor 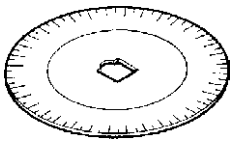	1:49 JE01 054 (Europe) 49 UN30 3376 (Except Europe) 2: 303–376 Plate 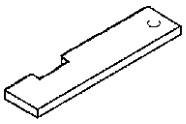	1:49 H010 401 2: – Oil seal installer 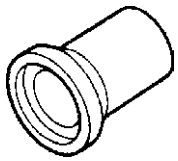

LUBRICATION SYSTEM

A6E941001001W02

49 0187 280A Oil pressure gauge 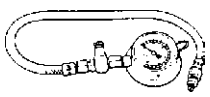	49 E019 001 Adapter 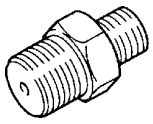	49 G032 354 Adjusting wrench 

COOLING SYSTEM

A6E941001001W03

WDS 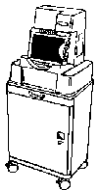	—	—

FUEL AND EMISSION CONTROL SYSTEMS

A6E941001001W04

49 B019 901B Oil Pressure Gauge 	49 N013 101A Body 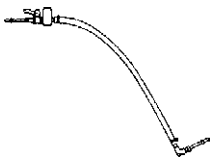	49 N013 102A Adapter Hose 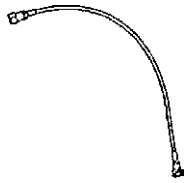
49 L018 001 O2 sensor wrench 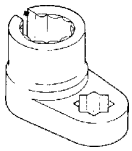	49 T042 001 Union wrench 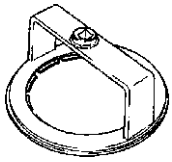	WDS 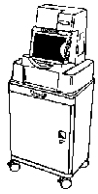

CLUTCH

A6E941001024W01

49 0259 770B Flare Nut Wrench 	49 SE01 310A Clutch Disc Centering Tool 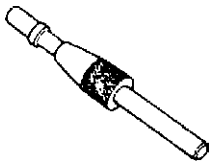	49 E011 1A0 Ring Gear Brake Set 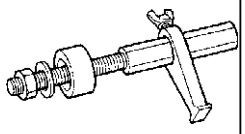

MANUAL TRANSAXLE

A6E941001024W02

49 G030 795 Oil Seal Installer 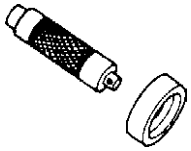	49 E017 5A0 Engine Support Set 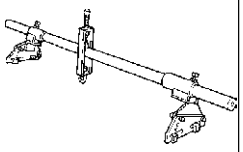	—

ST

AUTOMATIC TRANSAXLE

A6E941001024W03

49 H019 002 Adapter 	49 0378 400C Oil Pressure Gauge Set 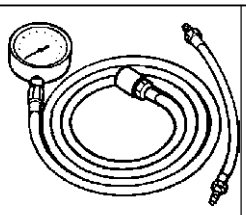	49 B019 901B Oil Pressure Gauge 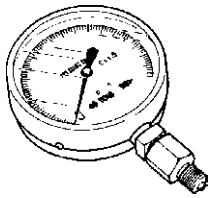
49 G030 795 Oil Seal Installer 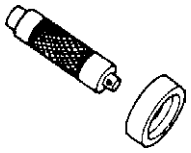	WDS 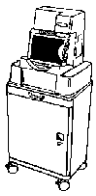	49 E017 5A0 Engine Support Set 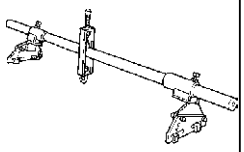
49 E011 1A0 Ring Gear Brake Set 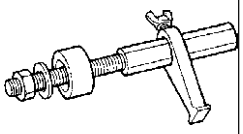	—	—

FRONT AND REAR AXLE

A6E941001018W01

49 0259 770B Flare Nut Wrench 	49 T028 3A0 Ball joint puller set 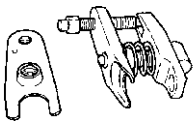	49 G030 455 Diff. side gear holder 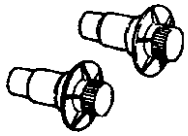
49 G033 105 Attachment 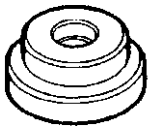	49 F026 103 Wheel hub puller 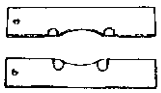	49 G033 102 Handle 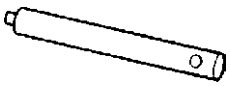
49 G033 106 Attachment ϕ80 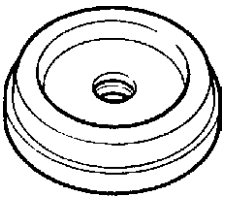	49 S033 101 Dust cover installer 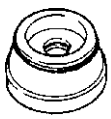	49 F027 009 Attachment ϕ 68 & 77 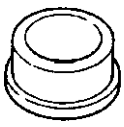
49 F027 004 Attachment ø 80 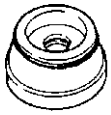	49 F027 003 Handle 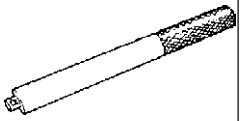	49 B025 006A Sensor rotor installer 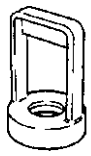

SPECIAL TOOLS

49 G026 105 Sensor rotor installer 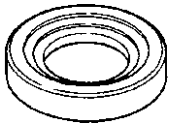	49 H027 002 Bearing remover 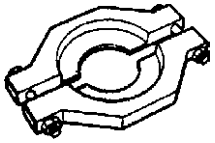	49 W034 301 Support block 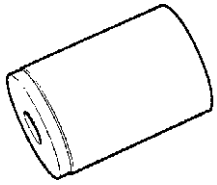
49 S231 626 Support block 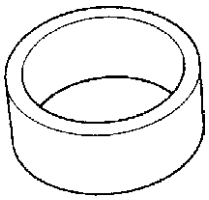	49 B014 001 Oil seal installer 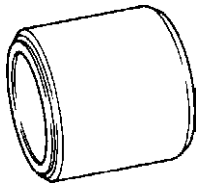	49 B025 004 Dust seal installer 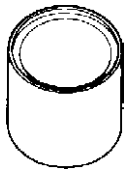
49 F027 005 Attachment ø62 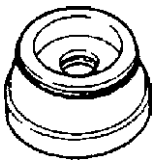	49 W027 003 Bearing installer 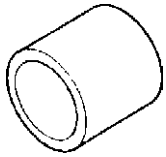	49 T025 001 Boot clamp crimper 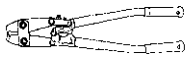

ST

STEERING SYSTEM

A6E941001034W01

49 1232 670B Power steering gauge set 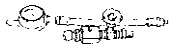	49 H002 671 Adapter 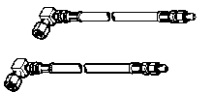	49 G032 3A4 Power steering gauge adapter set 
49 T028 3A0 Ball joint puller set 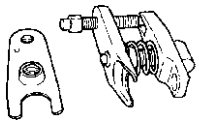	49 B032 320 Wrench 	49 B032 317 Bearing and oil seal remover 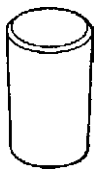
49 F032 303 Handle 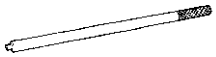	49 B032 323 Rod seal remover body 	49 N032 319A Support plate 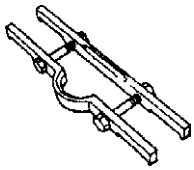
49 B032 326 Outer box protector 	49 T028 301 Support plate 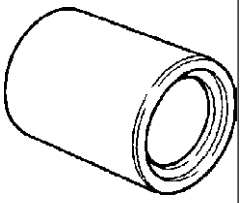	49 B032 324 Rod seal protector body 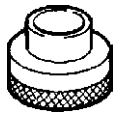
49 B032 325 Rod seal guide 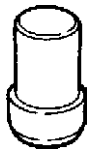	49 B032 331 Oil seal installer 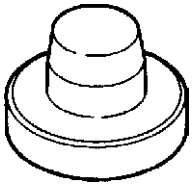	49 B001 797 Handle 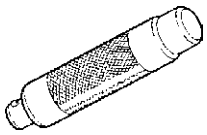
49 N032 320 Bearing installer 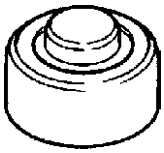	49 E032 305 Slipper seal protector 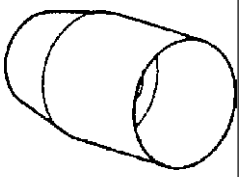	49 E032 306 Slipper seal former 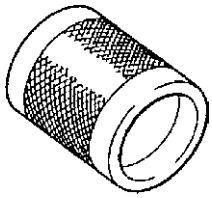
49 D032 316 Protractor 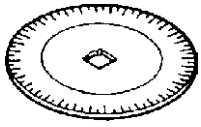	49 0180 510B Preload measuring attachment 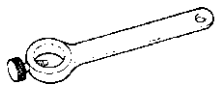	49 G032 3A1 Joint host set 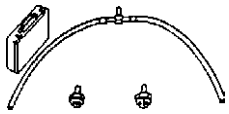
49 F032 301 Power steering pump hanger 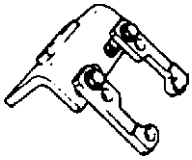	49 F032 3A2 Installer set 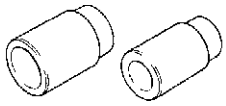	—

BRAKING SYSTEM

A6E941001020W01

49 0259 770B Flare nut wrench 	49 G066 001 Adapter harness 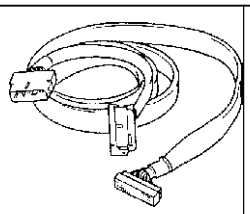	49 U043 0A0A Oil pressure gauge set 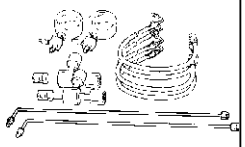
49 C066 001 Adapter harness 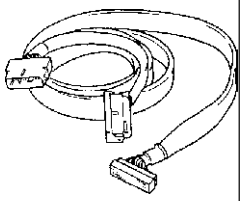	49 0221 600C Disc brake expand tool 	49 FA18 602 Disc brake piston wrench 
49 G043 001 Adjust gauge 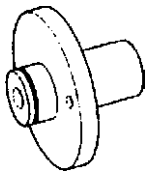	49 E043 003A Turning lock tool 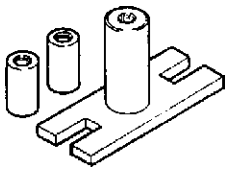	49 B043 004 Socket wrench 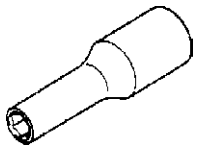
49 0208 701A Boot air out tool 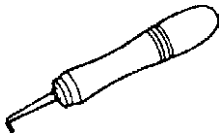	WDS 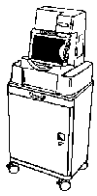	—

ST

SUSPENSION

A6E941001013W01

49 T034 1A0 Coil spring compressor set 	49 T034 101 Coil spring compressor 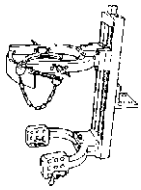	49 T034 105 Attachment 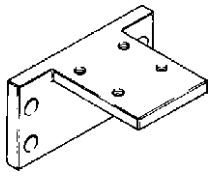
49 0107 680A Engine stand 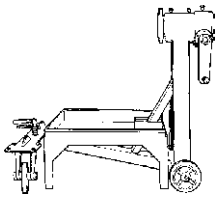	49 T028 3A0 Ball joint puller set 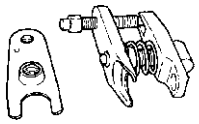	49 T034 202A Guide 
49 B034 216 Installer 	49 S120 620 Bearing installer 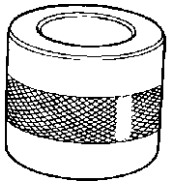	49 T034 203 Attachment 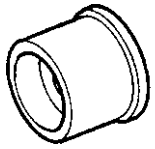
49 G030 797 Handle 	49 U034 204 Dust boot installer 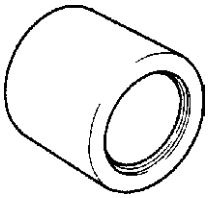	49 U027 005 Bearing installer 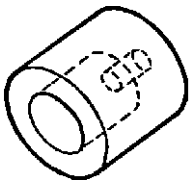
49 G026 103 Support block 	49 E017 5A0 Engine support set 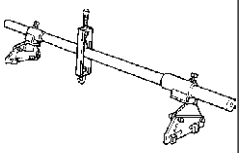	49 G033 102 Handle 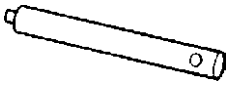
49 G033 106 Attachment 	49 W034 308 Puller and installer 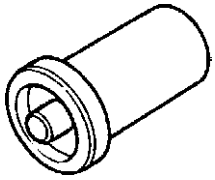	49 8038 785A Dust boot installer 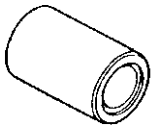

BODY

A6E941001047W01

49 0305 870A Window tool set 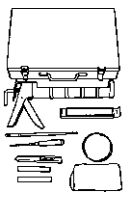	49 G050 1A0 Sealant remover 	—

BODY ELECTRICAL SYSTEM

A6E941001047W02

49 H066 002 Deployment tool 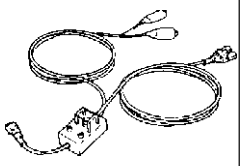	49 D066 002 Adapter harness 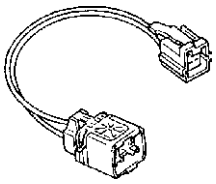	49 G066 003 Adapter harness 
49 L066 002 Adapter harness 	49 N088 0A0 Fuel and Thermometer checker 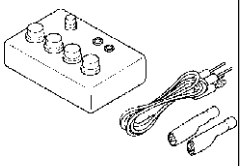	WDS 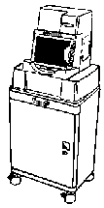

HEATER AND AIR CONDITIONER SYSTEMS

A6E941001038W01

49 C061 0A0B Gas Charge Set 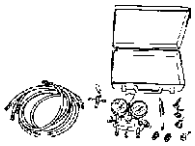	49 C061 012 Anti-Back Flow Valve 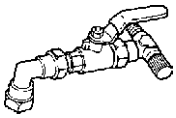	49 C061 013 Gas Leak Tester 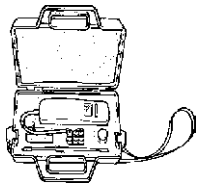
49 G061 001 Spring lock coupling disconnect tool 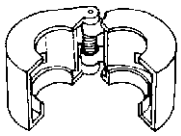	—	—