Engine

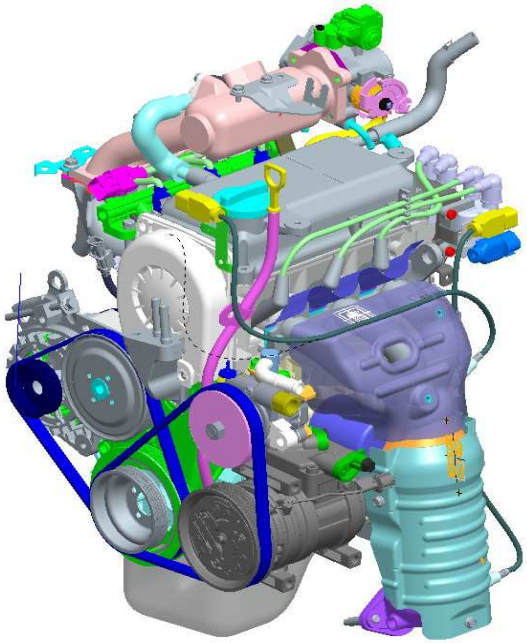

Copyright by Hyundai Motor Company. All rights reserved.

Simpo PDF Merge and Split Unregistered Version - http://www.simpopdf.com

PA - ENGINE

Application

Engine			T/M		Area		
Model	Volume [cc]	Performance [PS/kgf.m]	M/T	A/T	India	Europe	General
ε-1.1	1,086	64/9.9	M5EF2	A4CF0	●	●	●
U-1.1	1,120	75/15.5	M5CF1	-	-	●	-

- Epsilon 1.1L engine is already used for Santro(Atoz)
- Kappa 1.2L engine, which is newly developed, will be applied in 2008.
- Common Rail U-1.1L engine is only for EU market with manual transaxle.
- Common Rail U-1.1L engine has 3 cylinders

Simpo PDF Merge and Split Unregistered Version - http://www.simpopdf.com

Epsilon Engine

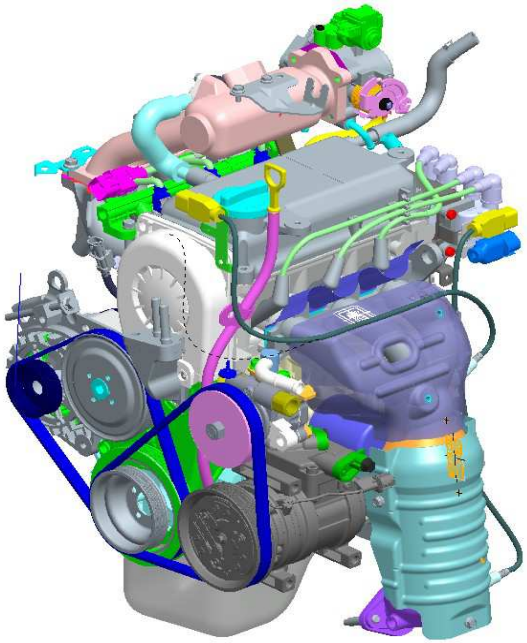

Simpo PDF Merge and Split Unregistered Version - http://www.simpopdf.com

Copyright by Hyundai Motor Company. All rights reserved.

PA - ENGINE

Epsilon engine

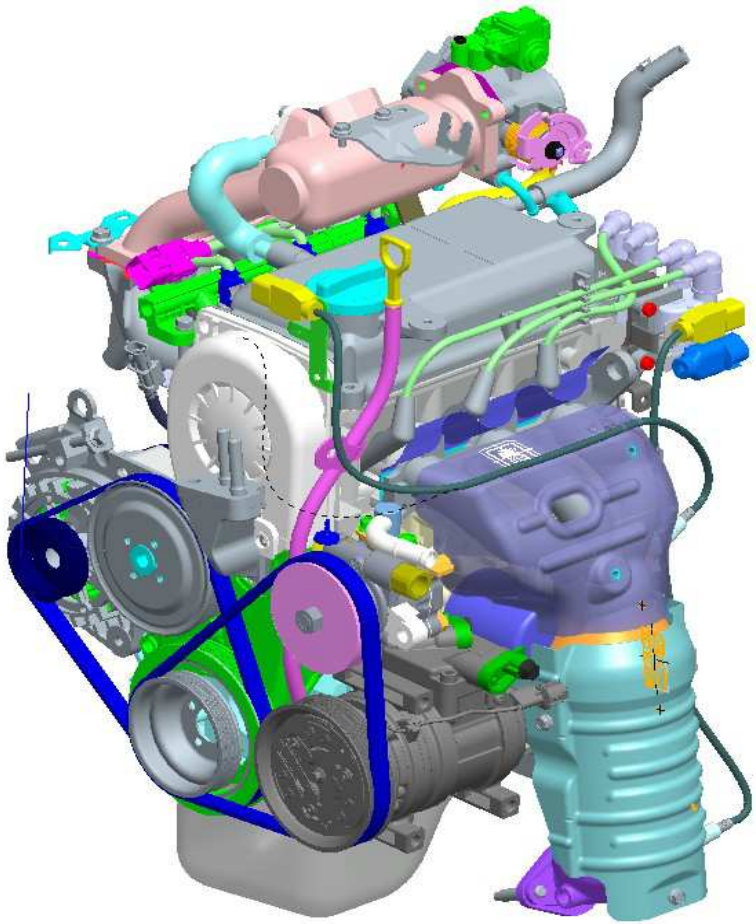

Engine	ε-1.1
Displacement (cc)	1086
Max. Power (PS / RPM)	64 / 5,500
Max. Torque (kgf·m / RPM)	9.8 / 2,800
Feature	• SOHC In-line 4 cylinders (12 valves) • One Timing Belt • DLI • BOSCH PCM • Return-less fuel system • ROSA type ISA

Simpo PDF Merge and Split Unregistered Version - http://www.simpopdf.com

Tightening Torque

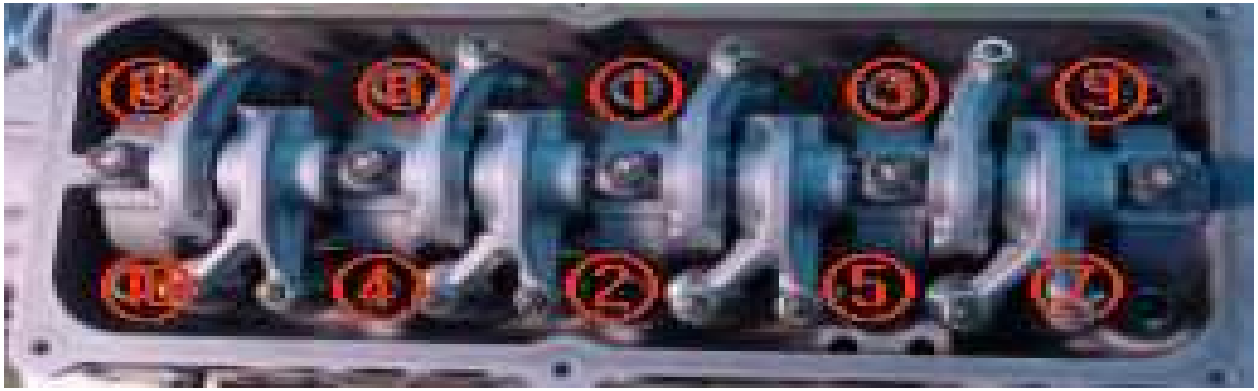

-When cold : 60 ~ 70 Nm

-When hot : 70 ~ 75 Nm

Traditional torque method is used. To keep proper installation, mentioned torque should be tightened with right procedure.

Simpo PDF Merge and Split Unregistered Version - http://www.simpopdf.com

Rocker Arm

■ Adjustment Specification

	Intake	Exhaust
Standard Clearance (Intake, mm)	0.2	0.25
Standard Clearance (Exhaust, mm)	0.1	0.17

No.1's TDC

Simpo PDF Merge and Split Unregistered Version - http://www.simpopdf.com

Camshaft

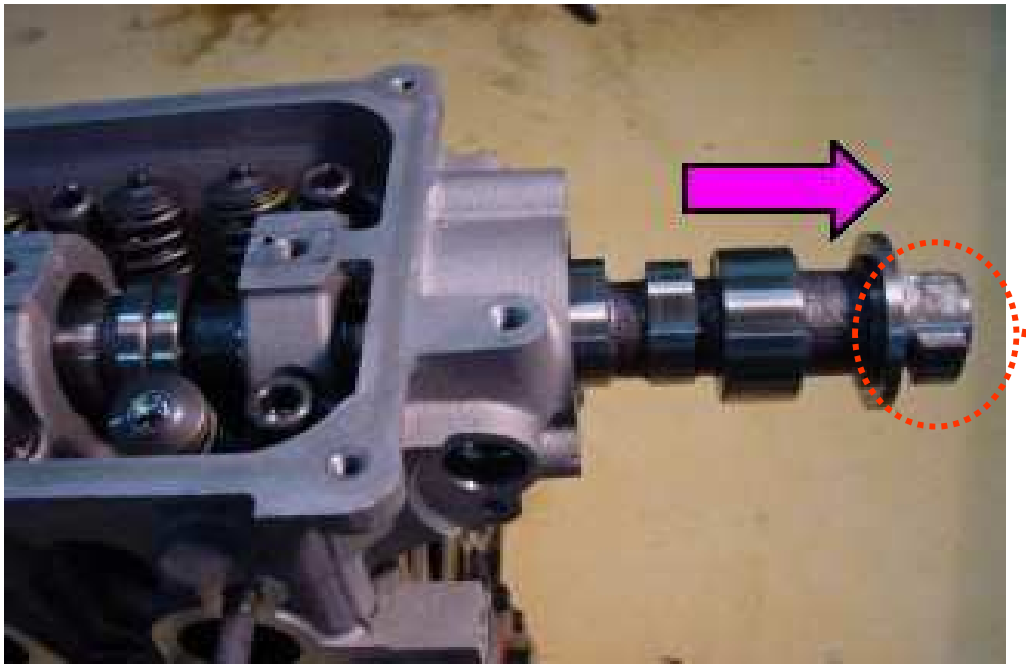

■ **Target Wheel**

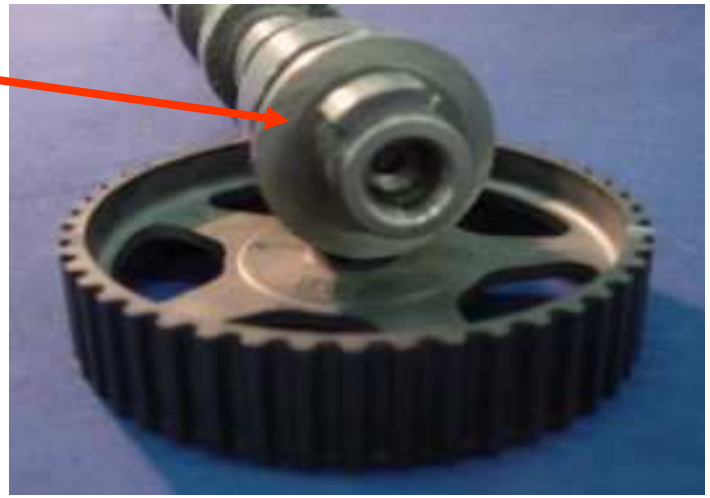

Be sure to remove camshaft from front side to rear side(fly wheel side).

Simpo PDF Merge and Split Unregistered Version - http://www.simpopdf.com

Piston

■ **Upside Mark**

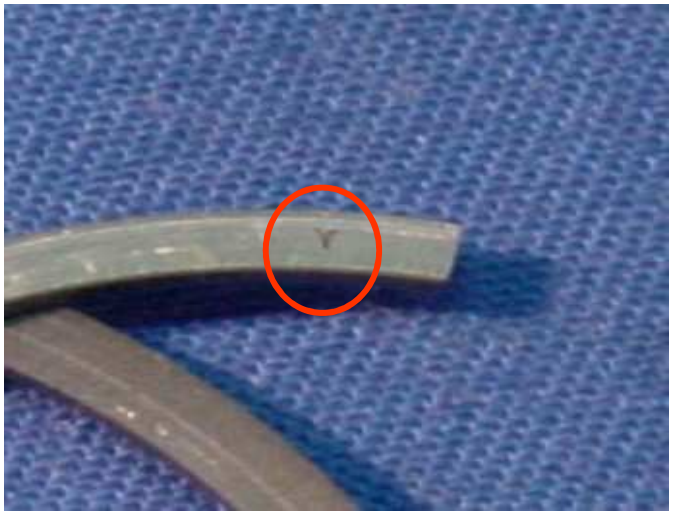

Top ring and second ring have unique up side mark. Be sure to keep this mark when you assemble piston ring to piston.

To assemble piston pin to piston SST(09324-33001) is needed.

Simpo PDF Merge and Split Unregistered Version - http://www.simpopdf.com

Timing

Simpo PDF Merge and Split Unregistered Version - http://www.simpopdf.com

Inlet Cooling System

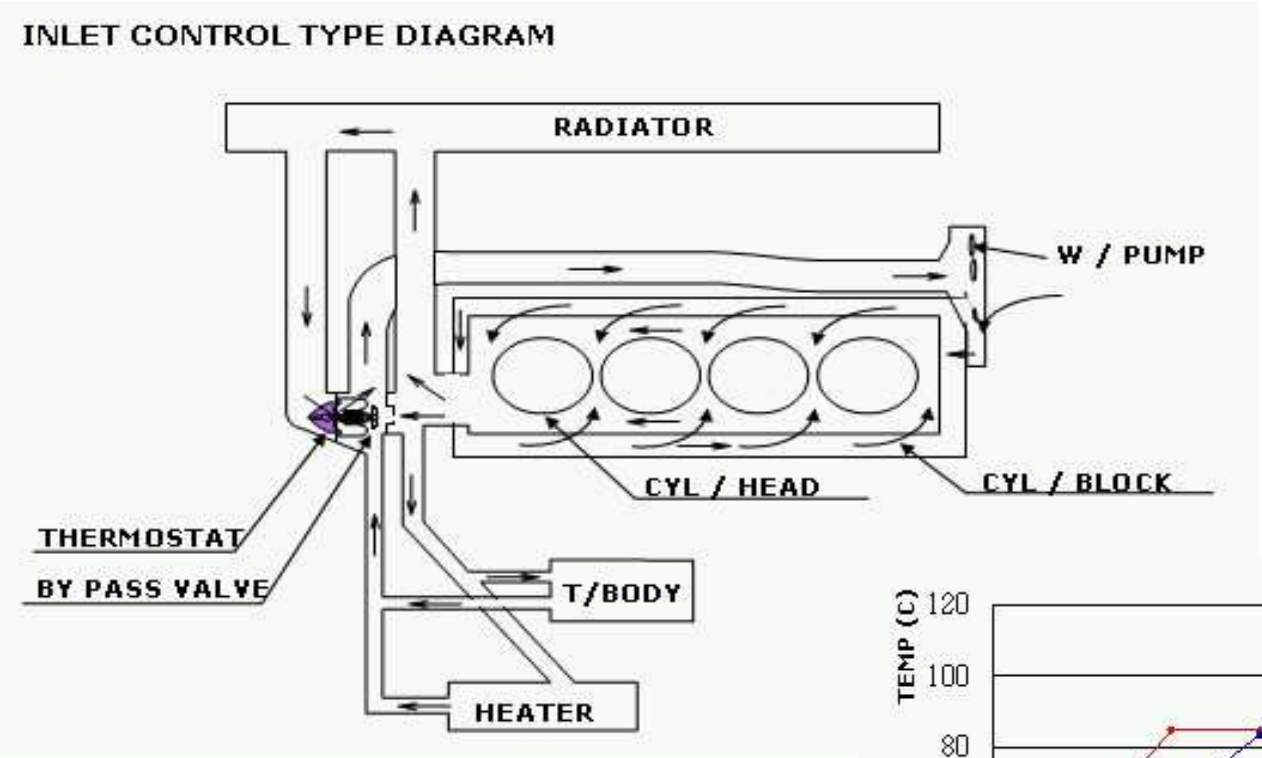

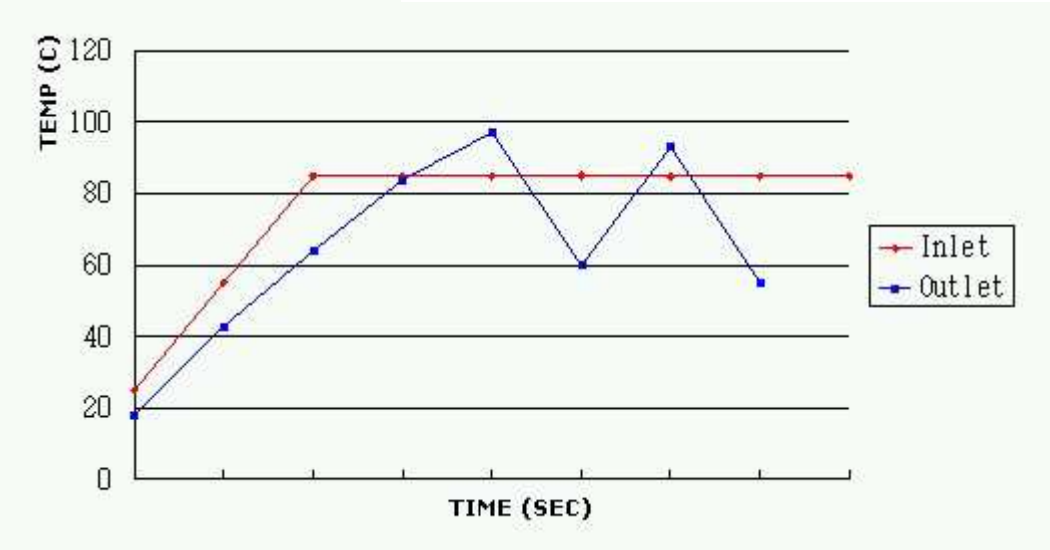

Thermostat opening temperature is 82℃.
When it fully opens, it becomes 95℃.

Simpo PDF Merge and Split Unregistered Version - http://www.simpopdf.com

Oil Pump and Oil Pressure Switch

At engine idle condition after warm up, normally oil pressure reaches 147kpa(1.5kg/㎠)

Oil pressure switch is screwed near engine oil filter. When the oil pressure goes down less than 0.5kg/㎠, oil pressure warning lamp turns on.

Simpo PDF Merge and Split Unregistered Version - http://www.simpopdf.com

Return Less Fuel System (RLFS)

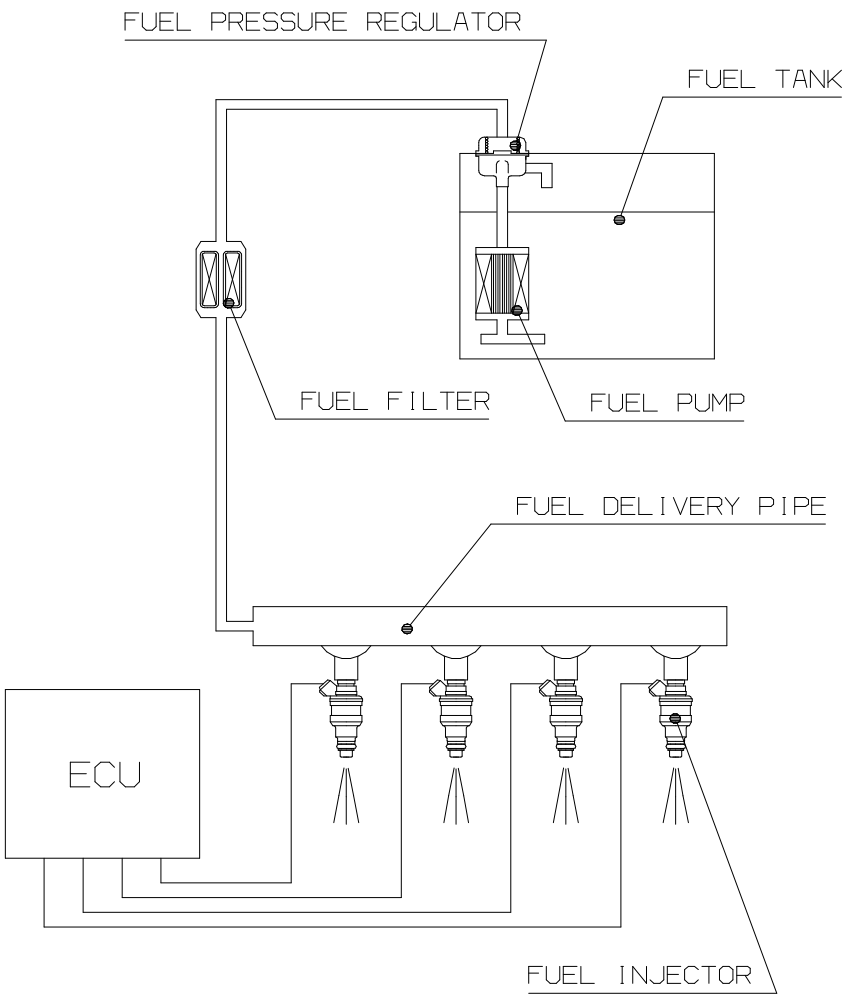

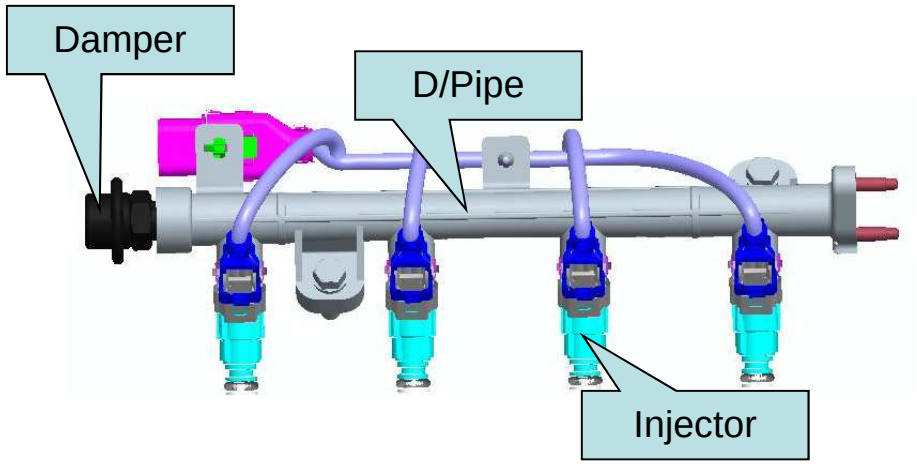

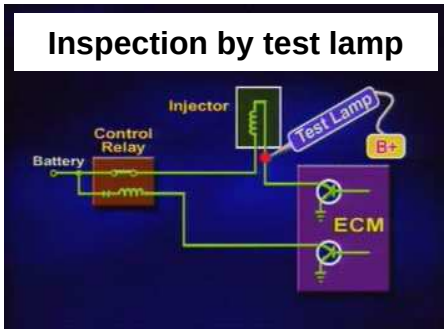

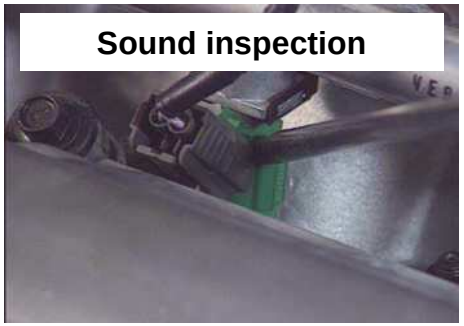

Simpo PDF Merge and Split Unregistered Version - http://www.simpopdf.com

Fuel Pump

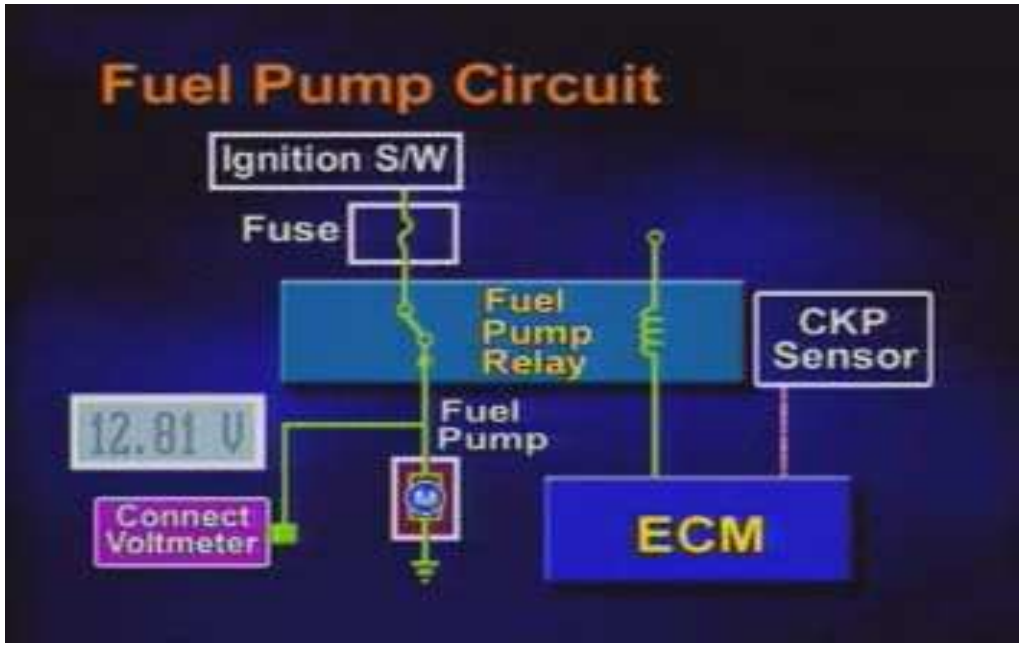

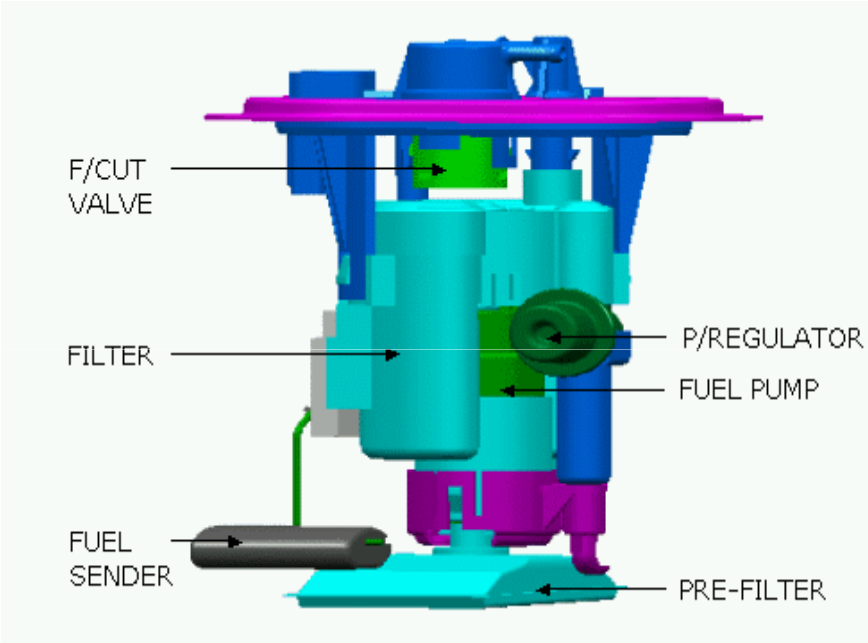

Simpo PDF Merge and Split Unregistered Version - http://www.simpopdf.com

Ignition Coil and Spark Plug

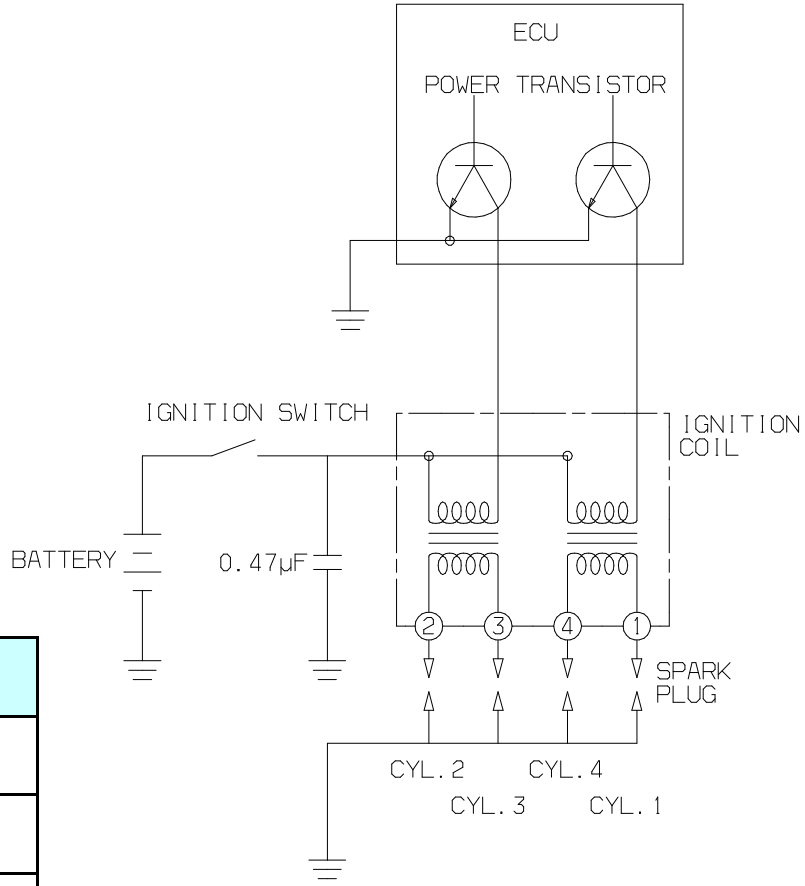

Item		Specification	
Ignition Coil	Type	Mold Dual Coil	
	Resistance	Primary	0.82Ω ±10%
		Secondary	15.5KΩ ±10%

Simpo PDF Merge and Split Unregistered Version - http://www.simpopdf.com

Input & Output

For European Market

INPUT

1. MAP & AIR TEMP. SENSOR
2. WATER TEMPERATURE SENSOR
3. THROTTLE POSITION SENSOR
4. CRANKSHAFT POSITION SENSOR
5. TDC SENSOR
6. KNOCK SENSOR
7. LAMBDA SENSOR(FR)
8. LAMDA SENSOR(RR)
9. ACCELERATION SENSOR
10. WHEEL SPEED SENSOR

⇨ E C U ⇨

OUTPUT

1. FUEL INJECTOR
2. IGNITION COIL
3. MAIN RELAY
4. FUEL PUMP RELAY
5. PURGE CONTROL VALVE
6. IDLE SPEED ACTUATOR

For General Market

INPUT

1. MAP & AIR TEMP. SENSOR
2. WATER TEMPERATURE SENSOR
3. THROTTLE POSITION SENSOR
4. CRANKSHAFT POSITION SENSOR
5. TDC SENSOR
6. KNOCK SENSOR (EXCEPT LOW OCTANE NATIONS)
7. LAMBDA SENSOR

⇨ E C U ⇨

OUTPUT

1. FUEL INJECTOR
2. IGNITION COIL
3. MAIN RELAY
4. FUEL PUMP RELAY
5. PURGE CONTROL VALVE
6. IDLE SPEED ACTUATOR

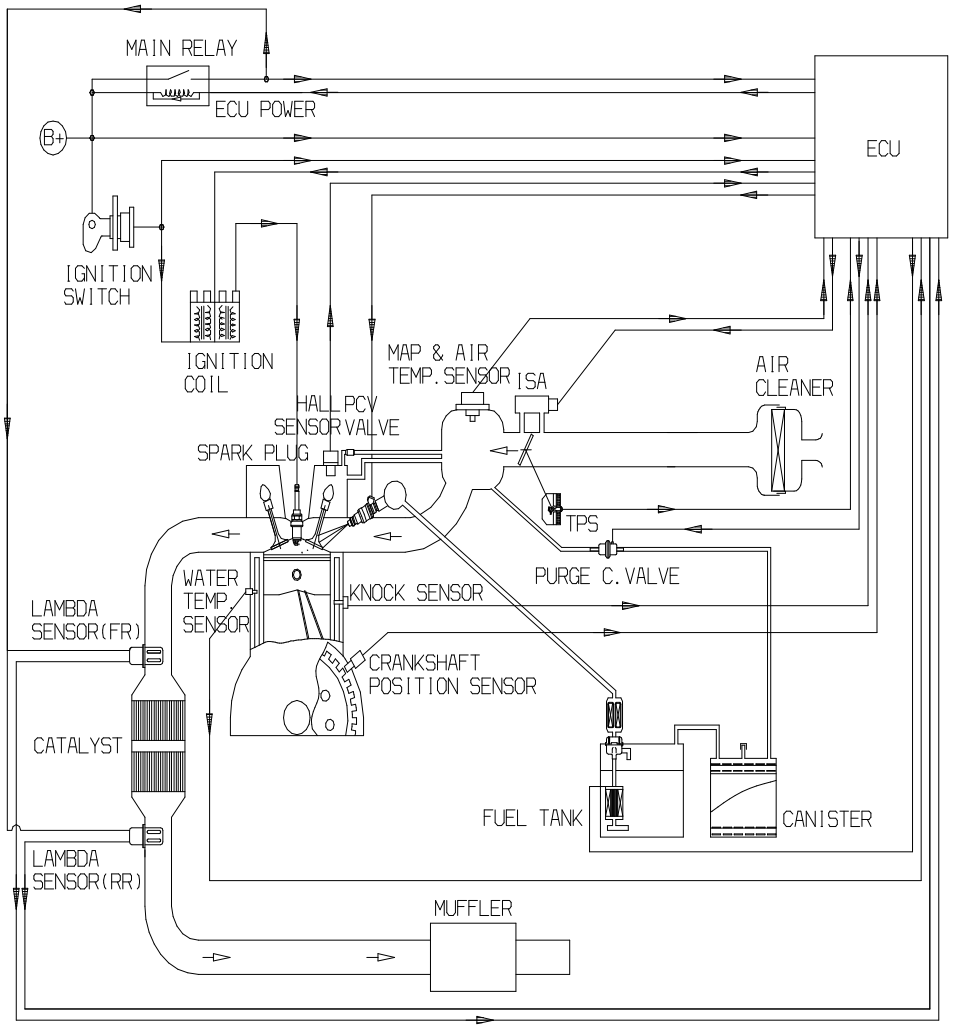

Simpo PDF Merge and Split Unregistered Version - http://www.simpopdf.com

Bosch M7.9.8

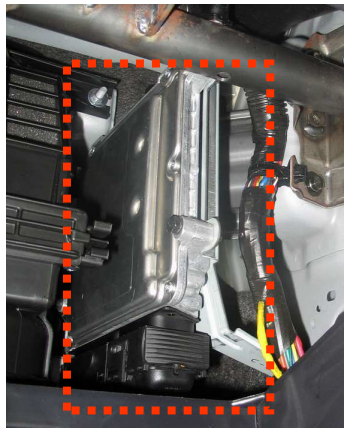

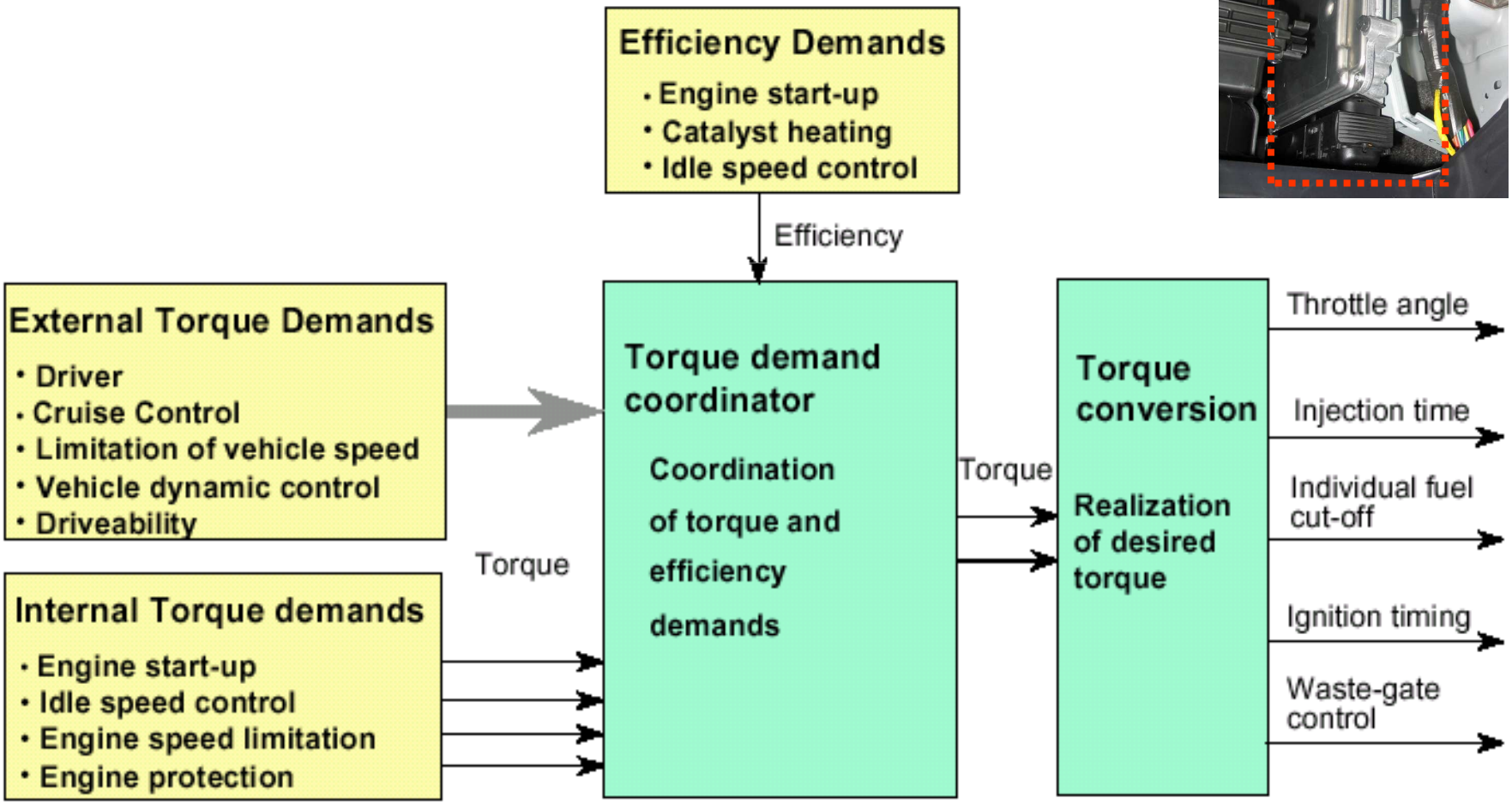

Simpo PDF Merge and Split Unregistered Version - http://www.simpopdf.com

T_MAP Sensor

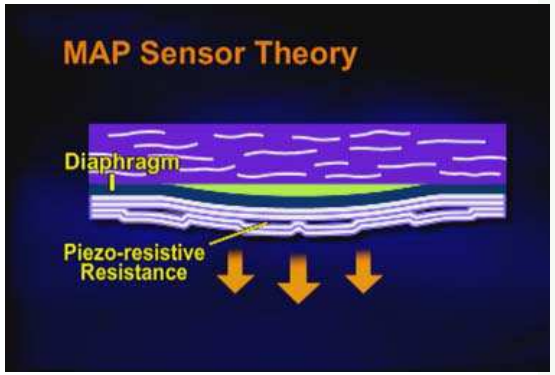

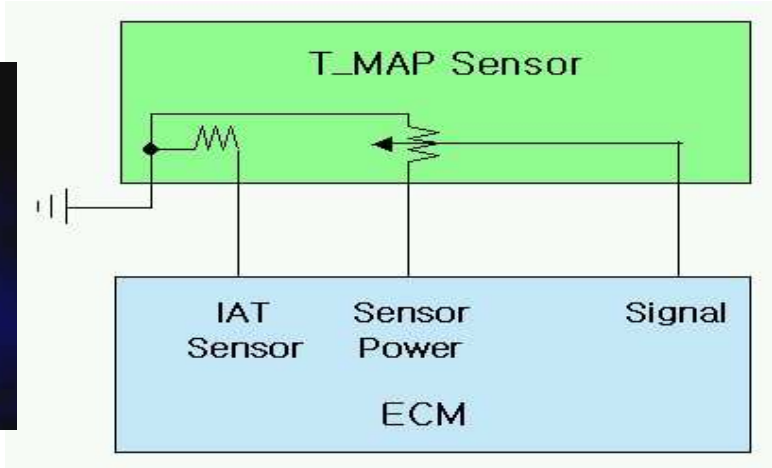

Intake air temperature sensor is integrated with T_MAP sensor. It produces 0.3 ~ 4.8 voltage range as signal.

At ignition on condition, it shows 3.8 ~ 4.2 V which is converted to atmospheric pressure.

Simpo PDF Merge and Split Unregistered Version - http://www.simpopdf.com

IAT Sensor

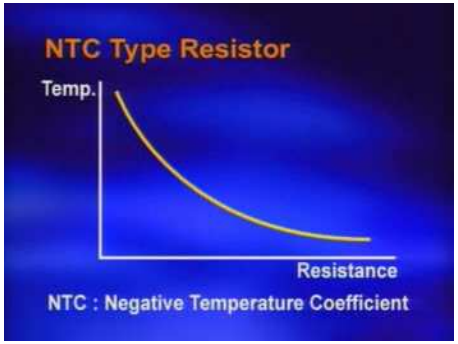

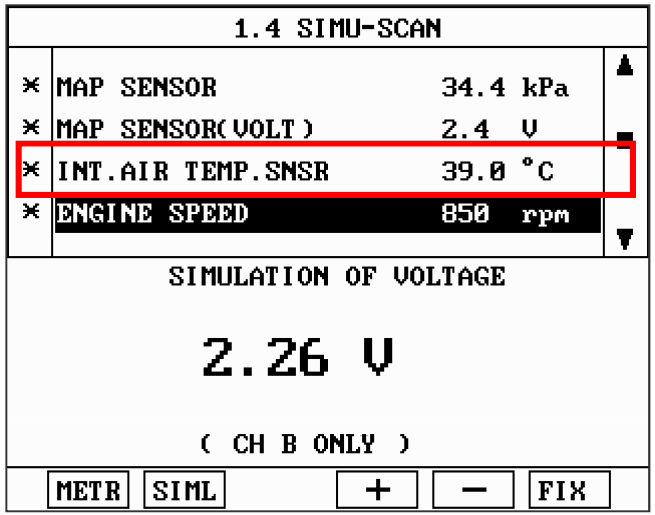

When IAT fault is detected, current data shows -40℃ an a default value.

Checking Condition	Temperature	Current Data	Remarks
IG On	0℃	4.0 ~ 4.4V	NTC type
	20℃	3.3 ~ 3.7V	
	40℃	2.5 ~ 2.9V	
	80℃	1.0 ~ 1.4V	

Simpo PDF Merge and Split Unregistered Version - http://www.simpopdf.com

TP Sensor (Lever type)

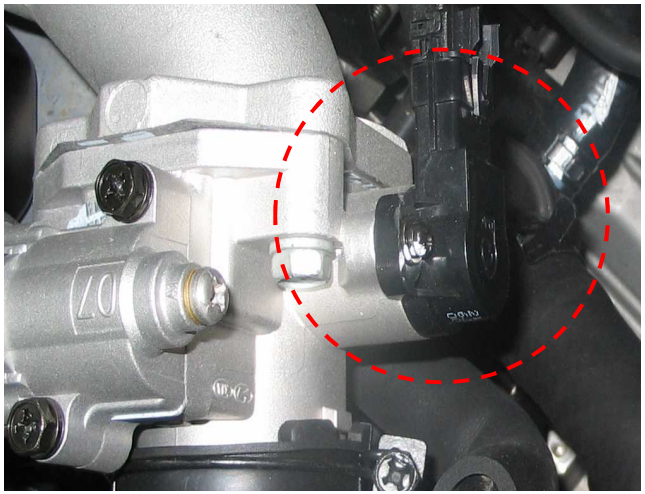

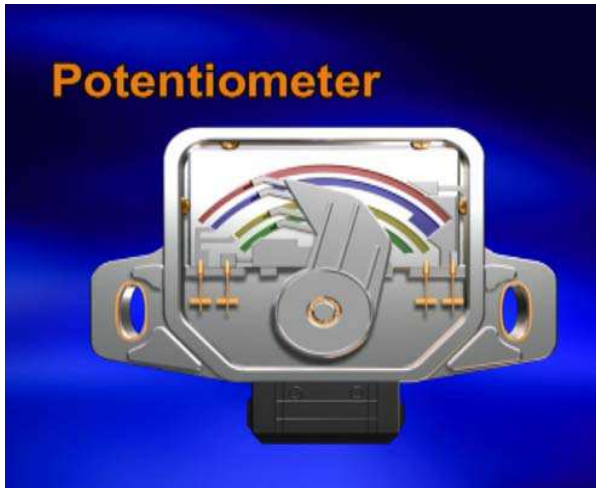

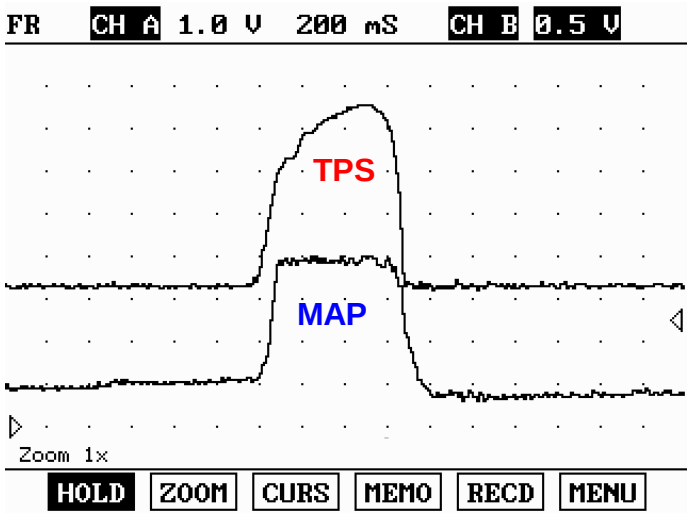

It's better check TPS waveform with MAP signal's together. Both signals are similar and signal trend has to be compared together.

Simpo PDF Merge and Split Unregistered Version - http://www.simpopdf.com

ECT Sensor

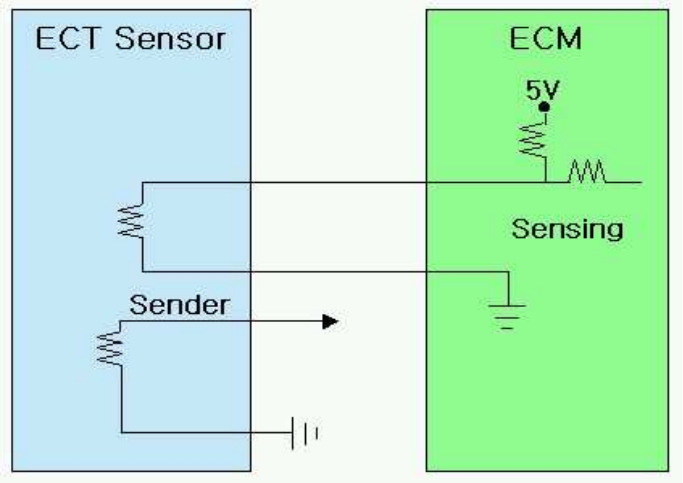

This sensor has 4 terminals. 2 are for ECT sensor. These two terminals are gold coated. Another 2 are for engine temperature indicator in cluster.

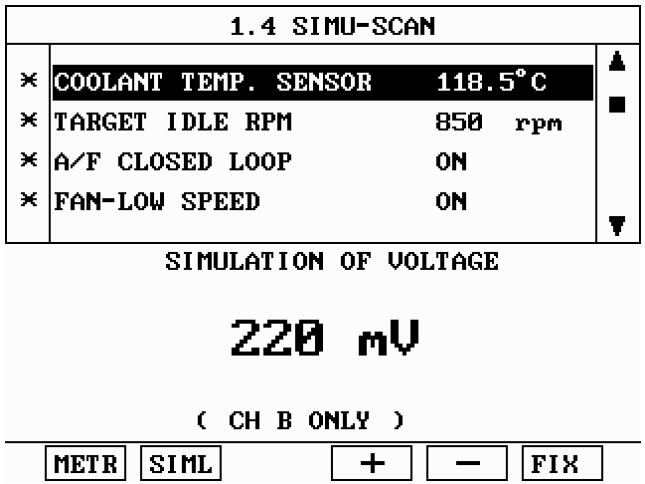

Checking Condition	Temperature	Current Data	Resistance (KΩ)
IG On	0℃	4.27±0.3V	5.18 ~ 6.60
	20℃	3.44 ±0.3V	2.27 ~ 2.73
	40℃	2.72±0.3V	1.059 ~ 1.281
	80℃	1.25±0.3V	0.298 ~ 0.322

Simpo PDF Merge and Split Unregistered Version - http://www.simpopdf.com

CKP Sensor

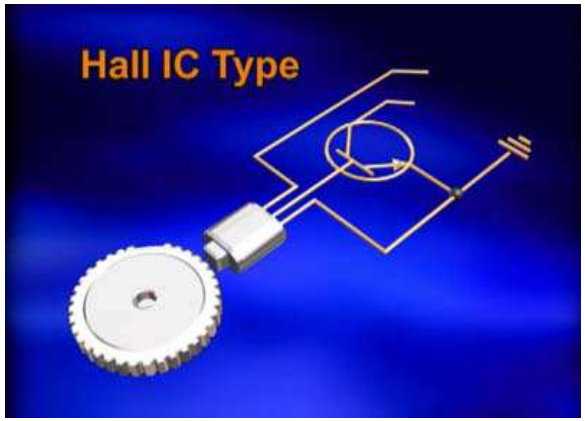

Hall IC type CKP sensor is used. ECM No. 15 is used for sensor signal.

Unlike other general target wheel which is composed with 60 teeth including 2 missing teeth, it has 30 teeth with 2 missing. Except tis tooth unit, all logical processing in ECM is the same

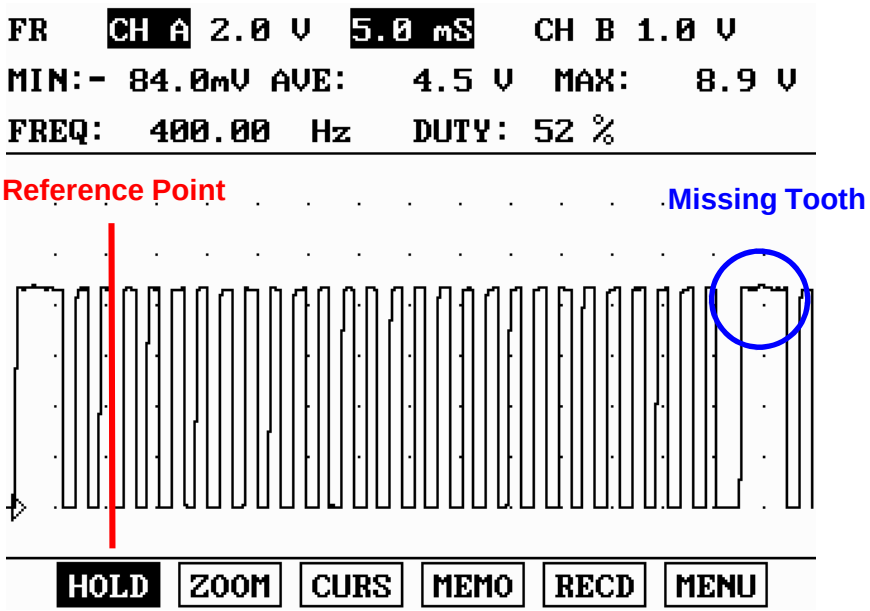

Simpo PDF Merge and Split Unregistered Version - http://www.simpopdf.com

CMP Sensor

CMP sensor is also used from Hall IC.

It distinguishes the cylinder No. by comparing with CKP sensor.

It is located near ignition coil. Camshaft target wheel shape is as shown on the picture.

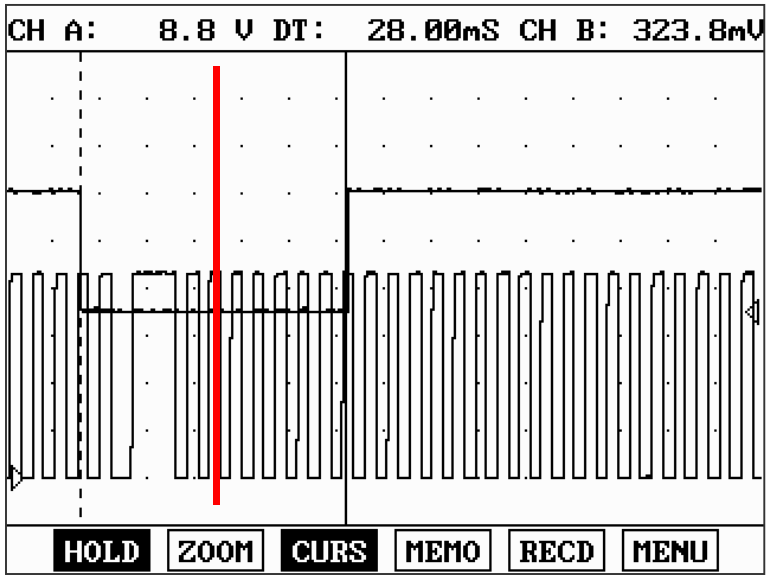

[CMP with CKP Sensor Waveform]

Simpo PDF Merge and Split Unregistered Version - http://www.simpopdf.com

Oxygen Sensor

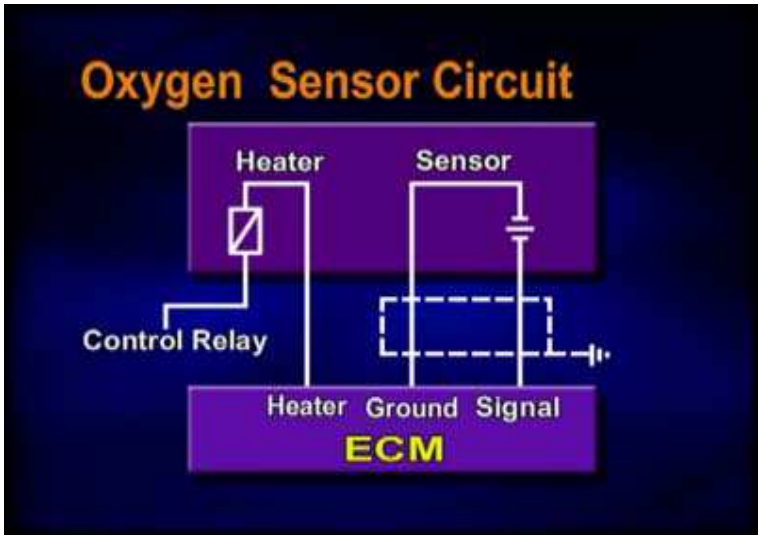

Zirconia type oxygen sensor is used.
The Zirconia oxygen sensor generates a small voltage depending on the exhaust gas condition.
The normal voltage range is 0.2 ~ 0.8 volts. 0.2 volts indicates a lean mixture and a voltage of 0.8v indicates a richer mixture.

Simpo PDF Merge and Split Unregistered Version - http://www.simpopdf.com

Knock Sensor

Engine knock control is used to constrain the knocking. Knock sensor detects knocking generated in engine and retard ignition timing.
The knock sensor is installed at between No2. and No.3 cylinder. Like other piezo type sensors, this is made by piezo material. Tightening torque is 20±5Nm.

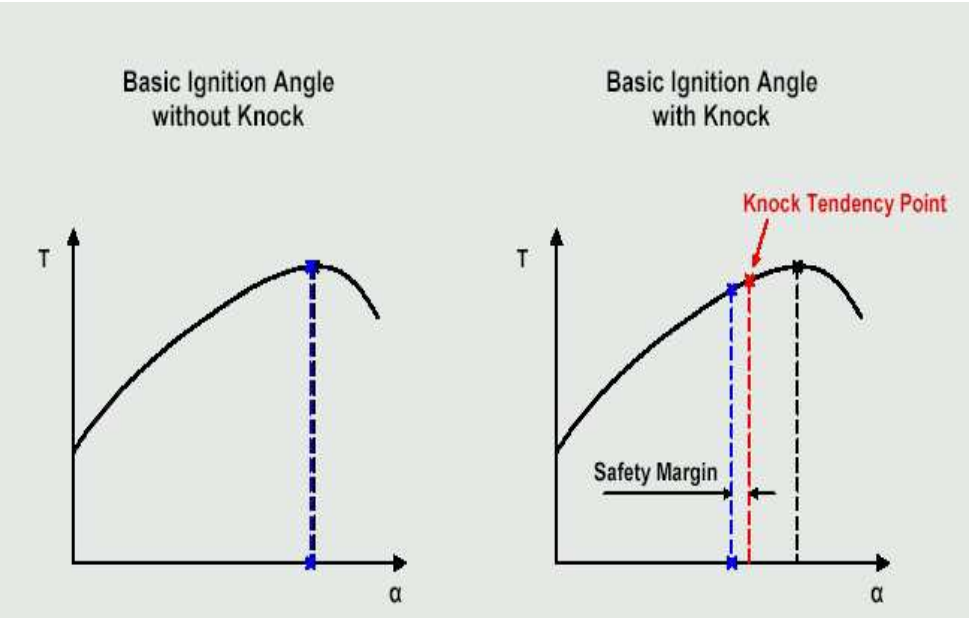

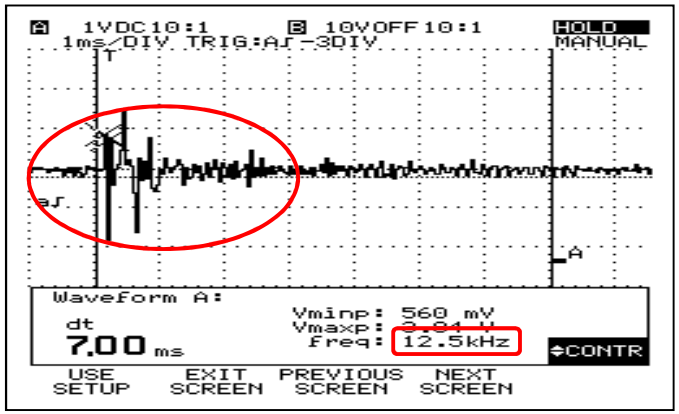

- Maximum Retard Limit : 12˚
- When knocking is detected : Initially retard 3˚ and increase step by step with 0.75˚

Simpo PDF Merge and Split Unregistered Version - http://www.simpopdf.com

Wheel Speed Sensor

The main role of wheel speed sensor is detecting the rough load condition which allows misfire monitoring inhibition (EOBD:Euro3/Euro4). When the vehicle is running on rough load condition, the CKP angular speed is affected from this road condition. It can signal to ECM as a misfiring. In this case wheel speed sensor detects this kind of rough load condition and order ECM not to consider this situation as a misfiring.

M/T		Input Variable	ECU PIN NO.
With EOBD	With ABS	ABS Signal	**K 64**
	Without ABS	Wheel Speed Sensor	**K 79, K 58 (K 64 open)**
Without EOBD	With ABS	Vehicle Speed Sensor	**K 64**
	Without ABS		**K 64**
AT		**Input Variable**	**PCM PIN NO.**
With EOBD	With ABS	ABS Signal	**K 20**
	Without ABS	Wheel Speed Sensor	**A 60, A 45**
Without EOBD	With ABS	From TCM	**K 20**
	Without ABS		**K 20**

Simpo PDF Merge and Split Unregistered Version - http://www.simpopdf.com

Vehicle Speed Sensor

- Vehicle speed sensor is applied on MT only.
- In the case of AT, the vehicle speed sensor is eliminated. Instead, ECM receives a corresponding vehicle speed from others. (refer to the table below)

T/M	Type		Vehicle speed from	ECU PIN NO.
MT	With EOBD	With ABS	ABS unit	**K64**
		Without ABS	Wheel Speed Sensor	**K79, K58 (K 64 open)**
	Without EOBD	With ABS	Vehicle Speed Sensor	**K64**
		Without ABS		
AT	With EOBD	With ABS	ABS unit	**K20**
		Without ABS	Wheel Speed Sensor	**K60, K45**
	Without EOBD	With ABS	From TCM	**K20(from A49)**
		Without ABS		

Simpo PDF Merge and Split Unregistered Version - http://www.simpopdf.com

ISA (Idle Speed Actuator)

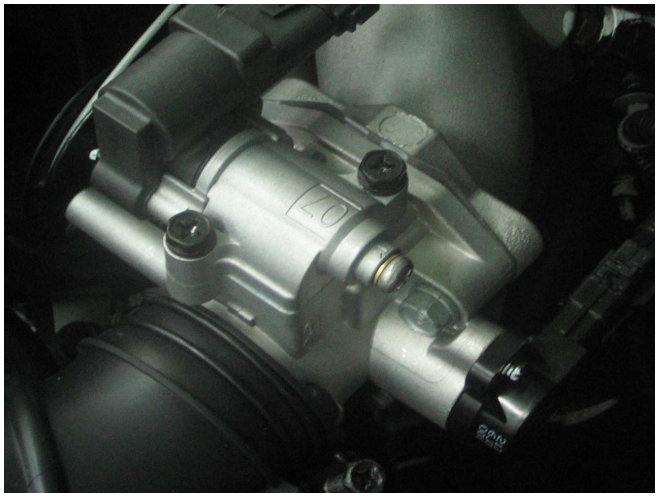

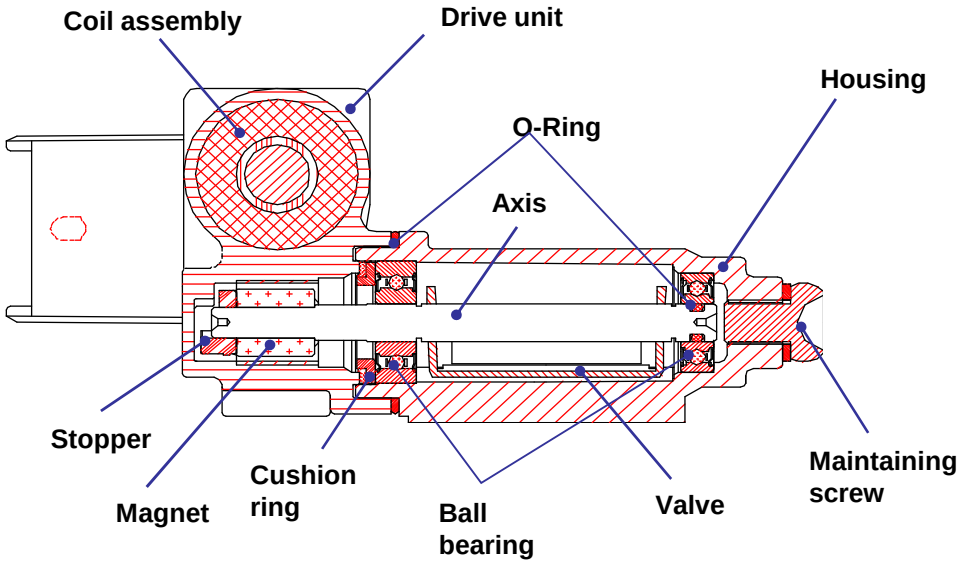

1. The ISA controls the proper intake air mass in every engine operating conditions.
2. The ECU controls the ISA (double coil of open/close) with frequency of 250Hz.
3. The ISA duty is determined by basic map and compensation of ATS, WTS, altitude and A/CON compressed load etc.

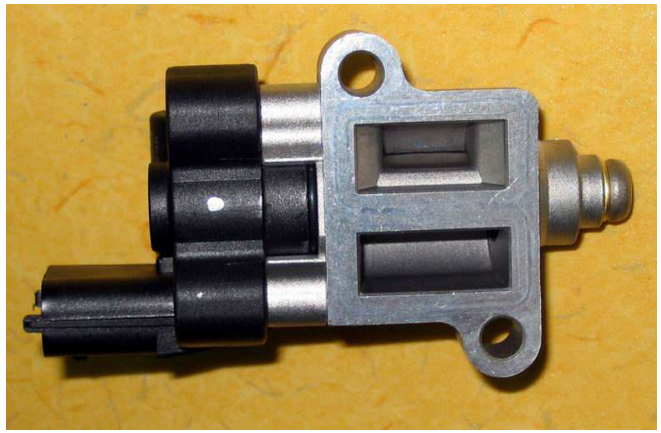

Simpo PDF Merge and Split Unregistered Version - http://www.simpopdf.com

PCSV

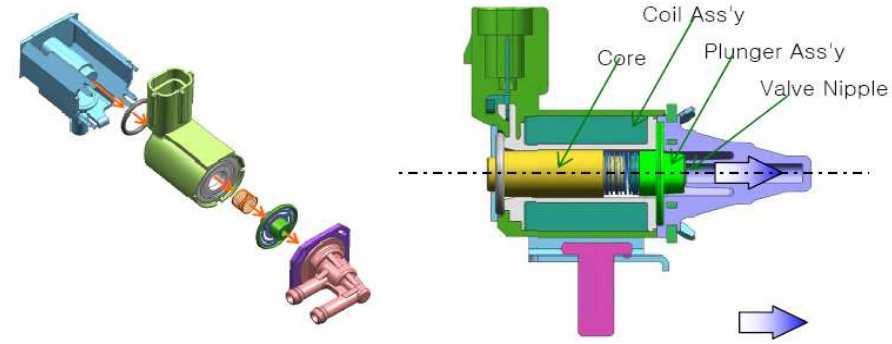

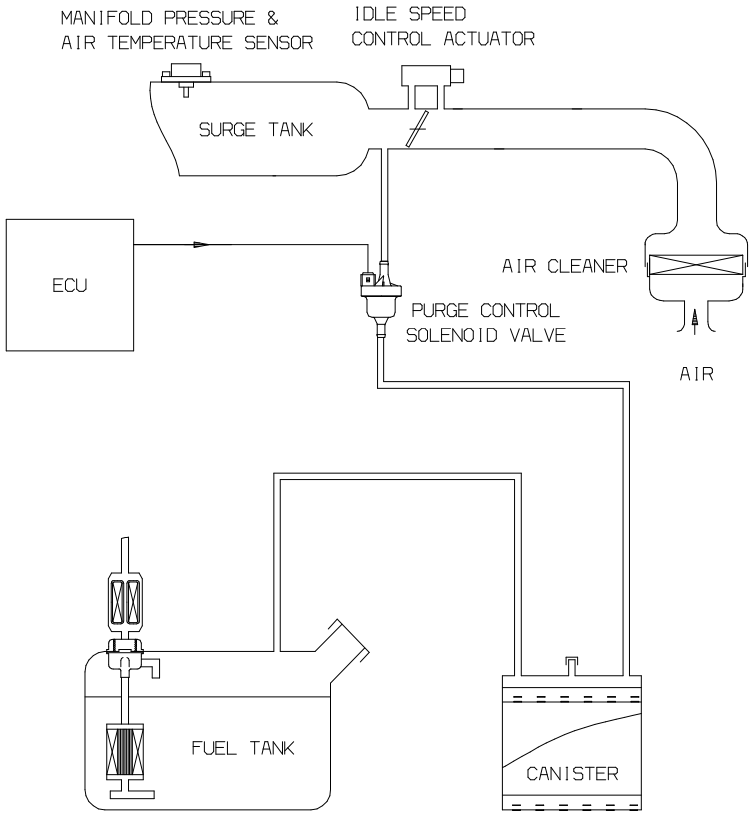

For Evaporative gas monitoring.

PCSV is installed between the canister and the intake manifold, it delivers or shuts the vapor gas to intake manifold, which is stored in the canister. The ECM controls the purge control solenoid valve.

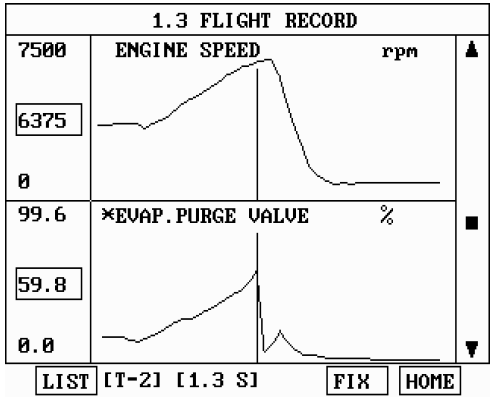

Simpo PDF Merge and Split Unregistered Version - http://www.simpopdf.com

Common Rail U-Engine

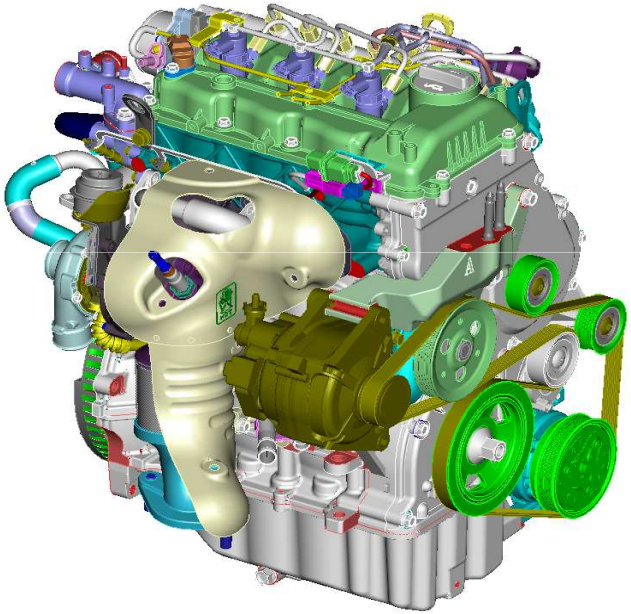

Copyright by Hyundai Motor Company. All rights reserved.

Simpo PDF Merge and Split Unregistered Version - http://www.simpopdf.com

PA - ENGINE

U engine

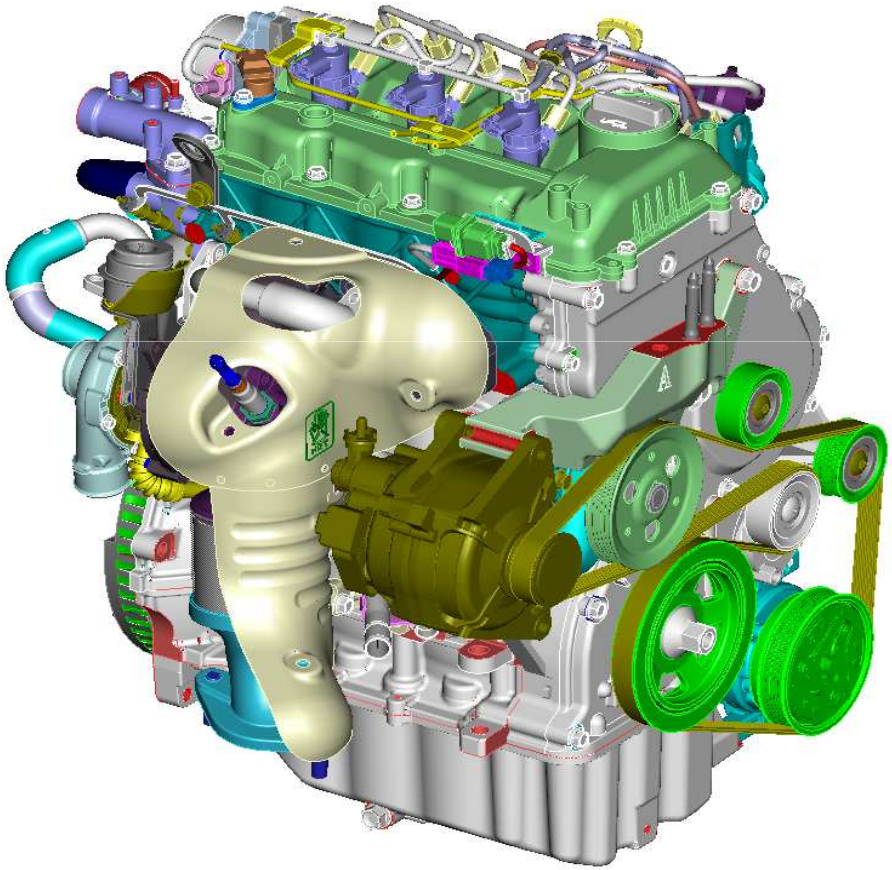

Engine	U - 1.1 VGT
Displacement (cc)	1120
Max. Power (PS / RPM)	75 / 4000
Max. Torque (kgf·m / RPM)	15.5 / 2000
Feature	• VGT Turbo Charger • Timing Chain • Electrical EGR & EGR cooler • Lambda Sensor • Throttle flap • Serpentine belt • Bed Plate • In-line 3 cylinders

Simpo PDF Merge and Split Unregistered Version - http://www.simpopdf.com

System Overview

E.G.R cooler

Electrical E.G.R

λ sensor

VGT

DOC (Diesel Oxidation Catalyst)

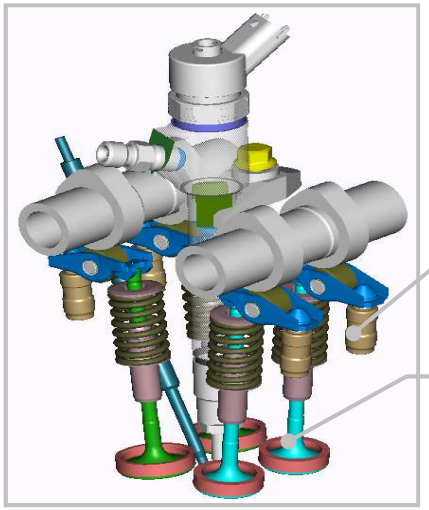

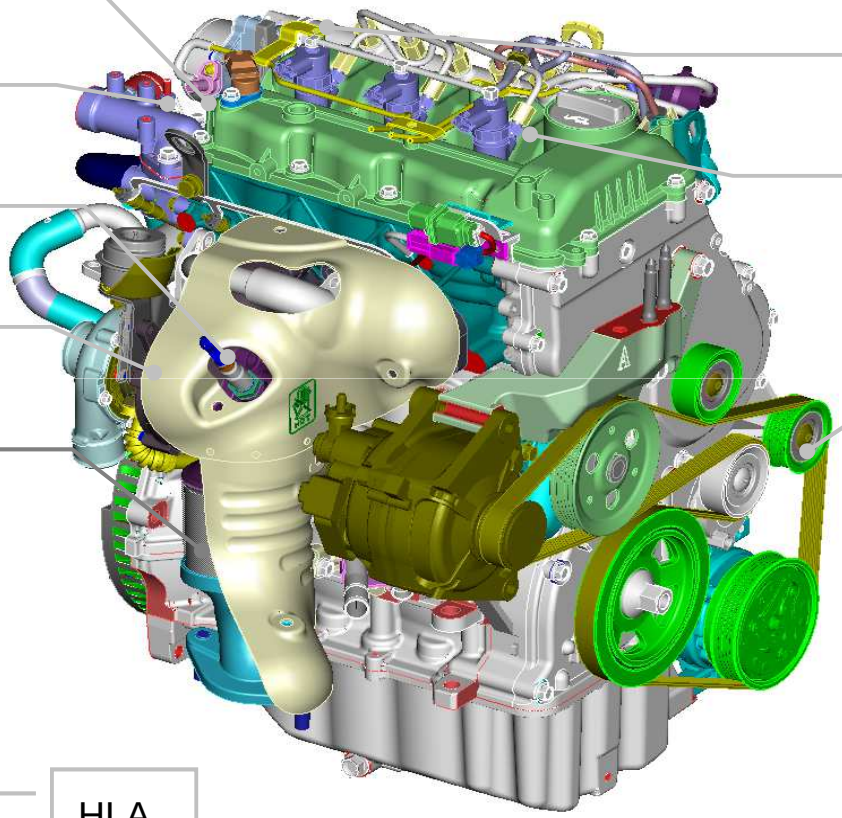

Throttle flap

CRDi system
✓EURO-4: 1600bar

Serpentine belt

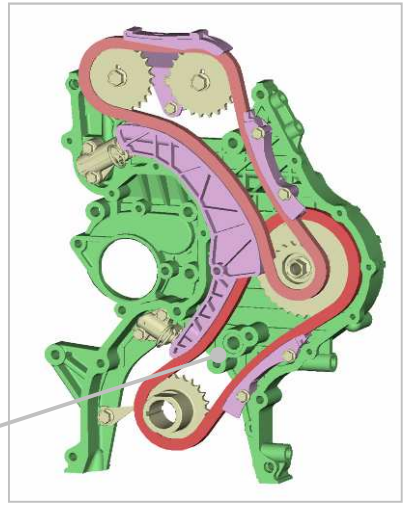

HLA

4 valve DOHC

Timing chain

Simpo PDF Merge and Split Unregistered Version - http://www.simpopdf.com

Timing System

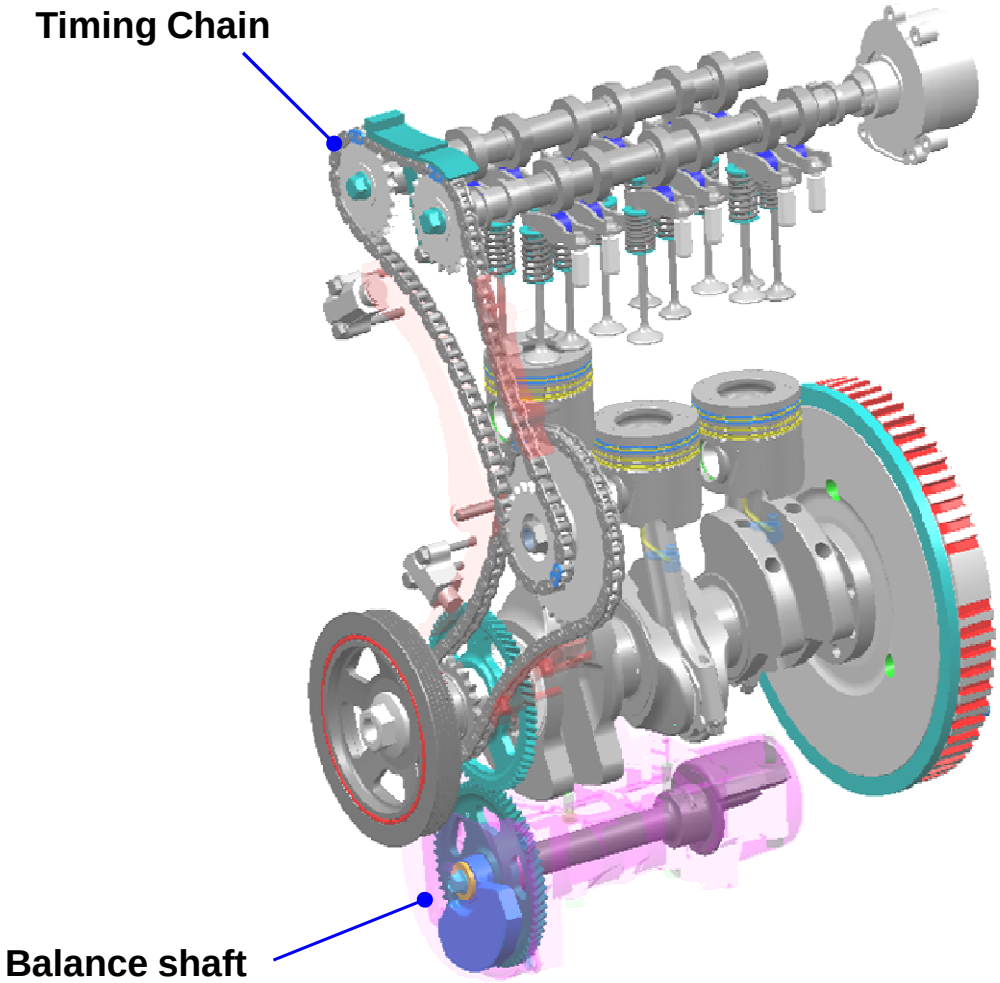

- **DOHC 4 Valve**
- **VALVE operating type**:
  - END PIVOT ROLLER SWING ARM

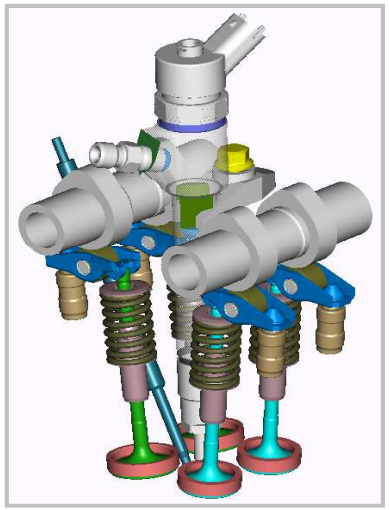

- **CAM operating type : 2 Chains**
- **Hollow camshaft**
- **Balance shaft is operated by gear**
  -> for reducing vibration

Simpo PDF Merge and Split Unregistered Version - http://www.simpopdf.com

Balance Shaft

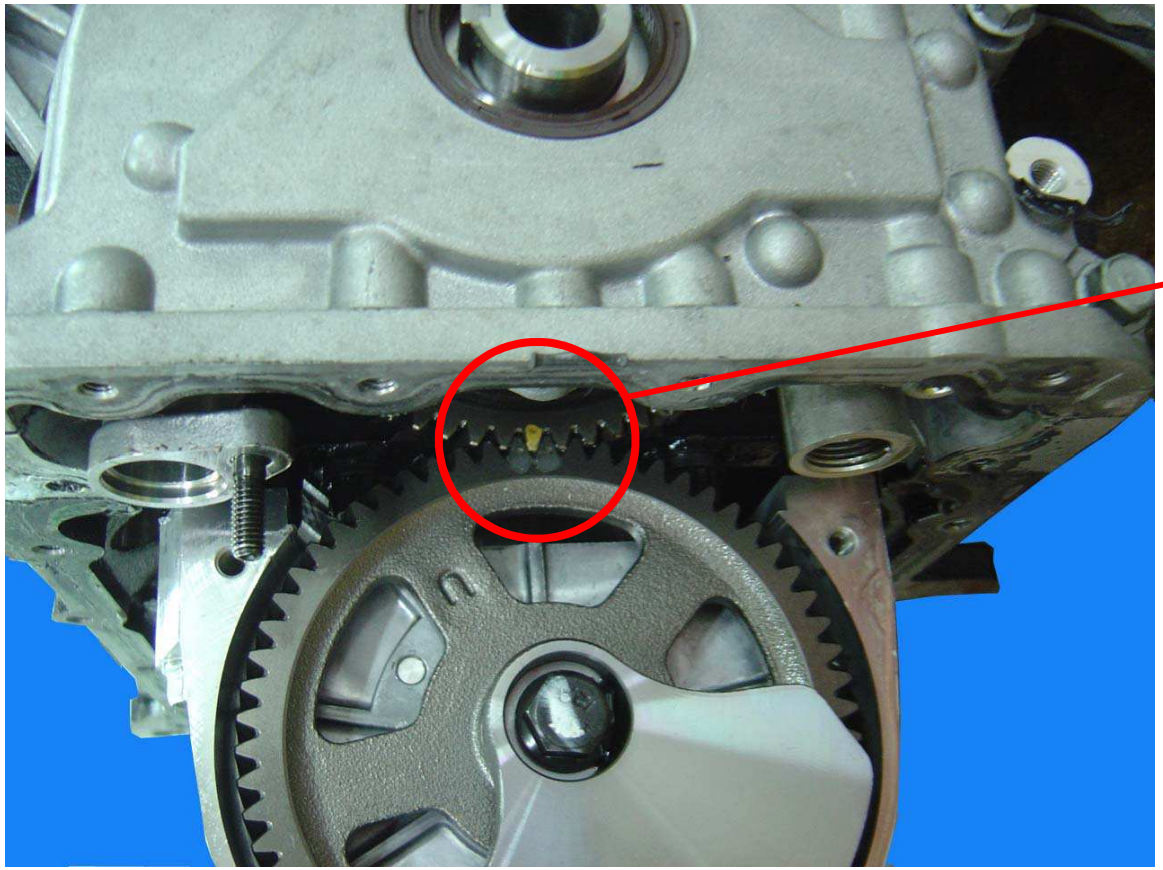

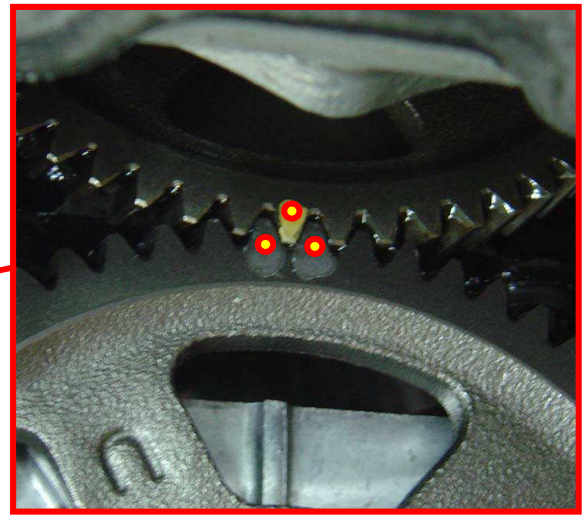

Timing Mark

Balance Shaft

Simpo PDF Merge and Split Unregistered Version - http://www.simpopdf.com

Intake / Exhaust manifold

◆ **VGT**

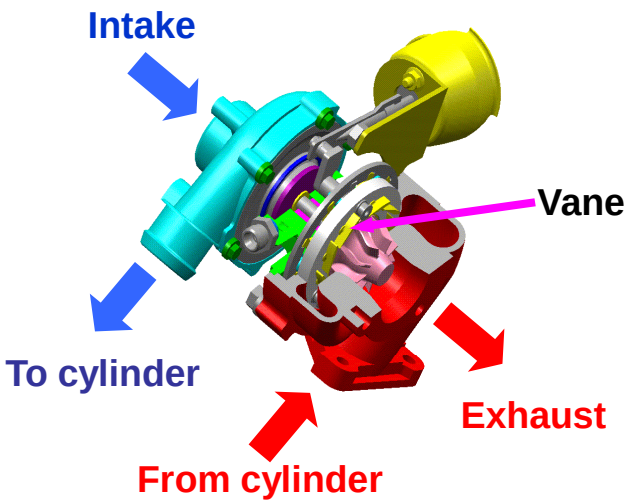

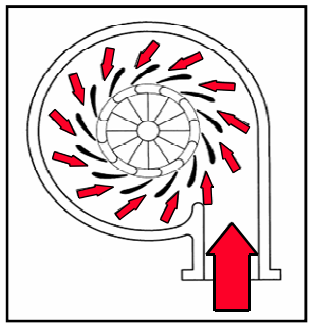

High Speed

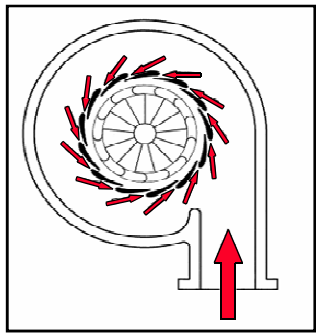

Low Speed

◆ **Electrical EGR Valve**

- Valve type : linear solenoid type
- Control voltage : 13.5V (Duty control)
- Coil resistance : 7.3 ~ 8.3 Ω (at 20℃)

◆ **EGR COOLER**

- Coolant cooling type
- Reduced intake air temperature and increased intake air
  → Reduced NOx and PM

◆ **WCC (Warm-up Catalytic Converter)**

◆ **Lambda sensor**

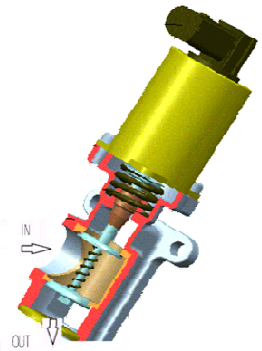

E / EGR Valve

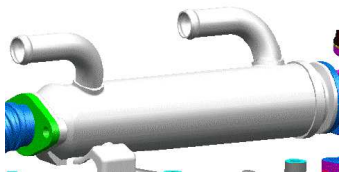

EGR cooler

Simpo PDF Merge and Split Unregistered Version - http://www.simpopdf.com

Fuel system – location / component

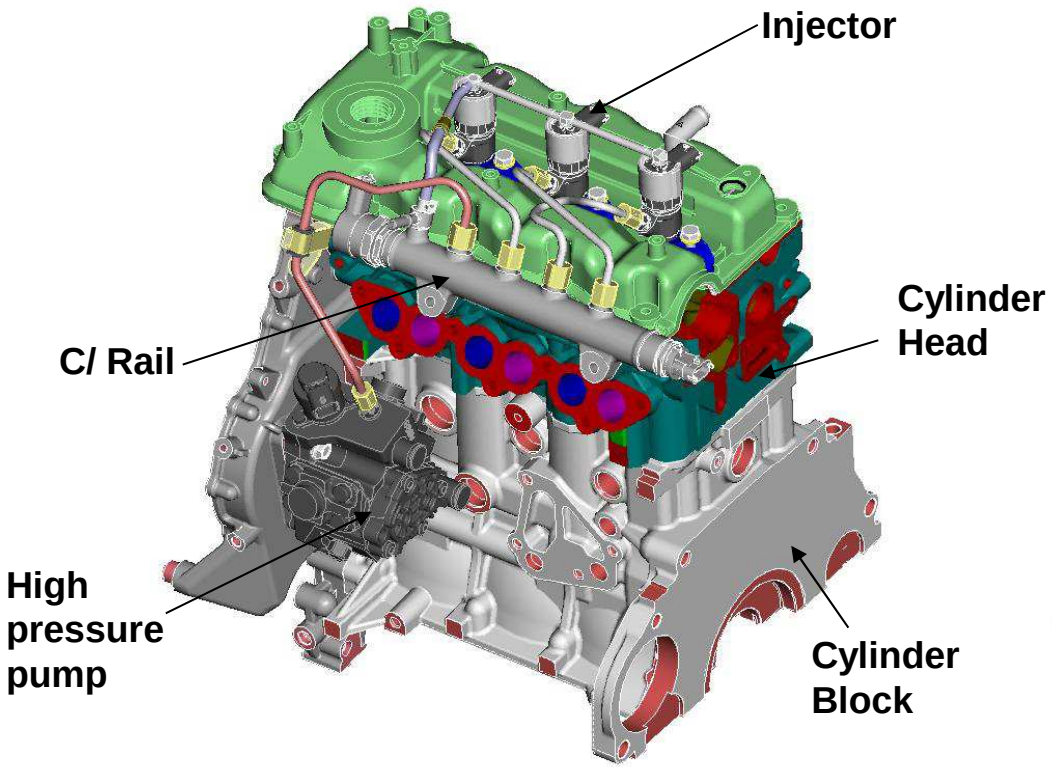

◆ **Component**

- High Pressure Pump
- Common Rail
- Injector

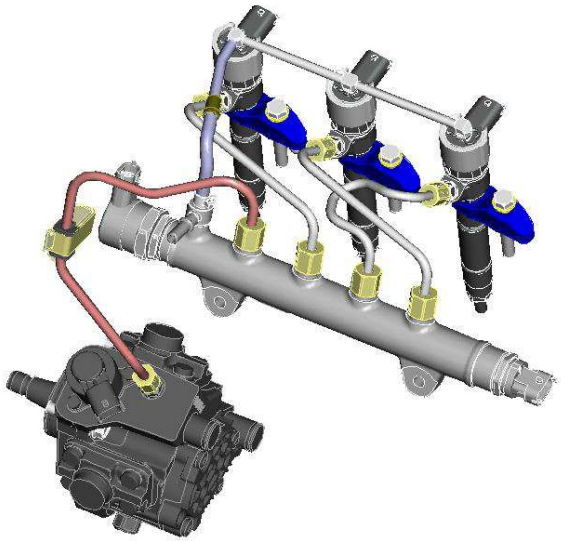

◆ **Max. Pressure : 1600 bar**

◆ **Duel pressure control (2 Governor control) : FPV + RPV**

※ FRV : Fuel Pressure regulator Valve , RPV : Rail Pressure regulator Valve

Simpo PDF Merge and Split Unregistered Version - http://www.simpopdf.com

Fuel system – High Pressure Pump / Common Rail

◆ **High Pressure Pump**

- Type : CP1H
- Max. Pressure : 1600 bar

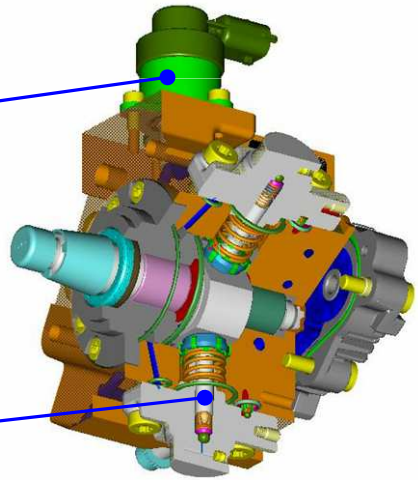

◆ **Common Rail**

- Allowed pressure : 1,600 bar
- Rail Pressure Sensor
  : Max. Measurement : 1,800 bar
- Applied RPV
- Throttle
  : Reduced fluctuation of fuel pressure to injector

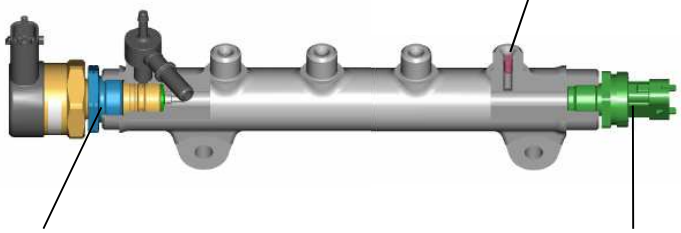

Simpo PDF Merge and Split Unregistered Version - http://www.simpopdf.com

Fuel system – Injector

- **Injector**
  - compensates fuel amount
    : Applied IQA (Injector Quantity Adjustment) code for compensating fuel amount of each injectors
  - Type : CRI2.2
  - Max. Pressure : 1600 bar

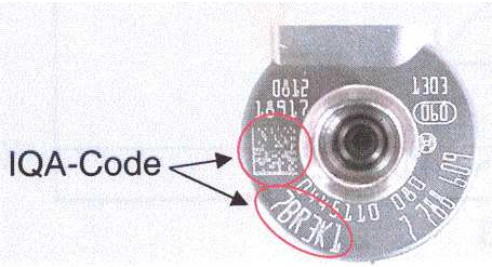

Ampere for solenoid control

Lift of armature

Fuel pressure of injector inside

Injection pattern

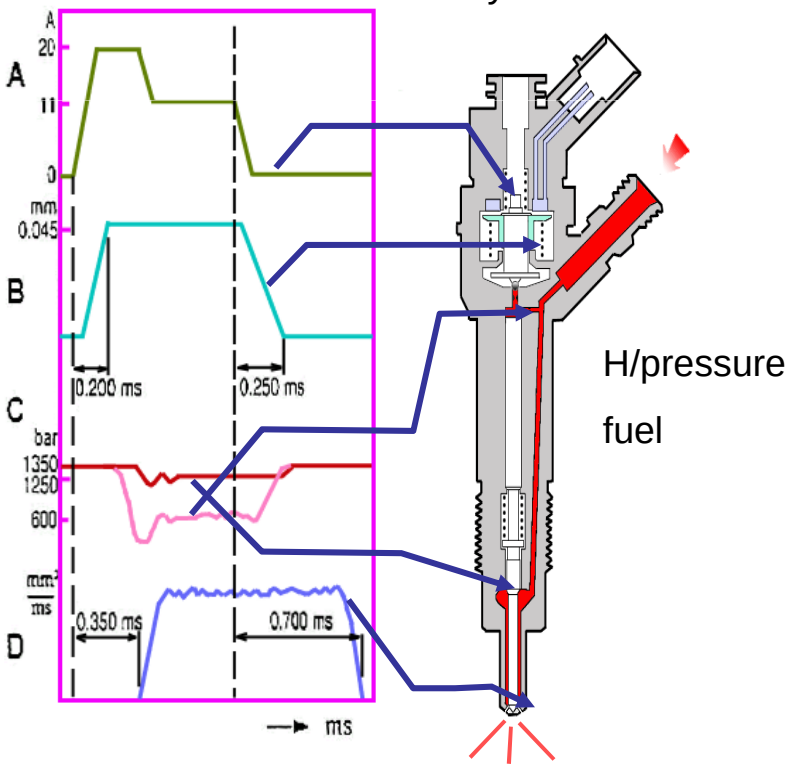

Simpo PDF Merge and Split Unregistered Version - http://www.simpopdf.com

Current Data

1.2 CURRENT DATA 01/54

IGNITION SW-IG 2	ON	
BATTERY VOLTAGE	14.1	V
FUEL QUANTITY	4.7	mm3
FUEL PRESSURE MEASURED	27	MPa
FUEL PRESSURE SETPOINT	27	MPa
RAIL PRESS.REGULATOR	23.5	%
INJ.PUMP REGULATOR	38.4	%
FUEL TEMPERATURE	43.14	°C

FIX SCRN FULL PART GRPH HELP

Idle condition

1.2 CURRENT DATA 01/54

IGNITION SW-IG 2	ON	
BATTERY VOLTAGE	14.1	V
FUEL QUANTITY	5.5	mm3
FUEL PRESSURE MEASURED	45	MPa
FUEL PRESSURE SETPOINT	45	MPa
RAIL PRESS.REGULATOR	29.5	%
INJ.PUMP REGULATOR	38.8	%
FUEL TEMPERATURE	43.53	°C

FIX SCRN FULL PART GRPH HELP

1500 rpm

1.2 CURRENT DATA 01/54

IGNITION SW-IG 2	ON	
BATTERY VOLTAGE	14.2	V
FUEL QUANTITY	6.7	mm3
FUEL PRESSURE MEASURED	68	MPa
FUEL PRESSURE SETPOINT	68	MPa
RAIL PRESS.REGULATOR	35.1	%
INJ.PUMP REGULATOR	37.3	%
FUEL TEMPERATURE	43.92	°C

FIX SCRN FULL PART GRPH HELP

3000 rpm

Conditions

-No Electrical Load

-Neutral (Manual Transaxle)

-No DTC

Simpo PDF Merge and Split Unregistered Version - http://www.simpopdf.com

Current Data

1.2 CURRENT DATA 09/54

FUEL TEMP.SENSOR(V)	2647 mV
AIR MASS FLOW	23.5 Kg/h
AIR MASS PER CYLINDER	346.9mg/st
AIR TEMPERRATURE SNSR	43.3 °C
AIR TEMPE.VOLTAGE	2254 mV
EGR ACTUATOR	4.8 %
ATMOSPHERIC PRESS.SNSR	1001 hPa
WATER TEMP. SENSOR	67.6 °C

FIX SCRN FULL PART GRPH HELP

Idle condition

1.2 CURRENT DATA 09/54

FUEL TEMP.SENSOR(V)	2568 mV
AIR MASS FLOW	31.4 Kg/h
AIR MASS PER CYLINDER	218.4mg/st
AIR TEMPERRATURE SNSR	47.3 °C
AIR TEMPE.VOLTAGE	2117 mV
EGR ACTUATOR	43.4 %
ATMOSPHERIC PRESS.SNSR	1001 hPa
WATER TEMP. SENSOR	73.9 °C

FIX SCRN FULL PART GRPH HELP

1500 rpm

1.2 CURRENT DATA 09/54

FUEL TEMP.SENSOR(V)	2509 mV
AIR MASS FLOW	133.3Kg/h
AIR MASS PER CYLINDER	488.2mg/st
AIR TEMPERRATURE SNSR	52.0 °C
AIR TEMPE.VOLTAGE	1921 mV
EGR ACTUATOR	34.7 %
ATMOSPHERIC PRESS.SNSR	1001 hPa
WATER TEMP. SENSOR	82.5 °C

FIX SCRN FULL PART GRPH HELP

3000 rpm

Conditions

-No Electrical Load

-Neutral (Manual Transaxle)

-No DTC

Simpo PDF Merge and Split Unregistered Version - http://www.simpopdf.com

Current Data

1.2 CURRENT DATA 17/54

CLUTCH SWITCH	ON	
NEUTRAL OR 1ST GEAR	ON	
REDUNDANT BRAKE SWITCH	OFF	
BRAKE SWITCH	OFF	
ACCEL PEDAL POS. SNSR	0.0	%
ACCEL PEDAL VOLT-1	764	mV
ACCEL PEDAL VOLT-2	352	mV
STATUS OF SIG APP/BRK	GOOD	

FIX SCRN FULL PART GRPH HELP

Idle condition

1.2 CURRENT DATA 17/54

CLUTCH SWITCH	ON	
NEUTRAL OR 1ST GEAR	ON	
REDUNDANT BRAKE SWITCH	OFF	
BRAKE SWITCH	OFF	
ACCEL PEDAL POS. SNSR	12.8	%
ACCEL PEDAL VOLT-1	1215	mV
ACCEL PEDAL VOLT-2	588	mV
STATUS OF SIG APP/BRK	GOOD	

FIX SCRN FULL PART GRPH HELP

1500 rpm

1.2 CURRENT DATA 17/54

CLUTCH SWITCH	ON	
NEUTRAL OR 1ST GEAR	ON	
REDUNDANT BRAKE SWITCH	OFF	
BRAKE SWITCH	OFF	
ACCEL PEDAL POS. SNSR	13.5	%
ACCEL PEDAL VOLT-1	1235	mV
ACCEL PEDAL VOLT-2	607	mV
STATUS OF SIG APP/BRK	GOOD	

FIX SCRN FULL PART GRPH HELP

3000 rpm

Conditions

-No Electrical Load

-Neutral (Manual Transaxle)

-No DTC

Simpo PDF Merge and Split Unregistered Version - http://www.simpopdf.com

Current Data

1.2 CURRENT DATA 25/54

A/C ON SIGNAL SWITCH	OFF
A/C COMPRESSOR RELAY	OFF
A/C PRESSURE SENSOR	1372 mV
BLOWER SWITCH	OFF
FAN-LOW SPEED	OFF
FAN-HIGH SPEED	OFF
GLOW RELAY	OFF
GLOW CONTROL LAMP	OFF

FIX SCRN FULL PART GRPH HELP

Idle condition

1.2 CURRENT DATA 25/54

A/C ON SIGNAL SWITCH	OFF
A/C COMPRESSOR RELAY	OFF
A/C PRESSURE SENSOR	1392 mV
BLOWER SWITCH	OFF
FAN-LOW SPEED	OFF
FAN-HIGH SPEED	OFF
GLOW RELAY	OFF
GLOW CONTROL LAMP	OFF

FIX SCRN FULL PART GRPH HELP

1500 rpm

1.2 CURRENT DATA 25/54

A/C ON SIGNAL SWITCH	OFF
A/C COMPRESSOR RELAY	OFF
A/C PRESSURE SENSOR	1411 mV
BLOWER SWITCH	OFF
FAN-LOW SPEED	OFF
FAN-HIGH SPEED	OFF
GLOW RELAY	OFF
GLOW CONTROL LAMP	OFF

FIX SCRN FULL PART GRPH HELP

3000 rpm

Conditions

-No Electrical Load

-Neutral (Manual Transaxle)

-No DTC

Simpo PDF Merge and Split Unregistered Version - http://www.simpopdf.com

Current Data

1.2 CURRENT DATA 33/54

AUXILIARY HEATER	OFF	
BOOST PRESSURE SENSOR	974	hPa
BOOST PRESS.VOLTAGE	1549	mV
VGT ACTUATOR	71.8	%
V/SWIRL ACTU.(U/D/S)	0	%
INLET THROTTLE ACTU.	94.5	%
CHECK ENGINE LAMP	OFF	
O2S SUBTRAC.VOLTAGE	0	mV

FIX SCRN FULL PART GRPH HELP

Idle condition

1.2 CURRENT DATA 33/54

AUXILIARY HEATER	OFF	
BOOST PRESSURE SENSOR	988	hPa
BOOST PRESS.VOLTAGE	1549	mV
VGT ACTUATOR	58.8	%
V/SWIRL ACTU.(U/D/S)	0	%
INLET THROTTLE ACTU.	94.9	%
CHECK ENGINE LAMP	OFF	
O2S SUBTRAC.VOLTAGE	800	mV

FIX SCRN FULL PART GRPH HELP

1500 rpm

1.2 CURRENT DATA 33/54

AUXILIARY HEATER	OFF	
BOOST PRESSURE SENSOR	1043	hPa
BOOST PRESS.VOLTAGE	1647	mV
VGT ACTUATOR	54.1	%
V/SWIRL ACTU.(U/D/S)	0	%
INLET THROTTLE ACTU.	94.9	%
CHECK ENGINE LAMP	OFF	
O2S SUBTRAC.VOLTAGE	858	mV

FIX SCRN FULL PART GRPH HELP

3000 rpm

Conditions

-No Electrical Load

-Neutral (Manual Transaxle)

-No DTC

Simpo PDF Merge and Split Unregistered Version - http://www.simpopdf.com

Current Data

1.2 CURRENT DATA 41/54

LAMDA(O2S)	4	
O2S TEMPERATURE	574.7°C	
O2S HEATER DUTY	1.6	%
O2S STATE OF ADAPTION	ON	
VEHICLE SPEED SENSOR	0	Km/h
ACTUAL VEHICLE ACCELE.	0.1	m/s2
GEAR POSITION	0	
ENGINE SPEED	880	rpm

FIX SCRN FULL PART GRPH HELP

Idle condition

1.2 CURRENT DATA 41/54

LAMDA(O2S)	2	
O2S TEMPERATURE	777.2°C	
O2S HEATER DUTY	38.4	%
O2S STATE OF ADAPTION	ON	
VEHICLE SPEED SENSOR	0	Km/h
ACTUAL VEHICLE ACCELE.	0.1	m/s2
GEAR POSITION	0	
ENGINE SPEED	1468	rpm

FIX SCRN FULL PART GRPH HELP

1500 rpm

1.2 CURRENT DATA 41/54

LAMDA(O2S)	3	
O2S TEMPERATURE	777.2°C	
O2S HEATER DUTY	47.1	%
O2S STATE OF ADAPTION	ON	
VEHICLE SPEED SENSOR	0	Km/h
ACTUAL VEHICLE ACCELE.	0.1	m/s2
GEAR POSITION	0	
ENGINE SPEED	3057	rpm

FIX SCRN FULL PART GRPH HELP

3000 rpm

Conditions

-No Electrical Load

-Neutral (Manual Transaxle)

-No DTC

Simpo PDF Merge and Split Unregistered Version - http://www.simpopdf.com

Current Data

1.2 CURRENT DATA 47/54

GEAR POSITION	0
ENGINE SPEED	881 rpm
CALCULATED LOAD VALUE	18.0 %
CURRENT INNER TORQUE	10.6 %
DESIRED INNER TORQUE	10.6 %
STATE OF IMMO PRESENCE	ON
IMMOBILIZER LAMP	OFF
AT/MT INFORMATION	MT

FIX SCRN FULL PART GRPH HELP

Idle condition

1.2 CURRENT DATA 47/54

GEAR POSITION	0
ENGINE SPEED	1505 rpm
CALCULATED LOAD VALUE	39.2 %
CURRENT INNER TORQUE	12.9 %
DESIRED INNER TORQUE	12.9 %
STATE OF IMMO PRESENCE	ON
IMMOBILIZER LAMP	OFF
AT/MT INFORMATION	MT

FIX SCRN FULL PART GRPH HELP

1500 rpm

1.2 CURRENT DATA 47/54

GEAR POSITION	0
ENGINE SPEED	3050 rpm
CALCULATED LOAD VALUE	27.5 %
CURRENT INNER TORQUE	14.5 %
DESIRED INNER TORQUE	14.5 %
STATE OF IMMO PRESENCE	ON
IMMOBILIZER LAMP	OFF
AT/MT INFORMATION	MT

FIX SCRN FULL PART GRPH HELP

3000 rpm

Conditions

-No Electrical Load

-Neutral (Manual Transaxle)

-No DTC

Simpo PDF Merge and Split Unregistered Version - http://www.simpopdf.com

Injector specific data (IQA)

```
1. HYUNDAI VEHICLE DIAGNOSIS ▼
MODEL  : PA
SYSTEM : ENGINE(DIESEL)

01. DIAGNOSTIC TROUBLE CODES
02. CURRENT DATA
03. FLIGHT RECORD
04. ACTUATION TEST
05. SIMU-SCAN
06. IDENTIFICATION CHECK
07. ENGINE TEST FUNCTION
08. INJECTOR SPECIFIC DATA
```

```
1.8. INJECTOR SPECIFIC DATA

INJECTOR 1
INJECTOR 2
INJECTOR 3
INJECTOR 4

- SELECT THE CYLINDER BY SHIFT+ARROW
  KEY AND INPUT THE DATA BY F1~F6
  KEY AND PRESS [ENTER] KEY.

ABCD EFGH IJKL MNOP QR-U VW-Z
```

```
1. HYUNDAI VEHICLE DIAGNOSIS ▼
MODEL  : PA
SYSTEM : ENGINE(DIESEL)

01. DIAGNOSTIC TROUBLE CODES
02. CURRENT DATA
03. FLIGHT RECORD
04. ACTUATION TEST
05. SIMU-SCAN
06. IDENTIFICATION CHECK
07. ENGINE TEST FUNCTION
08. INJECTOR SPECIFIC DATA
```

```
1.8. INJECTOR SPECIFIC DATA

INJECTOR 1   7YH1CID
INJECTOR 2   8PANCIF
INJECTOR 3   7YAT4NE
INJECTOR 4   AAAAAAA

- READ IQA CODE OR INPUT THE DATA BY
  F1~F6  KEY AND PRESS [ENTER] KEY.

ABCD EFGH IJKL MNOP QR-U VW-Z
```

Simpo PDF Merge and Split Unregistered Version - http://www.simpopdf.com

Engine Test Function

```
1. HYUNDAI VEHICLE DIAGNOSIS
MODEL  : PA
SYSTEM : ENGINE(DIESEL)

  01. DIAGNOSTIC TROUBLE CODES
  02. CURRENT DATA
  03. FLIGHT RECORD
  04. ACTUATION TEST
  05. SIMU-SCAN
  06. IDENTIFICATION CHECK
  07. ENGINE TEST FUNCTION
  08. INJECTOR SPECIFIC DATA
```

```
1.7. COMPRESSION TEST

System Information

ECU H/W:39101-2A810
ROM ID :B0PA4M2EIP1S

THIS FUNCTION IS AVAILABE.

If you ready, Press[ENTER].
```

Engine Test Function is consist of 3 tests, which are tested by Hi-scan.

Those are test for mechanical condition of engine, mechanical condition of injectors and electrical compensated by ECM

- Compression test
- Idle speed comparison
- Injection quantity comparison

Simpo PDF Merge and Split Unregistered Version - http://www.simpopdf.com

Engine Test Function – compression test

```
1.7. COMPRESSION TEST

01. COMPRESSION TEST
02. IDLE SPEED COMPARISON
03. INJECT. QUANTITY COMPARISON
```

```
7.1 COMPRESSION TEST
This test is used for detecting
cylinder specific engine speed
without injection.
*Test condition
  -Shift level      : P or N
  -Engine           : Stop(IGN. ON)
  -Electrical Load  : OFF

If you ready, now cranking, and stop
cranking when stop message appear on
the screen. Press[ENTER].
```

7.1 COMPRESSION TEST

CYLINDER ENGINE SPEED(RPM)

#1	#2	#3	#4
241	245	243	0
240	245	243	0
240	243	243	0
240	243	242	0
238	243	242	0
238	243	242	0
238	243	243	0

ANALYZE THE TEST RESULT.

ANAL

7.1 COMPRESSION TEST

CYLINDER ENGINE SPEED(RPM)

#1	#2	#3	#4
241	245	243	0
240	245	243	0
240	243	243	0
240	243	242	0
238	243	242	0
238	243	242	0
238	243	243	0

ANALYZE THE TEST RESULT.

<< >> AVG HELP

CYLINDER ENGINE SPEED(RPM)

SPEED(RPM)	200	250	300	350	AVG.
#1 CYL.					240
#2 CYL.					244
#3 CYL.					243
#4 CYL.					0

PREV HELP

```
7.1 COMPRESSION TEST
*The higher cylinder engine speed:
 ->The low compression pressure.
*It can help to identify the
 mechanical defects.
```

PREV

Simpo PDF Merge and Split Unregistered Version - http://www.simpopdf.com

Engine Test Function – Idle speed comparison

```
1.7. COMPRESSION TEST

01. COMPRESSION TEST
02. IDLE SPEED COMPARISON
03. INJECT. QUANTITY COMPARISON
```

```
7.2 IDLE SPEED COMPARISON
This test is used for detecting
cylinder specific engine speed with
injector energizing.
(Cylinder balancing function is
deactivated.)
*Test condition
  -Compression test : Normal
  -Shift level      : P or N
  -Engine           : Idle
  -Electrical Load  : OFF
IF you ready, Press[ENTER].
```

7.2 IDLE SPEED COMPARISON

CYLINDER ENGINE SPEED(RPM)

#1	#2	#3	#4
888	891	890	0
884	889	888	0
886	888	890	0
888	889	890	0
889	888	888	0
888	888	888	0
887	888	887	0

ANALYZE THE TEST RESULT.

ANAL

7.2 IDLE SPEED COMPARISON

CYLINDER ENGINE SPEED(RPM)

#1	#2	#3	#4
888	891	890	0
884	889	888	0
886	888	890	0
888	889	890	0
889	888	888	0
888	888	888	0
887	888	887	0

ANALYZE THE TEST RESULT.

<< >> AVG HELP

CYLINDER ENGINE SPEED(RPM)

SPEED(RPM)	650	750	850	950	AVG.
#1 CYL.	■	■	■	■	888
#2 CYL.	■	■	■	■	890
#3 CYL.	■	■	■	■	889
#4 CYL.					0

PREV HELP

```
7.2 IDLE SPEED COMPARISON
*The lower engine speed:
 ->The injector injects less quantity
   than other injectors.
*The higher engine speed:
 ->The injector injects more quantity
   than other injectors.
```

PREV

Simpo PDF Merge and Split Unregistered Version - http://www.simpopdf.com

Engine Test Function – Injection quantity comparison

```
1.7. COMPRESSION TEST

01. COMPRESSION TEST
02. IDLE SPEED COMPARISON
03. INJECT. QUANTITY COMPARISON
```

```
7.3 INJECT. QUANTITY COMPARISON
This test is used for detecting
cylinder specific quantity with
individual energizing of injector.
(Cylinder balancing function is
activated.)
*Test condition
  -Compression test : Normal
  -Shift level      : P or N
  -Engine           : Idle
  -Electrical Load  : OFF
 IF you ready, Press[ENTER].
```

7.3 INJECT. QUANTITY COMPARISON

ENG. SPEED(RPM)				INJECTION QUANITY(MM3)			
#1	#2	#3	#4	#1	#2	#3	#4
879	880	880	0	0.1	-0.1	-0.0	-0.0
880	880	881	0	0.1	-0.1	-0.0	-0.0
880	879	881	0	0.1	-0.1	-0.0	-0.0
879	880	880	0	0.1	-0.1	-0.0	-0.0
879	880	879	0	0.1	-0.1	-0.0	-0.0
879	879	880	0	0.1	-0.1	-0.0	-0.0
880	880	881	0	0.1	-0.1	-0.0	-0.0

ANALYZE THE TEST RESULT.

[ANAL]

7.3 INJECT. QUANTITY COMPARISON

ENG. SPEED(RPM)				INJECTION QUANITY(MM3)			
#1	#2	#3	#4	#1	#2	#3	#4
879	880	880	0	0.1	-0.1	-0.0	-0.0
880	880	881	0	0.1	-0.1	-0.0	-0.0
880	879	881	0	0.1	-0.1	-0.0	-0.0
879	880	880	0	0.1	-0.1	-0.0	-0.0
879	880	879	0	0.1	-0.1	-0.0	-0.0
879	879	880	0	0.1	-0.1	-0.0	-0.0
880	880	881	0	0.1	-0.1	-0.0	-0.0

ANALYZE THE TEST RESULT.

[<<] [>>] [AVG] [HELP]

CYLINDER ENGINE SPEED(RPM)

SPEED(RPM)	650	750	850	950	AVG.
#1 CYL.					878
#2 CYL.					878
#3 CYL.					879
#4 CYL.					0

QUANT.(MM3)	-4	-2	0	2	AVG.
#1 CYL.					0.08
#2 CYL.					-0.05
#3 CYL.					-0.03
#4 CYL.					-0.00

[PREV] [HELP]

```
7.3 INJECT. QUANTITY COMPARISON
*The positive correction value:
 ->The fuel injection of the cylinder
   is less than that of other cylinder.
*The negative correction value:
 ->The fuel injection of the cylinder
   is more than that of other cylinder.
*Extreme correction value identifies a
 problematic injector.
After replacing a injector with newone
,retest & confirm the engine condition
```

[PREV]

Simpo PDF Merge and Split Unregistered Version - http://www.simpopdf.com

M5EF2, A4CF0

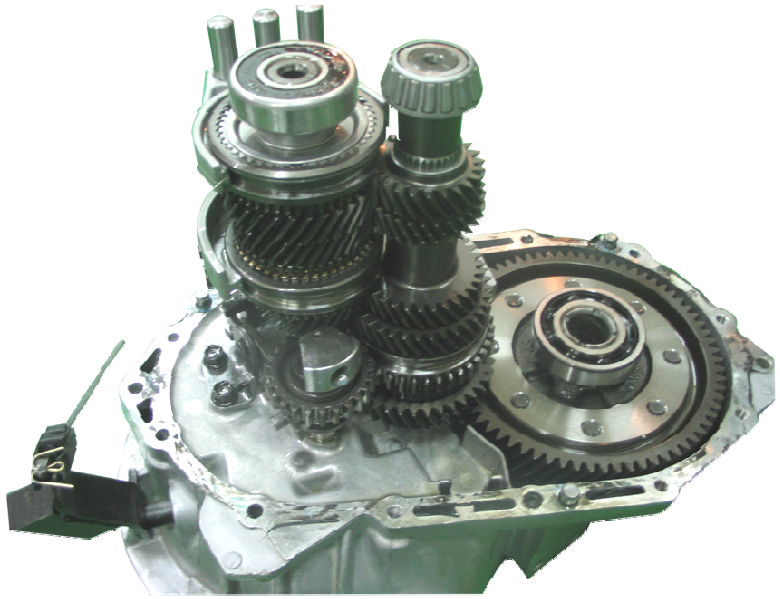

Copyright by Hyundai Motor Company. All rights reserved.

Simpo PDF Merge and Split Unregistered Version - http://www.simpopdf.com

TM Variation

Engine			T/M		Area		
Model	**Volume** [cc]	[PS/kg.m]	**M/T**	**A/T**	**India**	**Europe**	**General**
ε-1.1 (G4HG)	**1,086**	**64/9.9**	**M5EF2**	**A4CF0**	● ('07.10)	● ('07.12)	● ('07.12)
κ**-1.2** (G4LA)	***1,248**	**77/11.8**			**-**	● ('08.9)	● ('08.10)
	1,197	**77/11.2**			● ('08.9)	-	-
U-1.1 (U3FA)	**1,120**	**75/15.5**	**M5CF1**	**-**	**-**	● ('07.12)	**-**

*** It is also called referred to as 'κ-1.25' to identify with 1,197cc.**

Simpo PDF Merge and Split Unregistered Version - http://www.simpopdf.com

M/T Main Features

Items	PA	MXI	PA
Model	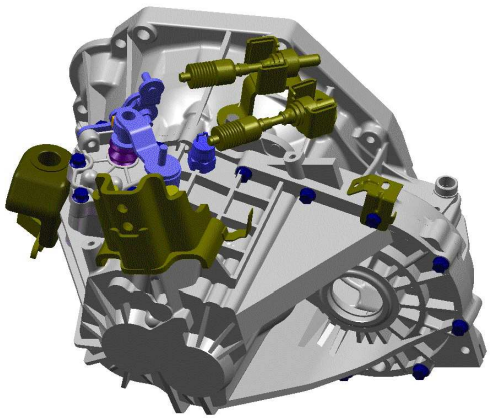	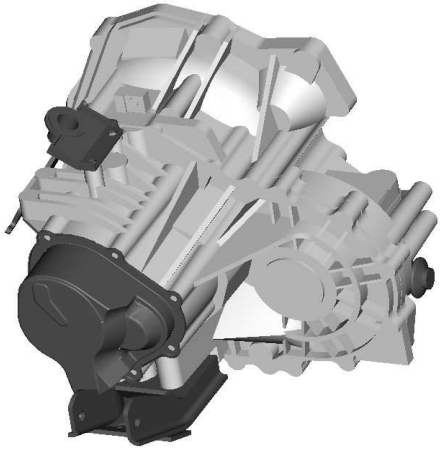	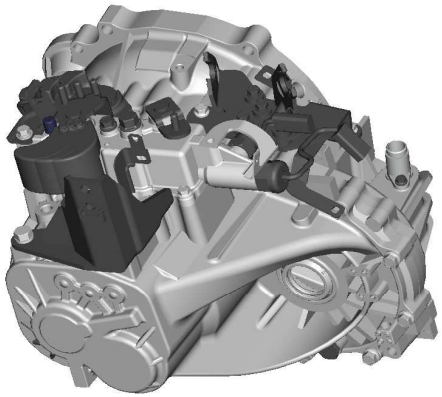
Engine	ε- 1.1 /κ-1.2	ε- 1.0 / 1.1	U - 1.1
M/T code	M5EF2	M5EF1	M5CF1
Torque (kgf-m)	12.5	10.0	15.5
Shaft distance (mm)	172	165	189
Length (mm)	347	352.2	378
Weight (kg, dry)	30	24.3	41.6

Simpo PDF Merge and Split Unregistered Version - http://www.simpopdf.com

M/T Comparison

Items	PA	MXI	PA
Structure	M5EF2 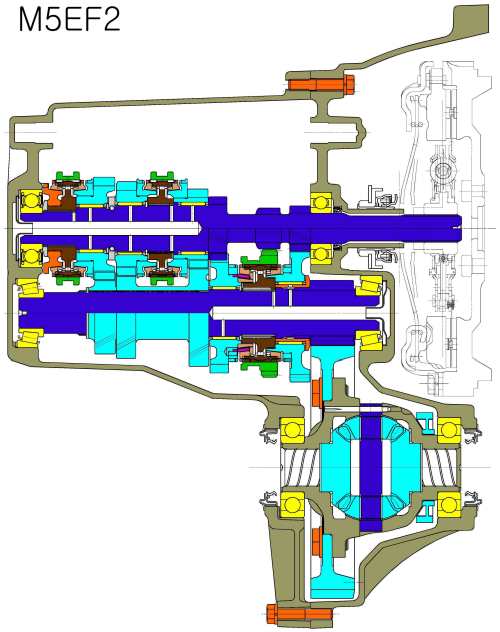	M5EF1 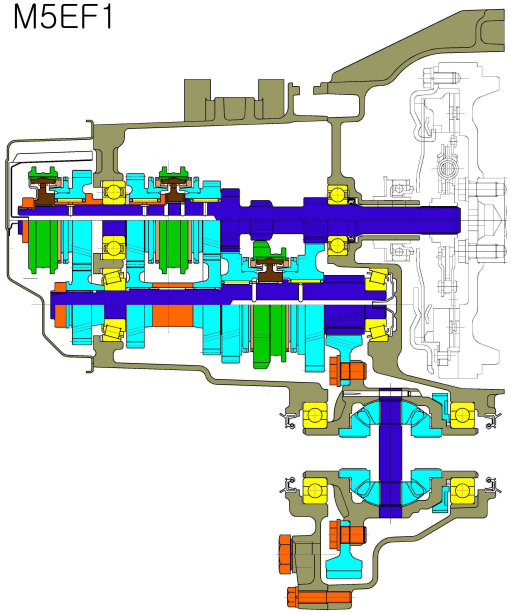	M5CF1 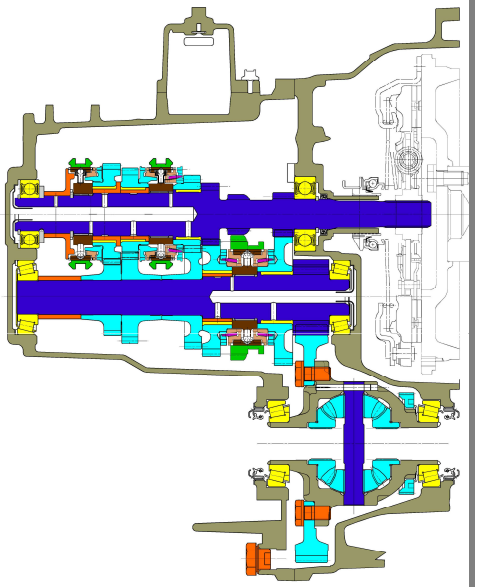
Case	2 pcs. (C/HSG+T/CASE)	3 pcs. (C/HSG+T/CASE+R/COVER)	2 pcs. (C/HSG+T/CASE)
Shift control	CABLE type	ROD type	CABLE type
Synchro.	1st : Single cone carbon ring, 2nd : Double cone, 3rd ~ 5th : Single cone	All : Single cone	1st ~ 3rd : Double cone, 4th ~ 5th : Single cone, R : Anti-Vibration mech.
Clutch	Manual	Manual	Hydraulic
Oil	Low viscosity & permanent	Permanent	Low viscosity & permanent

Simpo PDF Merge and Split Unregistered Version - http://www.simpopdf.com

M5EF2 Main Features

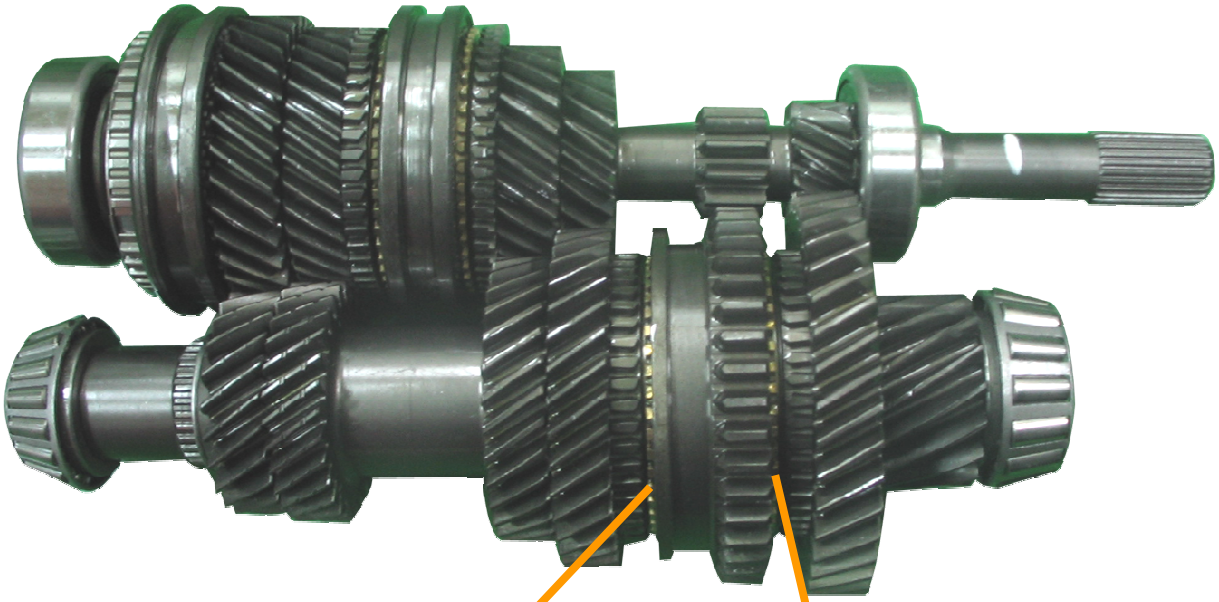

Double cone synchronizer

Single carbon ring

Manual cable type clutch (push type)

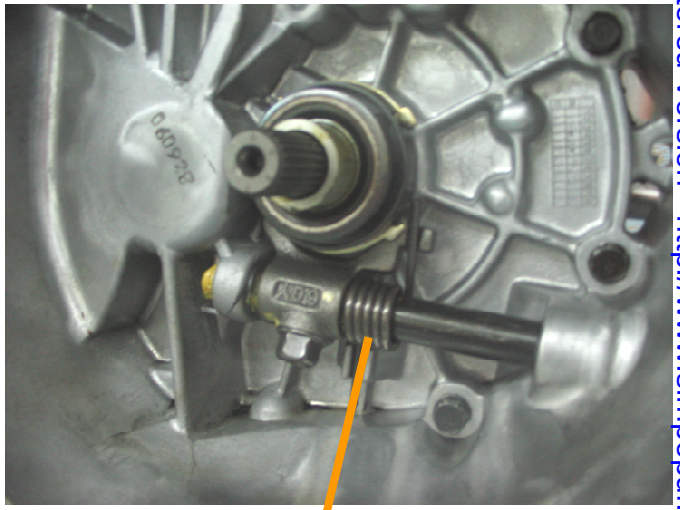

Return spring

Simpo PDF Merge and Split Unregistered Version - http://www.simpopdf.com

A4CF0 Internal Structure

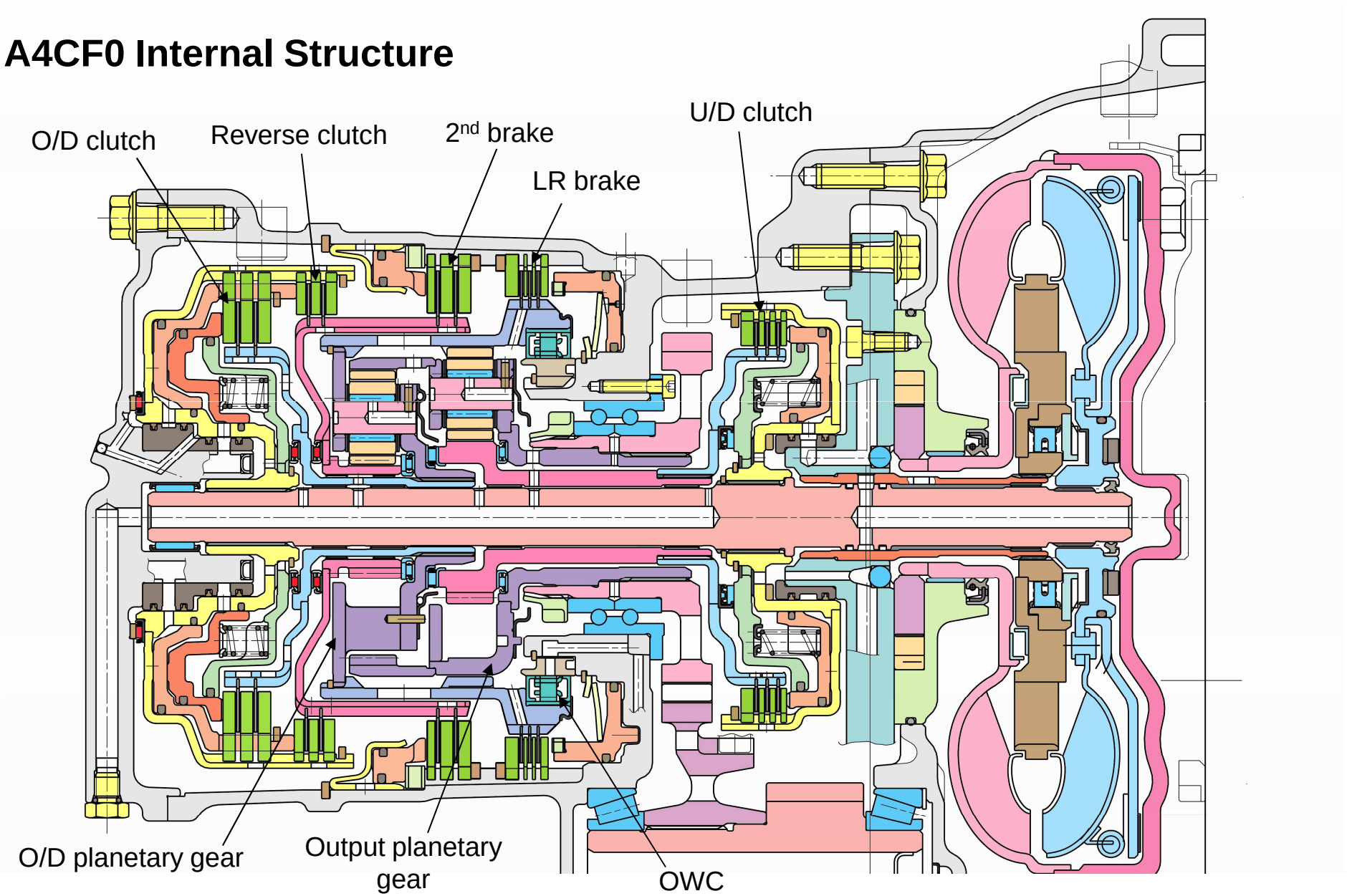

Simpo PDF Merge and Split Unregistered Version - http://www.simpopdf.com

A4CF0 Main Features

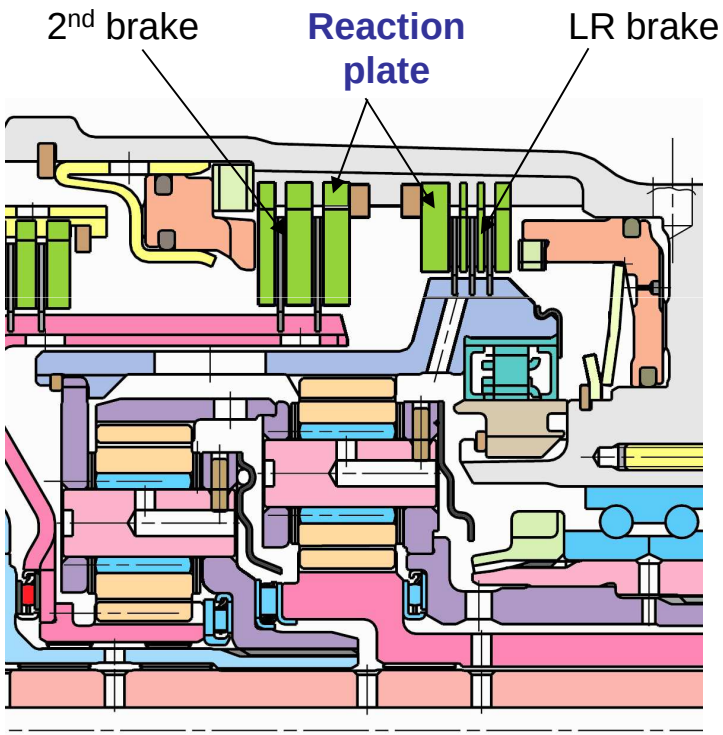

A4CF0

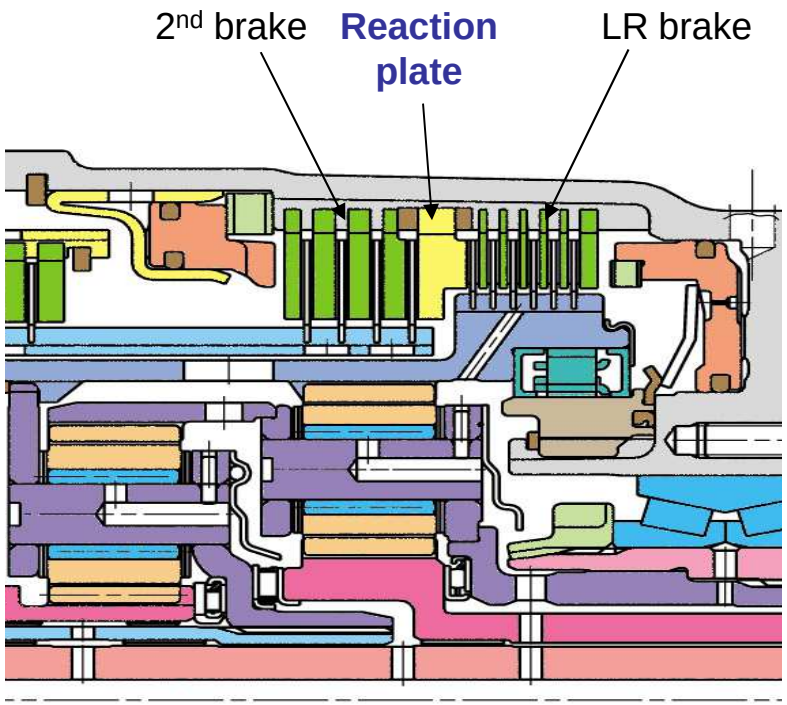

A4CF1, 2

Simpo PDF Merge and Split Unregistered Version - http://www.simpopdf.com

A4CF0 Main Features

Flat torque converter

Reduced number of disc

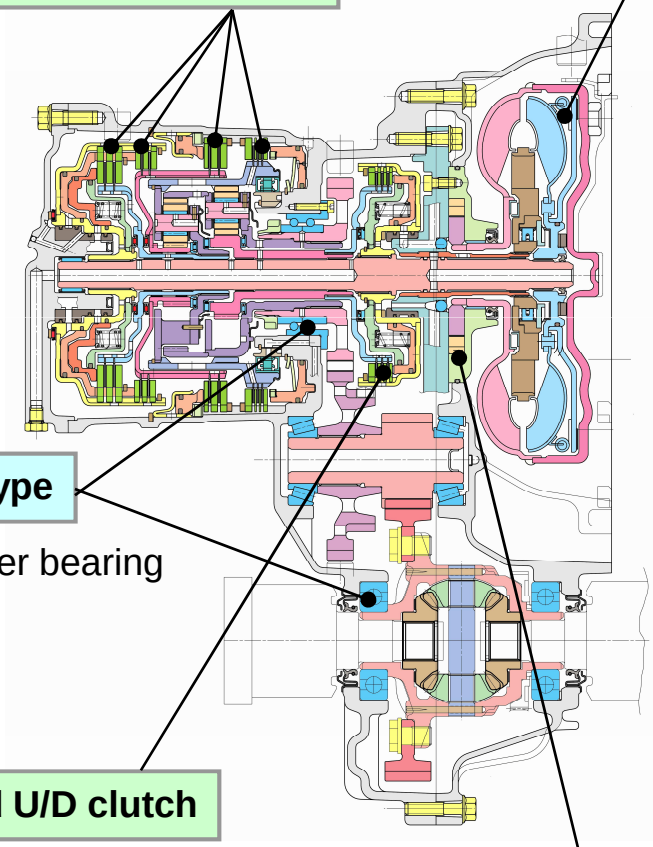

The parts of decreased size :

- **Overall length**
- **O/D carrier, O/P carrier**
- **Input shaft, Output shaft**

Changed bearing type

A4CF1&2: Taper roller bearing
A4CF0: Ball bearing

Reduced U/D clutch

Reduced oil pump capacity than A4CF1&2

Simpo PDF Merge and Split Unregistered Version - http://www.simpopdf.com

Specification

Items	A4CF0	A4CF1	A4CF2		A4AF3 (MC)
Engine	E-1.1, K-1.2	Г-1.6	B-II 2.0	U 1.6	Alpha II
Torque (kg · m)	12.5	15.5	24		14.6
Number of OWC	1	←	←	←	←
Number of Clutch	3	←	←	←	←
Number of Brake	2	←	←	←	←
Centrifugal Balance Chamber	3 (UD, OD, Reverse Clutch)				1 (Frt. Clutch)
Accumulator	4(UD,OD,2nd,LR)				1
Solenoid valves	6 (PWM-5, VFS-1)				6 (On,Off-3, PWM-3)
Gear Shift Position	6 with O/D switch	7 Modes (P,R,N,D,3,2,1)			6 with O/D switch

Simpo PDF Merge and Split Unregistered Version - http://www.simpopdf.com

Shift lever & Cluster

No indicator for A/T shift range
(P, R, N, D, 2, L) in the cluster

Simpo PDF Merge and Split Unregistered Version - http://www.simpopdf.com

Valve Body

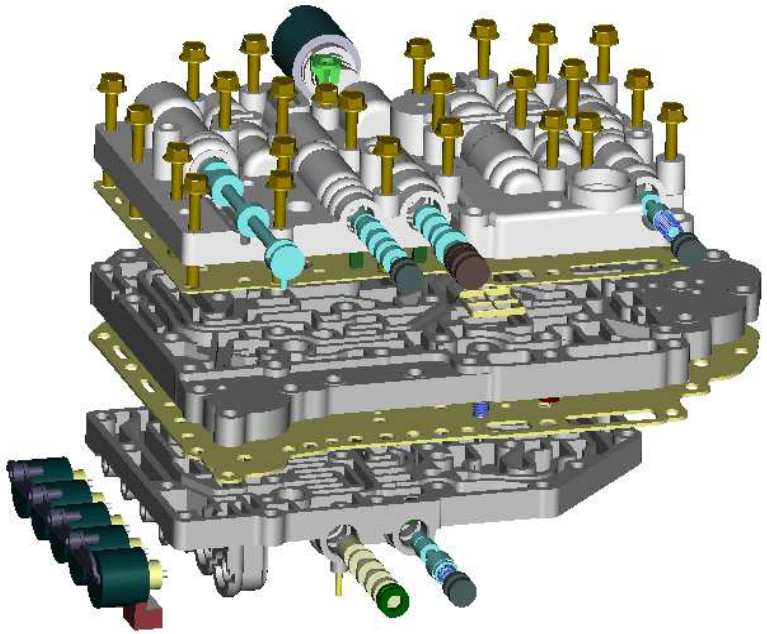

- Valve body and spool valve are from Alloy
- Full line pressure control
- Individual Clutch to Clutch Control

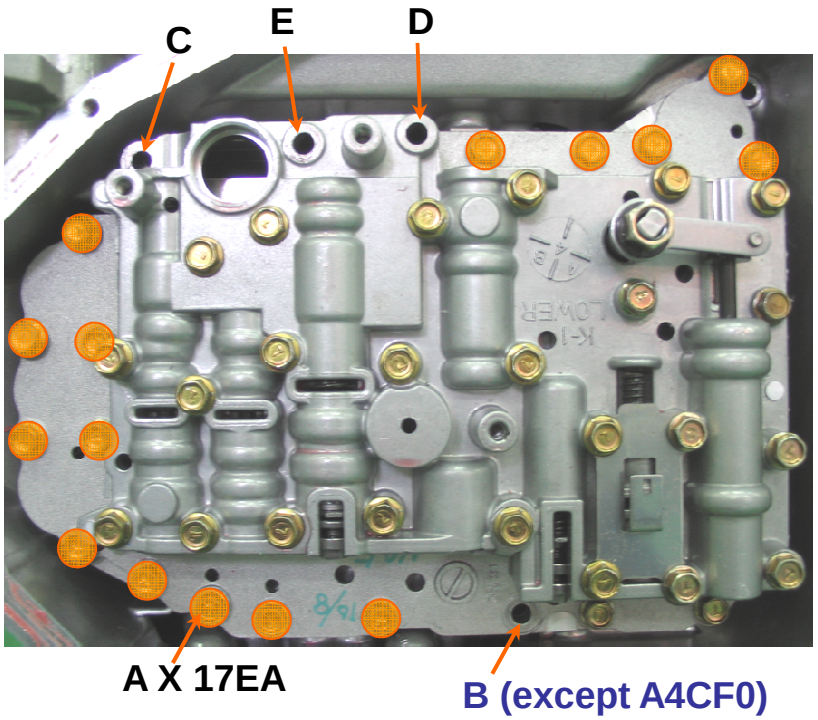

Valve body mounting bolt location

*** To remove the valve body,**

- A type (6x30mm) : 17EA
- B type (6x35mm) : 1EA
- C type (6x40mm) : 1EA
- D type (6x55mm) : 1EA
- E type (6x60mm) : 1EA

Simpo PDF Merge and Split Unregistered Version - http://www.simpopdf.com

Solenoid Valve

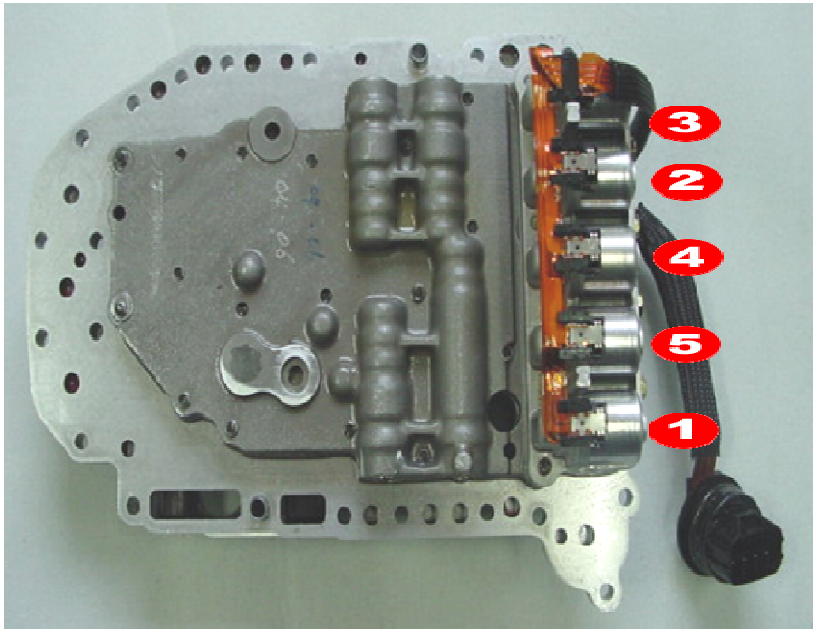

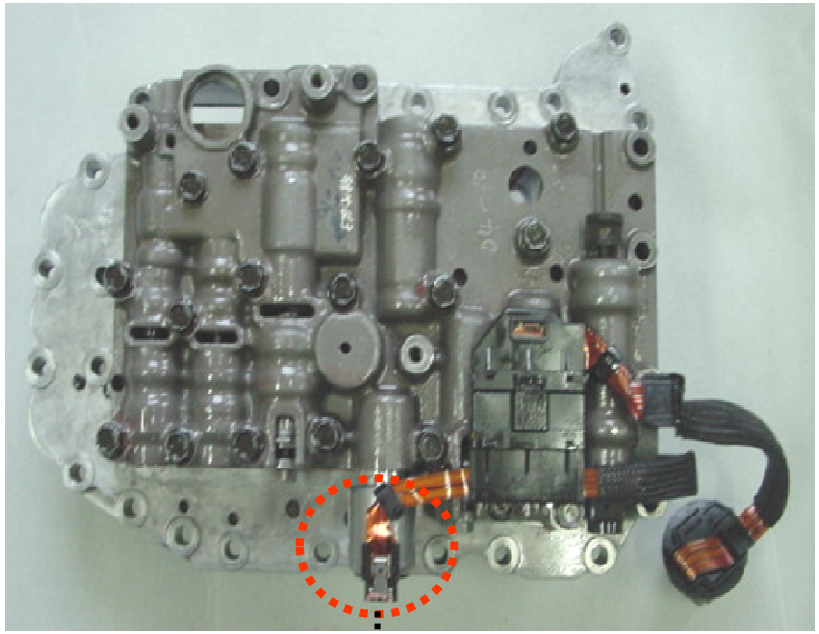

VFS Solenoid

1. PCSV - A : O/D or LR Solenoid
2. PCSV - B : 2nd or REV Solenoid
3. PCSV - C : UD Solenoid
4. PCSV - D : Damper Clutch Solenoid
5. On/Off Sol V/V : Switching PCSV – A from LR to O/D
   (Switch on – LR engaged, off- O/D engaged)

*** Each solenoid can be interchangeable except VFS (Variable Force Solenoid)**

Simpo PDF Merge and Split Unregistered Version - http://www.simpopdf.com

Solenoid Valve Current Control

VFS

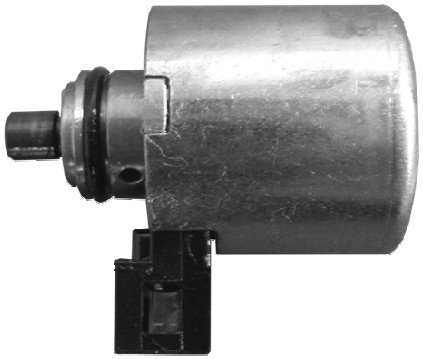

PCSV & SCSV

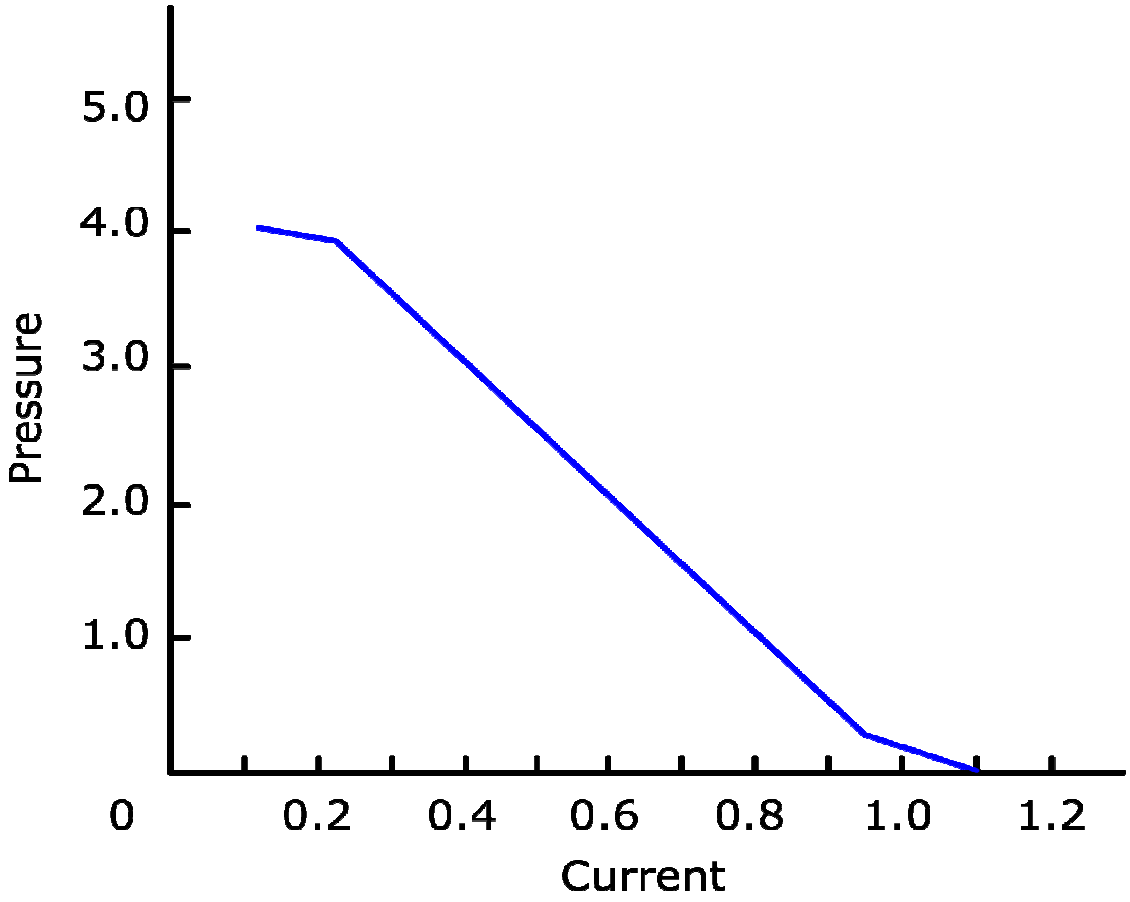

Simpo PDF Merge and Split Unregistered Version - http://www.simpopdf.com

Accumulator

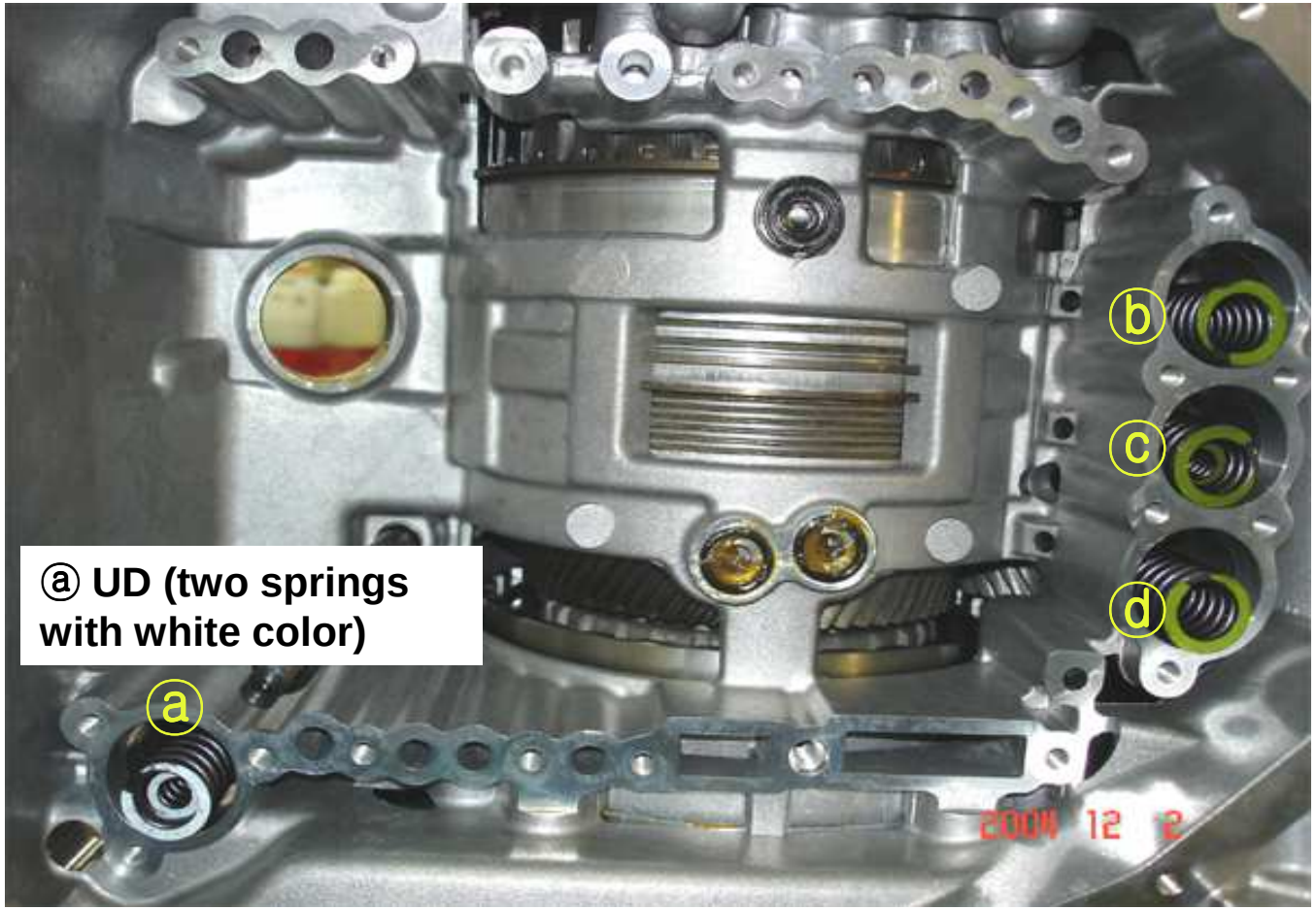

ⓑ OD (one spring with yellow color)

ⓒ 2nd (two springs with yellow color)

ⓓ L/R (one spring with yellow color)

*** Each Spring can be interchangeable except white one**

Simpo PDF Merge and Split Unregistered Version - http://www.simpopdf.com

Hydraulic Pressure Checking Port

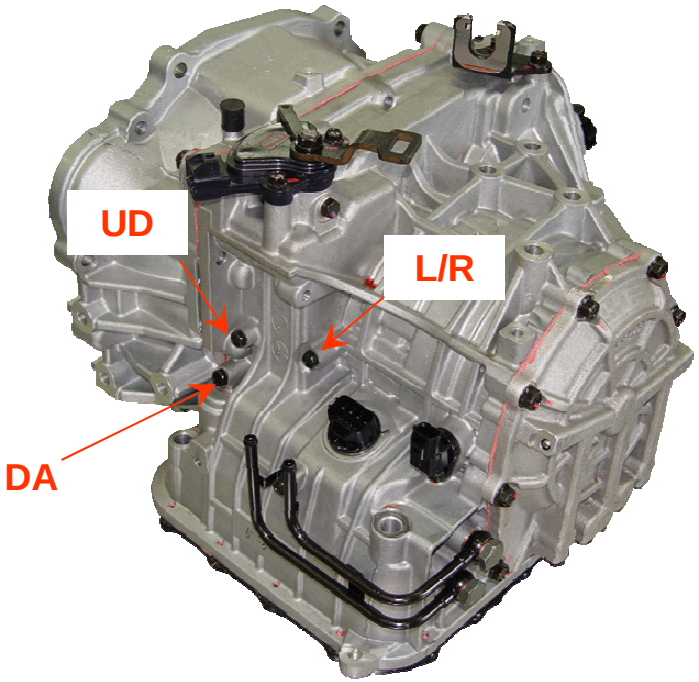

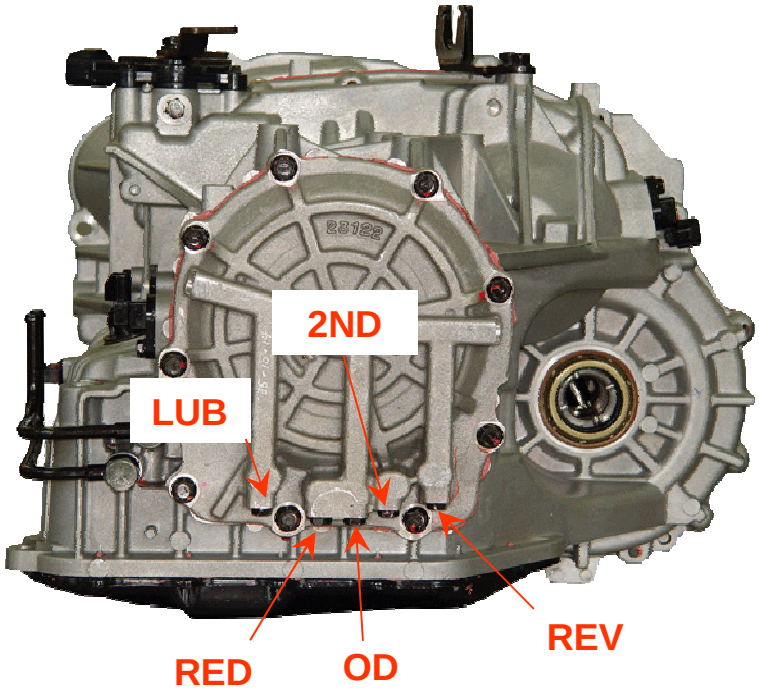

*** Totally 8 checking ports are used.**

- UD : UD Clutch
- L/R : L/R Brake
- DA : Damper Clutch Apply
- LUB : Lubrication Pressure
- RED : Reducing Pressure
- O/D : O/D Clutch
- 2nd : 2nd Brake
- REV : Reverse Clutch

Simpo PDF Merge and Split Unregistered Version - http://www.simpopdf.com

Pressure Circuit (P/N)

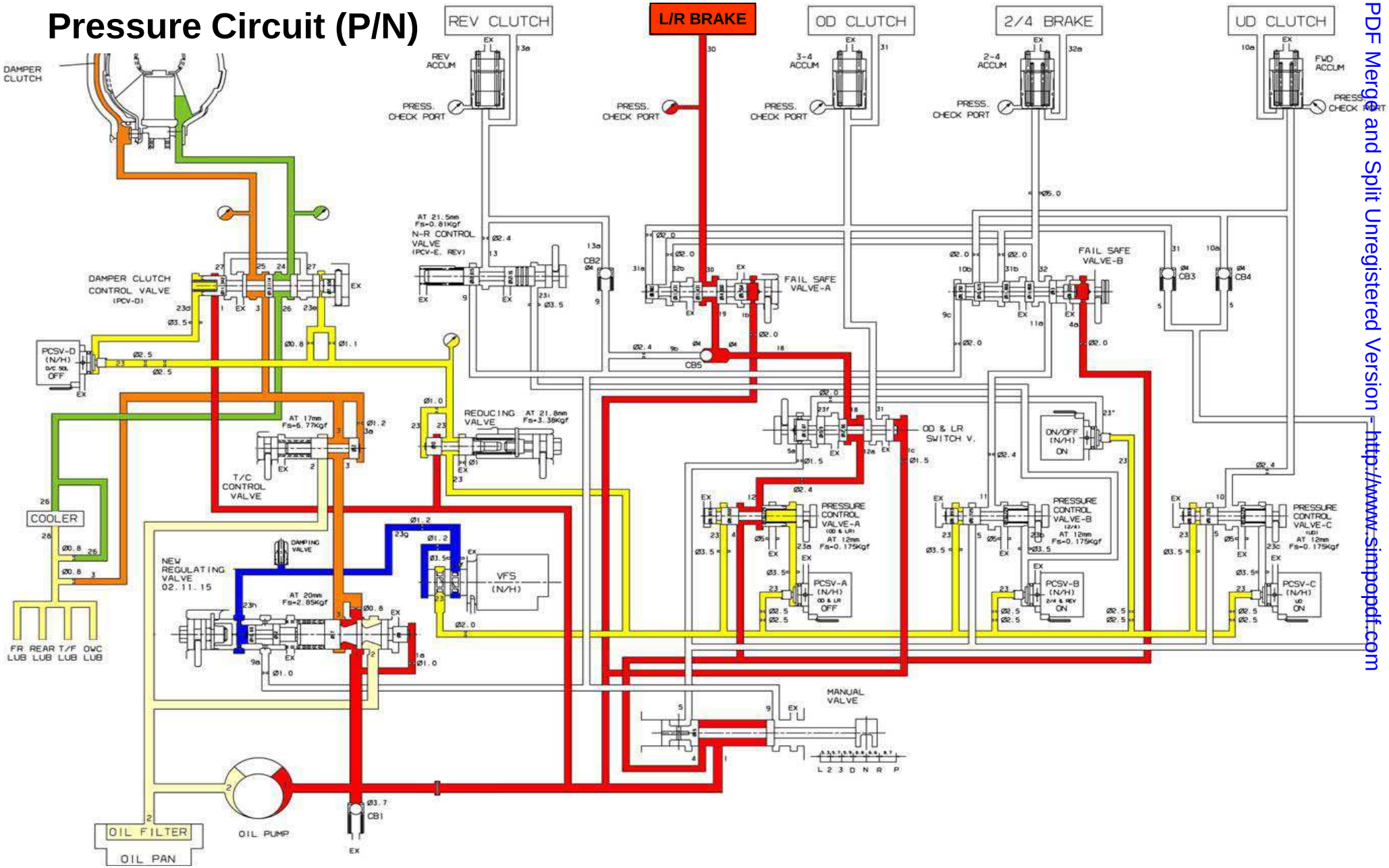

Simpo PDF Merge and Split Unregistered Version - http://www.simpopdf.com

VFS (Variable Force Solenoid)

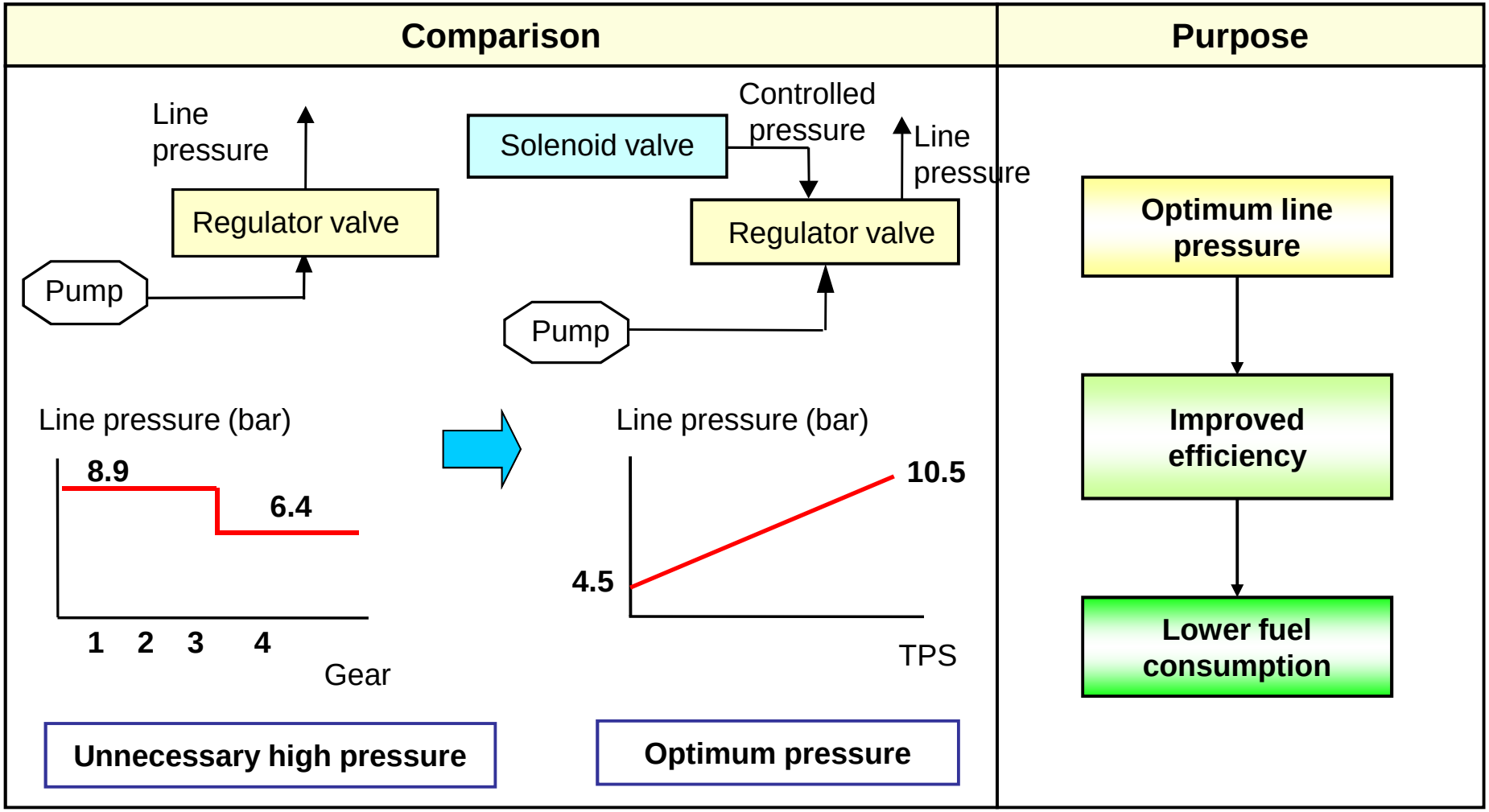

*** Advantage : To improve fuel consumption by reducing unnecessary high pressure**

Simpo PDF Merge and Split Unregistered Version - http://www.simpopdf.com

VSS (Vehicle Speed Sensor)

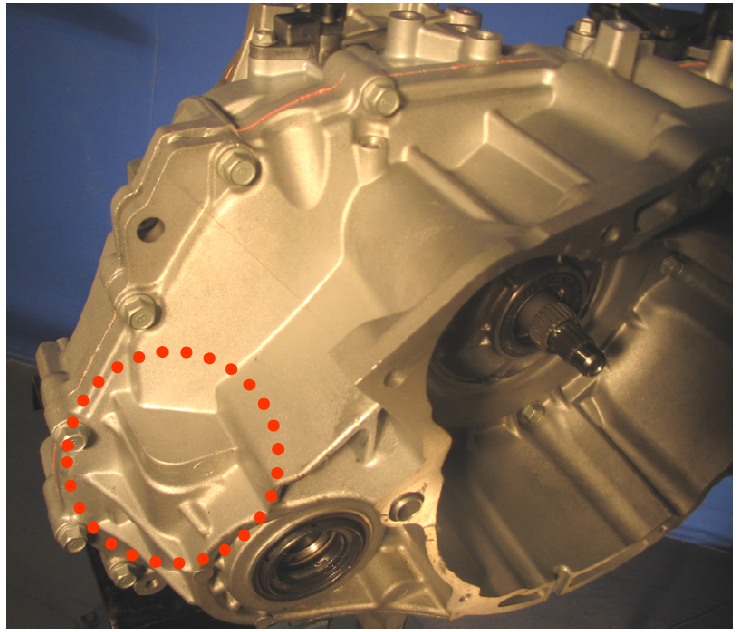

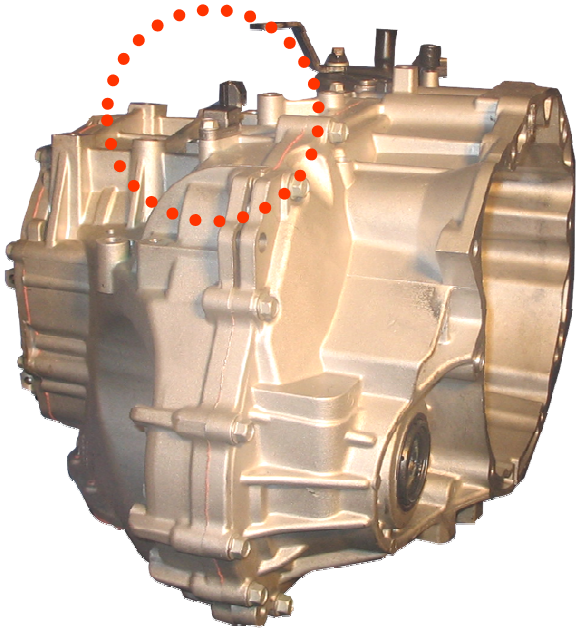

VSS is eliminated in A4CF0. Instead of this, output speed sensor (PG-B) is used for PCM.

Simpo PDF Merge and Split Unregistered Version - http://www.simpopdf.com

FPC (Flexible Printed Circuit) Harness

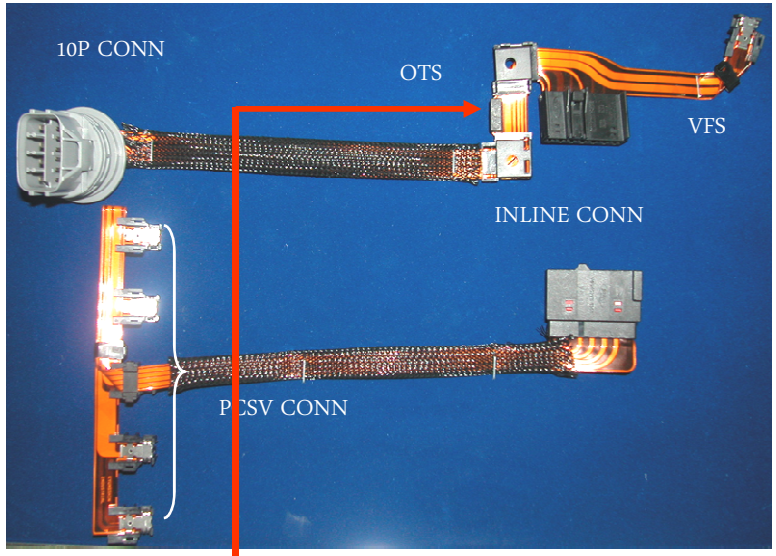

(A4CFx)

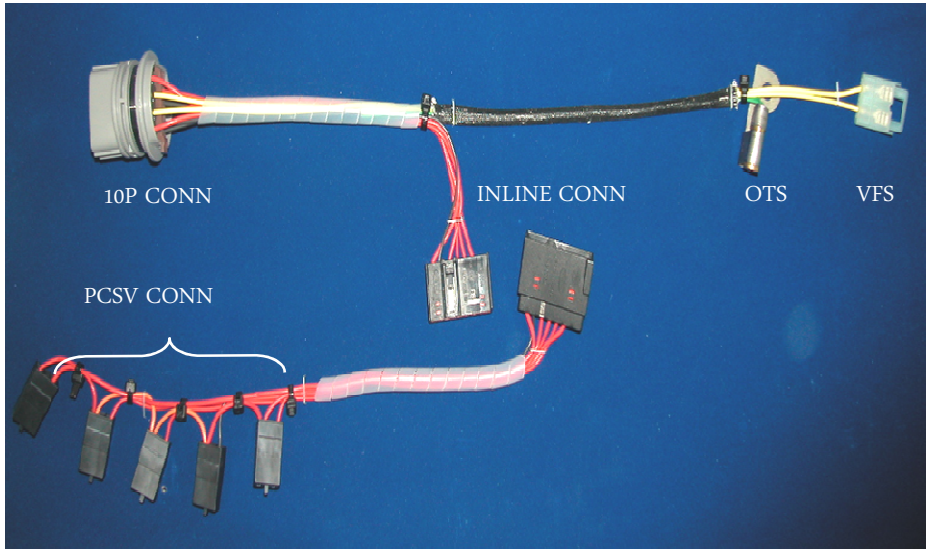

(A4AFx)

(OTS)

Simpo PDF Merge and Split Unregistered Version - http://www.simpopdf.com

Operation table

Items		Solenoid Valve (0%:OFF, 100%:ON)				
Range	Operation	PCSV-A (OD&LR)	PCSV-B (2ND&RVS)	PCSV-C (UD)	PCSV-D (DCCSV)	ON/OFF SOL.
P, N	LR	OFF	ON	ON	OFF	ON
(D,2) 1st	UD	*OFF→ON	ON	OFF	OFF	*ON→OFF
(D,2) 2nd	UD, 2ND	ON	OFF	OFF	ON	OFF
(D) 3rd	UD, OD	OFF	ON	OFF	ON	OFF
D-4	OD, 2ND	OFF	OFF	ON	ON	OFF
R	LR, RVS	OFF	OFF	ON	OFF	ON
(L) 1st	UD, LR	OFF	ON	OFF	OFF	ON

* Vehicle stop → Wheel rotates

Simpo PDF Merge and Split Unregistered Version - http://www.simpopdf.com

Input & Output

Input

- Battery Power
- GND
- PG-A & PG-B
- OTS
- Inhibitor Switch
- O/D OFF Switch
- Stop Lamp Switch
- CAN Communication

PCM (TCM)

Output

- VFS
- PCSV – A(LR&OD)
- PCSV – B(2nd&REV)
- PCSV – C(UD)
- PCSV – D(DCC)
- SCSV – A (On/Off)
- Vehicle Speed
  - Cluster
  - MDPS control module
  - BCM

Simpo PDF Merge and Split Unregistered Version - http://www.simpopdf.com

Input (PG-A) and Output Speed Sensor (PG-B)

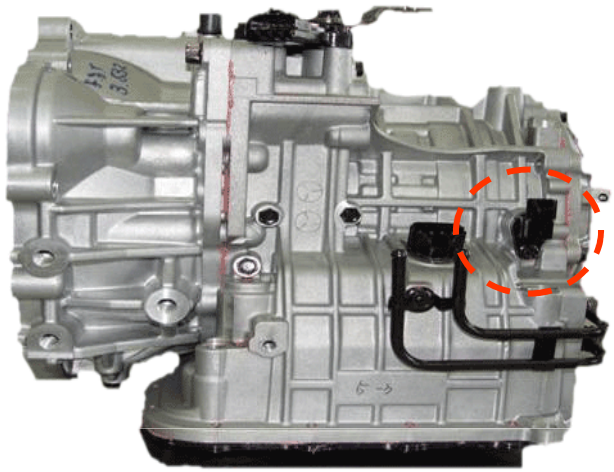

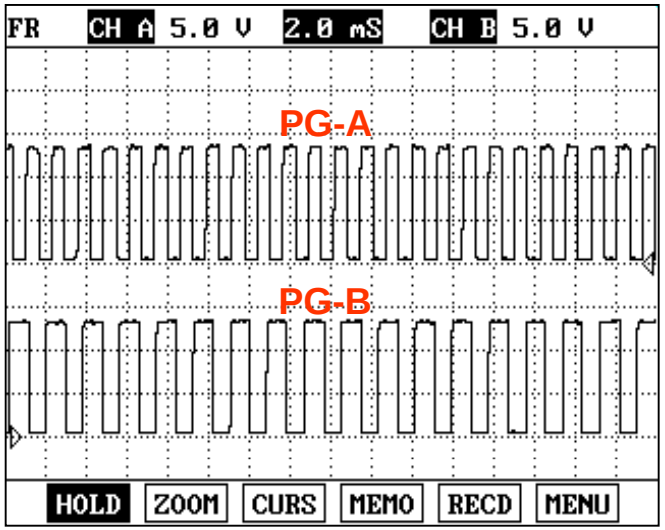

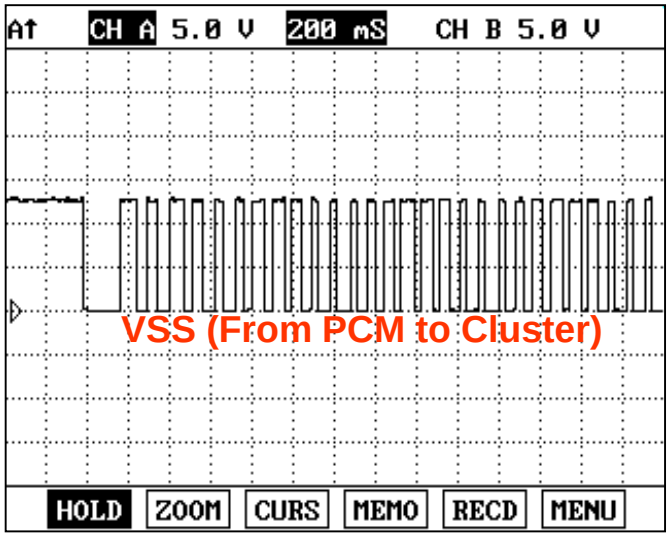

Simpo PDF Merge and Split Unregistered Version - http://www.simpopdf.com

PG-A & PG-B Failure

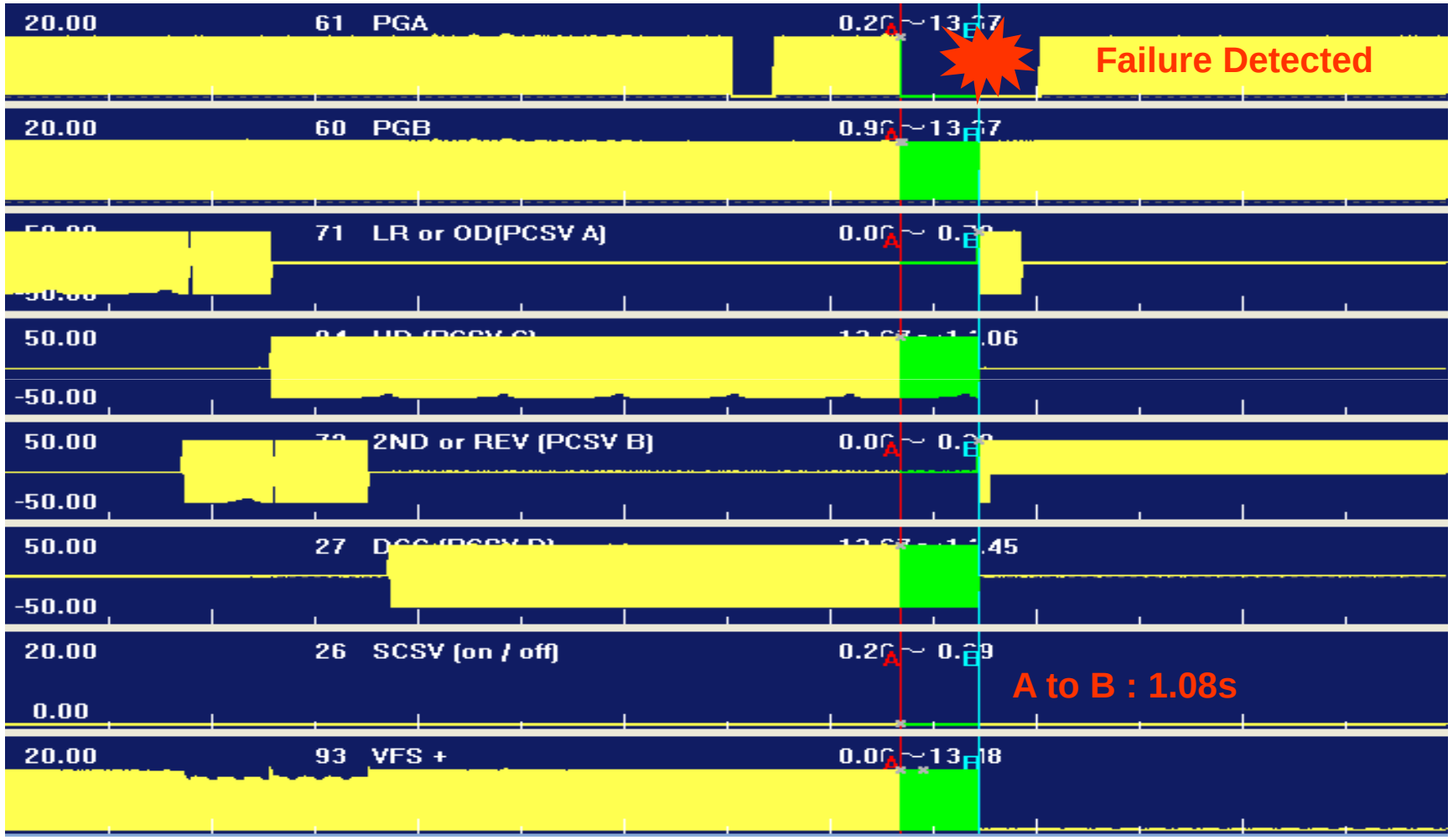

*** When PG-A or PG-B failure is detected, electrically gear is fixed to 3rd gear.**

Simpo PDF Merge and Split Unregistered Version - http://www.simpopdf.com

OTS (Oil Temperature Sensor)

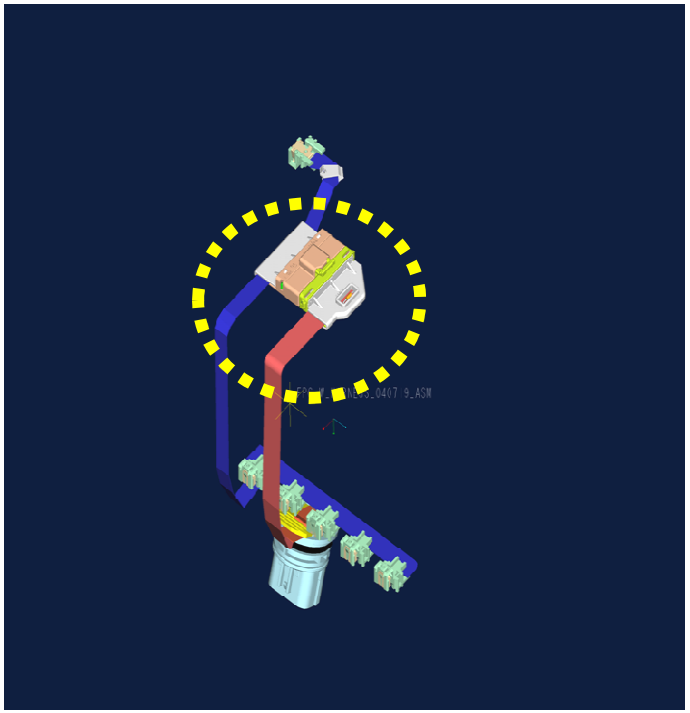

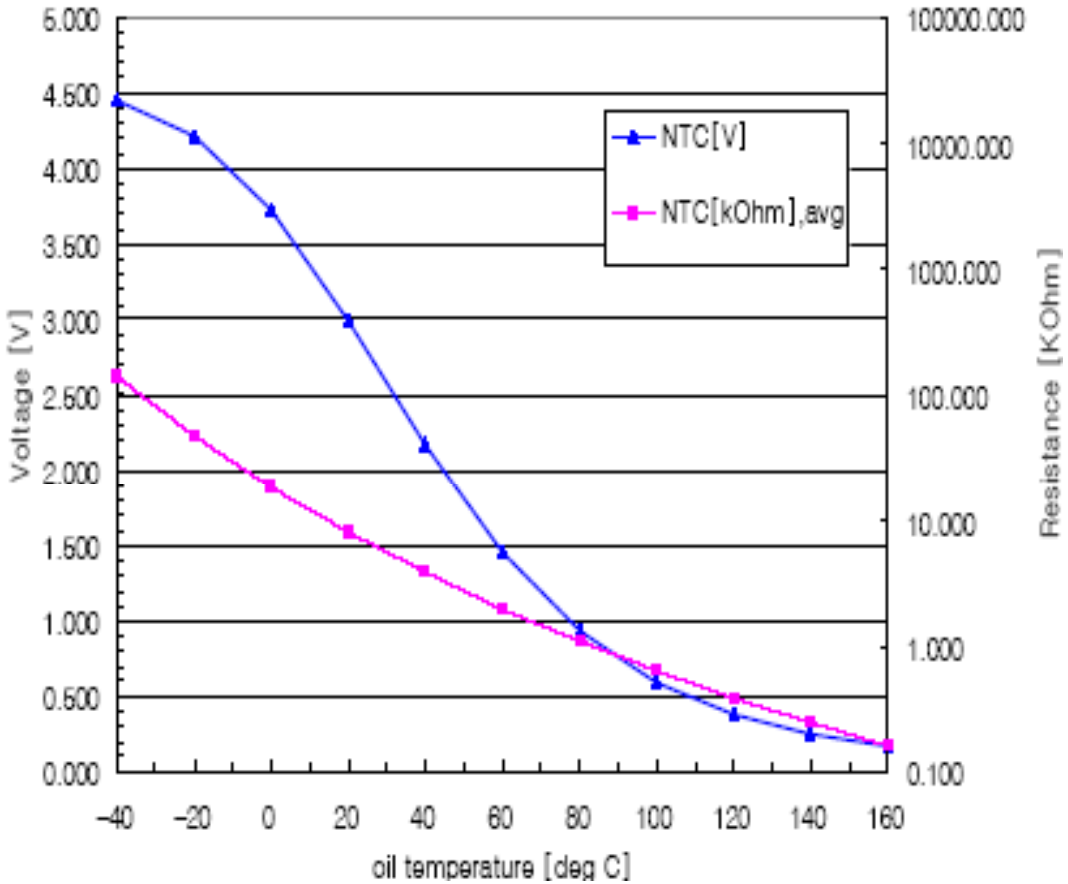

*** When OTS failure is detected, OTS current data sets to 80℃.**

Simpo PDF Merge and Split Unregistered Version - http://www.simpopdf.com

Solenoid Valve Circuit

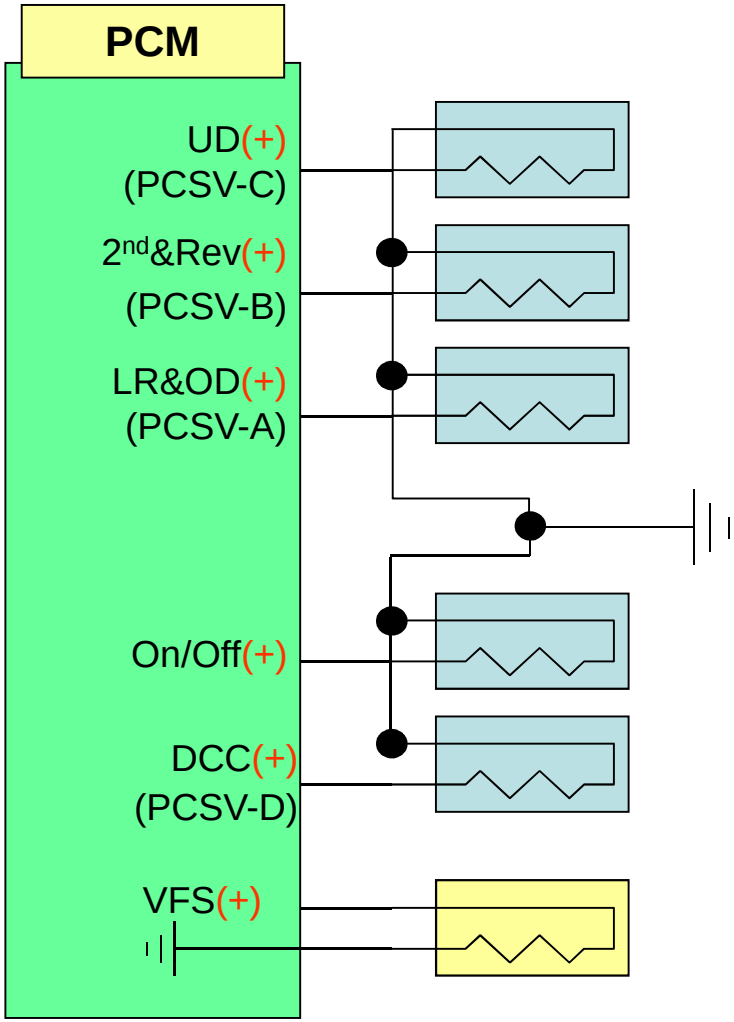

KEFICO (Epsilon 1.1)

Simpo PDF Merge and Split Unregistered Version - http://www.simpopdf.com

Solenoid valve control

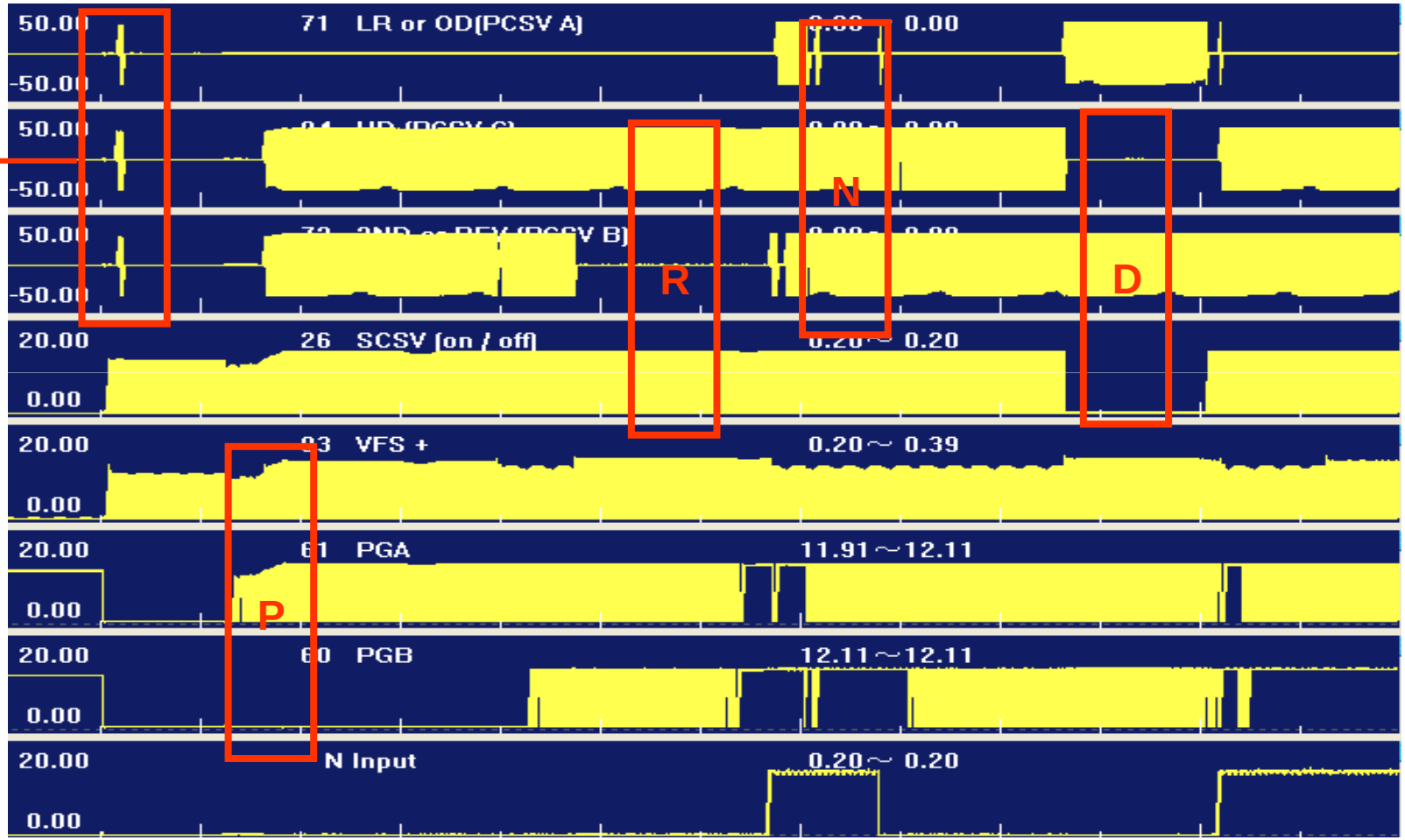

*** Solenoid failure checking for 80ms.**

Simpo PDF Merge and Split Unregistered Version - http://www.simpopdf.com

Solenoid Valve Fail (3rd Gear Fixed)

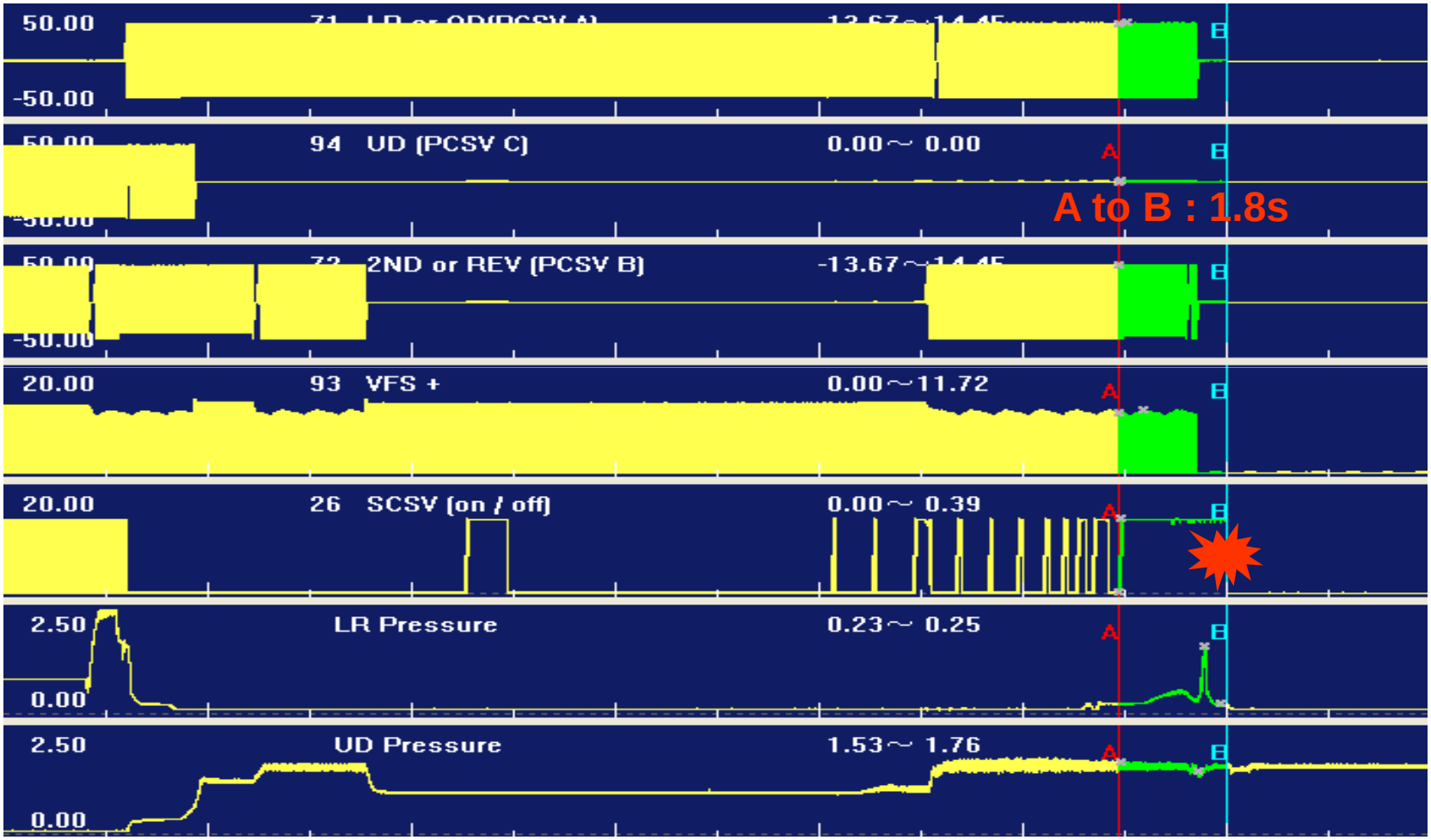

*** SCSV solenoid valve shorts to ground during driving under 3rd gear resulting in mechanical 3rd gear fixed condition.**

Simpo PDF Merge and Split Unregistered Version - http://www.simpopdf.com

Resetting Auto T/A Values

Resetting Auto T/A Values

[Resetting Auto T/A Values]

This function is for resetting the adaptive values from the used Auto T/A when replacing it.

<Condition>

1. IG. Key On
2. Transaxle Range : P
3. Vehicle Speed : 0 km/h
4. Engine Off

Reset Cancel

Simpo PDF Merge and Split Unregistered Version - http://www.simpopdf.com

CAN Communication

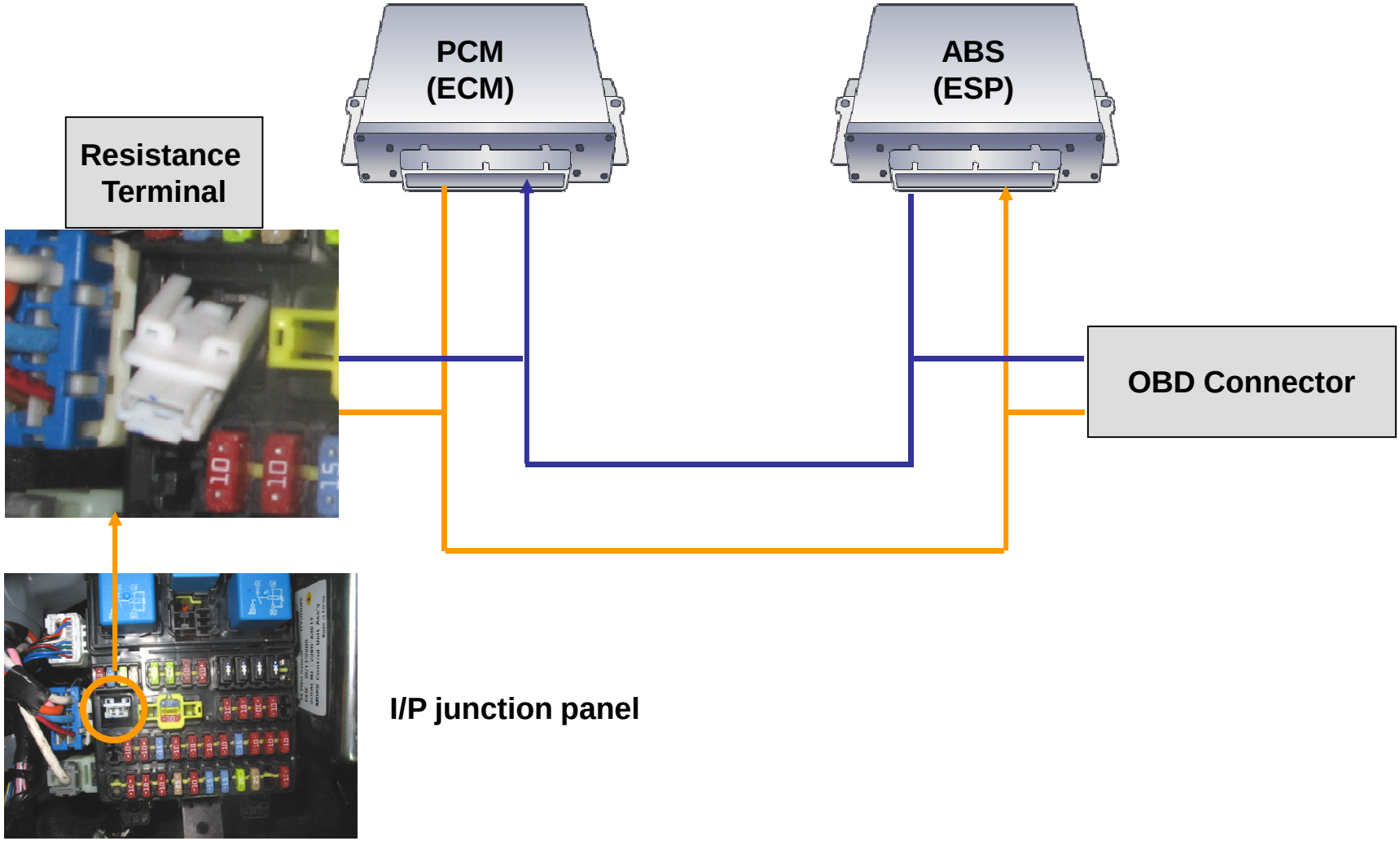

Simpo PDF Merge and Split Unregistered Version - http://www.simpopdf.com

PA ESP

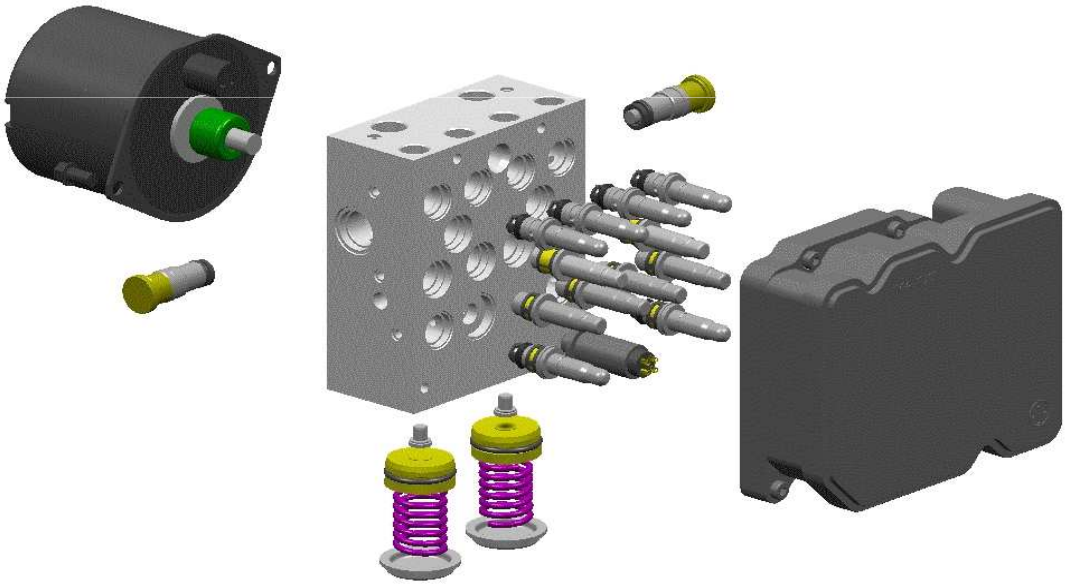

Copyright by Hyundai Motor Company. All rights reserved.

Simpo PDF Merge and Split Unregistered Version - http://www.simpopdf.com

Comparison

Item	MGH 10	MGH 20	MGH 25	MGH 40
Model			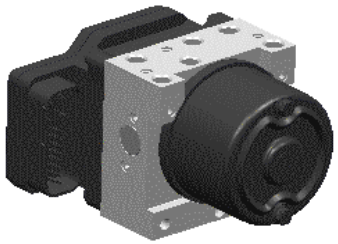	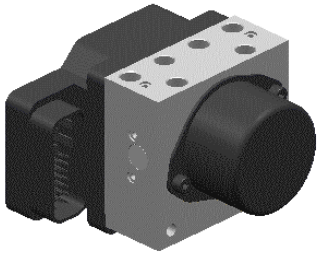
Application	LC, XD, SM	GK, FC	JM	EN, TQ, PA
MP year	1999 (ABS) 2000 (TCS)	2001 (TCS)	2003 (ABS) 2004 (ESP)	Aug. 2006 (ESP)
Key Points	On-Off valve control		LFC + MSC +PBA + MIRC LFC: Linear flow control MSC: Motor speed control PBA: Panic brake assist MIRC: Modified independent rear control	LFC + MSC + PBA + MIRC + ROP ROP: Roll over prevention (not for PA)

Simpo PDF Merge and Split Unregistered Version - http://www.simpopdf.com

Comparison

Items	ABS	ESP
HECU Assembly		
Wheel speed sensor		
Yaw & lateral G-sensor	-	
Pressure sensor	-	*Built in type*
Steering angle sensor	-	
Longitudinal G-sensor (4WD only)		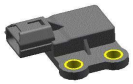

Simpo PDF Merge and Split Unregistered Version - http://www.simpopdf.com

ESP Components

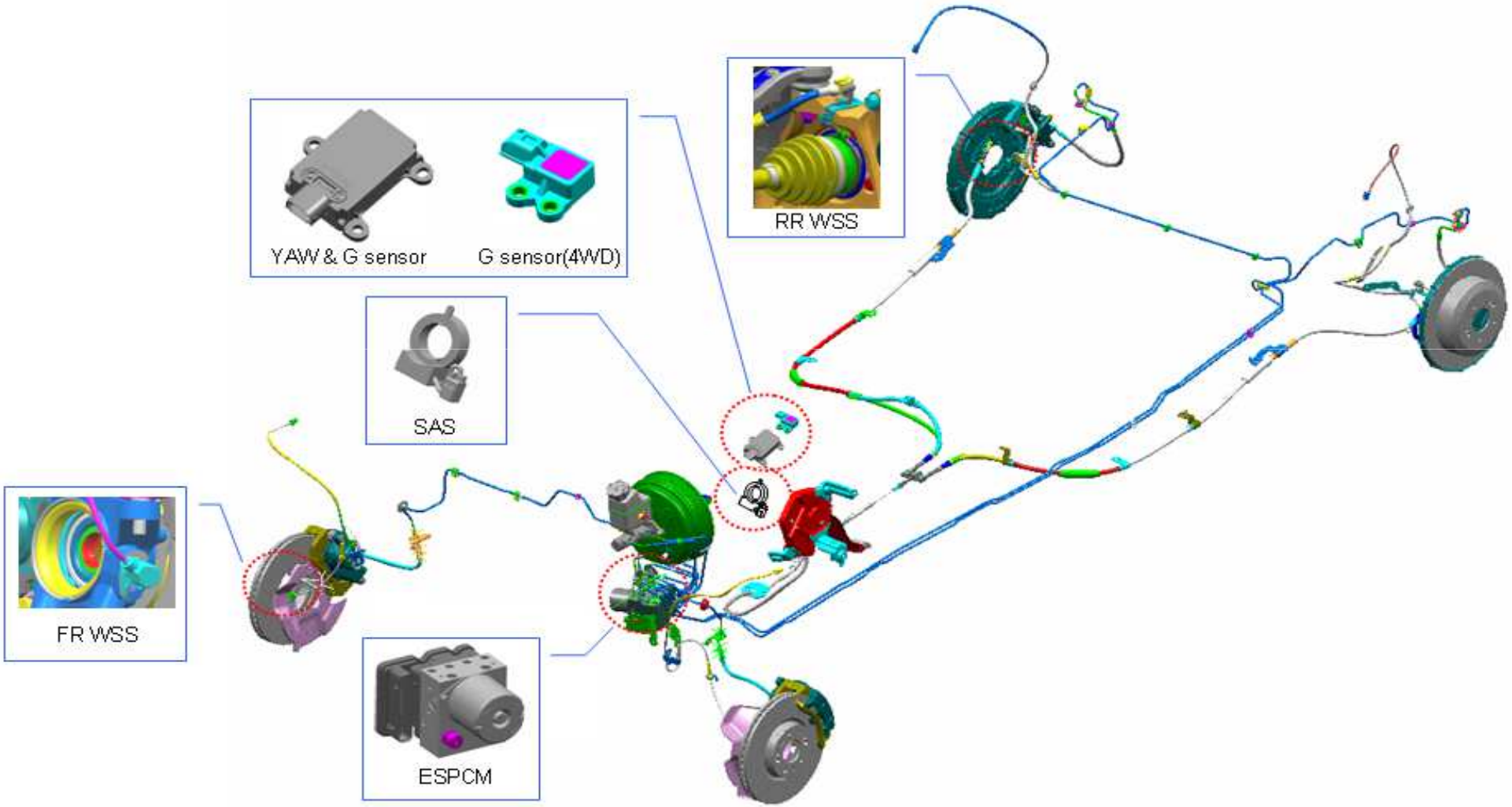

Simpo PDF Merge and Split Unregistered Version - http://www.simpopdf.com

Components of HECU

MGH-40 ABS

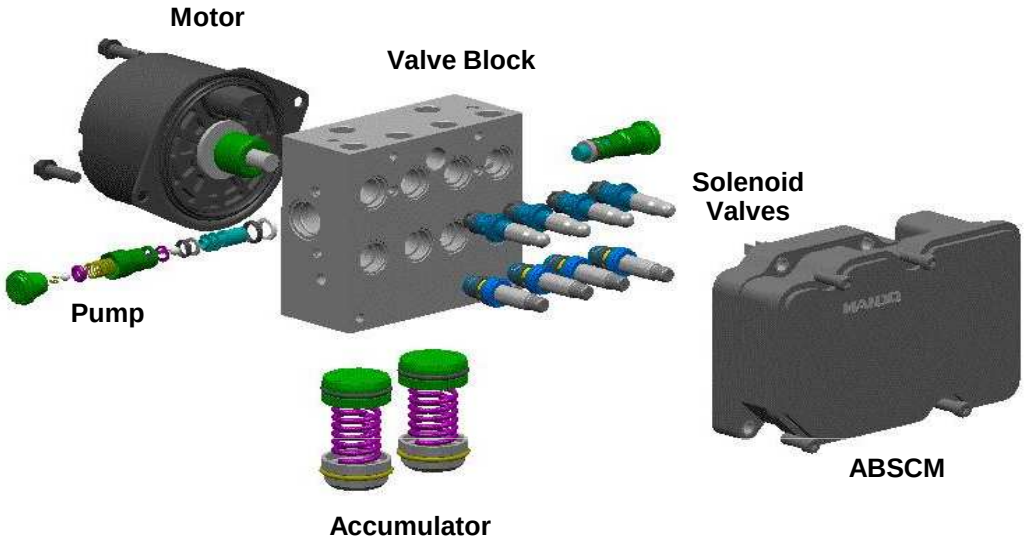

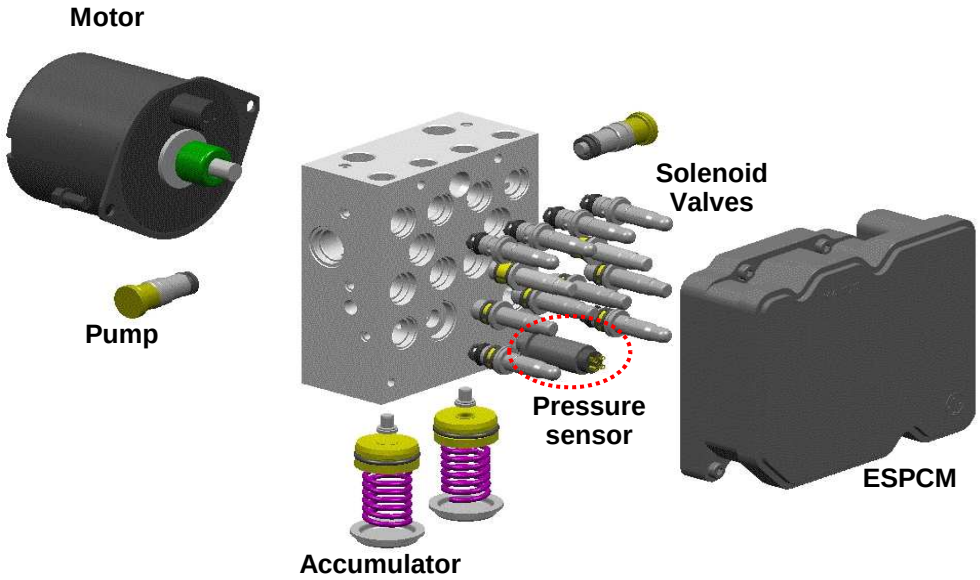

MGH-40 ESP

Simpo PDF Merge and Split Unregistered Version - http://www.simpopdf.com

Features

LFC (Linear Flow Control)

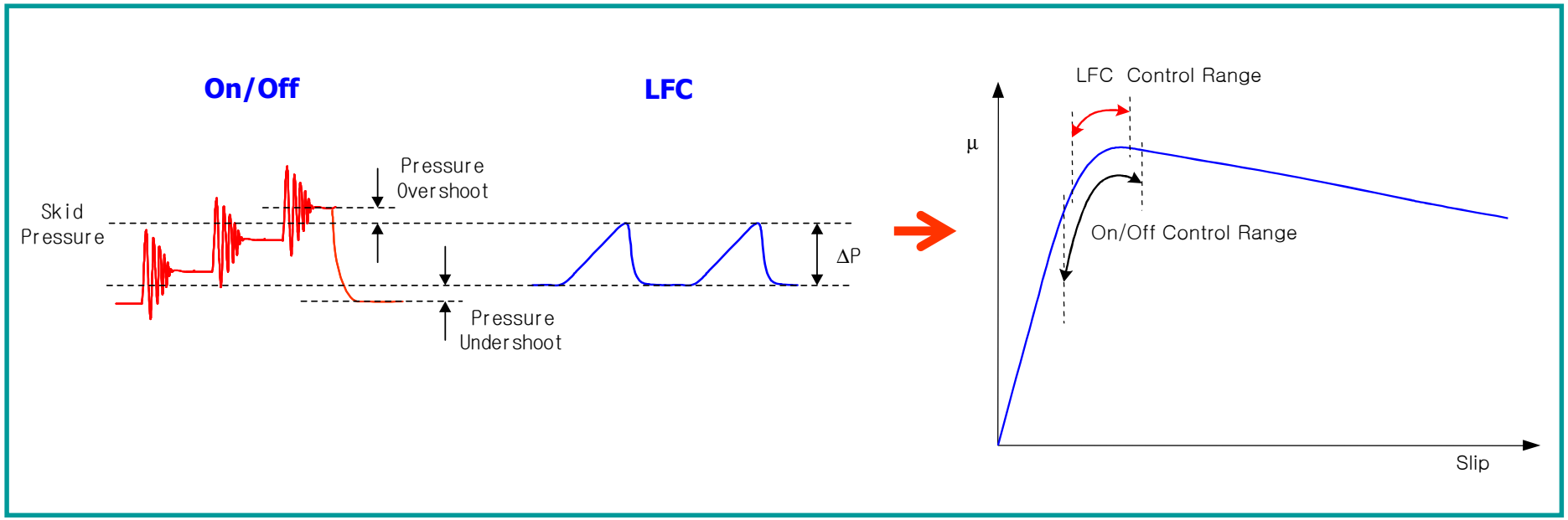

Simpo PDF Merge and Split Unregistered Version - http://www.simpopdf.com

Features

MSC (Motor Speed Control)

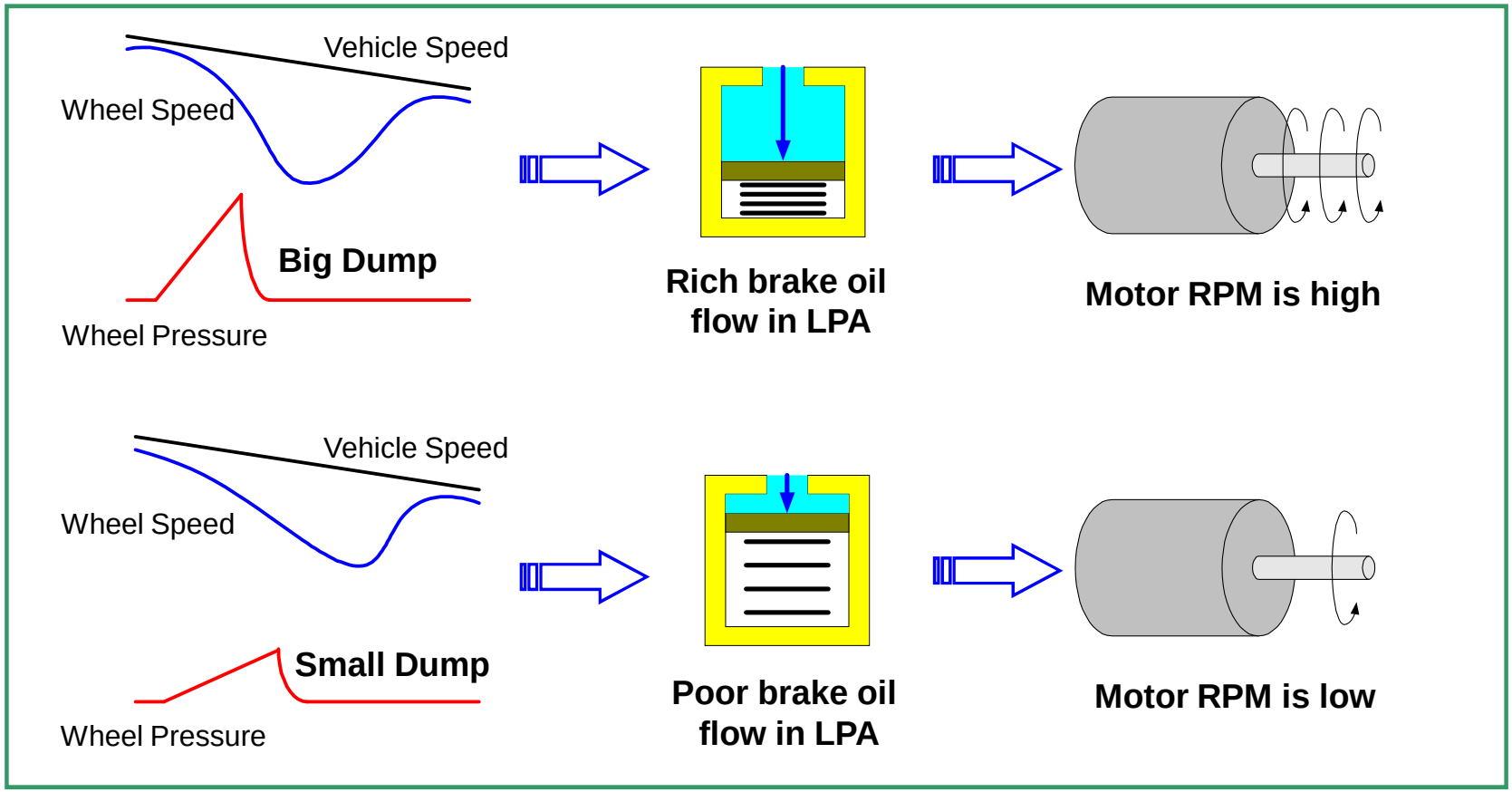

Simpo PDF Merge and Split Unregistered Version - http://www.simpopdf.com

Features

MIRC (Modified Independent Rear Control)

- Enhancement of braking performance

- Independent pressure control according to rear wheel movement

(for the vehicle safety, the control is limited : pressure difference RR vs. RL is less then 20 bar)

- Application : ABS, ESP

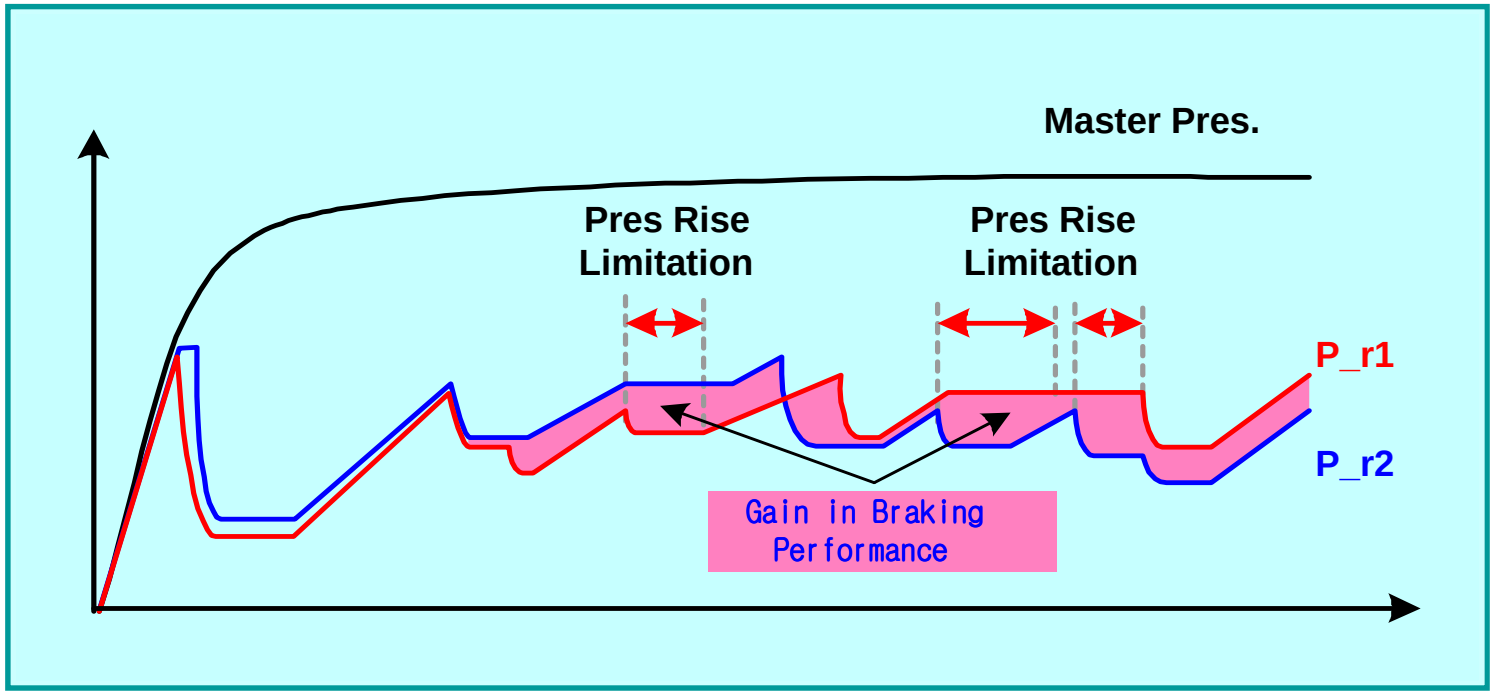

Simpo PDF Merge and Split Unregistered Version - http://www.simpopdf.com

Inputs & Outputs

MGH-40 ESP

- WSS (4EA)
- Steering Angle Sensor
- Yaw rate & Lateral G- sensor (CAN)
- Pressure Sensor
- Brake Switch
- ESP OFF Switch
- Longitudinal G- sensor (4WD only)

→ **ESPCM** →

- Motor Pump
- Solenoid Valves
- EPS OFF Warning Lamp
- ESP Function Lamp
- ABS Warning Lamp
- EBD Warning Lamp

CAN
Diagnosis with scan tool
Engine torque reduction request
Gear hold request
ABS Active Signal
Wheel speed information and so on.

Simpo PDF Merge and Split Unregistered Version - http://www.simpopdf.com

Active Wheel Speed Sensor

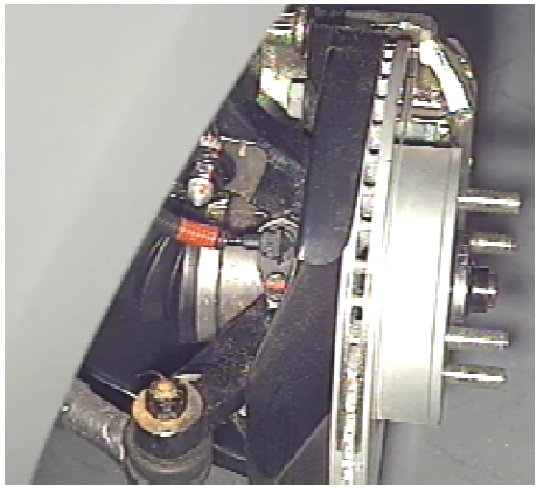

Front

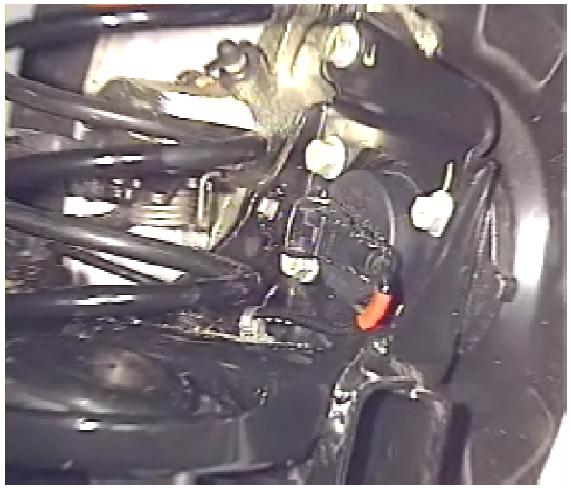

Rear

- Type: Active type (Hall effect)
- Power supply: 12V
- Air gap: 0.2~2.0mm
- Frequency: 1~2,500Hz
- Possible to detect 0km/h
- Not sensitive to the noise and air gap.

OUTPUT SIGNAL		MAX	TYPICAL	MIN
LOWER SIGNAL	I_{LOW} (mA)	5.9	7	8.4
UPPER SIGNAL	I_{HIGH} (mA)	11.8	14	16.8
SIGNAL RATIO	I_{HIGH} / I_{LOW}	1.85 or more		
OPERATING FREQUENCY		1 ~ 2500 Hz		
OPERATING DUTY		30~70%		

Simpo PDF Merge and Split Unregistered Version - http://www.simpopdf.com

Yaw rate & Lateral G-Sensor

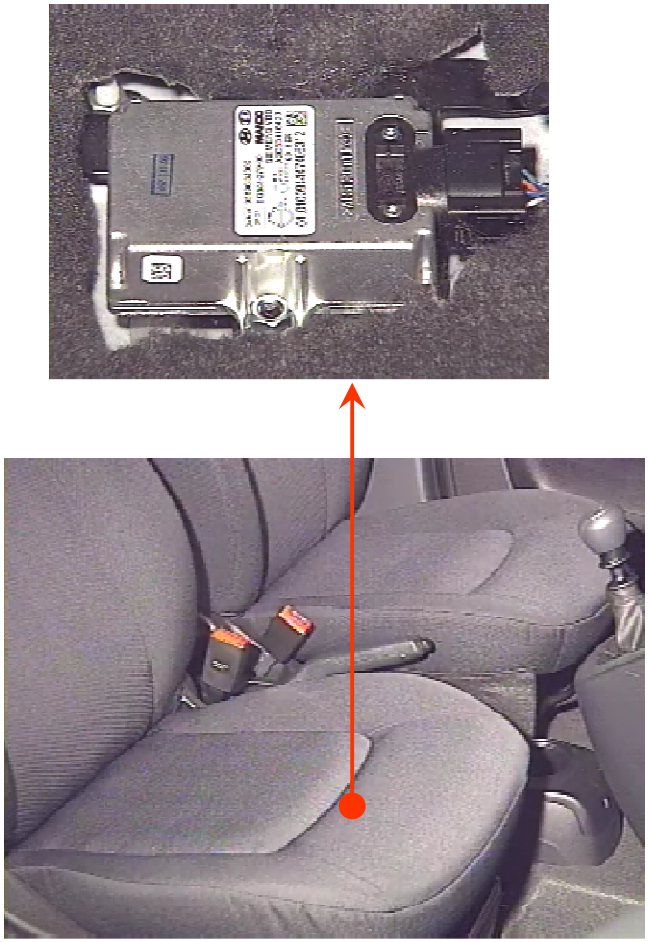

[Location] – Under passenger seat

- Power supply: 6.5~18V
- Signal output: *CAN interface*
- G sensor : -1.5~1.5g
- Yaw sensor: -75~75°/sec

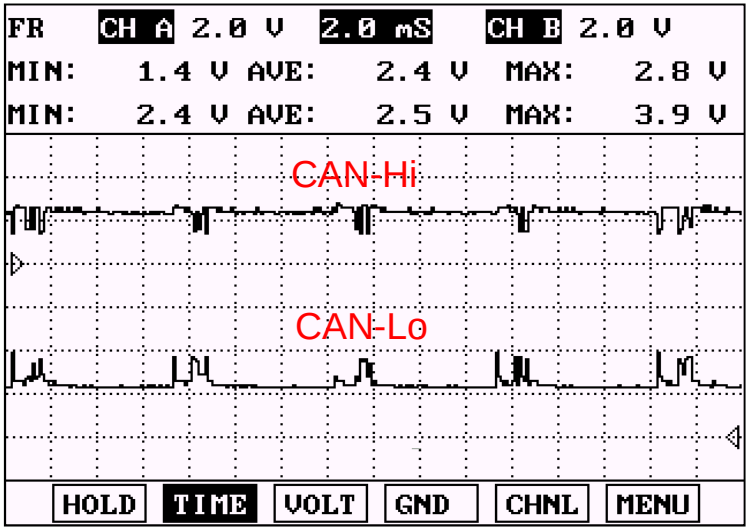

[Output Signal]

Simpo PDF Merge and Split Unregistered Version - http://www.simpopdf.com

Steering Angle Sensor

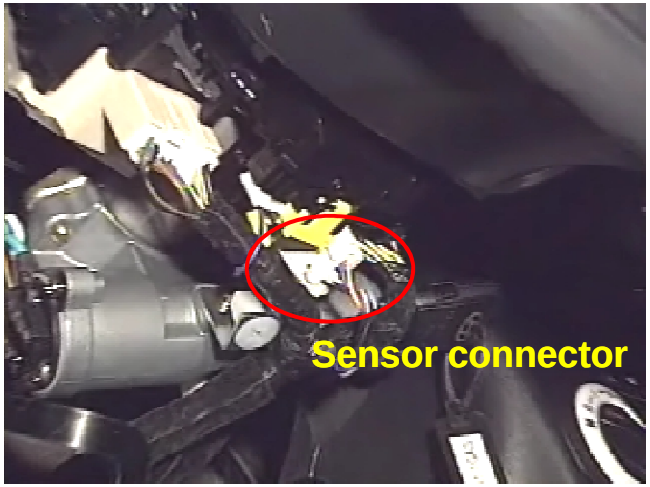

- Location: Inside steering wheel
- Calculate the steering amount and direction
- 3 Input signals (ST 1, ST 2, ST N)
- ST N detects the neutral position of steering wheel

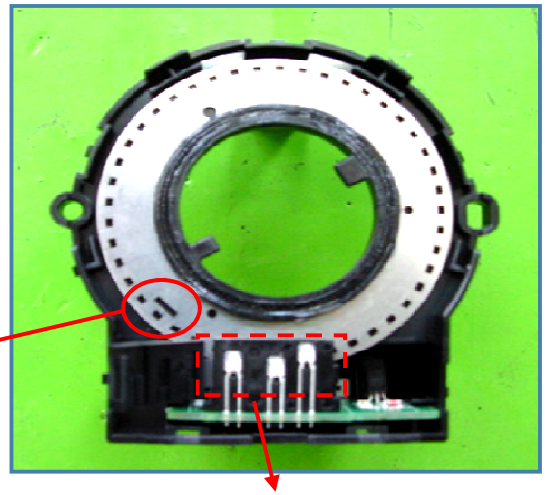

- Sensor type : Photo interrupt type
- Sensor output type : Open Collector Type
- Output pulse quantity :45pulse
  (Pulse cycle 8°)
- Supply voltage :IGN1(8~16V)
- Output voltage :$1.3 \le V_{OL} \le 2.0V$,
  $3.0 \le V_{OH} \le 4.1V$

Simpo PDF Merge and Split Unregistered Version - http://www.simpopdf.com

Steering Angle Sensor

Output signal

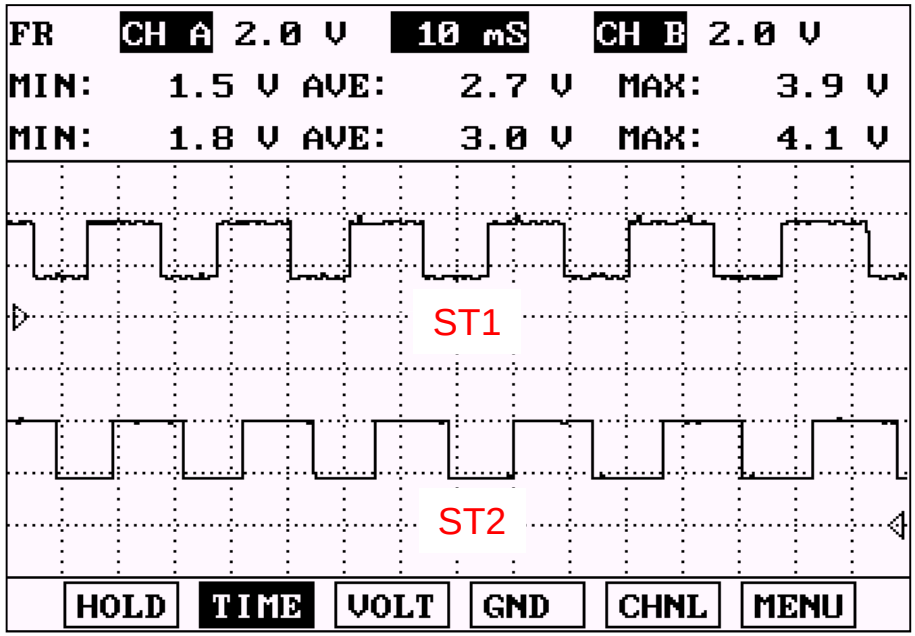

[ST1, ST2]

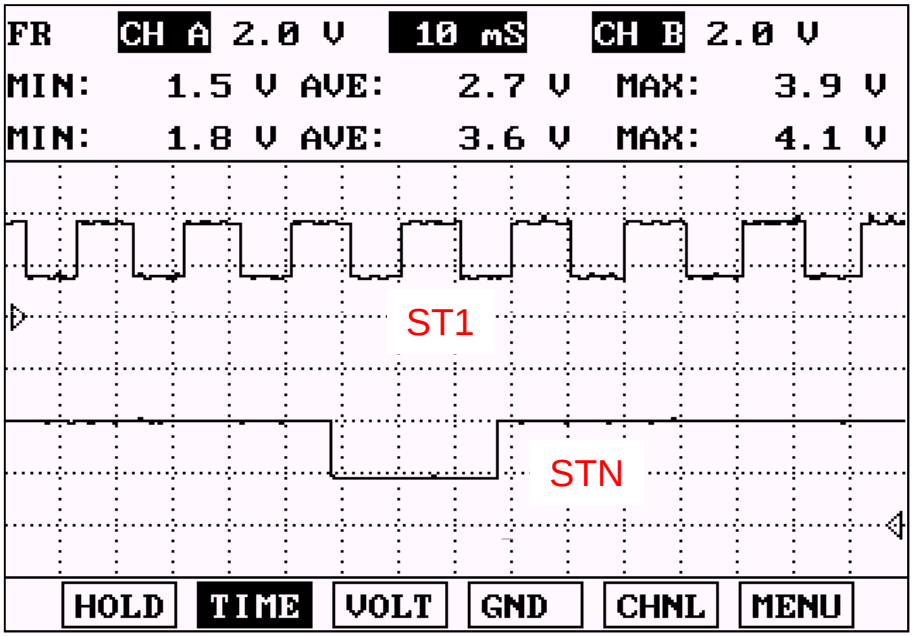

[ST1, STN]

Simpo PDF Merge and Split Unregistered Version - http://www.simpopdf.com

Diagnosis & Troubleshooting

Checking procedure before diagnosis

Before diagnosis with a scan tool, confirm the operation of warning lamps is normal.

Turn the IG key OFF → ON,

1. If ABS/EBD/ESP OFF lamps turn on for 3 seconds and turn off
   : warning lamps and ABS/ESP systems are okay]

2. If ABS/EBD/ESP OFF lamps stay off
   ① Remove the ABS/ESP Connector.
   ② IG key ON
   ③ ABS/EBD stays off → warning lamp circuit error → check the cluster & wiring
   ④ ABS/EBD stays on → warning lamp circuit normal, ABS error → diagnosis with HI-SCAN

Caution during vehicle service

1. Remove the ABS/ESP connector before ECM or TCM work.
   (if not, CAN related DTCs will be memorized on the ESPCM)

2. Before Remove the connectors, turn the ignition off.

Simpo PDF Merge and Split Unregistered Version - http://www.simpopdf.com

Simpo PDF Merge and Split Unregistered Version - http://www.simpopdf.com

Diagnosis & Troubleshooting

Motor/Valve/Fuse check

Error Code	Fault Type	Cause	Checking Procedure
C2402	Motor Short to BAT/GND Motor Open Motor Fuse Open Motor Lock	Power supply Motor fuse Defected motor	1. Check the motor power (BATT2) and fuse/wiring (10~16V) 2. Check the Chassis GND & ESPCM GND : less than 10mΩ 3. Drives over 20kph → Warning lamp ON → check 1 → Okay → Replace the HECU
C2112	Valve Relay Open/Short Fuse Open	Power supply Valve Relay Fuse Solenoid Valve	1. Check the valve relay power (BATT1) and fuse/wiring (10~16V) 2. Check the Chassis GND & ESPCM GND : less than 10mΩ
C2380	Open/Short Leakage Current		

Diagnosis & Troubleshooting

CAN check

Error Code	Fault Type	Cause	Checking Procedure
C1616	CAN Bus OFF	CAN BUS	1. Check the resistance between the CAN High and the CAN Low (Normal : 60 Ω) 2. If the resistance is abnormal check the wiring condition
C1611 C1612	Message Timeout	No ECM message No TCM Message	1. Check the ECM and TCM connectors and wiring condition 2. Check if there are CAN related DTCs from ECM & TCM 3. Read the CAN data from TCM current data with HI-SCAN
C1605	CAN H/W Fail	CAN H/W Error	1. Replace the HECU.

Simpo PDF Merge and Split Unregistered Version - http://www.simpopdf.com

Diagnosis & Troubleshooting

Pressure sensor check

Error Code	Fault Type	Cause	Checking Procedure
C1235	Sensor Open/Short	Sensor circuit	1. Replace the HECU.
C1237	Sensor Signal Error	Sensor	1. Check if the brake light switch & brake switch & wiring is normal 2. If okay, replace the HECU.

Simpo PDF Merge and Split Unregistered Version - http://www.simpopdf.com

Diagnosis & Troubleshooting

Yaw rate & Lateral G sensor

Error Code	Fault Type	Case	Checking Procedure
C1644	Sensor CAN BUS OFF	CAN BUS	1. Check the resistance between the CAN High and the CAN Low (Normal : 60 Ω) 2. If the resistance is abnormal check the wiring condition
C1643	Sensor CAN Message Timeout	Sensor CAN Message	1. Check Sensor connector & wiring 2. Check the CAN signal 3. If the CAN signal is okay but problems occurs replace the sensor
C1283	Abnormal Signal	Offset, Noise Stick	1. Check Sensor connector & wiring 2. Check if sensor installation is okay. 3. Remove the sensor mounting bolts and IG on. Move the sensor and read the current data of HI-SCAN. 4. If problem occurs, replace the sensor
C1647	Sensor CAN H/W Fail	Sensor CAN H/W	Replace the sensor
C1282	CBIT Fail	Sensor Self Test Error	Replace the sensor

Simpo PDF Merge and Split Unregistered Version - http://www.simpopdf.com

Body Electrical

Warning lamp control

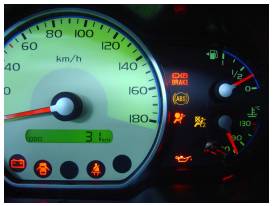

Ignition key reminder

Power window control

Tail lamp auto cut

Keyless entry & Anti-theft control

Copyright by Hyundai Motor Company. All rights reserved.

Simpo PDF Merge and Split Unregistered Version - http://www.simpopdf.com

ETACS Function

		General	Middle East	China	Europe	
					SBR	NON-SBR
Seat belt warning timer	Buzzer	X	O	X	X	X
	Indicator	O	O	O	X	O
Seat belt reminder		X	X	X	O	X
Crash door unlock		O	O	O	O	O
Key operating warning		X	O	X	X	X
Tail lamp auto cut		O	O	O	O	O
Ignition key reminder		O	O	O	O	O
Central door lock/unlock		O	O	O	O	O
Door lock / unlock by Tx		O	O	O	O	O
Power window timer		O	O	O	O	O
Anti-theft (Burglar alarm)		O	O	O	O	O

* O : Apply X : Not apply

This information can be changed without prior notice.

Simpo PDF Merge and Split Unregistered Version - http://www.simpopdf.com

ETACS Location

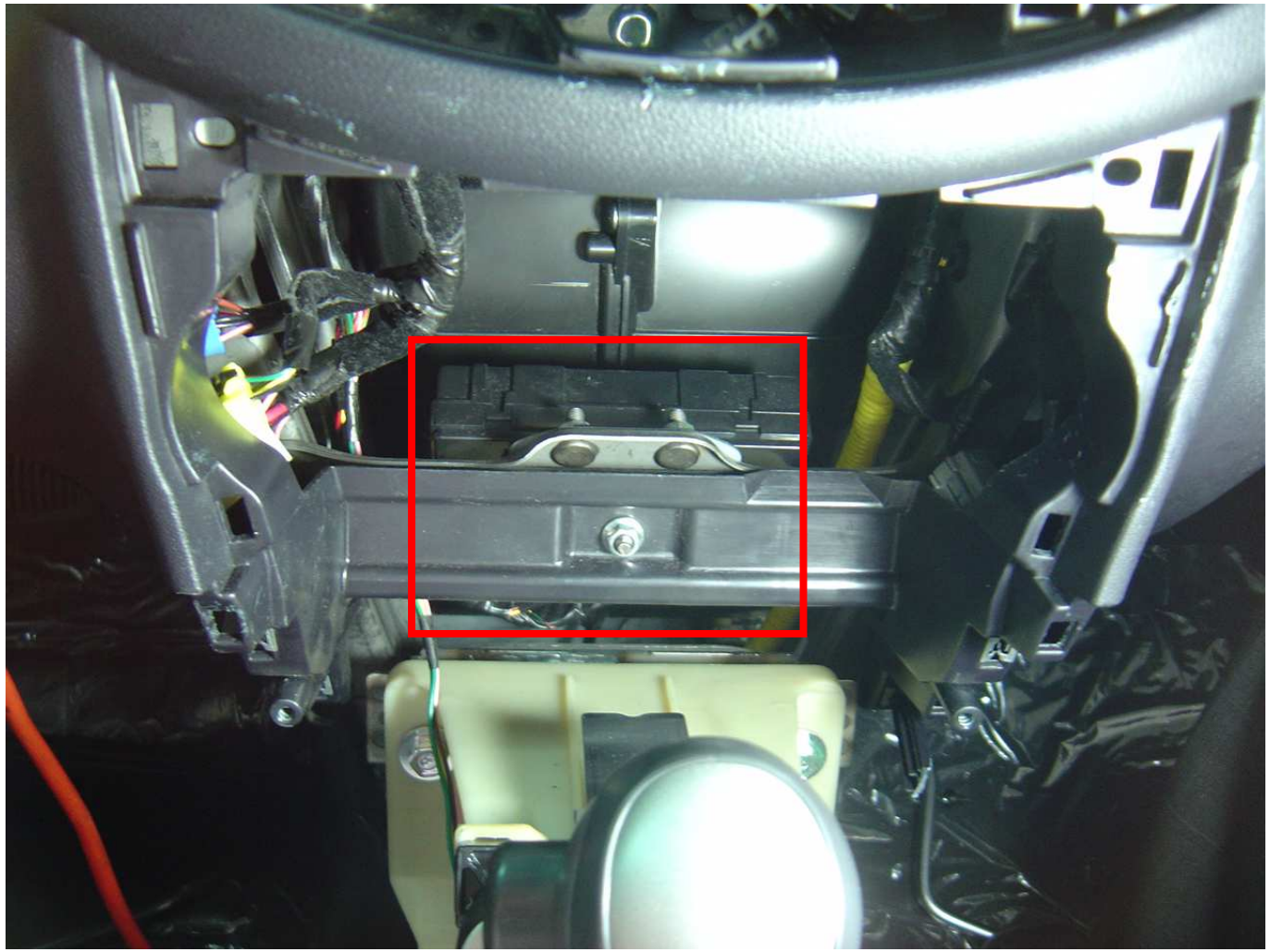

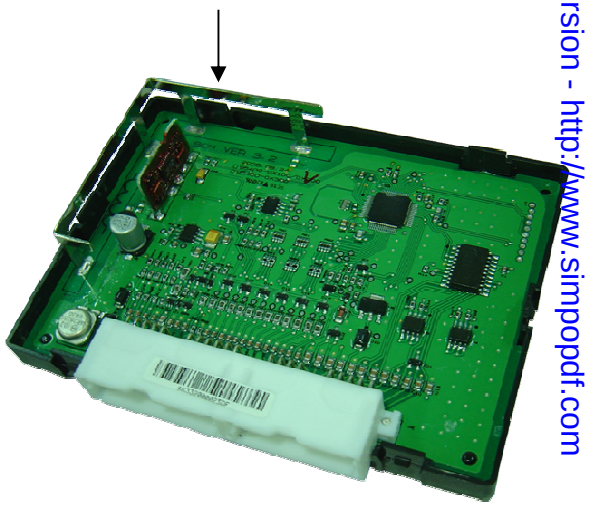

Simpo PDF Merge and Split Unregistered Version - http://www.simpopdf.com

Seatbelt Warning

- **Driver seat belt warning lamp and warning sound condition**

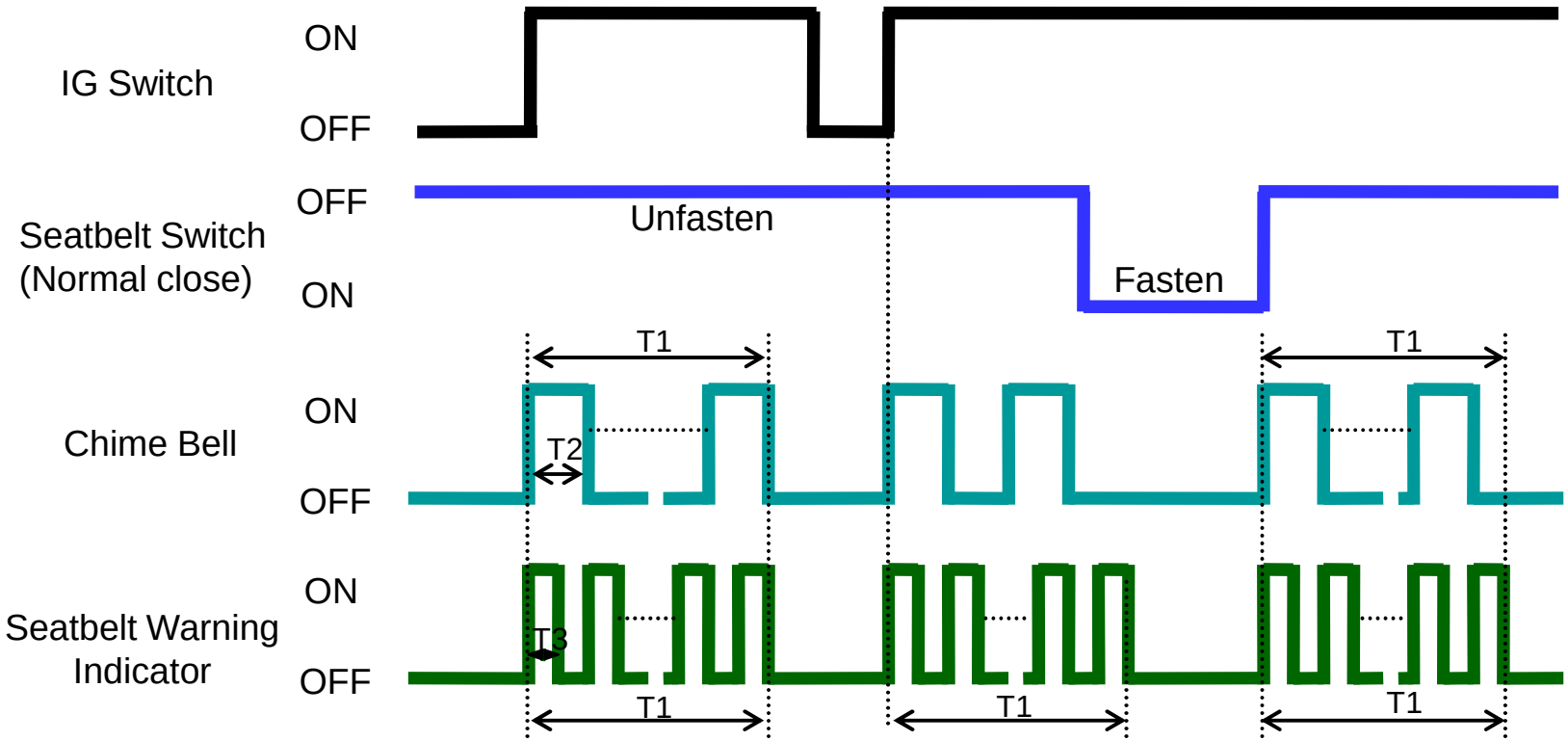

T1 : 6±1s T2 : 0.45±0.1 s T3 : 0.3±0.1s

Simpo PDF Merge and Split Unregistered Version - http://www.simpopdf.com

Crash Door Unlock

- If the airbag deployed signal is inputted to the ETACS when the door is locked, the unlock signal is executed immediately for safety.

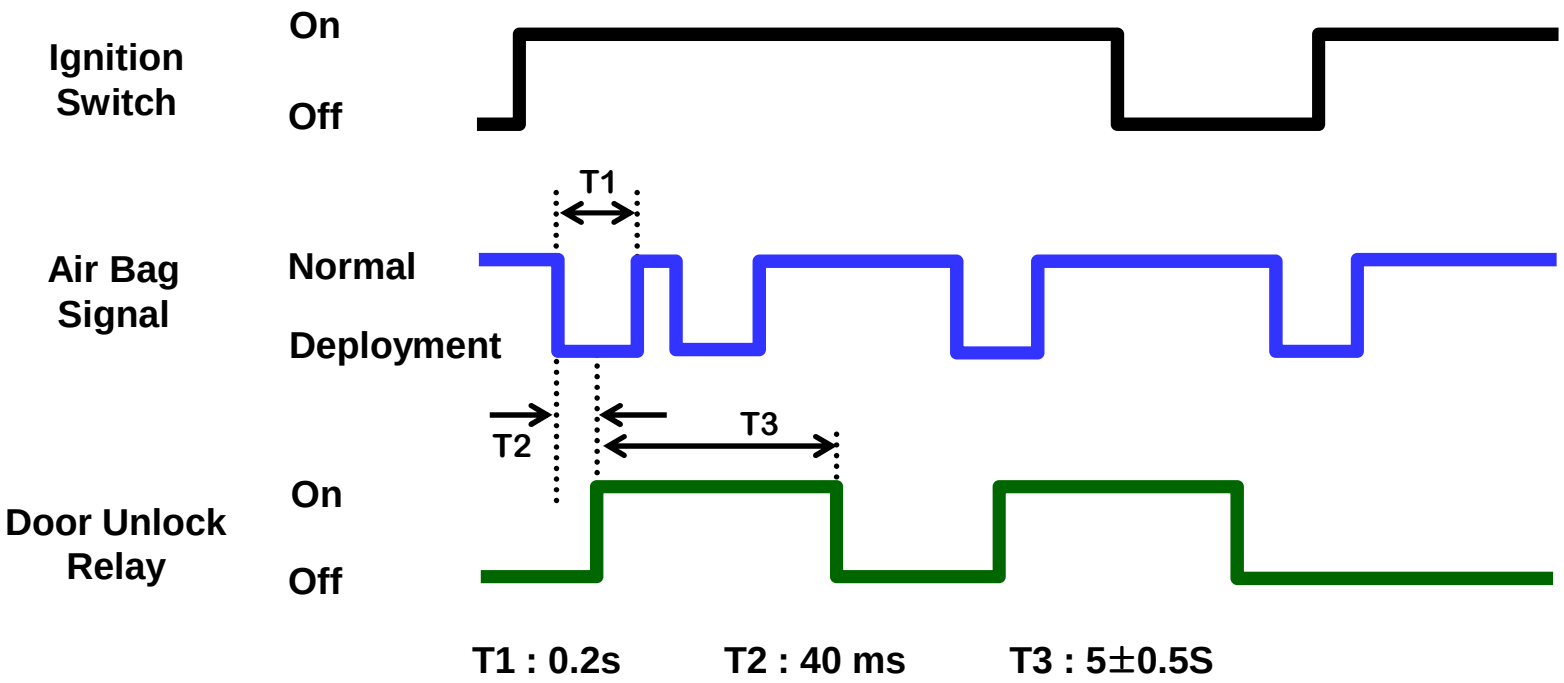

Simpo PDF Merge and Split Unregistered Version - http://www.simpopdf.com

Key Operated Warning

- Chime bell output continuous, when driver door is opened if IG key is in the key cylinder.

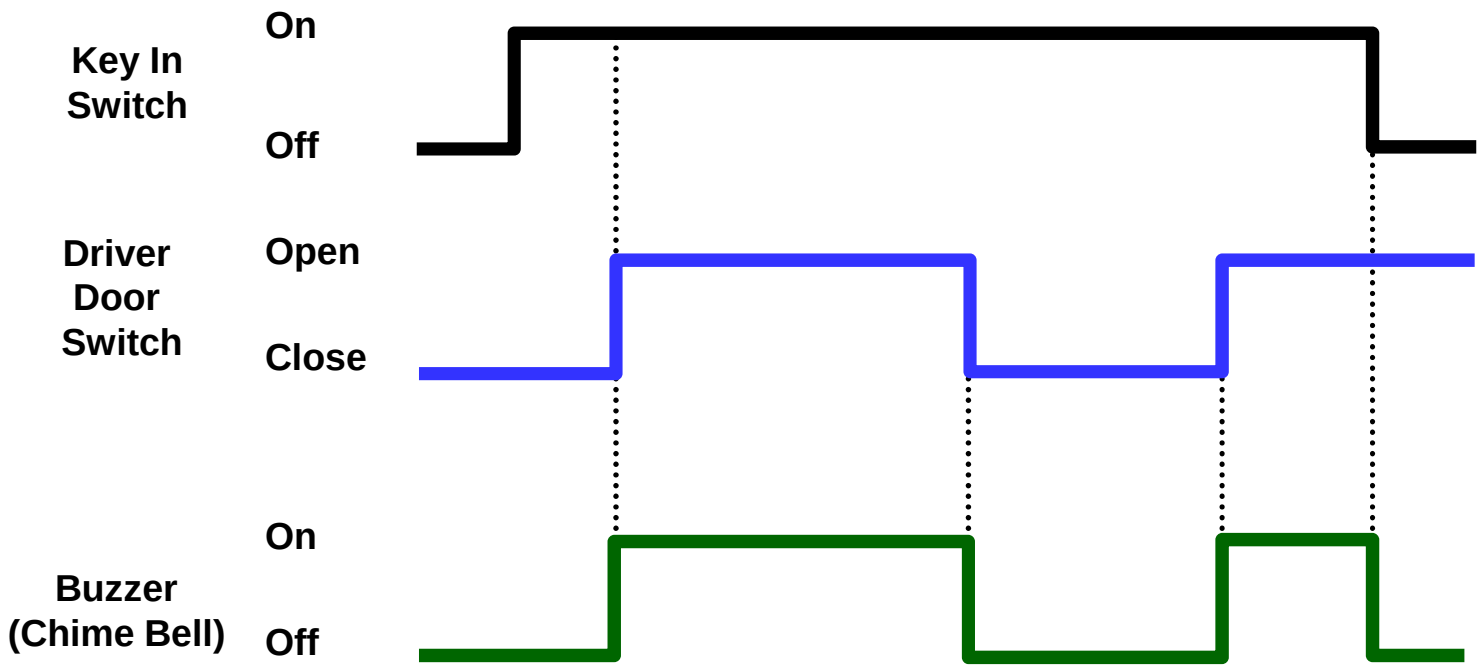

Simpo PDF Merge and Split Unregistered Version - http://www.simpopdf.com

Tail Lamp Auto Cut

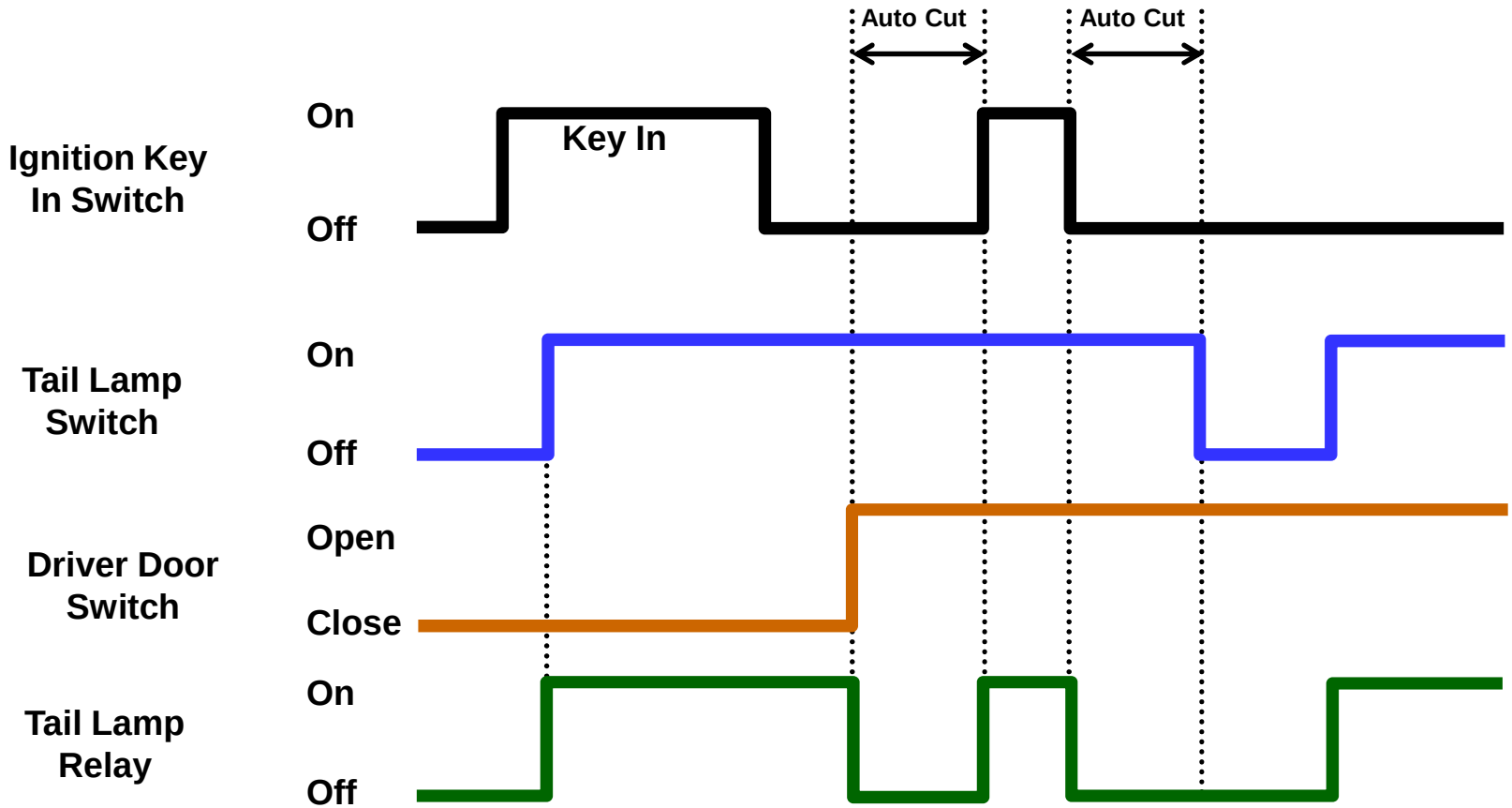

Simpo PDF Merge and Split Unregistered Version - http://www.simpopdf.com

Ignition Key Reminder

- This function is to prevent vehicle from door lock if IG. key is inserted into key cylinder.

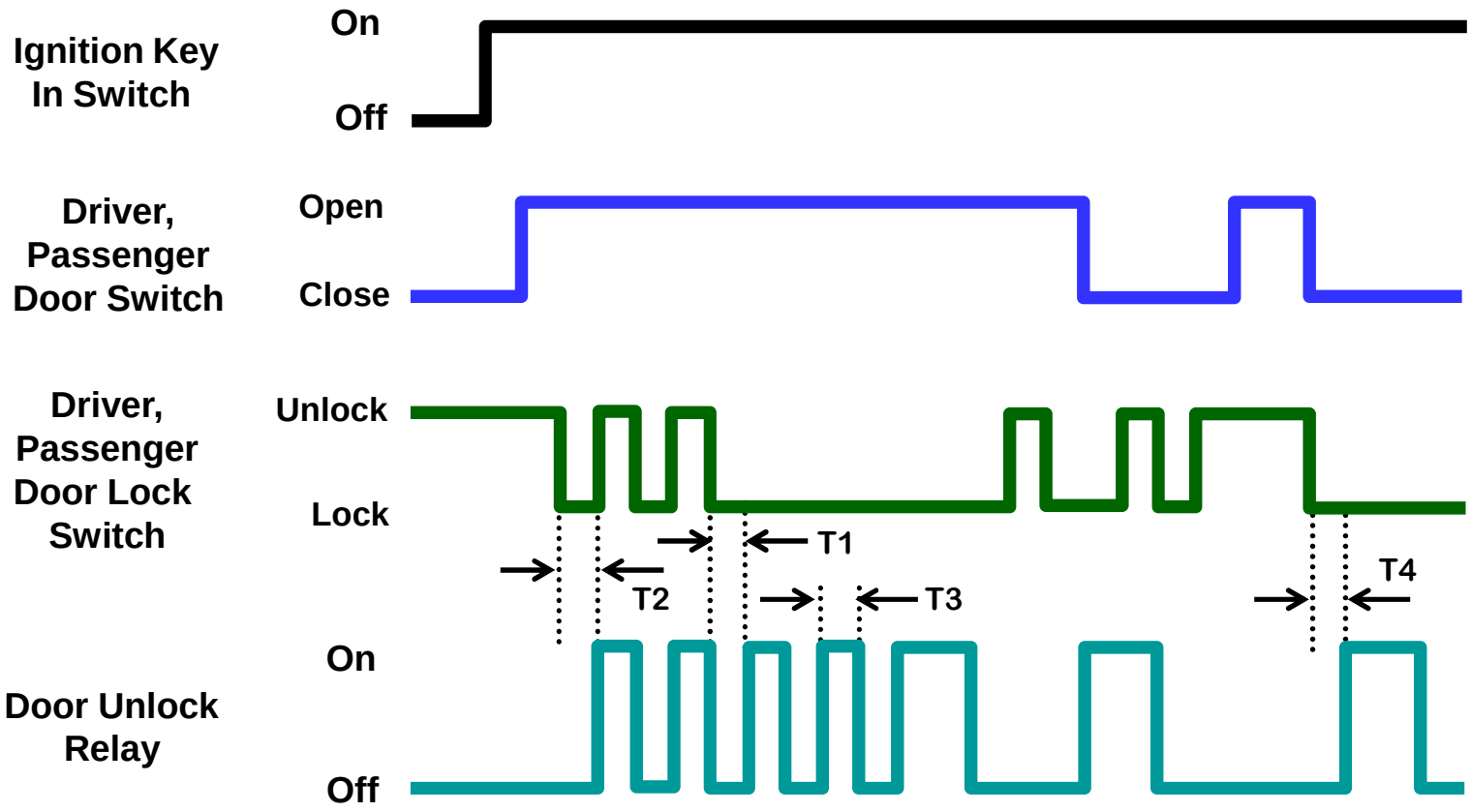

T1 : 0.5S
T3 : 0.5±0.1s

T2 : 1±0.2s
T4 : 0.5±0.1s

Simpo PDF Merge and Split Unregistered Version - http://www.simpopdf.com

Keyless Entry & Central Door Lock/Unlock

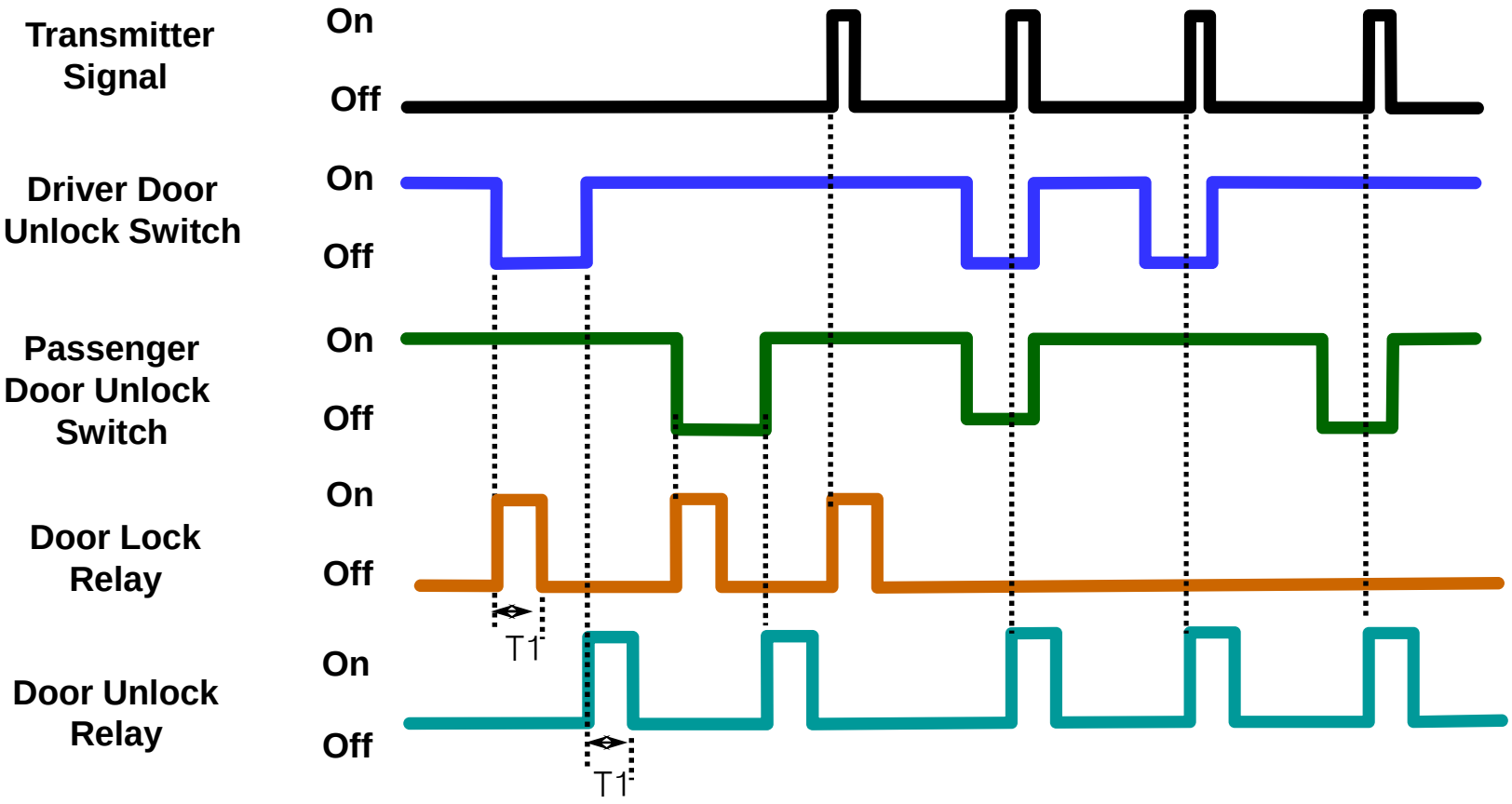

T1 : 0.5±0.1s

Simpo PDF Merge and Split Unregistered Version - http://www.simpopdf.com

Power Window Timer

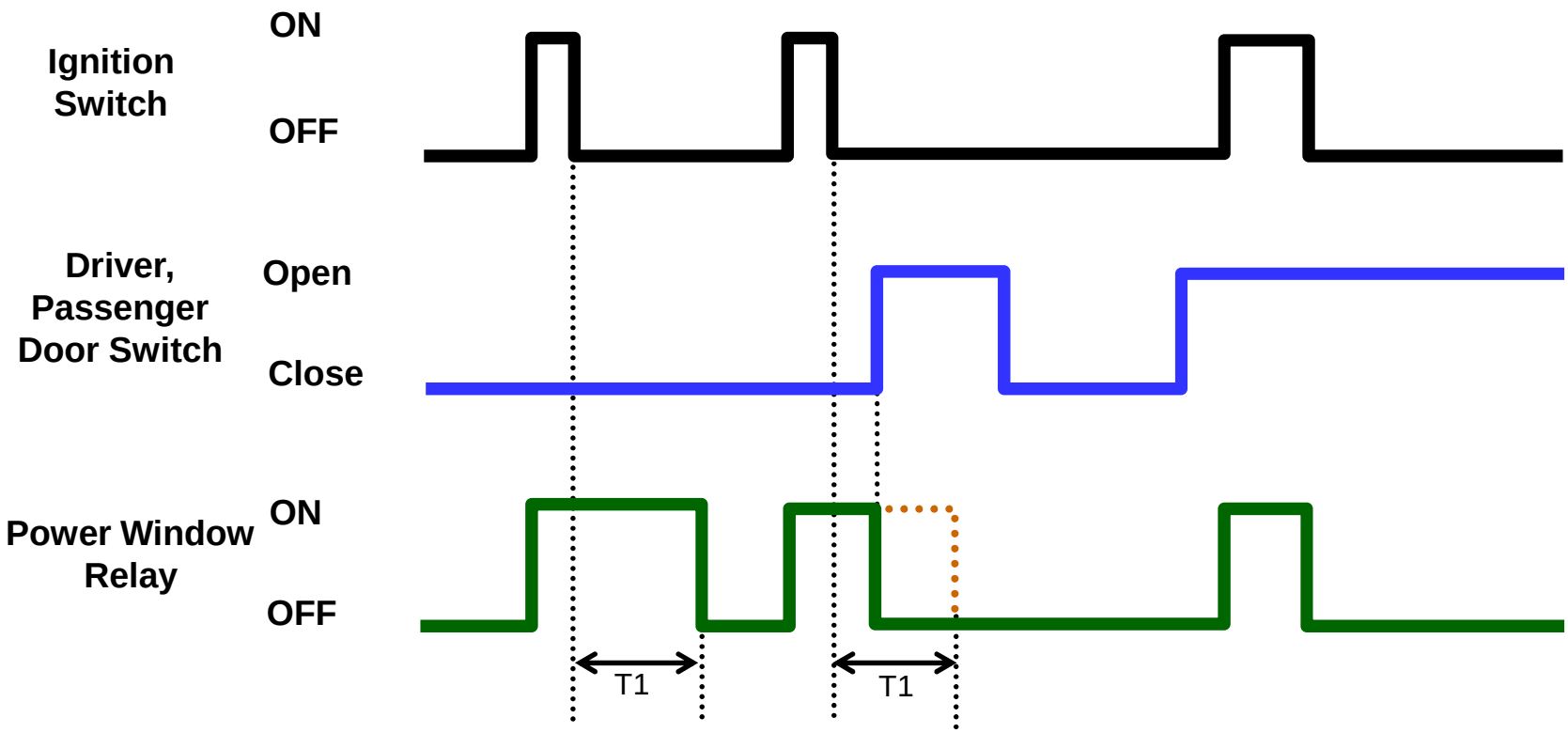

T1 : 30±3S

Simpo PDF Merge and Split Unregistered Version - http://www.simpopdf.com

Burglar Alarm System – Arm Mode

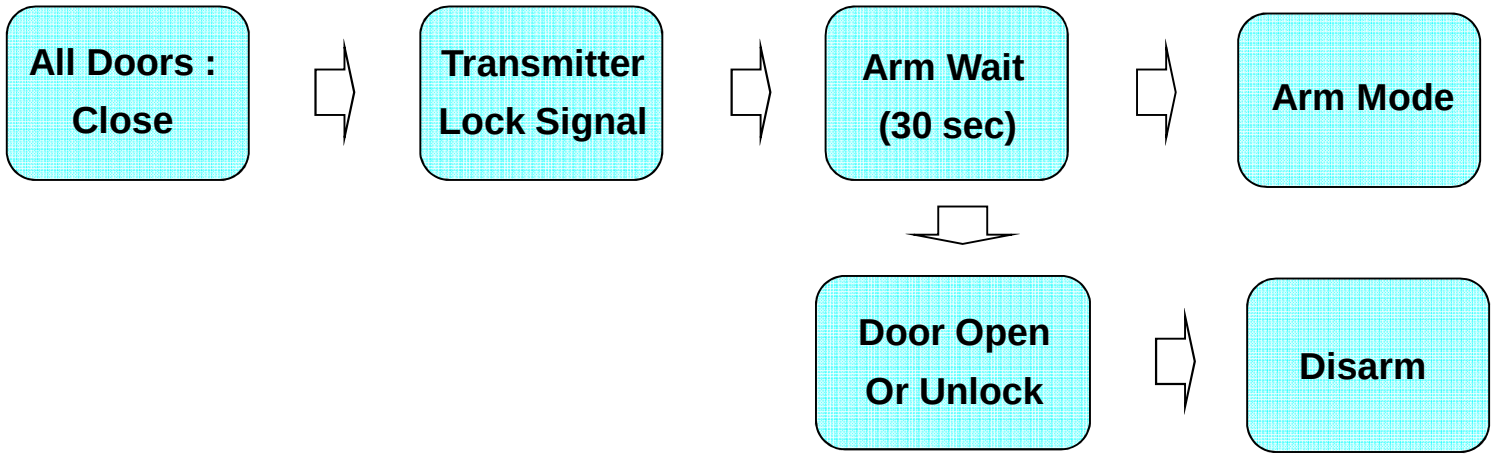

Simpo PDF Merge and Split Unregistered Version - http://www.simpopdf.com

Burglar Alarm System – Auto Lock Timer 1

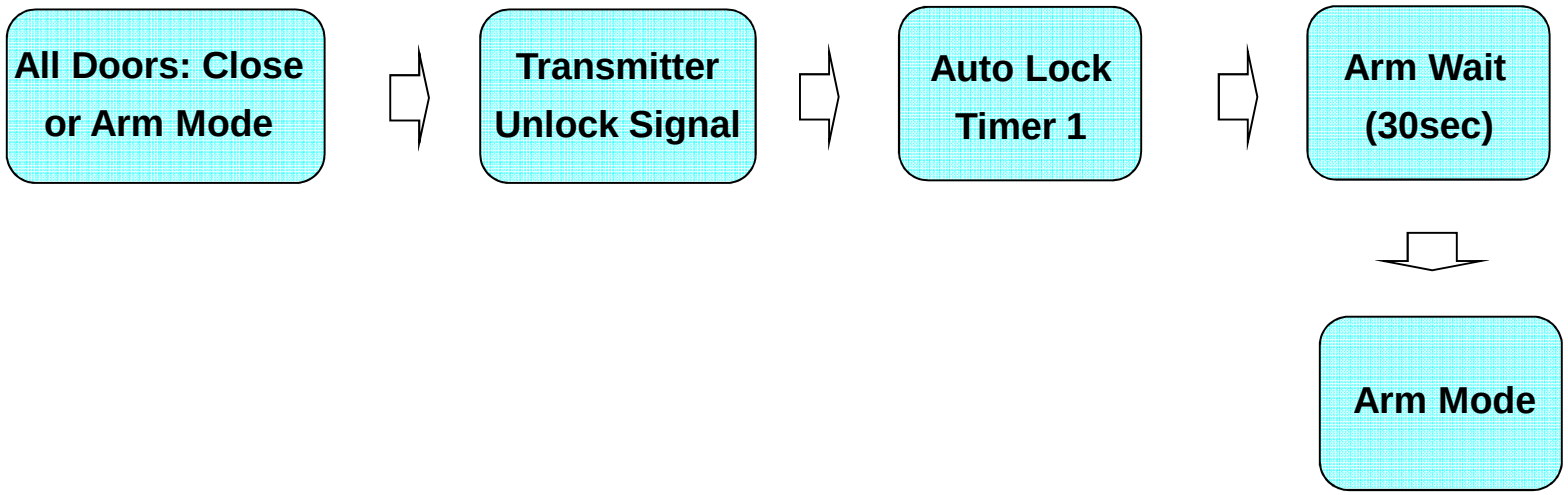

Simpo PDF Merge and Split Unregistered Version - http://www.simpopdf.com

Burglar Alarm System – Auto Lock Timer 2

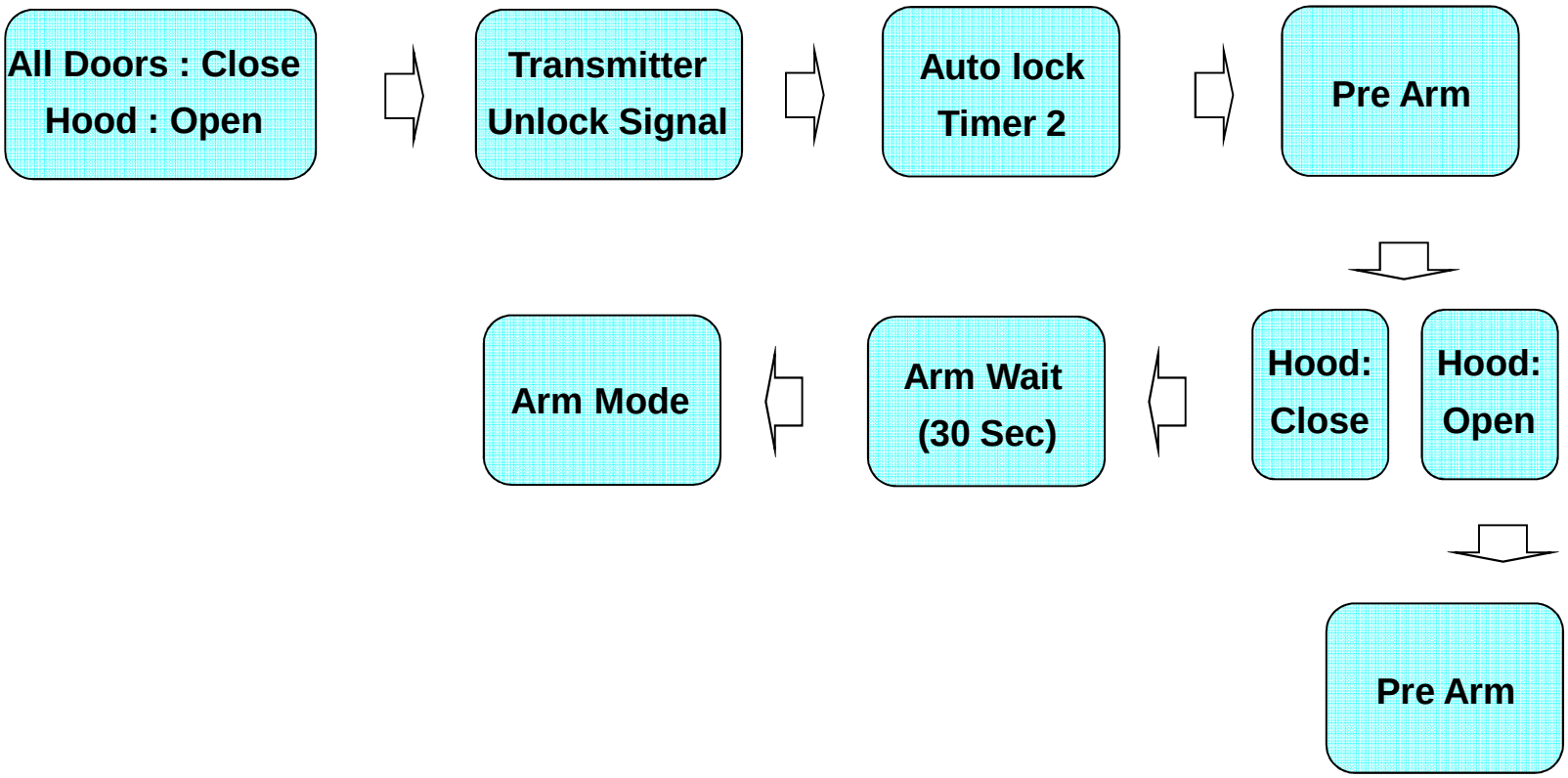

Simpo PDF Merge and Split Unregistered Version - http://www.simpopdf.com

ICM (Integrated Circuit Module)

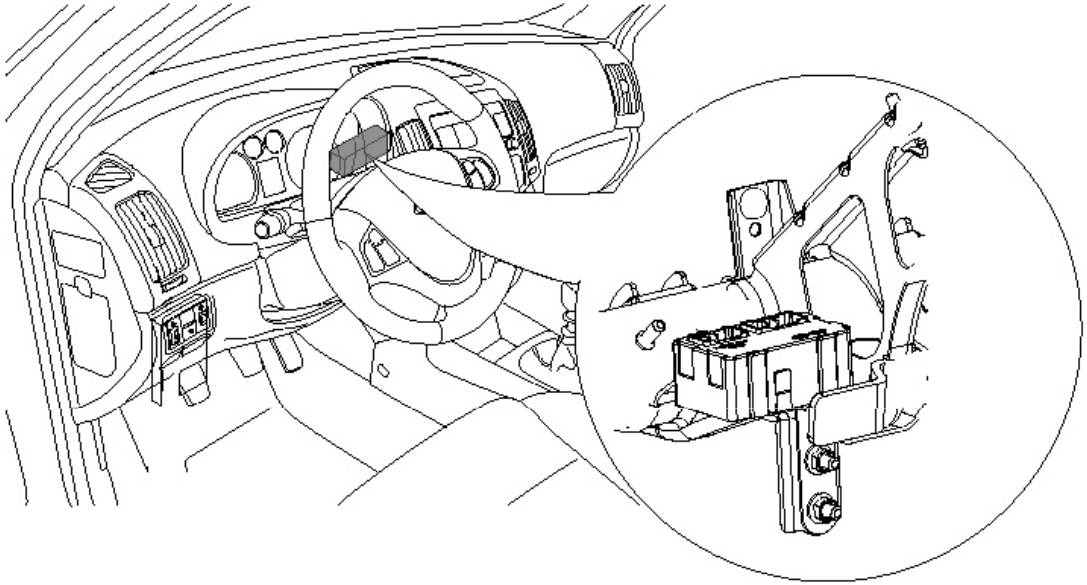

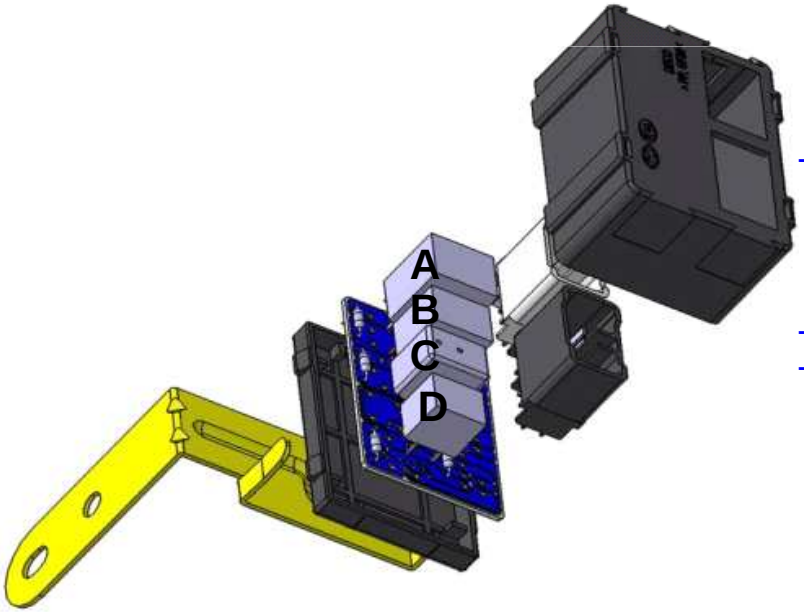

A : Door Lock / Unlock Relay (Twin)

B : Burglar Alarm Relay (Start Inhibit)

C : Burglar Alarm Horn Relay

D : Hazard Lamp Relay

Simpo PDF Merge and Split Unregistered Version - http://www.simpopdf.com

MDPS

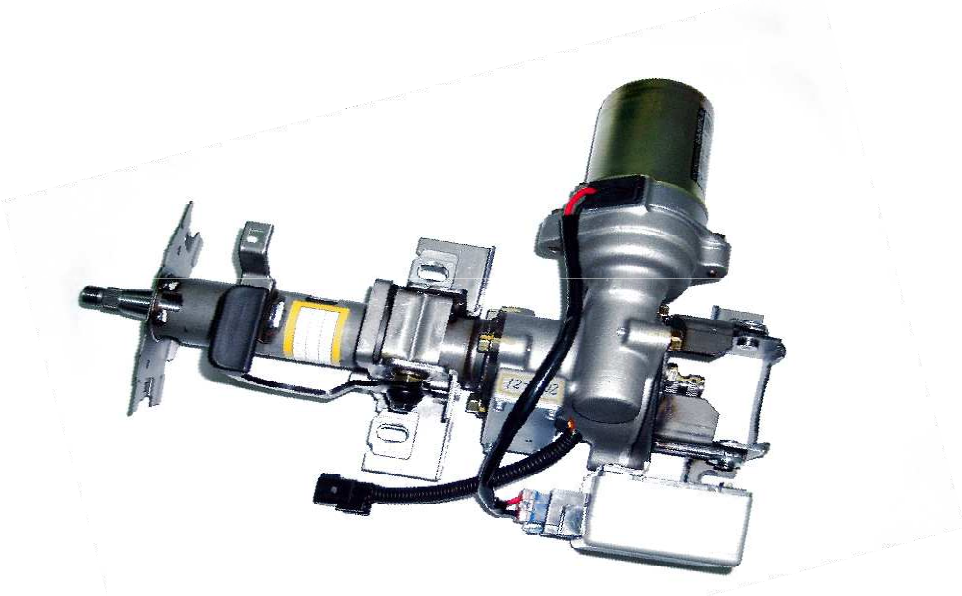

Copyright by Hyundai Motor Company. All rights reserved.

Simpo PDF Merge and Split Unregistered Version - http://www.simpopdf.com

System Structure

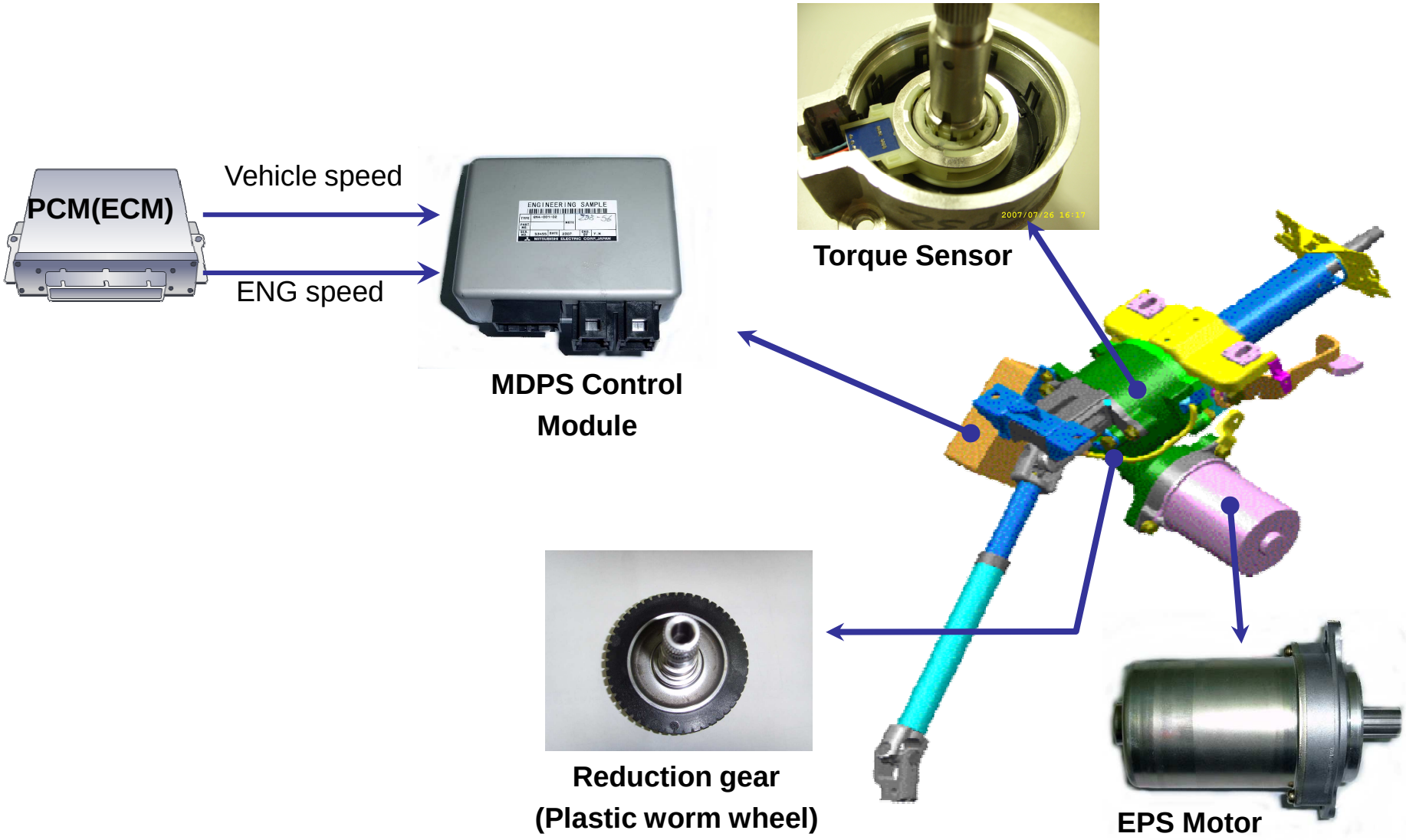

Simpo PDF Merge and Split Unregistered Version - http://www.simpopdf.com

Torque Sensor

MC

Contact type
[Potentiometer]

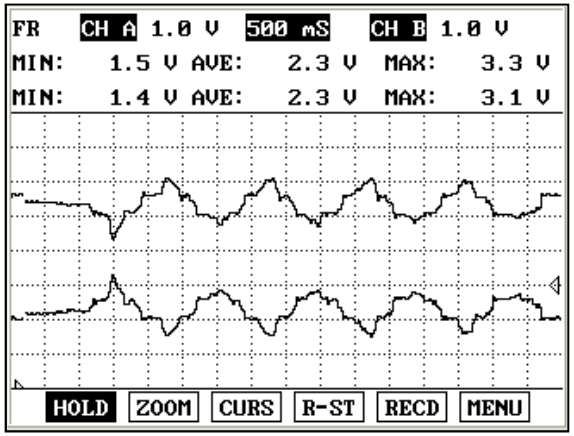

Voltage cross type ⇨ **Main, Sub signals have opposite phase each other**

PA

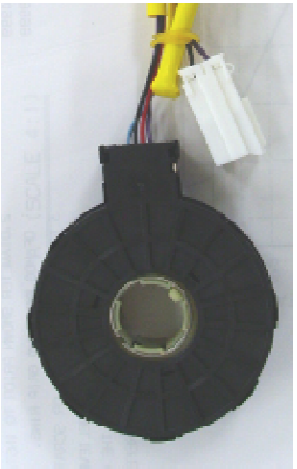

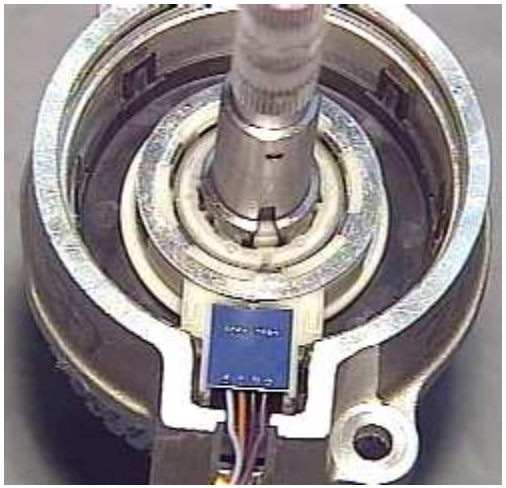

Non-Contact type
[Linear Hall]

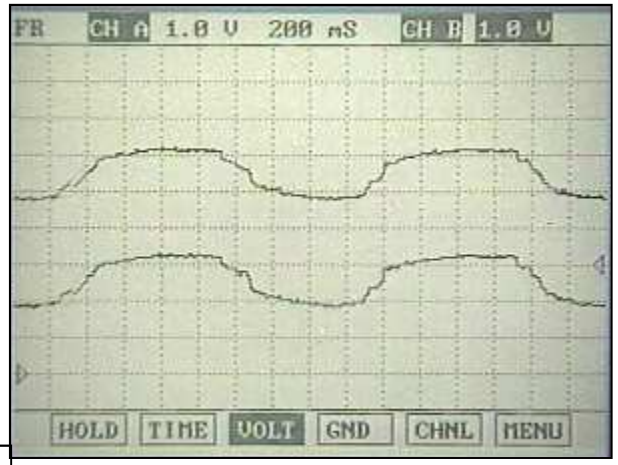

Voltage straight type ⇨ **Main, Sub signals have same phase each other**

Simpo PDF Merge and Split Unregistered Version - http://www.simpopdf.com

Torque Sensor

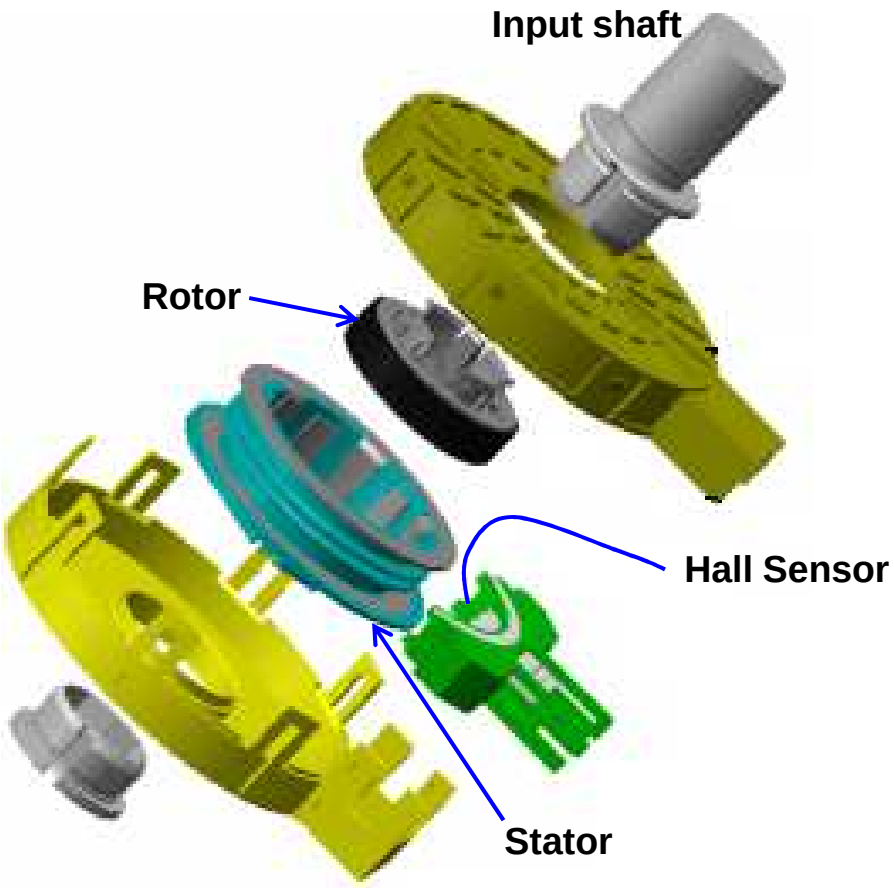

[Internal Structure]

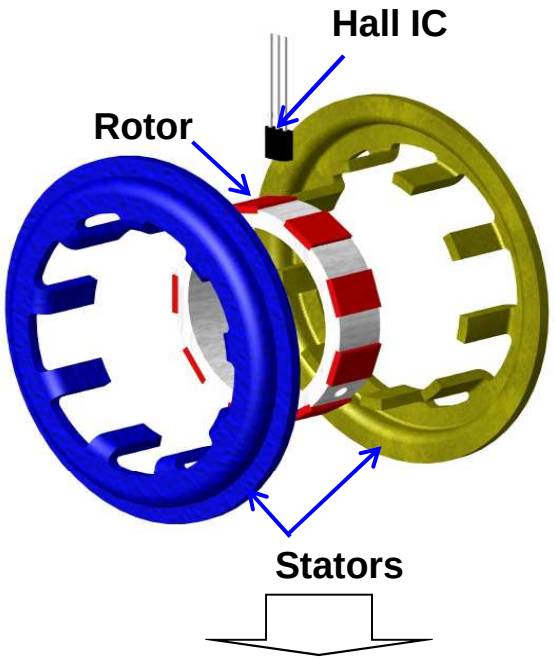

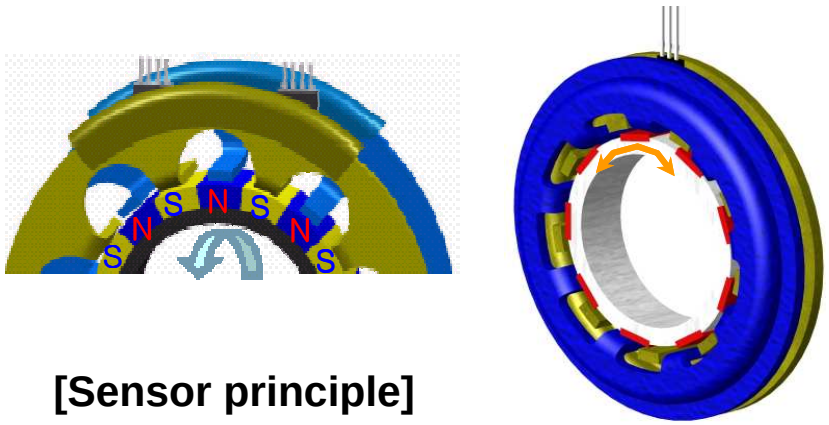

[Sensor principle]

Simpo PDF Merge and Split Unregistered Version - http://www.simpopdf.com

Engine Speed & Vehicle Speed Signal

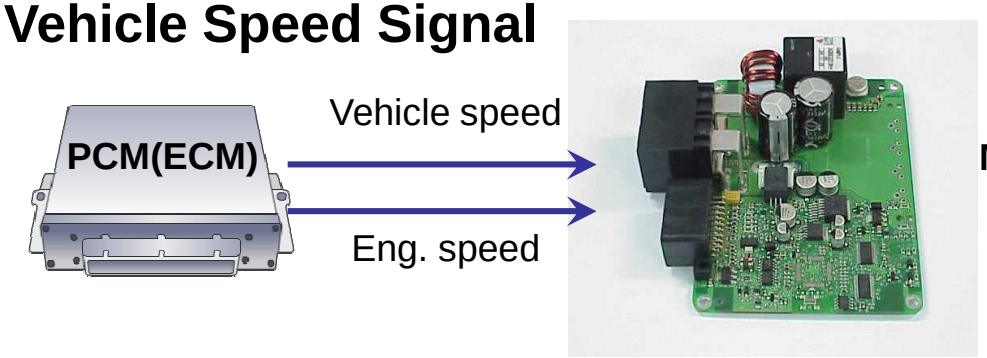

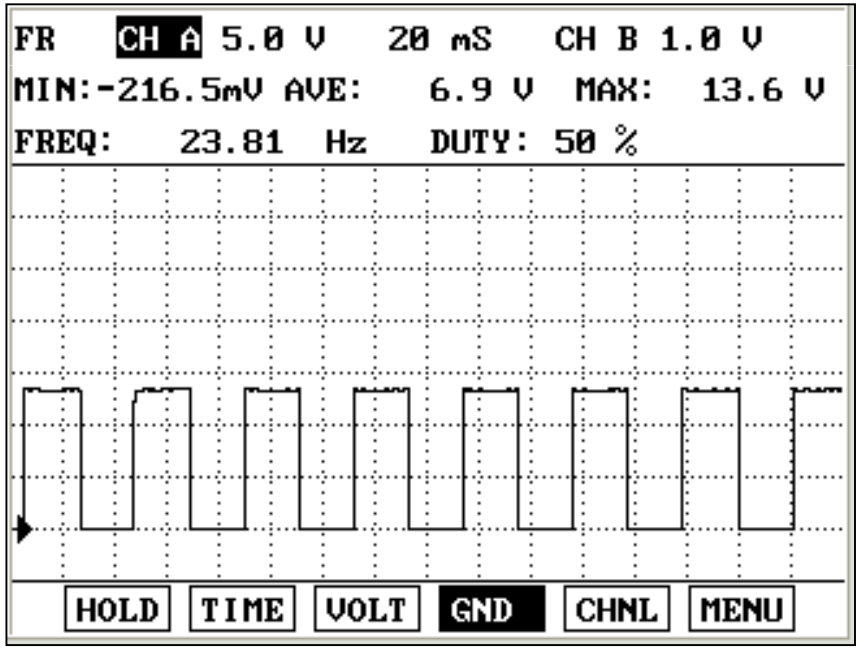

Engine speed from PCM(ECM)

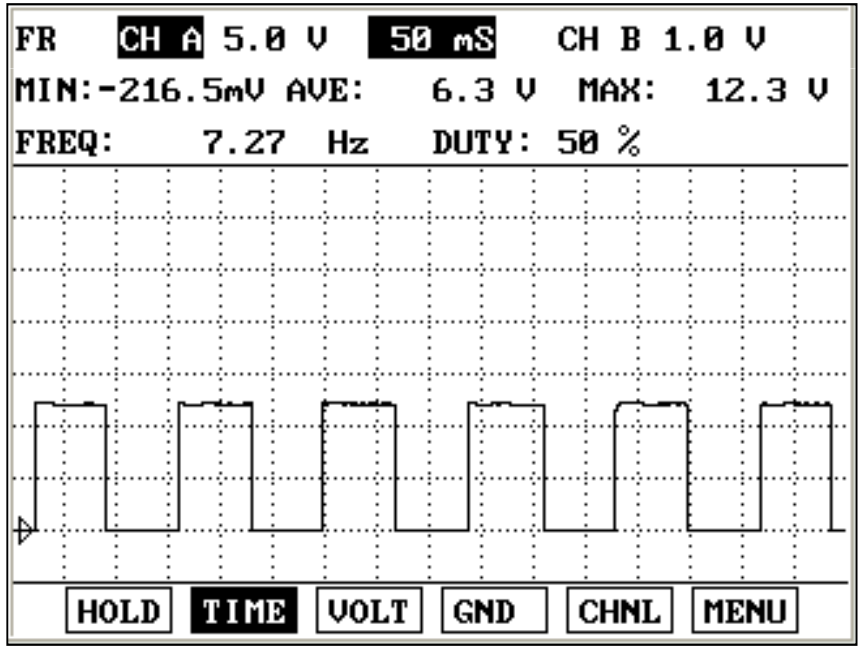

Vehicle speed from PCM(ECM)

Simpo PDF Merge and Split Unregistered Version - http://www.simpopdf.com

Power Supply & Warning Lamp

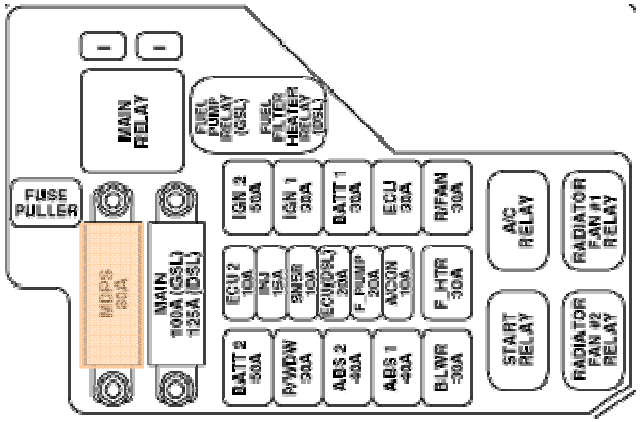

Engine room junction box ('MDPS 80A')

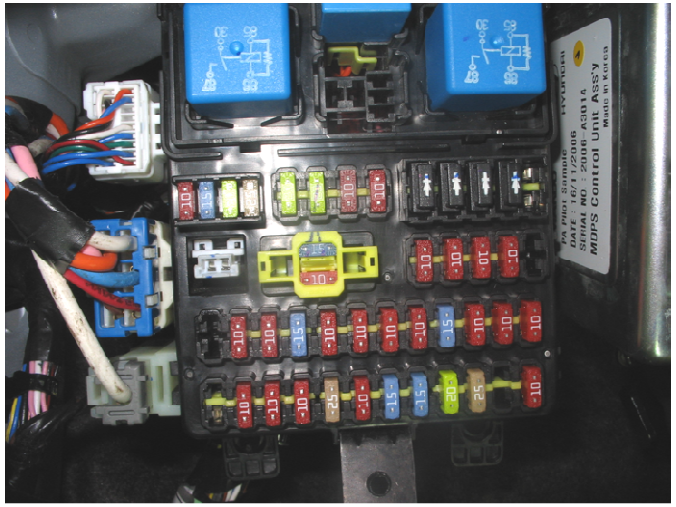

I/P junction box ('Cluster 10A')

MDPS Warning Lamp

- **IG ON, Engine Stop: Keep ON**
- **Engine Starting : Turns off 2sec later after engine starting in normal condition.**

Simpo PDF Merge and Split Unregistered Version - http://www.simpopdf.com

Motor

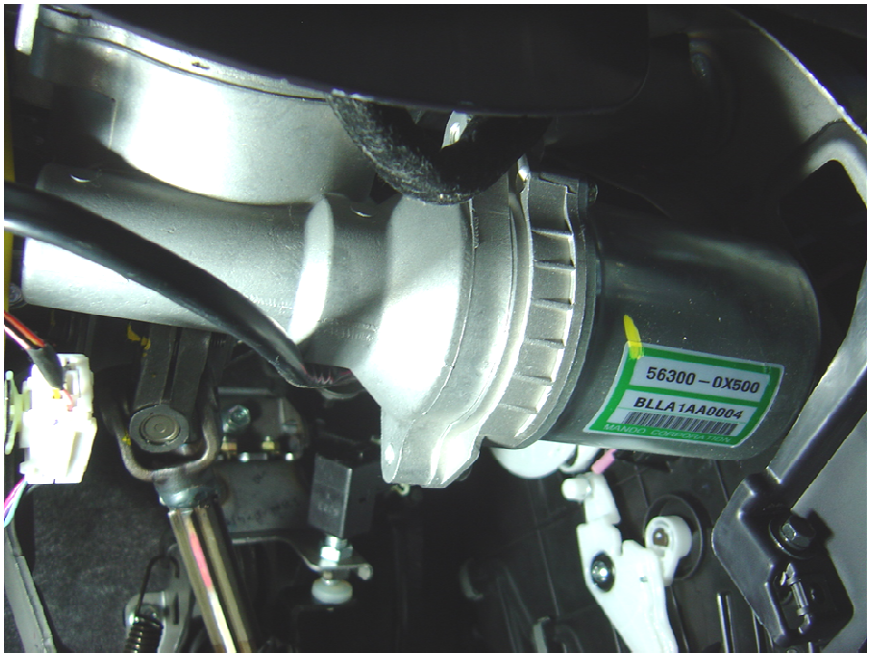

- Brush-less type DC motor (vs. brush type)
  - Small size and light weight
  - Higher rotating speed
  - More complicated control is required (higher cost)

- Max. Current: 65A

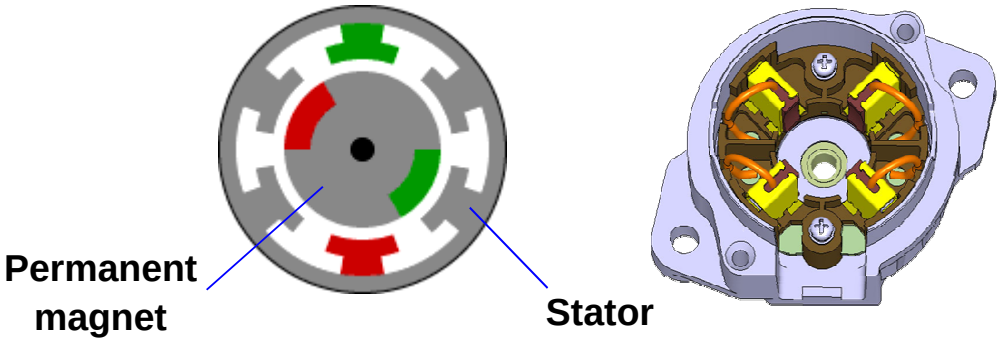

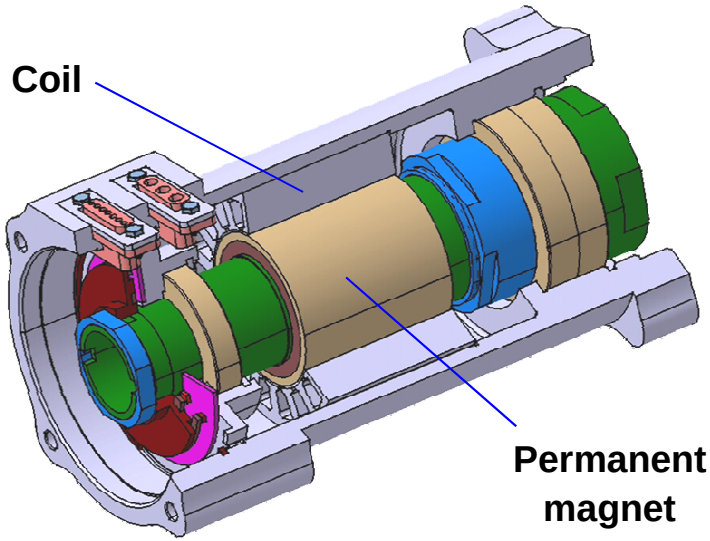

Simpo PDF Merge and Split Unregistered Version - http://www.simpopdf.com

MDPS Control Module

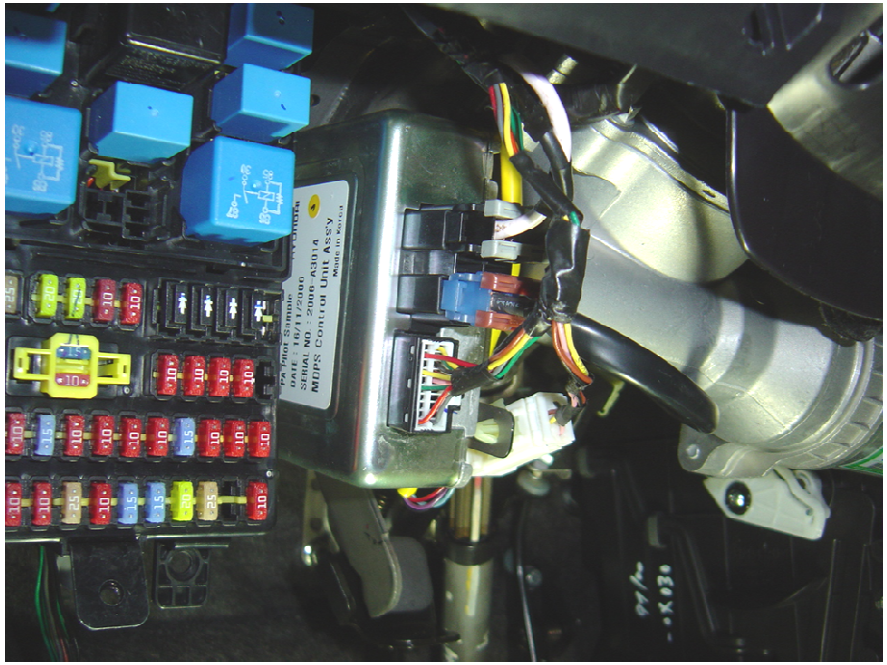

- System Supplier: MANDO
- Thermister to detect the temperature is embedded in control module.

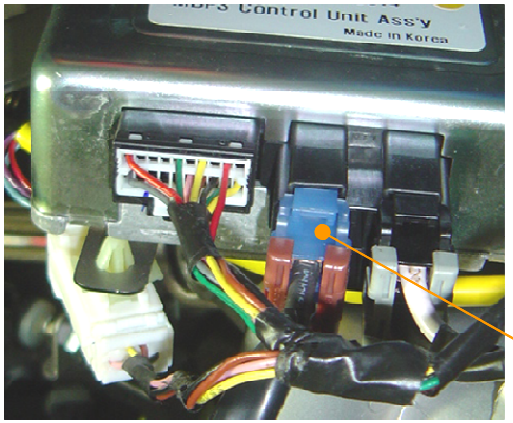

Motor connector

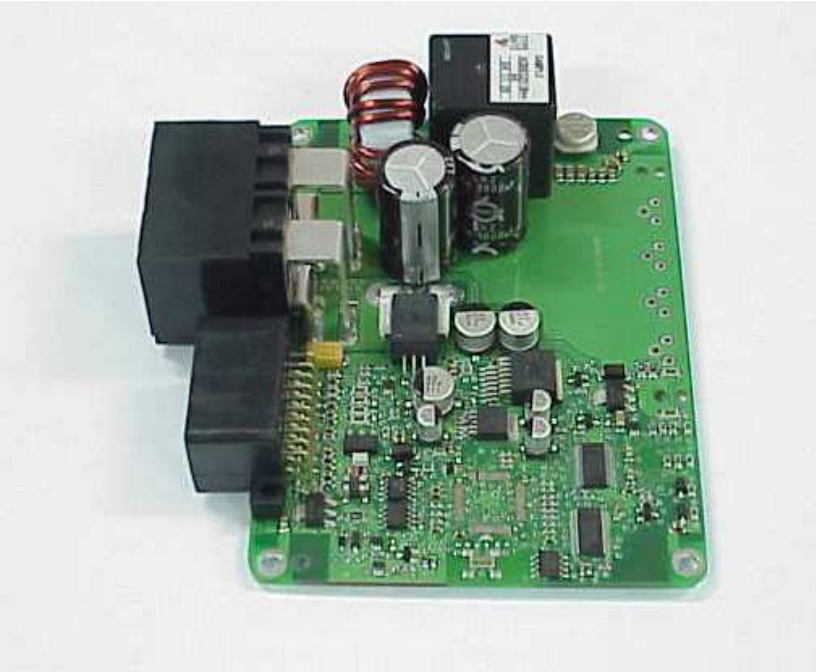

Simpo PDF Merge and Split Unregistered Version - http://www.simpopdf.com

Communication

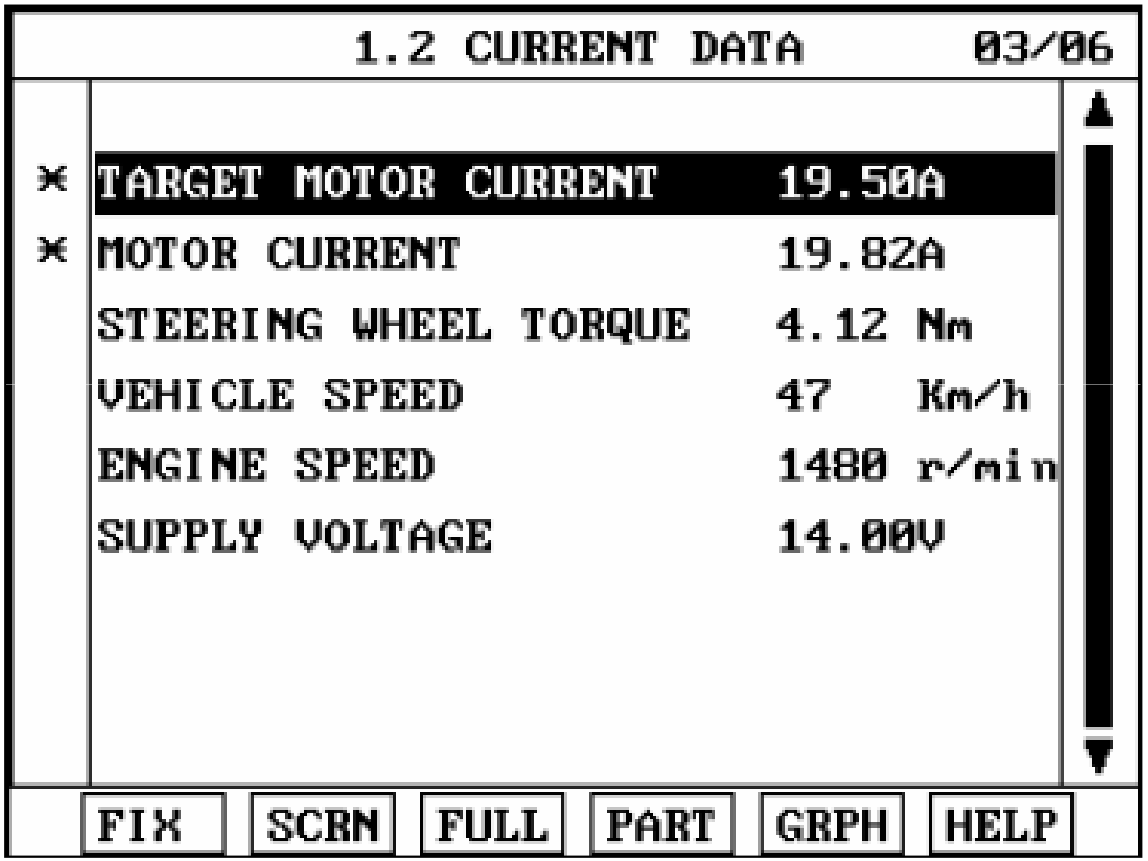

Simpo PDF Merge and Split Unregistered Version - http://www.simpopdf.com

PA SRS (SIEMENS)

Simpo PDF Merge and Split Unregistered Version - http://www.simpopdf.com

Copyright by Hyundai Motor Company. All rights reserved.

Introduction

De-powered Airbag System (General/EUR)

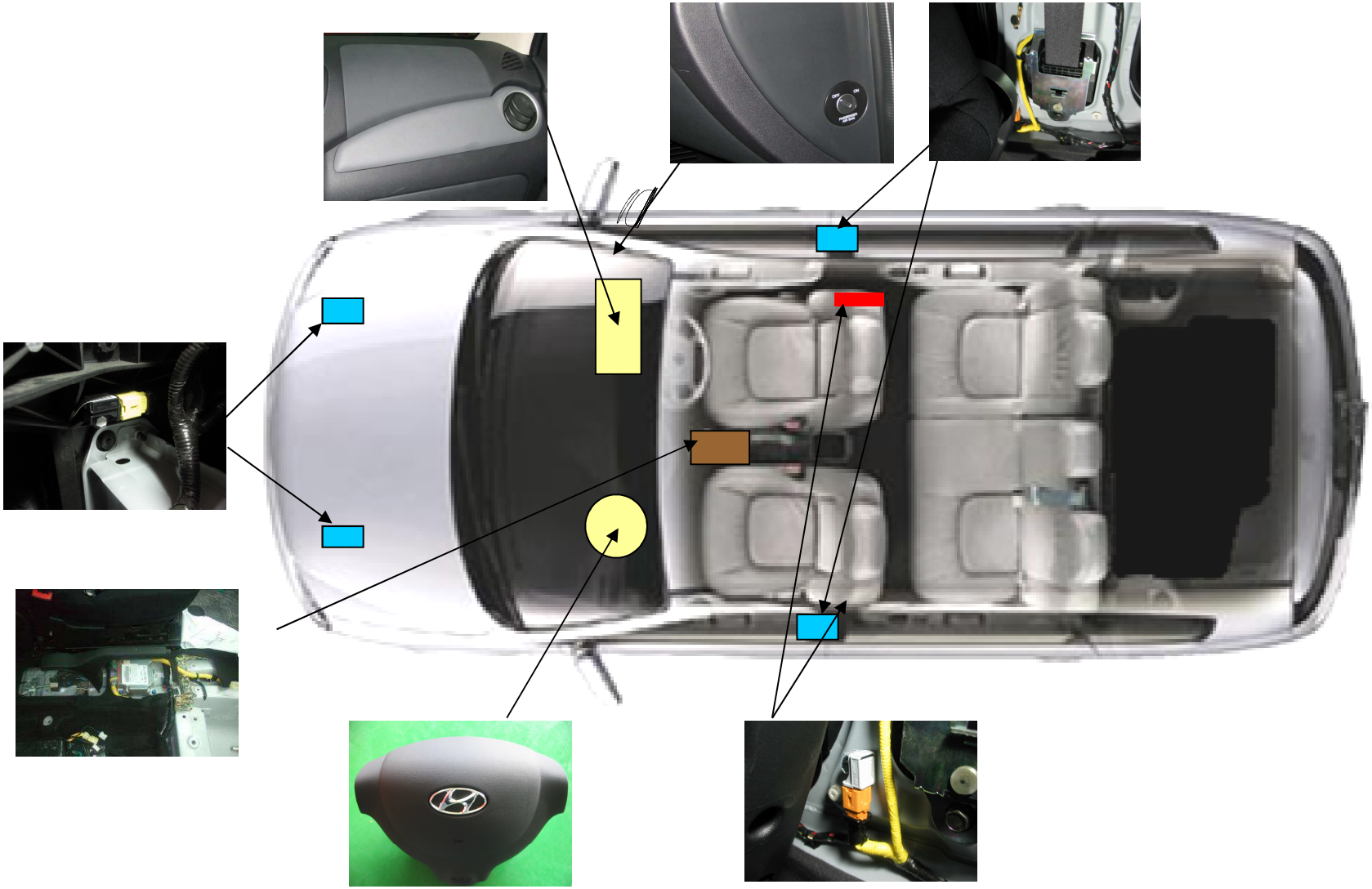

Simpo PDF Merge and Split Unregistered Version - http://www.simpopdf.com

Introduction

Application

Option		GEN	M/East	Europe	REMARK
DRIVER	Depowered	O	O	S	
PASSENGER	Depowered	O	O	O	
Side Airbag (FR)		-	-	O	
PAB ON/OFF Switch		-	-	O	

O : Option S : Standard

Simpo PDF Merge and Split Unregistered Version - http://www.simpopdf.com

PA Airbag System

Inputs and outputs

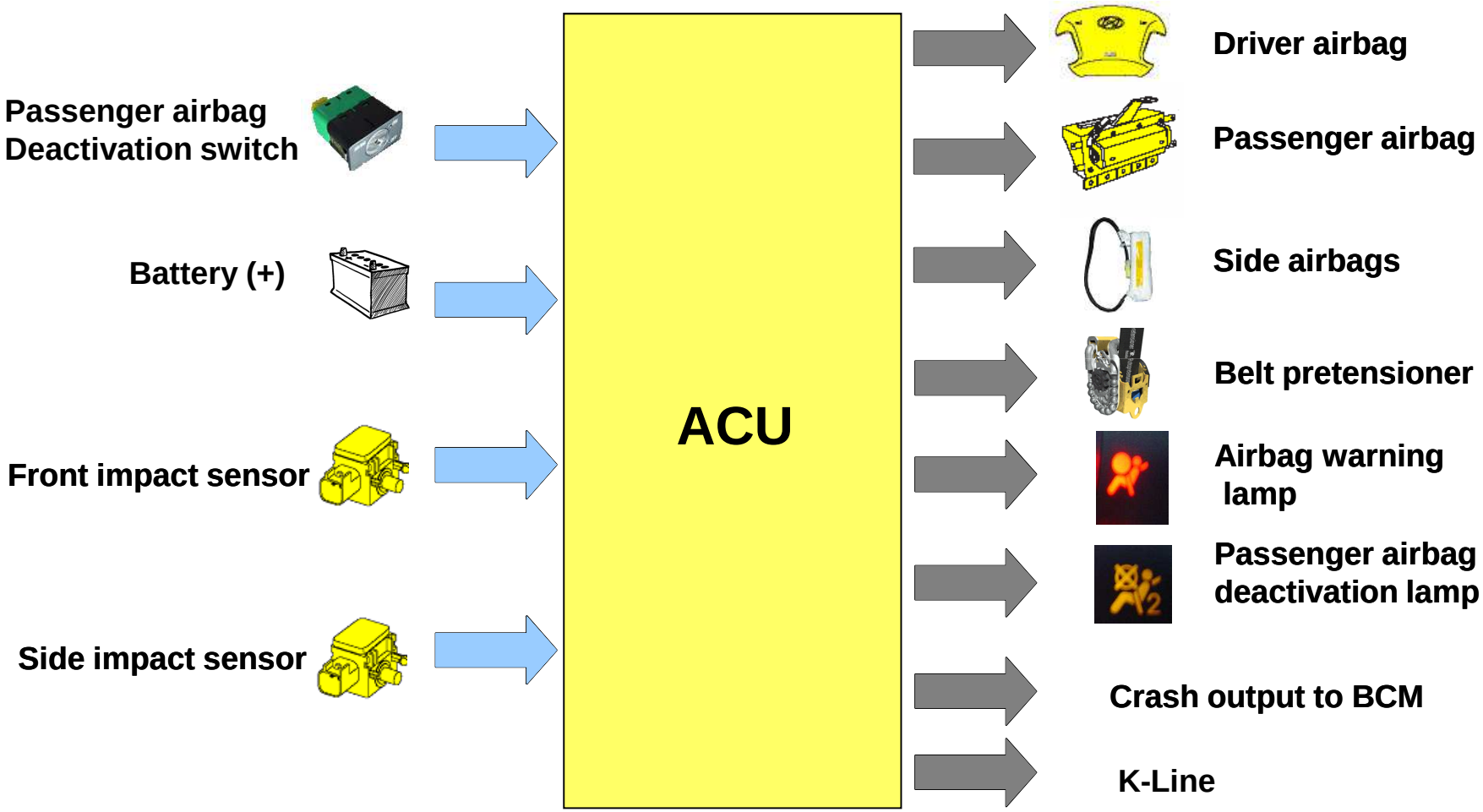

Simpo PDF Merge and Split Unregistered Version - http://www.simpopdf.com

Airbag Thresholds

Driver Front Airbag

Driver Airbag		Unbuckled/Buckled	
		PT	Airbag
Crash Severity	No Fire Crash	No Fire	No Fire
	Must Fire Crash	Fire	Fire

Passenger Front Airbag

Passenger Airbag	Unbuckled/Buckled			
	PAB On-Off Switch On (Enabled)		PAB On-Off Switch Off (Disabled)	
	PT	Airbag	PT	Airbag
No Fire Crash	No Fire	No Fire	No Fire	No Fire
Must Fire Crash	Fire	Fire	Fire	No Fire

Simpo PDF Merge and Split Unregistered Version - http://www.simpopdf.com

Airbag Thresholds

Driver Side Airbag (DSAB)

Driver Seat		Thorax and side airbag	
		PT	Side airbag
Crash Severity	No Fire side crash	No Fire	No Fire
	Must Fire side crash	No Fire	Fire

Passenger Side Airbag (PSAB)

Passenger Seat		PAB On-Off Switch On (Enabled)		PAB On-Off Switch Off (Disabled)	
Thorax and head side airbag		PT	Side airbag	PT	Side airbag
Crash Severity	No Fire side crash	No Fire	No Fire	No Fire	No Fire
	Must Fire side crash	No Fire	Fire	No Fire	Fire

Simpo PDF Merge and Split Unregistered Version - http://www.simpopdf.com

PA Airbag System

ACU (Airbag Control Unit)

The primary functions

① Crash Detection

② Activation of the front airbags, Side airbags and belt pretensioners

③ Monitoring of the airbag restrain system

④ Indicate system readiness and faults to the drive by means of a fault warning lamp

⑤ Facilitate servicing capability via a serial diagnostic communication interface

Simpo PDF Merge and Split Unregistered Version - http://www.simpopdf.com

PA Airbag System

DAB (Driver Air Bag)

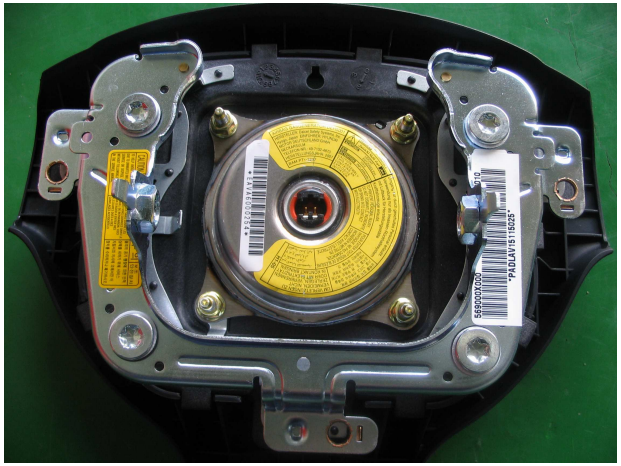

Resistance: 2 ±0.3Ω

All-fire current: 1.2A for 3ms.

No-fire current: single pulse of 0.4A for 10 sec

Cyclic test current: 100mA for continuous

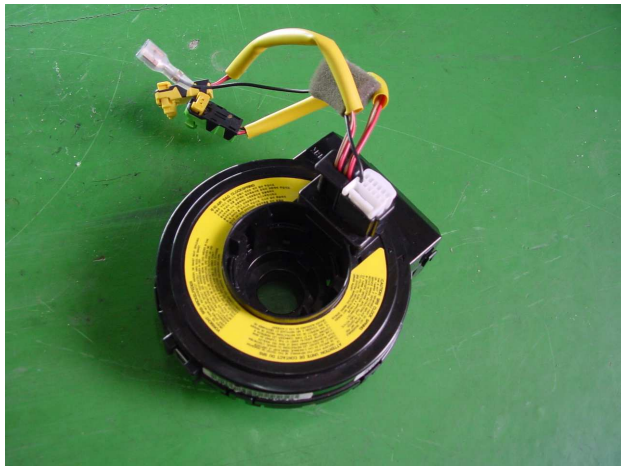

Simpo PDF Merge and Split Unregistered Version - http://www.simpopdf.com

PA Airbag System

PAB (Passenger Air Bag)

Resistance: 2 ±0.3Ω

All-fire current: 1.2A for 3ms.

No-fire current: single pulse of 0.4A for 10 sec

Cyclic test current: 100mA for continuous

Simpo PDF Merge and Split Unregistered Version - http://www.simpopdf.com

PA Airbag System

SPT (Seatbelt Pre Tensioner)

Resistance: 2 ±0.3Ω

All-fire current: 1.2A for 3ms.

No-fire current: single pulse of 0.4A for 10 sec

Cyclic test current: 100mA for continuous

Simpo PDF Merge and Split Unregistered Version - http://www.simpopdf.com

PAD (Passenger Airbag Deactivation) Switch – EUR Only

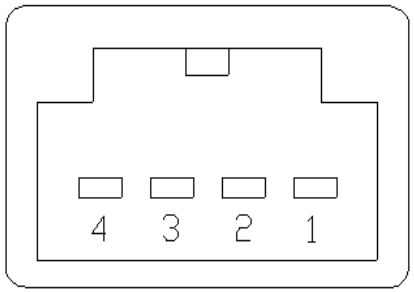

Pin No	Description
1	Ignition 1
2	Earth-Glove Box
3	Ground – ACU I/F
4	ACU Interface Line

Simpo PDF Merge and Split Unregistered Version - http://www.simpopdf.com

FIS (Front Impact Sensor) & SIS (Side Impact Sensor)

Name	HMC Number	Sensor	Figures
Side Impact Sensor	95920-0X000	100g, x-axis	
Front Impact Sensor	95930-0X000	250g, x-axis	

Simpo PDF Merge and Split Unregistered Version - http://www.simpopdf.com

Output

Airbag (SRS) Warning Lamp Operations

(Active fault or historical fault counter is greater or equal to 10)

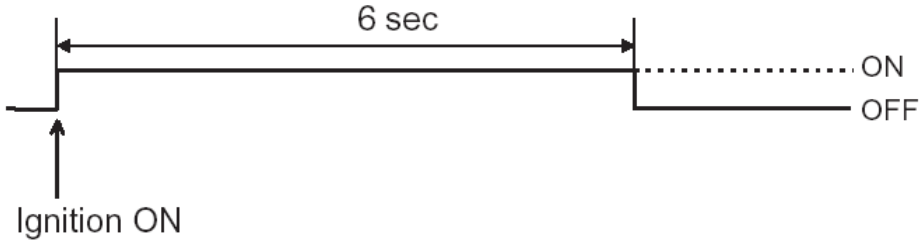

(Normal or historical fault counter is less than 10)

Simpo PDF Merge and Split Unregistered Version - http://www.simpopdf.com

PAD Indicator Operations

(PAD Lamp operation during Phase-up)

Simpo PDF Merge and Split Unregistered Version - http://www.simpopdf.com

Output

Crash Output

The required command mode implementation is high/low voltage level.

When the fire decision is made by ACU, crash output stays low voltage during 200ms like below.

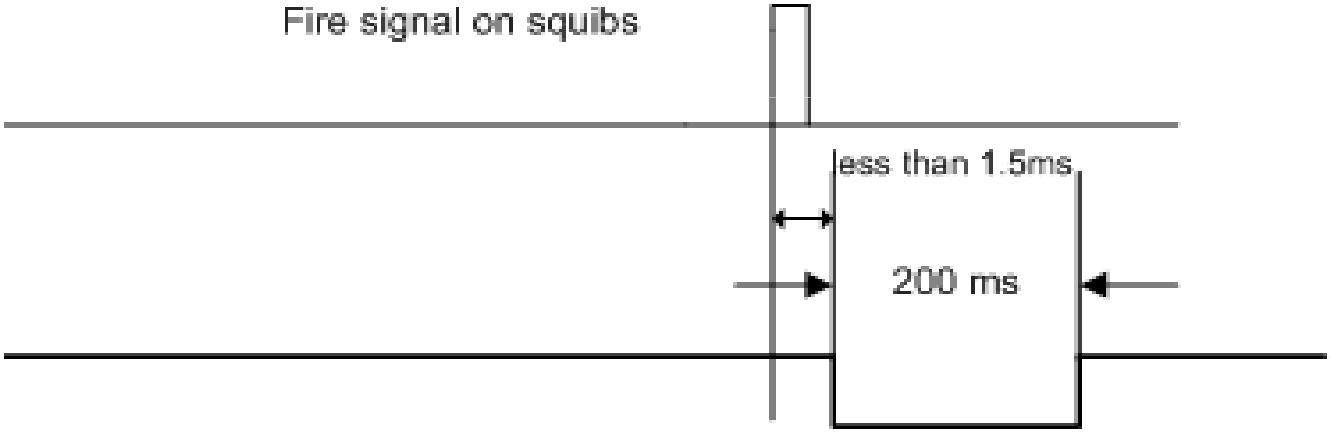

(Crash Output Signal)

Simpo PDF Merge and Split Unregistered Version - http://www.simpopdf.com

HI-SCAN diagnostic tree

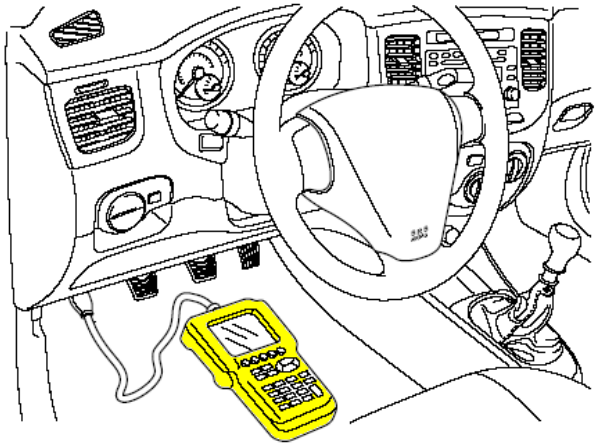

- Diagnostic Trouble Codes
  - Internal faults can´t be erased
- Crashing Information
  - Front Crash Information
    - Driver Crash Information
    - Side Crash Information
    - Passenger Crash Information
- Identification Check
- Passenger Airbag Realtime Info

Simpo PDF Merge and Split Unregistered Version - http://www.simpopdf.com

Diagnostic Troubleshooting Flow

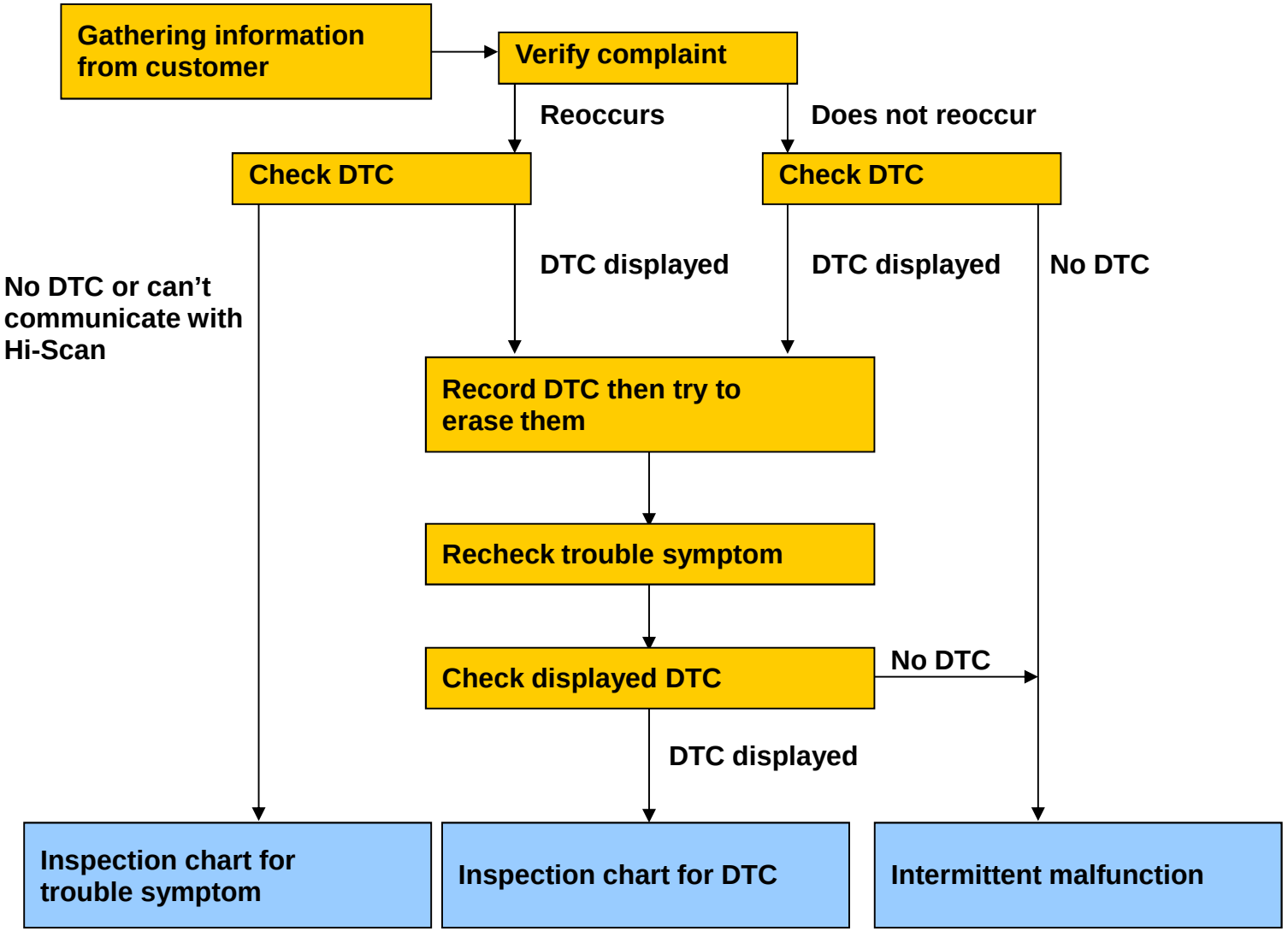

Simpo PDF Merge and Split Unregistered Version - http://www.simpopdf.com

Air conditioning

Copyright by Hyundai Motor Company. All rights reserved.

Simpo PDF Merge and Split Unregistered Version - http://www.simpopdf.com

General Information

Items	PA	
	Epsilon Engine	U(DSL) Engine
Compressor (Fixed Type Swash Plate)	HS-11	HS-09
Refrigerant/Oil quantity	450±25g	
Condenser	Sub-cool type (Condenser, Receiver Drier Integrated)	
Pressure Detecting	APT (Automotive Pressure Transducer)	
Cooling Fan Control	Resistor	
Blower speed control	Resistor	

Simpo PDF Merge and Split Unregistered Version - http://www.simpopdf.com

Components

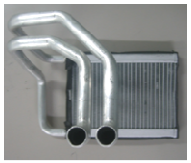

Heater Core

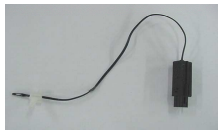

Thermistor

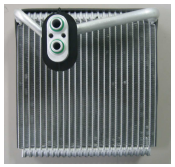

Evaporate Core

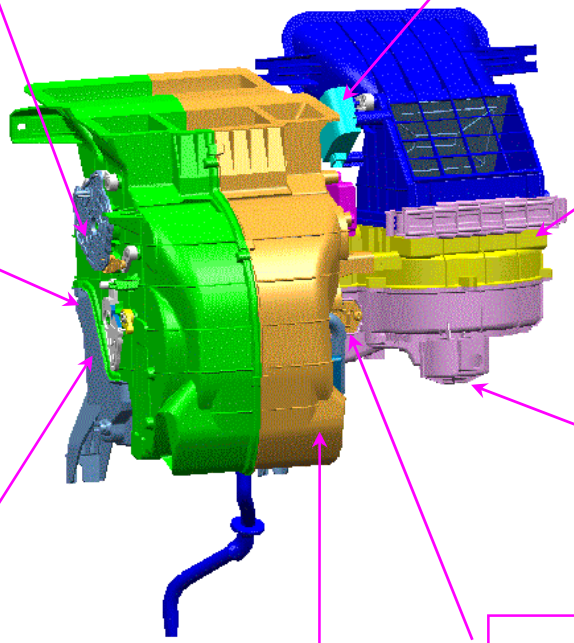

Inlet Actuator

Air Filter

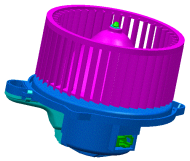

Blower Motor

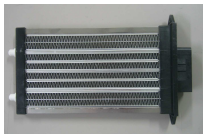

PTC Heater

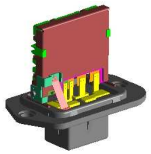

Resistor

Simpo PDF Merge and Split Unregistered Version - http://www.simpopdf.com

Heater Controller

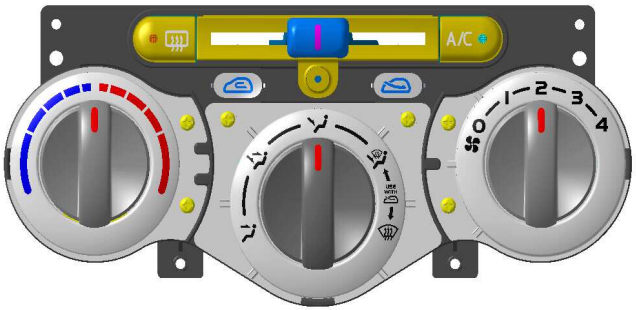

Type A (sliding)

Type B (3-Button)

Type C (5-Button)

Compressor

- **Epsilon Engine**
  HS - 11

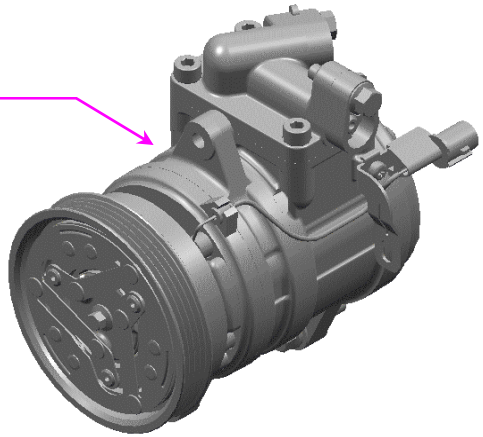

- **U(DSL) Engine**
  HS - 09

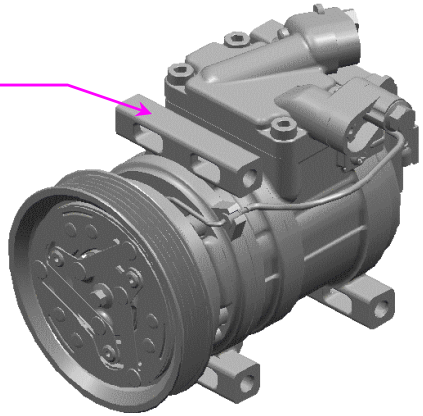

Simpo PDF Merge and Split Unregistered Version - http://www.simpopdf.com

Air Filter

1. Description

Employing combination filter, dust and odor in the air is effectively removed.

2. Life Time

Filter replacement period is 5,000 ~ 12,000km. But this can be shorten if the road condition is bad causing more dust and black smoke in the air.

3. How to replace

-. Remove the glove box.

-. Pull the locking part of the air filter cover

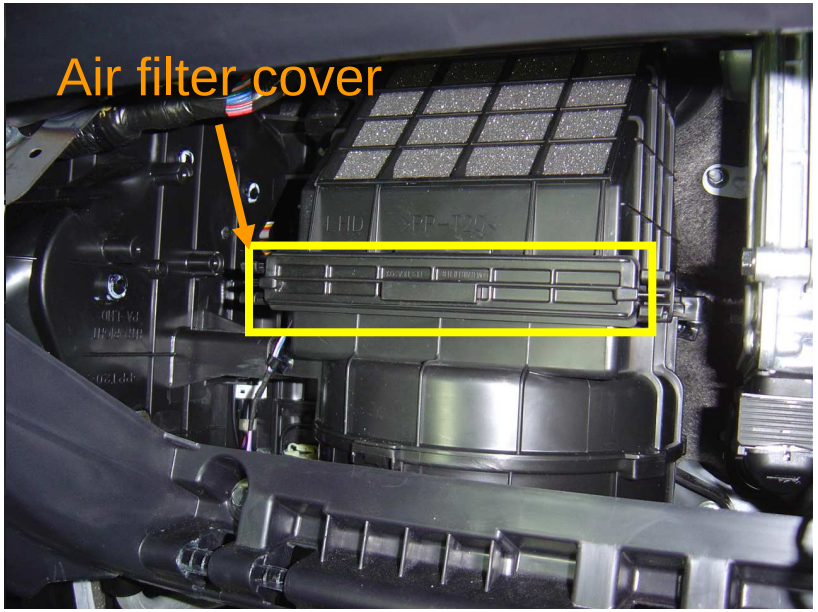

Simpo PDF Merge and Split Unregistered Version - http://www.simpopdf.com

Blower Speed Control

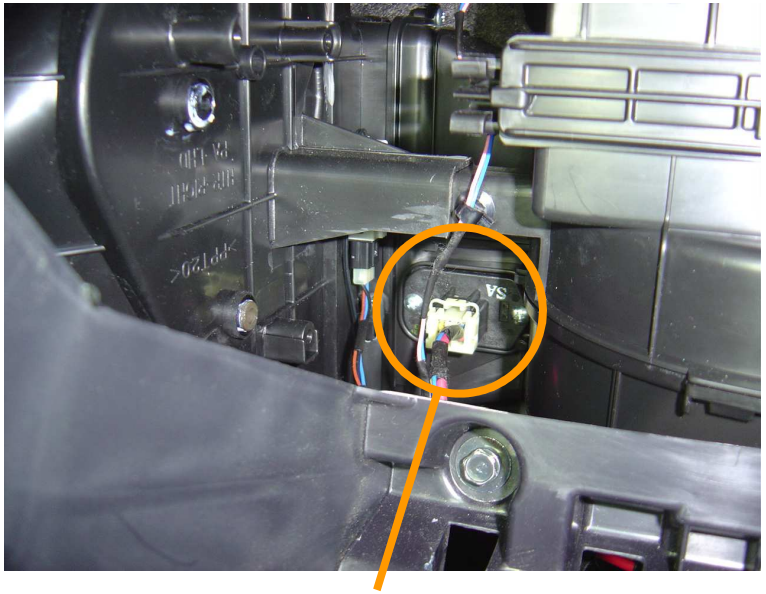

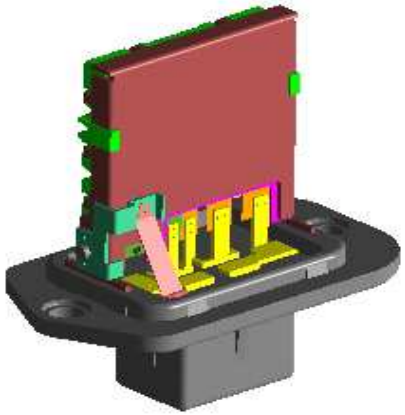

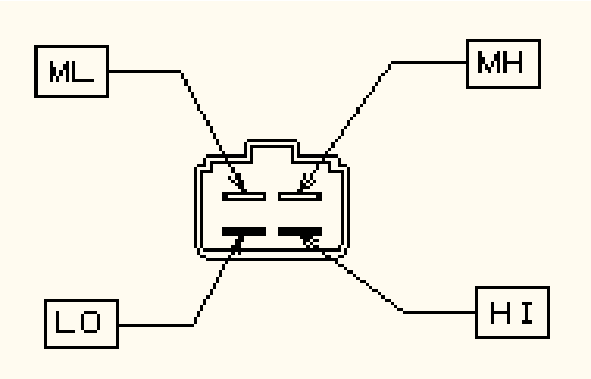

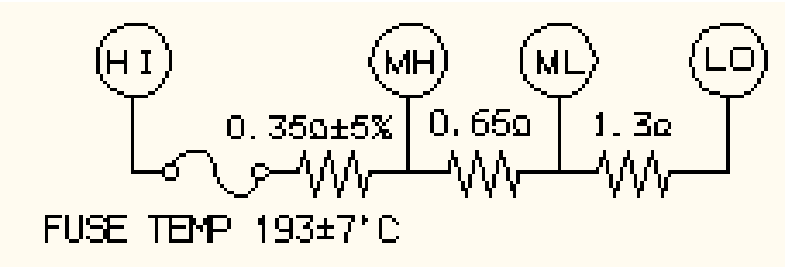

Simpo PDF Merge and Split Unregistered Version - http://www.simpopdf.com

Intake Actuator

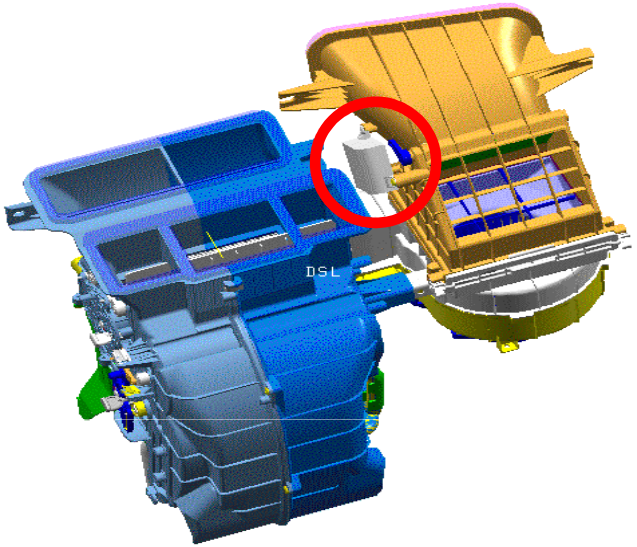

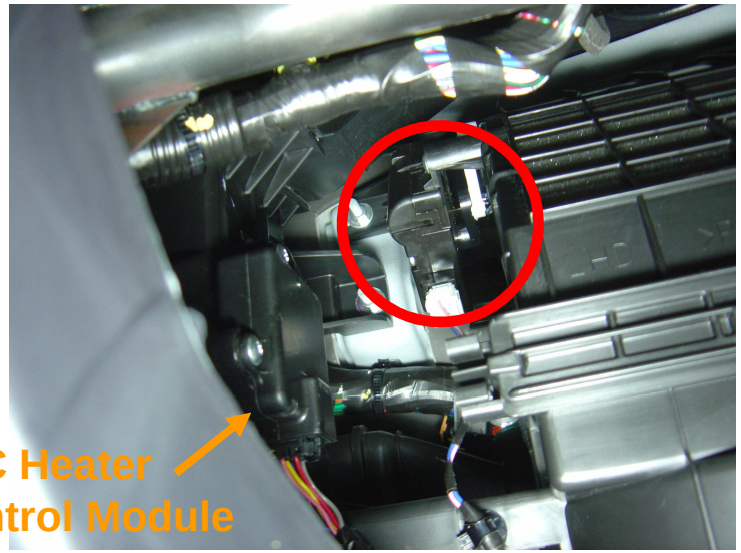

Circuit Diagram

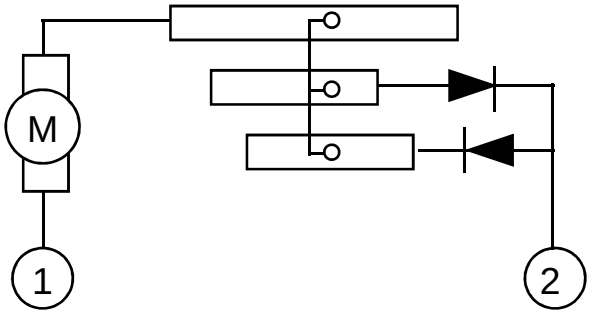

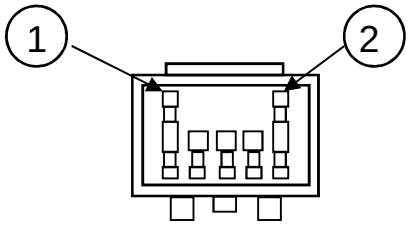

Terminal	1	2
Intake	FRE	REC

Simpo PDF Merge and Split Unregistered Version - http://www.simpopdf.com

Fin Sensor (Evaporator Temp. Sensor)

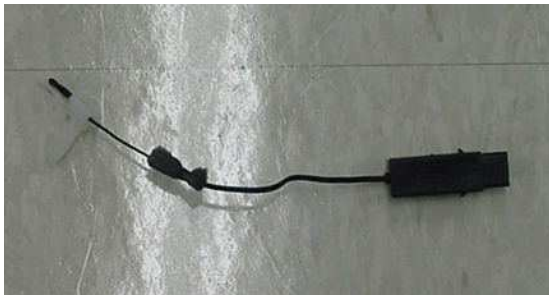

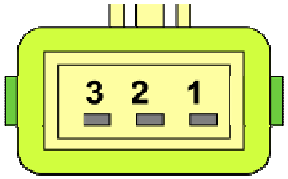

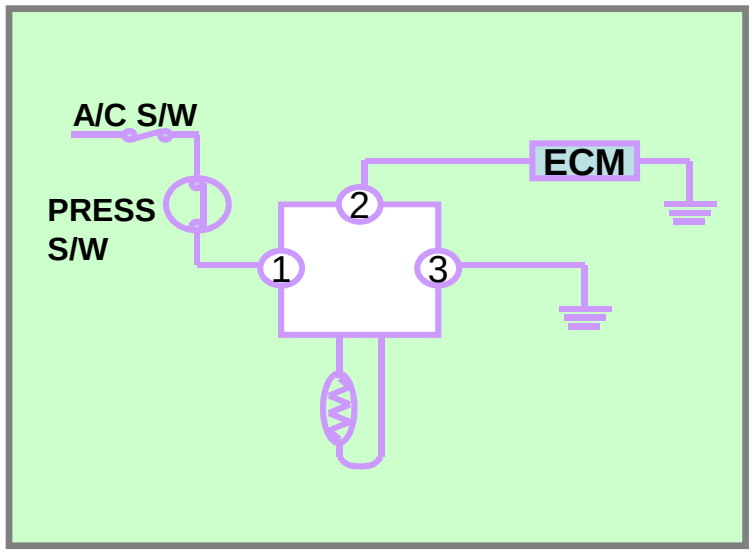

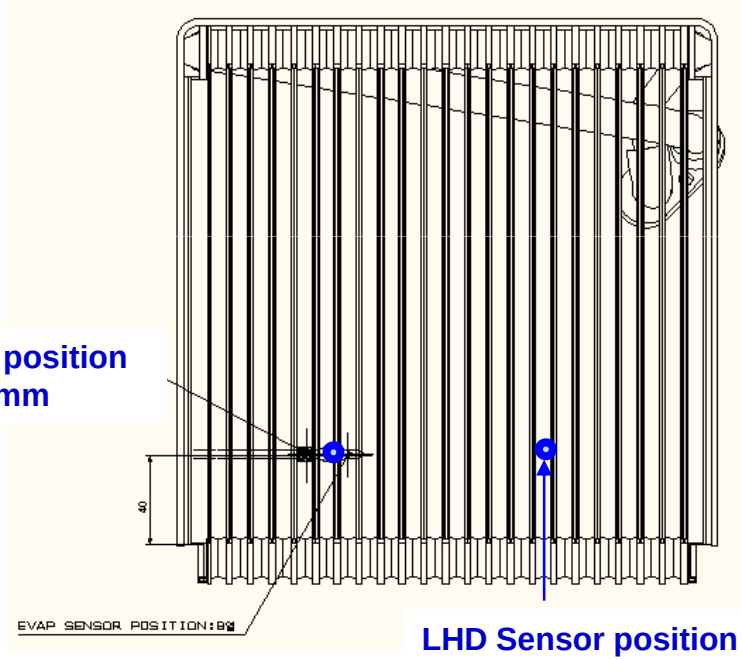

RHD Sensor position
: 8th row, 40mm

LHD Sensor position
: 8th row, 40mm

Simpo PDF Merge and Split Unregistered Version - http://www.simpopdf.com

APT Sensor (Automotive Pressure Transducer)

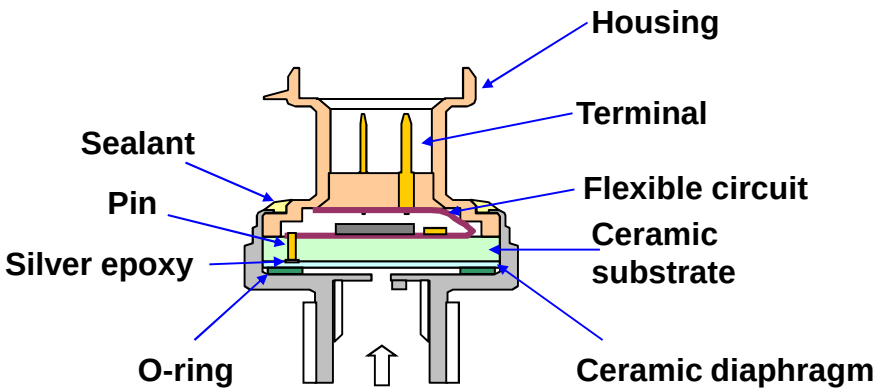

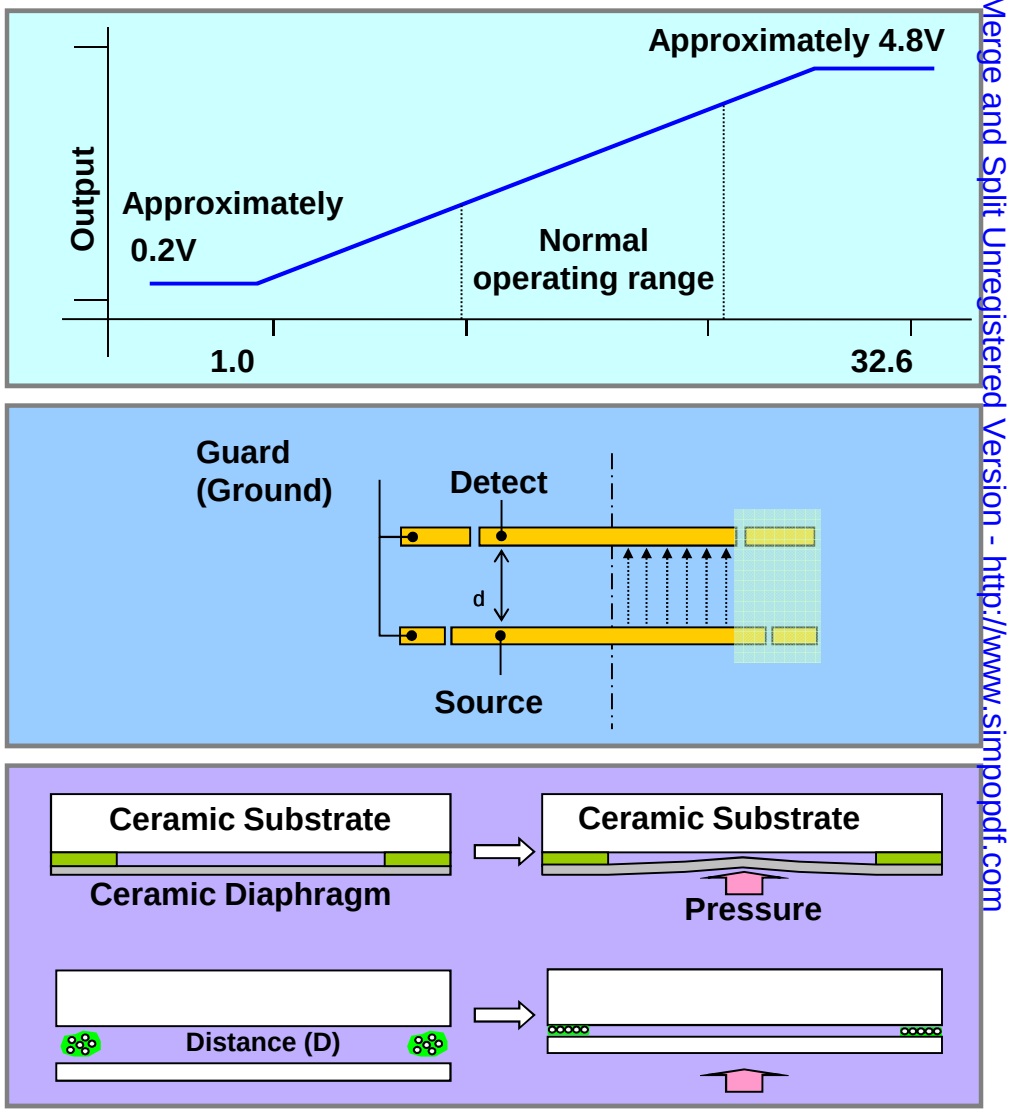

* The main function of APT sensor is detecting the refrigerant pressure (distance d).

Simpo PDF Merge and Split Unregistered Version - http://www.simpopdf.com

PTC (Positive Temperature Coefficient) Heater

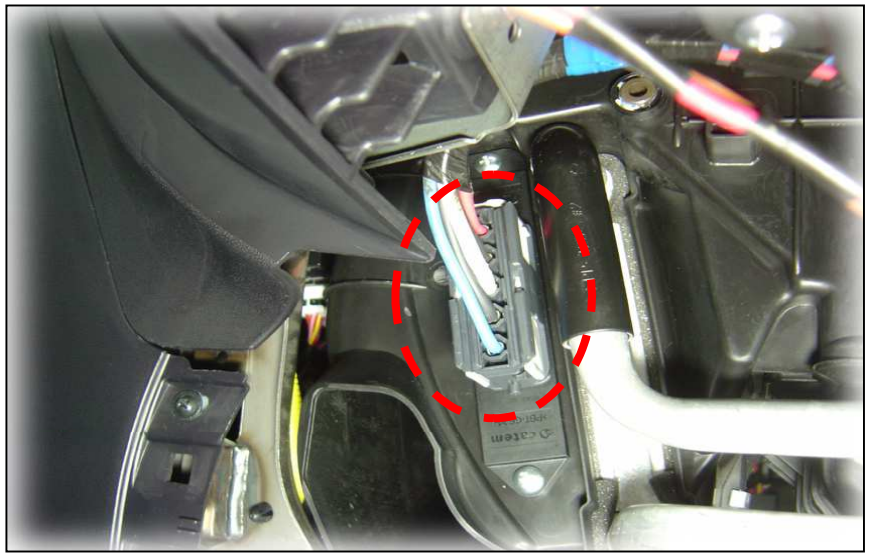

PTC Heater

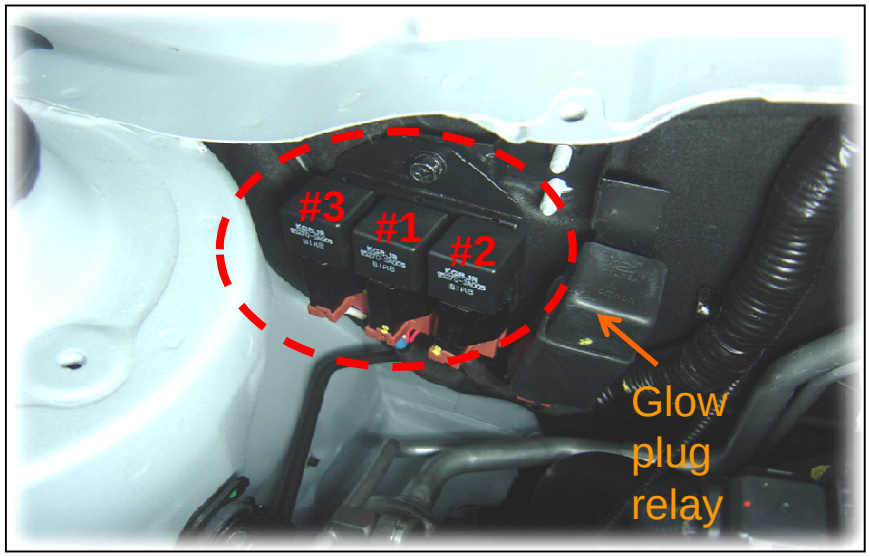

PTC Heater Relay

PTC Heater
Control Module

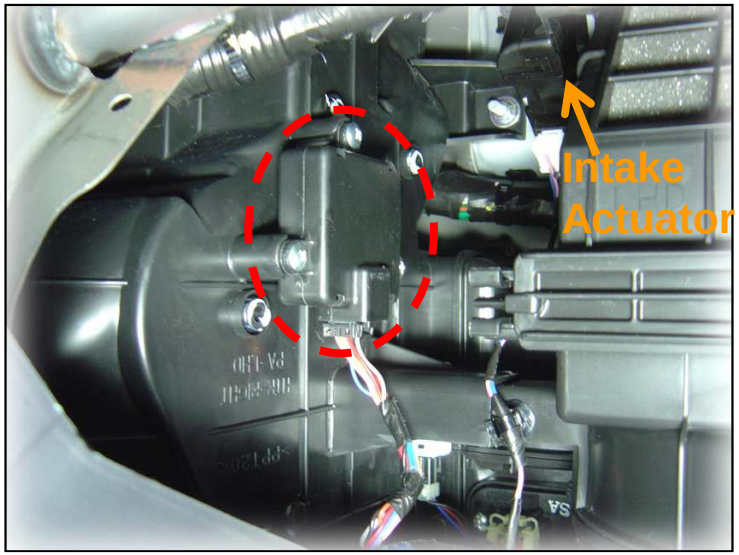

Simpo PDF Merge and Split Unregistered Version - http://www.simpopdf.com

PTC (Positive Temperature Coefficient) Heater

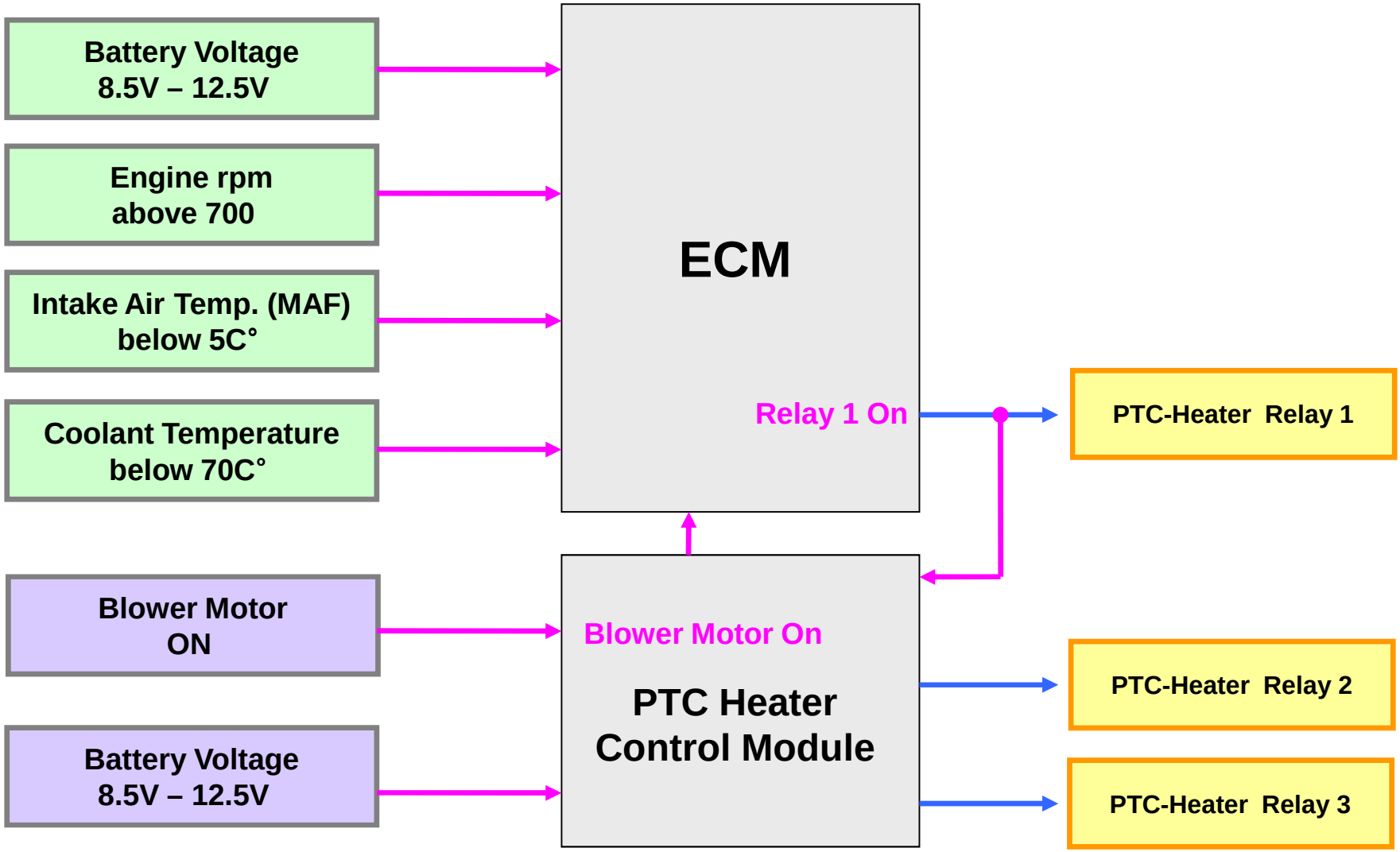

Simpo PDF Merge and Split Unregistered Version - http://www.simpopdf.com